IBM 42U 1100 mm Enterprise V2 Dynamic Rack and
42U Dynamic Expansion Rack

IBM PureFlex System 42U Rack and
42U Expansion Rack
Types 7953 and 9363

Installation Guide

IBM 42U 1100 mm Enterprise V2 Dynamic Rack and
42U Dynamic Expansion Rack

IBM PureFlex System 42U Rack and
42U Expansion Rack
Types 7953 and 9363

Installation Guide

Note: Before using this information and the product it supports, read the general information in Appendix B, “Notices,” on page 67, the *Rack Safety Information* and *Environmental Notices and User Guide* documents on the IBM *Documentation* CD, and the *Important Notices* and *Warranty Information* documents that comes with the product.

Fourth Edition (November 2012)

© Copyright IBM Corporation 2011, 2012.
US Government Users Restricted Rights – Use, duplication or disclosure restricted by GSA ADP Schedule Contract with IBM Corp.

Contents

Safety v

Chapter 1. Introduction 1
The IBM Documentation CD 1
Hardware and software requirements 1
Using the Documentation Browser 2
Notices and statements in this document 3

Chapter 2. Installing a rack cabinet 5
Size and weight specifications 10
Planning the floor layout 11
Removing and installing the outriggers (side stabilizers) 12
Installing the front stabilizer bracket, recirculation prevention plate (optional) and securing the rack to the floor surface 14
Removing and installing the side covers 23
Removing and installing a front door (9363-4PX and 9363-4EX only) 25
Removing and installing a front door (7953, 9363-4AX, and 9363-4BX only) 26
Removing and installing an IBM PureFlex Rack Door (9363-4CX and 9363-4DX only) 28
Removing and installing a rear door (all models) 30
Reversing a front door (9363-4PX and 9363-4EX only) 31
Attaching racks in a suite 38

Chapter 3. Installing optional devices 41
Installation guidelines 41
Installing devices on the rack-mounting flanges 44
Installing threaded rails 44
Installing cage nuts 44
Installing clip nuts 45
Installing devices vertically in the rack cabinet 46
Installing a 1U PDU or console switch vertically in the rack side area 46
Installing a 1U PDU or console switch vertically in a rack side pocket 47
Installing a 0U PDU vertically in the rear of a rack cabinet 48

Chapter 4. Managing cables 49
Front-to-rear cable channels 50
Using the cable-access bar in the bottom of the rack cabinet 51
Using the cable-access openings in the top of the rack 52
Mounting an overhead cable tray 53

Chapter 5. Moving a rack cabinet 55

Chapter 6. Parts listing 59

Appendix A. Getting help and technical assistance 63
Before you call 63
Using the documentation 64
Getting help and information from the World Wide Web 64
How to send Dynamic System Analysis data to IBM 64
Creating a personalized support web page 64
Software service and support 64
Hardware service and support 65
IBM Taiwan product service 65

© Copyright IBM Corp. 2011, 2012

Appendix B. Notices 67
Trademarks 67
Important notes. 68
Particulate contamination 69
Documentation format 69
Telecommunication regulatory statement 70
Electronic emission notices 70
Federal Communications Commission (FCC) statement 70
Industry Canada Class A emission compliance statement 70
Avis de conformité à la réglementation d'Industrie Canada 70
Australia and New Zealand Class A statement 71
European Union EMC Directive conformance statement 71
Germany Class A statement 71
VCCI Class A statement 72
Korea Communications Commission (KCC) statement 72
Russia Electromagnetic Interference (EMI) Class A statement. 72
People's Republic of China Class A electronic emission statement 73
Taiwan Class A compliance statement 73

Index 75

Safety

Before installing this product, read the Safety Information.

قبل تركيب هذا المنتج، يجب قراءة الملاحظات الآمنية

Antes de instalar este produto, leia as Informações de Segurança.

在安装本产品之前，请仔细阅读 Safety Information
(安全信息)。

安裝本產品之前，請先閱讀「安全資訊」。

Prije instalacije ovog produkta obavezno pročitajte Sigurnosne Upute.

Před instalací tohoto produktu si přečtěte příručku bezpečnostních instrukcí.

Læs sikkerhedsforskrifterne, før du installerer dette produkt.

Lees voordat u dit product installeert eerst de veiligheidsvoorschriften.

Ennen kuin asennat tämän tuotteen, lue turvaohjeet kohdasta Safety Information.

Avant d'installer ce produit, lisez les consignes de sécurité.

Vor der Installation dieses Produkts die Sicherheitshinweise lesen.

Πριν εγκαταστήσετε το προϊόν αυτό, διαβάστε τις πληροφορίες ασφάλειας
(safety information).

לפני שתתקינו מוצר זה, קראו את הוראות הבטיחות.

A termék telepítése előtt olvassa el a Biztonsági előírásokat!

Prima di installare questo prodotto, leggere le Informazioni sulla Sicurezza.

製品の設置の前に、安全情報をお読みください。

본 제품을 설치하기 전에 안전 정보를 읽으십시오.

Пред да се инсталира овој продукт, прочитајте информацијата за безбедност.

Les sikkerhetsinformasjonen (Safety Information) før du installerer dette produktet.

Przed zainstalowaniem tego produktu, należy zapoznać się
z książką "Informacje dotyczące bezpieczeństwa" (Safety Information).

Antes de instalar este produto, leia as Informações sobre Segurança.

Перед установкой продукта прочтите инструкции по
технике безопасности.

Pred inštaláciou tohto zariadenia si pečítaje Bezpečnostné predpisy.

Pred namestitvijo tega proizvoda preberite Varnostne informacije.

© Copyright IBM Corp. 2011, 2012

Antes de instalar este producto, lea la información de seguridad.

Läs säkerhetsinformationen innan du installerar den här produkten.

ཐོན་རྫས་འདི་བདེ་སྒྲིག་མ་བྱས་གོང་། ་སྔོན་གྱི་ཡིད་གཟབ་
བྱ་འདྲ་མིན་ཡོད་པའི་འོད་སྙེར་བལྟ་དགོས།

[illegible]

Youq mwngz yungh canjbinj neix gaxgonq, itdingh aeu doeg aen canjbinj soengq cungj vahgangj ancien siusik.

مەزكۇر مەھسۇلاتنى ئورنىتىشتىن بۇرۇن بىخەتەرلىك ئۇچۇرلىرىنى ئوقۇپ چىقىڭ.

Bu ürünü kurmadan önce güvenlik bilgilerini okuyun.

Important: Each caution and danger statement in this document is labeled with a number. This number is used to cross reference an English-language caution or danger statement with translated versions of the caution or danger statement in the *IBM Rack Safety Information* document.

For example, if a caution statement is labeled “Statement 1,” translations for that caution statement are in the *IBM Rack Safety Information* document under “Statement 1.”

Be sure to read all caution and danger statements in this document before you perform the procedures. Read any additional safety information that comes with the server or optional device before you install the device.

Statement 1:

CAUTION:
To ensure safety, all applicable components of the rack cabinet must be certified by a nationally recognized testing laboratory in order to verify compliance with country-specific safety regulations. This process ensures that the end product remains safe for the operator and service personnel under normal and forseeable misuse conditions.

Statement 2:

DANGER

- **Always lower the leveling pads on the rack cabinet.**
- **Always install stabilizer brackets on the rack cabinet.**
- **Always install servers and optional devices starting from the bottom of the rack cabinet.**
- **Always install the heaviest devices in the bottom of the rack cabinet.**

Statement 4:

DANGER

Electrical current from power, telephone, and communication cables is hazardous.

To avoid a shock hazard:

- **Do not connect or disconnect any cables or perform installation, maintenance, or reconfiguration of this product during an electrical storm.**
- **Connect all power cords to a properly wired and grounded electrical outlet.**
- **Connect to properly wired outlets any equipment that will be attached to this product.**
- **When possible, use one hand only to connect or disconnect signal cables.**
- **Never turn on any equipment when there is evidence of fire, water, or structural damage.**
- **Disconnect the attached power cords, telecommunications systems, networks, and modems before you open the device covers, unless instructed otherwise in the installation and configuration procedures.**
- **Connect and disconnect cables as described in the following table when installing, moving, or opening covers on this product or attached devices.**

To Connect:	**To Disconnect:**
1. Turn everything OFF.	1. Turn everything OFF.
2. First, attach all cables to devices.	2. First, remove power cords from outlet.
3. Attach signal cables to connectors.	3. Remove signal cables from connectors.
4. Attach power cords to outlet.	4. Remove all cables from devices.
5. Turn device ON.	

Statement 5:

≥ 18 kg (39.7 lb)

≥ 32 kg (70.5 lb)

≥ 55 kg (121.2 lb)

CAUTION:
Use safe practices when lifting.

Statement 6:

CAUTION:
Do not place any object on top of a rack-mounted device unless that rack-mounted device is intended for use as a shelf.

Statement 8:

DANGER

- **Plug power cords from devices in the rack cabinet into electrical outlets that are located near the rack cabinet and are easily accessible.**
- **Each rack cabinet might have more than one power cord. Be sure to disconnect all power cords in the rack cabinet before servicing any device in the rack cabinet.**
- **Install an emergency-power-off switch if more than one power device (power distribution unit or uninterruptible power supply) is installed in the same rack cabinet.**
- **Connect all devices installed in a rack cabinet to power devices installed in the same rack cabinet. Do not plug a power cord from a device installed in one rack cabinet into a power device installed in a different rack cabinet.**

Statement 11:

CAUTION:
Removing components from the upper positions in the rack cabinet improves rack stability during relocation. Follow these general guidelines whenever you relocate a populated rack cabinet within a room or building:

- **Reduce the weight of the rack cabinet by removing equipment starting at the top of the rack cabinet. When possible, restore the rack cabinet to the configuration of the rack cabinet as you received it. If this configuration is not known, you must do the following:**
  - **Remove all devices in the 22U position and above.**
  - **Ensure that the heaviest devices are installed in the bottom of the rack cabinet.**
  - **Ensure that there are no empty U-levels between devices installed in the rack cabinet below the 22U level.**
- **If the rack cabinet you are relocating is part of a suite of rack cabinets, detach the rack cabinet from the suite.**
- **Inspect the route that you plan to take to eliminate potential hazards.**
- **Verify that the route that you choose can support the weight of the loaded rack cabinet. Refer to the documentation that comes with your rack cabinet for the weight of a loaded rack cabinet.**
- **Verify that all door openings are at least 760 x 2083 mm (30 x 82 in.)**
- **Ensure that all devices, shelves, drawers, doors, and cables are secure.**
- **Ensure that the four leveling pads are raised to their highest position.**
- **Ensure that there is no stabilizer bracket installed on the rack cabinet.**
- **Do not use a ramp inclined at more than ten degrees.**
- **Once the rack cabinet is in the new location, do the following:**
  - **Lower the four leveling pads.**
  - **Install stabilizer brackets on the rack cabinet.**
  - **If you removed any devices from the rack cabinet, repopulate the rack cabinet from the lowest position to the highest position.**

If a long distance relocation is required, restore the rack cabinet to the configuration of the rack cabinet as you received it. Pack the rack cabinet in the original packaging material, or equivalent. Also, lower the leveling pads to raise the casters off of the pallet and strap the rack cabinet to the pallet.

Statement 12:

CAUTION:
See the instructions in the rack documentation before you install devices, remove devices, or relocate the rack.

Statement 13:

CAUTION:
The weight of this part or unit is more than 55 kg (121.2 lb). It takes specially trained persons, a lifting device, or both to safely lift this part or unit.

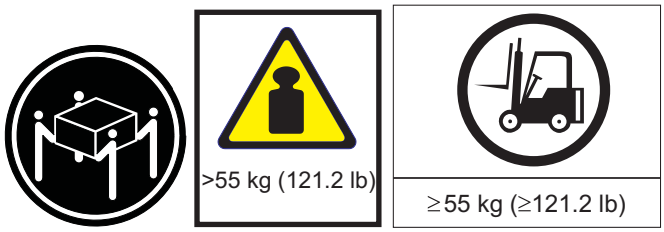

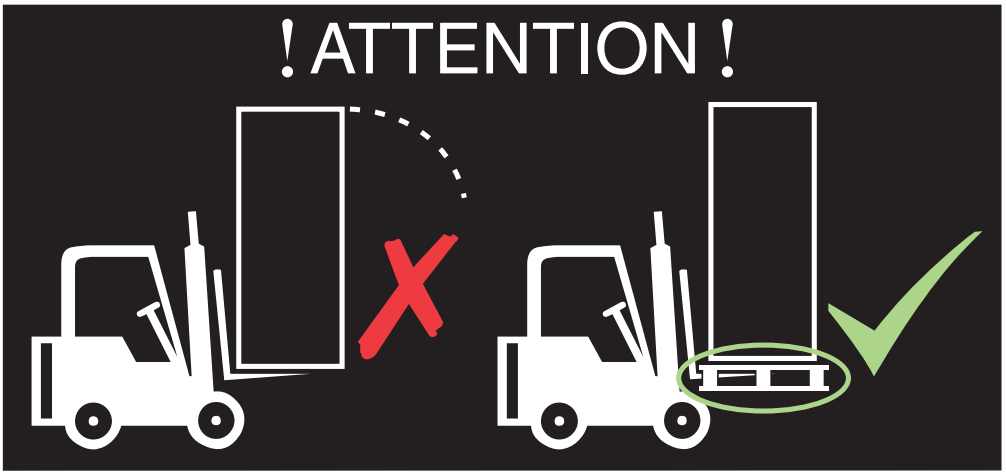

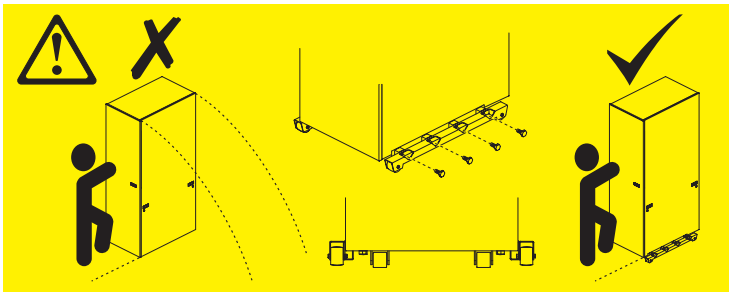

Note: If required by local building codes, each stand-alone rack can be bolted to the floor with a fastener in each corner.

Chapter 1. Introduction

This document contains general installation instructions for installing the following rack cabinets. Always read the documentation that comes with your server or optional device for detailed installation instructions.

- IBM® 42U 1100 mm Enterprise V2 Dynamic Rack, Type 9363-4PX
- IBM 42U 1100 mm Enterprise V2 Dynamic Expansions Rack, Type 9363-4EX
- IBM PureFlex System 42U Rack, Type 7953 and 9363-4AX
- IBM PureFlex System 42U Expansion Rack, Type 7953 and 9363-4BX

Installing the rack cabinet consists of the following tasks:

1. Unpack the rack according to the *IBM 42U 1100 mm Enterprise V2 Dynamic Rack and Expansion Rack Unpacking Instructions* document that comes with the rack cabinet.
2. Install the rack stabilizer brackets on all rack cabinets.
3. Prepare the rack for optional devices:
   - Remove the side covers, if applicable.
   - Remove the front and rear doors from all racks, if necessary.
   - Attach expansion racks to a standard rack or to each other to form suites.
4. Install one or more optional devices.

   Note: Install the heaviest devices in the bottom of the rack cabinet.
5. Complete the rack cabinet installation:
   - Reinstall side covers on all racks or on the outermost racks in a suite.
   - Reinstall front and rear doors on all racks.

If documentation updates are available, you can download them from the IBM website. The rack cabinet might have features that are not described in the documentation that comes with the rack, and the documentation might be updated occasionally to include information about those features, or technical updates might be available to provide additional information that is not included in the rack documentation. To check for updates, go to http://www.ibm.com/supportportal/.

Note: Changes are made periodically to the IBM website. Procedures for locating documentation might vary slightly from what is described in this document.

For more information about rack cabinets and options, see http://www.ibm.com/systems/xbc/cog/rackcabinetsoptions/rackcabinetsoptions.html.

The IBM Documentation CD

The IBM *Documentation* CD contains documentation for the rack cabinet in Portable Document Format (PDF) and includes the IBM Documentation Browser to help you find information quickly.

Hardware and software requirements

The IBM *Documentation* CD requires the following minimum hardware and software:

- Microsoft Windows XP, Windows 2000, or Red Hat Linux
- 100 MHz microprocessor

© Copyright IBM Corp. 2011, 2012

- 32 MB of RAM
- Adobe Acrobat Reader 3.0 (or later) or xpdf, which comes with Linux operating systems

Using the Documentation Browser

Use the Documentation Browser to browse the contents of the CD, read brief descriptions of the documents, and view documents, using Adobe Acrobat Reader or xpdf. The Documentation Browser automatically detects the regional settings in your computer and displays the documents in the language for that region (if available). If a document is not available in the language for that region, the English-language version is displayed.

Use one of the following procedures to start the Documentation Browser:

- If Autostart is enabled, insert the CD into the CD or DVD drive. The Documentation Browser starts automatically.
- If Autostart is disabled or is not enabled for all users, use one of the following procedures:
  - If you are using a Windows operating system, insert the CD into the CD or DVD drive and click **Start --> Run**. In the **Open** field, type

    ```
    e:\win32.bat
    ```

    where *e* is the drive letter of the CD or DVD drive, and click **OK**.
  - If you are using Red Hat Linux, insert the CD into the CD or DVD drive; then, run the following command from the /mnt/cdrom directory:

    ```
    sh runlinux.sh
    ```

Select the rack cabinet from the **Product** menu. The **Available Topics** list displays all the documents for the rack. Some documents might be in folders. A plus sign (+) indicates each folder or document that has additional documents under it. Click the plus sign to display the additional documents.

When you select a document, a description of the document is displayed under **Topic Description**. To select more than one document, press and hold the Ctrl key while you select the documents. Click **View Book** to view the selected document or documents in Acrobat Reader or xpdf. If you selected more than one document, all the selected documents are opened in Acrobat Reader or xpdf.

To search all the documents, type a word or word string in the **Search** field and click **Search**. The documents in which the word or word string appears are listed in order of the most occurrences. Click a document to view it, and press Crtl+F to use the Acrobat search function, or press Alt+F to use the xpdf search function within the document.

Click **Help** for detailed information about using the Documentation Browser.

Notices and statements in this document

The caution and danger statements in this document are also in the multilingual *Rack Safety Information* document that comes with the rack cabinet. Each statement is numbered for reference to the corresponding statement in your language in the *Rack Safety Information* document.

The following notices and statements are used in this document:

- **Note:** These notices provide important tips, guidance, or advice.
- **Important:** These notices provide information or advice that might help you avoid inconvenient or problem situations.
- **Attention:** These notices indicate potential damage to programs, devices, or data. An attention notice is placed just before the instruction or situation in which damage might occur.
- **Caution:** These statements indicate situations that can be potentially hazardous to you. A caution statement is placed just before the description of a potentially hazardous procedure step or situation.
- **Danger:** These statements indicate situations that can be potentially lethal or extremely hazardous to you. A danger statement is placed just before the description of a potentially lethal or extremely hazardous procedure step or situation.

Chapter 2. Installing a rack cabinet

The standard and expansion rack cabinets are 42U-high[1] racks. The standard rack cabinet comes with side covers installed. The expansion rack cabinet does not come with side covers but includes the required hardware for building a suite of racks. You need one standard rack cabinet per suite.

Notes:

1. If required by local building codes, each stand-alone rack can be bolted to the floor with a fastener in each corner.
2. The illustrations in this document might differ slightly from your hardware.

Statement 1:

CAUTION:
To ensure safety, all applicable components of the rack cabinet must be certified by a nationally recognized testing laboratory in order to verify compliance with country-specific safety regulations. This process ensures that the end product remains safe for the operator and service personnel under normal and forseeable misuse conditions.

1. One U is equal to 4.45 cm (1.75 in.)

© Copyright IBM Corp. 2011, 2012

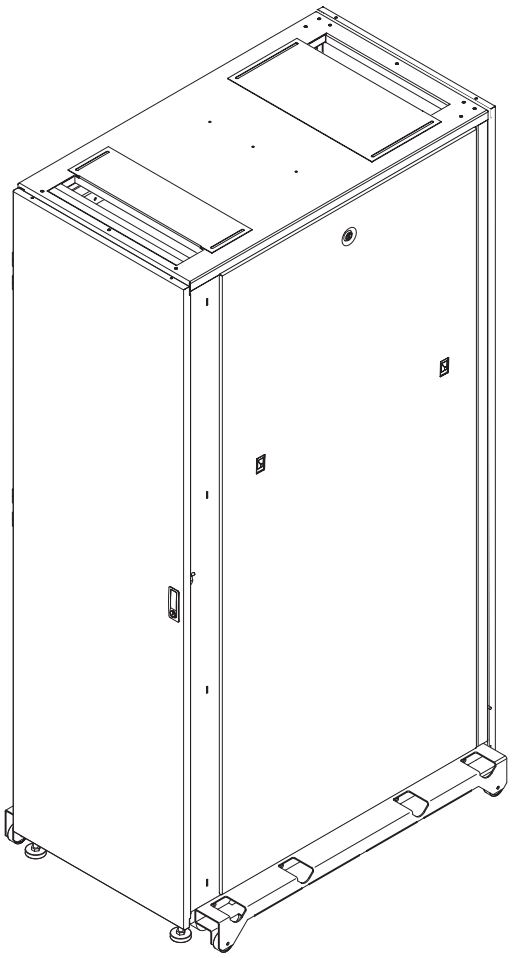

Figure 1. IBM 42U 1100 mm Enterprise V2 Dynamic Rack, Type 9363-4PX

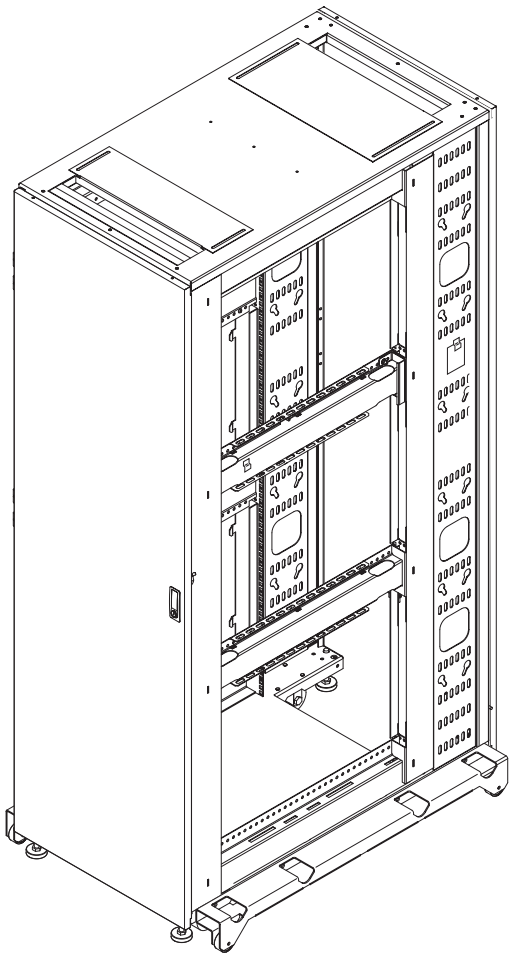

Figure 2. IBM 42U 1100 mm Enterprise V2 Dynamic Expansion Rack, Type 9363-4EX (comes without side covers)

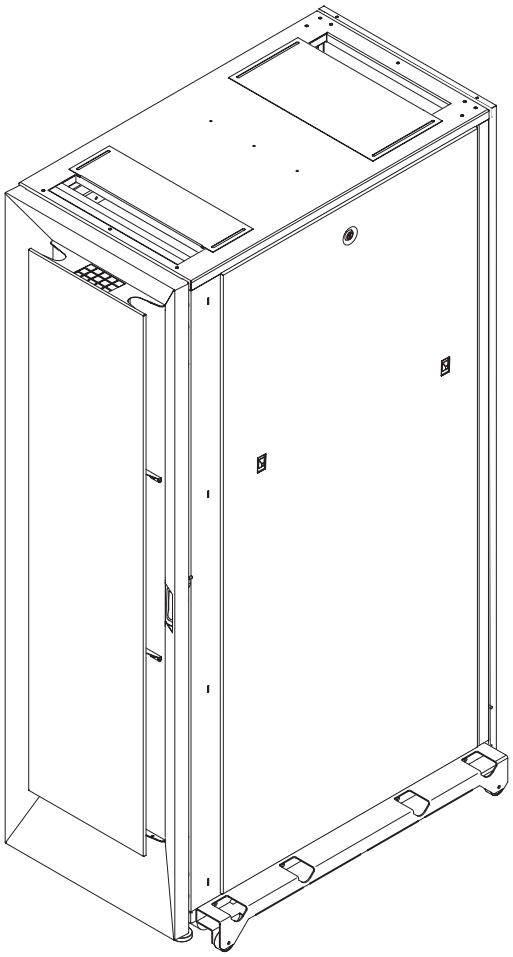

Figure 3. IBM PureFlex System 42U Rack, Type 7953 and 9363-4AX

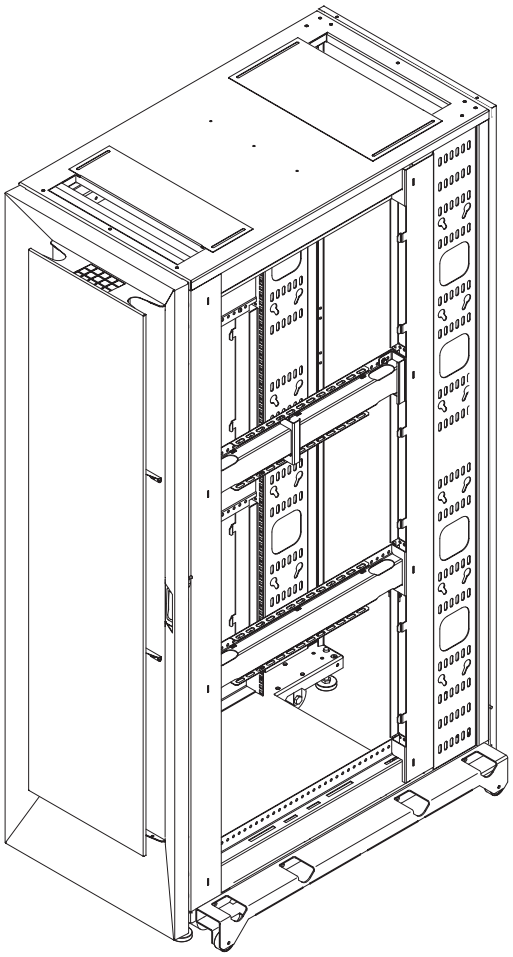

Figure 4. IBM PureFlex System 42U Expansion Rack, Type 7953 and 9363-4BX (comes without side covers)

Size and weight specifications

The 42U racks and 42U expansion racks conform to the Electronic Industries Association (EIA) standard *EIA-310-D Cabinets, Racks, Panels, and Associated Equipment (1992)*. For the rack cabinet dimensions and weights, see the following tables.

Table 1. 42U rack physical dimensions

Configuration	Dimensions
9363-4PX IBM 42U 1100 mm Enterprise V2 Dynamic Rack without outriggers	2009 mm x 604 mm[1] x 1100 mm (79.1 in. x 23.8 in. x 43.3 in.)
9363-4PX IBM 42U 1100 mm Enterprise V2 Dynamic Rack with outriggers	2009 mm x 780 mm x 1100 mm (79.1 in. x 30.7 in. x 43.3 in.)
9363-4EX IBM 42U 1100 mm Enterprise V2 Dynamic Expansion Rack without outriggers	2009 mm x 600 mm x 1100 mm (79.1 in. x 23.6 in. x 43.3 in.)
9363-4EX IBM 42U 1100 mm Enterprise V2 Dynamic Expansion Rack with outriggers	2009 mm x 780 mm x 1100 mm (79.1 in. x 30.7 in. x 43.3 in.)
7953 and 9363-4AX IBM PureFlex System 42U Rack without outriggers	2009 mm x 604 mm[1] x 1177 mm (79.1 in. x 23.8 in. x 46.3 in.)
7953 and 9363-4AX IBM PureFlex System 42U Rack with outriggers	2009 mm x 780 mm x 1177 mm (79.1 in. x 30.7 in. x 46.3 in.)
7953 and 9363-4BX IBM PureFlex System 42U Expansion Rack without outriggers	2009 mm x 600 mm x 1177 mm (79.1 in. x 23.6 in. x 46.3 in.)
7953 and 9363-4BX IBM PureFlex System 42U Expansion Rack with outriggers	2009 mm x 780 mm x 1177 mm (79.1 in. x 30.7 in. x 46.3 in.)
[1]Includes side cover latches. When the side covers are removed, the rack width is 600 mm (23.6 in.).	

Table 2. 42U 1100 mm Enterprise V2 Dynamic Rack and Expansion Rack weights

	9363-4PX 42U dynamic rack	9363-4EX 42U dynamic expansion rack
Empty (with outriggers)	169 kg (372 lb)	132 kg (292 lb)
Total load	953 kg (2100 lb)	953 kg (2100 lb)
Maximum configuration	1121 kg (2472 lb)	1085 kg (2392 lb)

Table 3. IBM PureFlex System 42U Rack and Expansion Rack weights

Model	Description	Approximate weight
7953 and 9363-4AX	With side panels, with outriggers	179 kg (394 lb)
7953 and 9363-4AX	With side panels, without outriggers	167 kg (367 lb)
7953 and 9363-4BX	Without side panels, with outriggers	142 kg (314 lb)
7953 and 9363-4BX	Without side panels, without outriggers	130 kg (287 lb)

Planning the floor layout

For planning purposes, use the floor layout that is shown in the following illustration as a guide for cutting holes in the floor tiles to run cables for the devices in the rack cabinet.

The circles in the illustration represent the area where the casters and leveling feet might touch the ground. Make sure that there are no holes in the floor tiles that are too close to these circles.

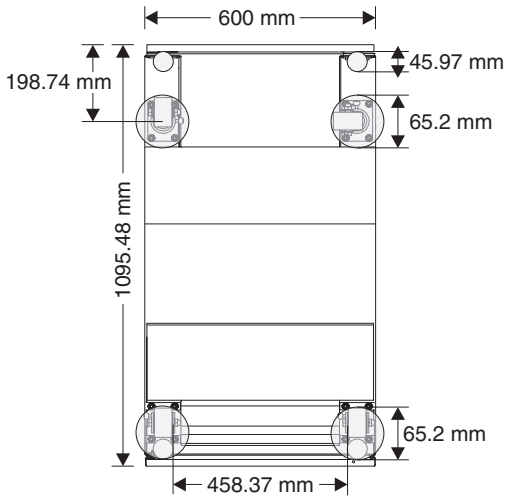

Figure 5. Floor layout for cutting holes in the floor tiles

Removing and installing the outriggers (side stabilizers)

The outriggers are the stabilizers with wheels that are installed on the sides of the rack cabinet. After the rack is in its final location and will not be moved more than 2 m (6 ft), you can remove the outriggers.

DANGER:

Always relocate the rack cabinet with the outriggers installed. Keep the outriggers and install them if you have to move the rack to another location in the future.

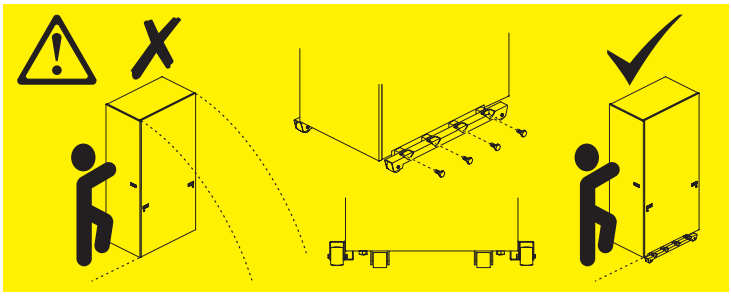

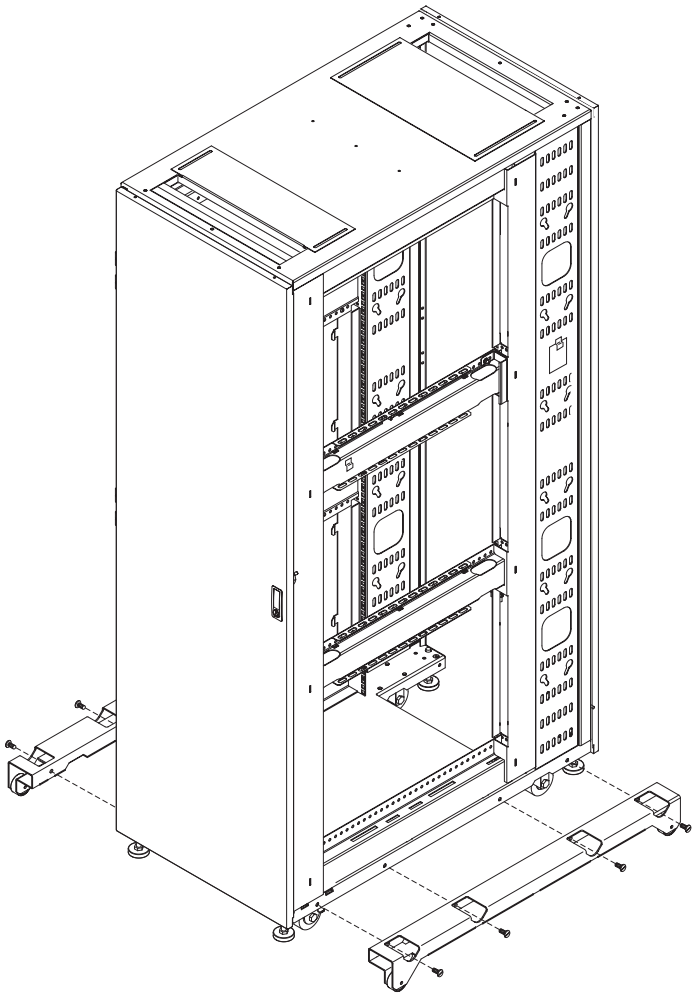

Figure 6. Removing and installing the outriggers

To remove the outriggers, use the 6 mm hex wrench that comes in the hardware kit to remove the four bolts that attach each outrigger to the rack cabinet. Keep the outriggers and bolts for future use if you have to move the rack.

Notes:

1. Before you attach an expansion rack to a standard rack or another expansion rack, you must remove the outriggers from the racks so that the racks fit together correctly.
2. You can install or remove the outriggers on a rack cabinet with or without side covers.

Install the outriggers before you move the rack cabinet to another location. Use the 6 mm hex wrench that comes in the hardware kit to install the four bolts that attach each outrigger to the rack cabinet.

Installing the front stabilizer bracket, recirculation prevention plate (optional) and securing the rack to the floor surface

See the unpacking instructions that come with the rack cabinet for information about how to unpack and locate the rack.

Statement 2:

DANGER

- **Always lower the leveling pads on the rack cabinet.**
- **Always install stabilizer brackets on the rack cabinet.**
- **Always install servers and optional devices starting from the bottom of the rack cabinet.**
- **Always install the heaviest devices in the bottom of the rack cabinet.**

The procedure in this section describes the following tasks:

- Lowering the leveling pads
- Installing the recirculation prevention plate (optional)
- Installing the front stabilizer bracket
- Bolting the rack cabinet to the floor surface for added stability

To install the recirculation prevention plate, front stabilizer bracket, and to bolt the rack to the floor surface, complete the following steps:

1. Use the open-end wrench that comes with the hardware kit to lower each of the four leveling pads just enough so that they touch the floor. The rack casters support the weight of the rack cabinet. The pads prevent the rack from rolling.

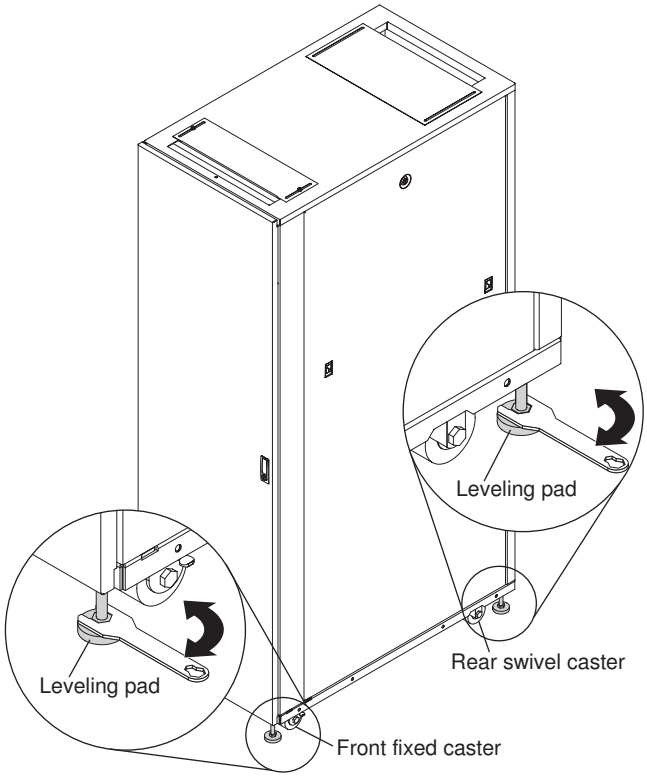

Figure 7. Lowering the leveling pads

2. Hand-tighten the thumbscrews on the front fixed casters.

3. Remove both outriggers from the sides of the rack by removing the four bolts on each side with a 6 mm hex wrench. Save the outriggers for use in the future if you have to move the rack cabinet to another location.

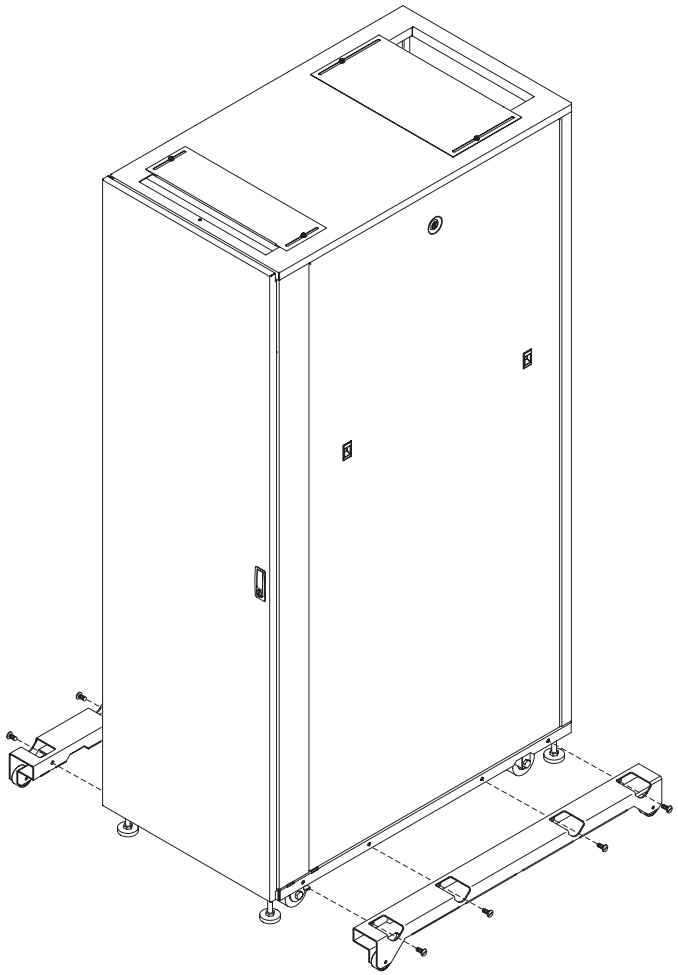

Figure 8. Removing the outriggers

4. Remove the front door if you are installing the recirculation prevention plate or front stabilizer bracket. For more information about removing the front door, see the following sections:
   - "Removing and installing a front door (9363-4PX and 9363-4EX only)" on page 25
   - "Removing and installing a front door (7953, 9363-4AX, and 9363-4BX only)" on page 26
   - "Removing and installing an IBM PureFlex Rack Door (9363-4CX and 9363-4DX only)" on page 28

5. (Optional) **For a stand-alone IBM PureFlex System rack, type 9363-4CX rack cabinet):** Align the front stabilizer plate with the bottom of the rack front and secure the stabilizer plate to the rack frame with four long screws.

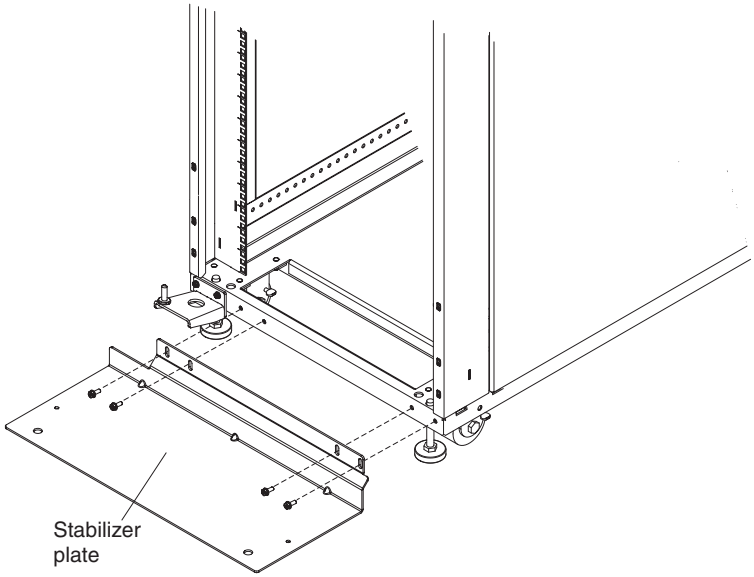

Figure 9. Installing the front stabilizer plate (types 9363-4CX and 9363-4DX only)

6. (Optional) **For the IBM PureFlex System rack, types 9363-4CX and 9363-4DX rack cabinet):**

   If this is not a stand-alone rack and you are not installing the front stabilizer plate, install the air baffle to prevent air recirculation. Align the air baffle with the bottom of the rack front and secure the air baffle to the rack frame with four long screws.

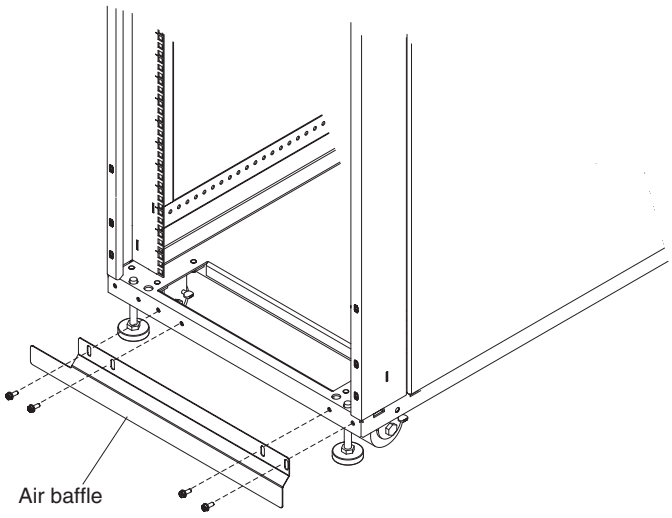

Figure 10. Installing the air baffle (types 9363-4CX and 9363-4DX only)

7. (Optional) **For rack cabinet types 7953, 9363-4PX, 9363-4EX, 9363-4AX, and 9363-4BX):**

   If this is not a stand-alone rack and you are not installing the front stabilizer bracket, attach the recirculation prevention plate with the four screws and hex wrench from the hardware kit.

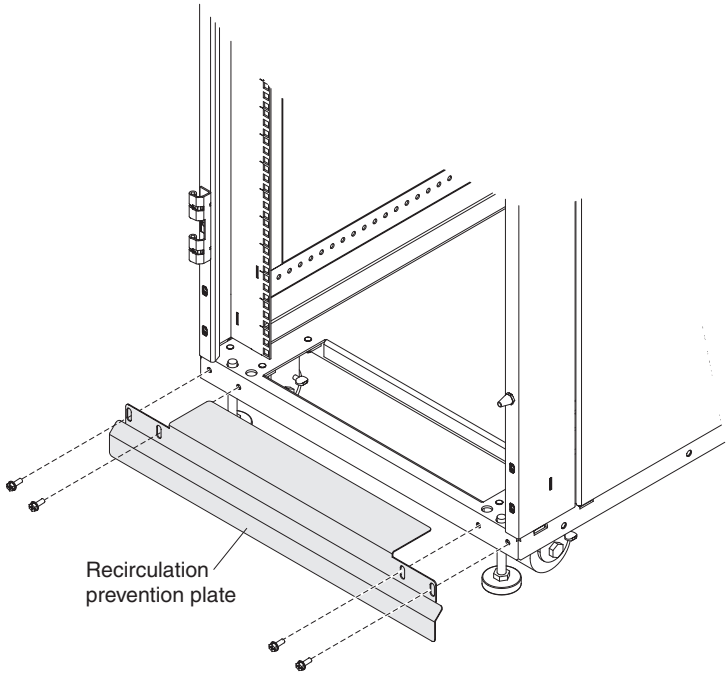

Figure 11. Installing the recirculation prevention plate and no front stabilizer bracket

For a stand-alone rack cabinet, types 7953, 9363-4PX, 9363-4EX, 9363-4AX, and 9363-4BX:

a. Align the four holes in the recirculation prevention plate with the four holes in the rack cabinet.

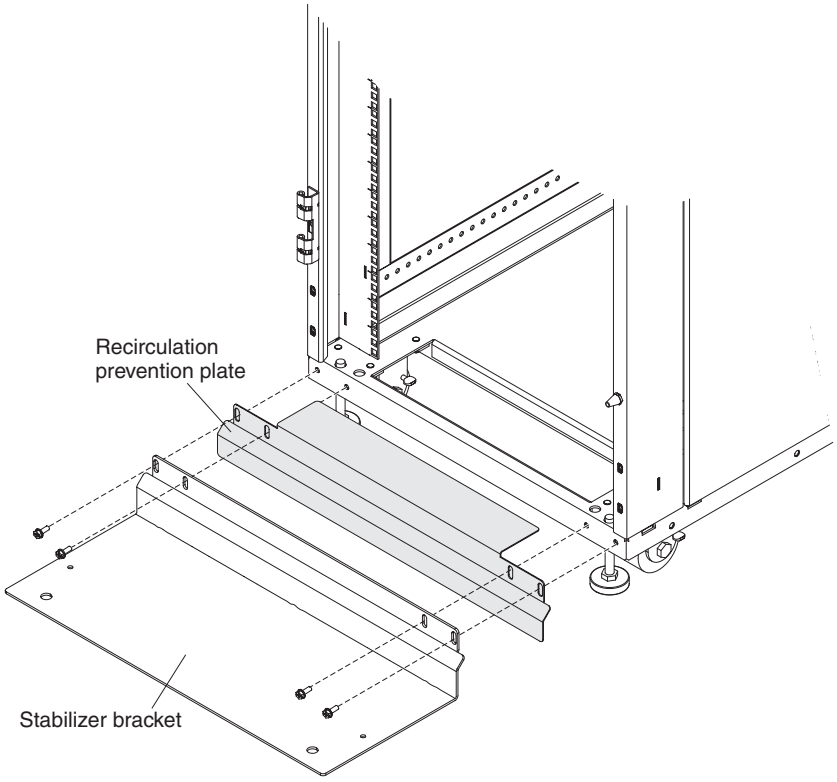

Figure 12. Installing the recirculation prevention plate and the front stabilizer bracket

b. Position the front stabilizer bracket in front of the recirculation prevention plate and align the screw holes.

c. Use the four screws and the hex wrench that come in the hardware kit to secure the front stabilizer bracket and recirculation prevention plate to the rack cabinet.

d. Tighten the screws until the stabilizer bracket is flush against the recirculation prevention plate (if it is used) or flush against the rack (if the recirculation prevention plate is not used).

8. **For stand-alone rack cabinet types 7953, 9363-4PX, 9363-4EX, 9363-4AX, and 9363-4BX):**

   If you are not installing the recirculation prevention plate, attach the front stabilizer to the front of the rack cabinet with the screws and hex wrench that come with the hardware kit.

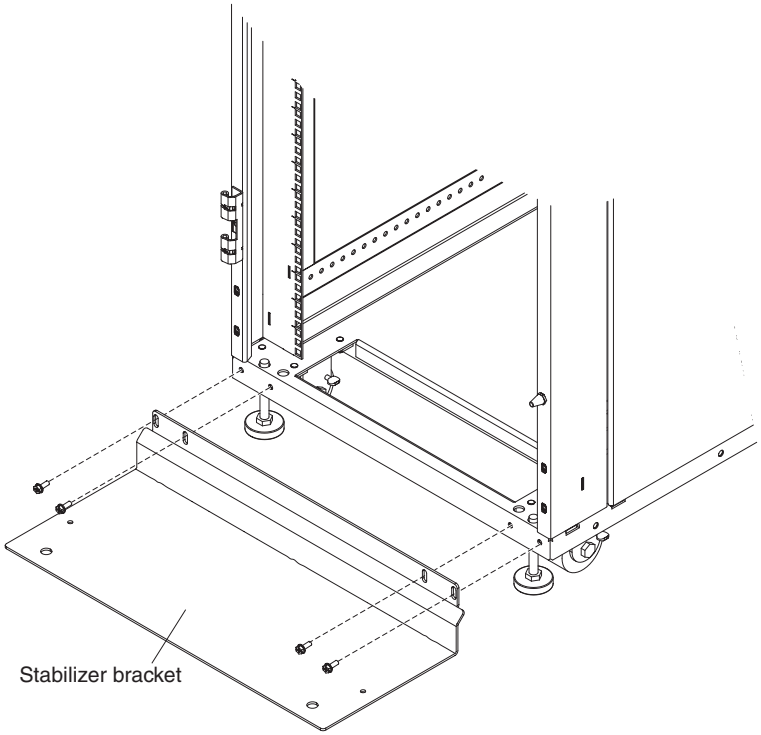

Figure 13. Installing the front stabilizer and no recirculation prevention plate

Note: If required by local building codes, each stand-alone rack can be bolted to the floor with a fastener in each corner.

9. Bolt the rack to the floor surface by using the following methods:
   - **If a front stabilizer bracket or stabilizer plate is installed**, bolt the rack to the floor surface through the holes in the front stabilizer by using two bolts and washers.

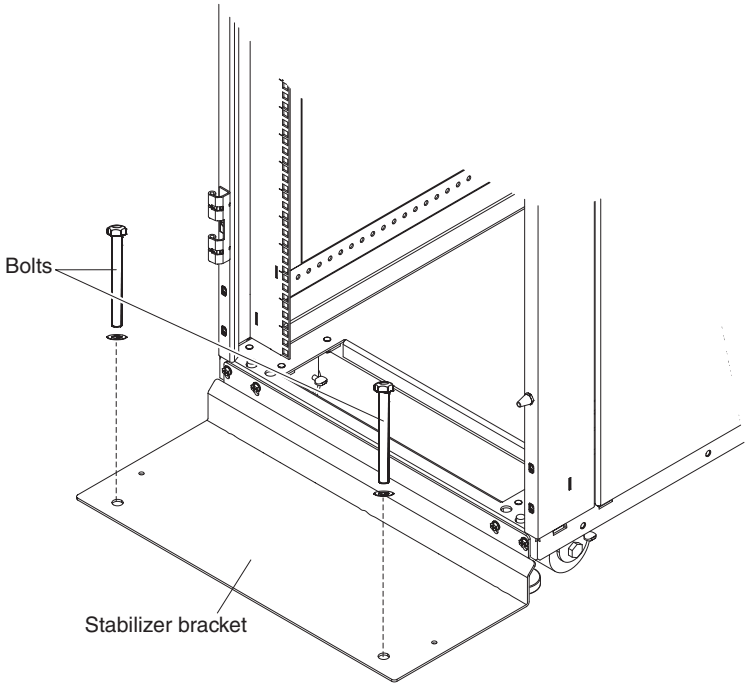

Figure 14. Bolting the front stabilizer to the floor surface

Bolt the rear of the rack to the floor surface through the holes in the lower frame by using two bolts and washers.

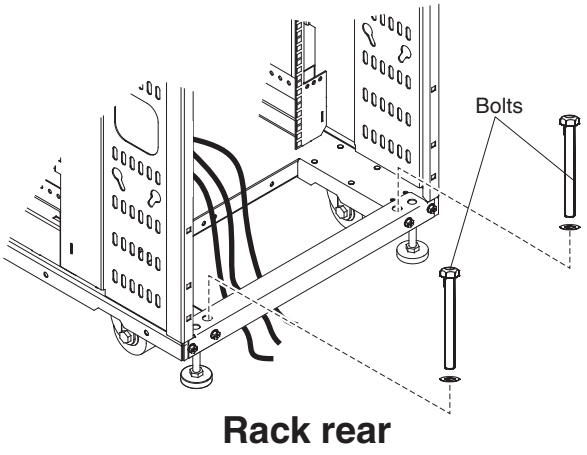

Figure 15. Bolting the rear of the rack to the floor surface

- **If a front stabilizer bracket or stabilizer plate is not installed**, bolt the front of the rack to the floor surface through the holes in the lower frame by using two bolts and washers.

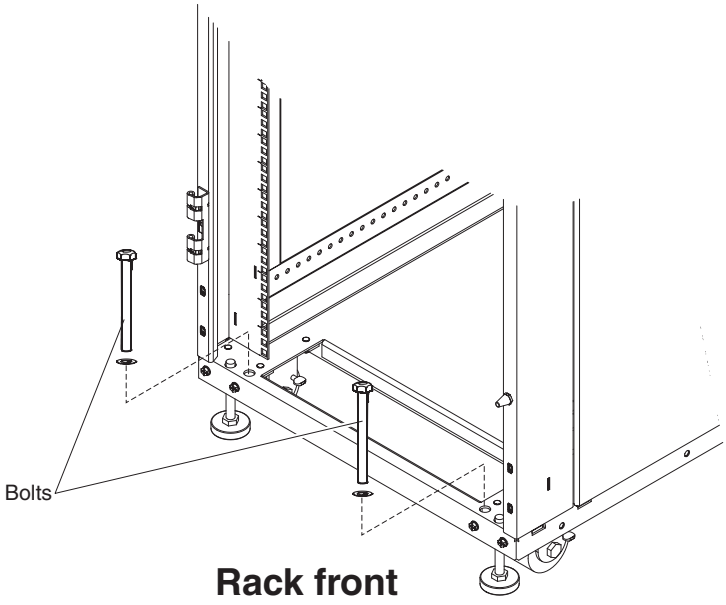

Figure 16. Bolting the front of the rack to the floor surface

Bolt the rear of the rack to the floor surface through the holes in the lower frame by using two bolts and washers. See Figure 15 on page 21.

10. Reinstall the front door if you removed it in step 4 on page 16.

Removing and installing the side covers

The standard rack comes with the side covers installed. Remove the side covers from the rack before you install or remove optional devices.

To remove the side covers from a standard rack, complete the following steps:

1. Unlock the button lock on the top of a side cover.

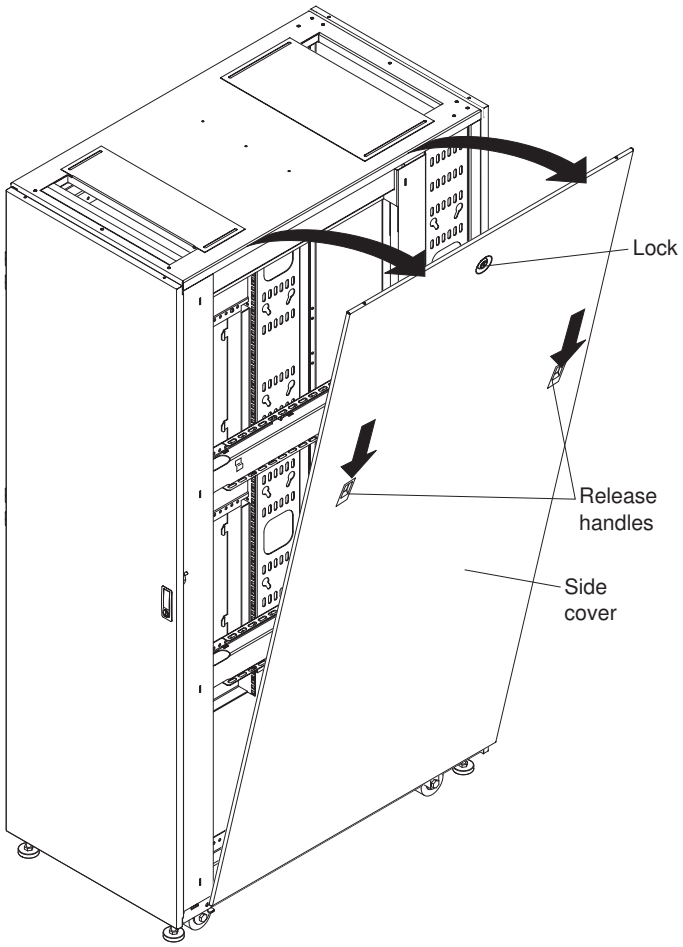

Figure 17. Removing a side cover

2. Press down on both release handles, and tilt the top of the side cover slightly toward you; then, lift the side cover up and away from the ridge on the bottom of the rack cabinet.
3. Repeat this procedure to remove the second side cover.

To install a side cover, align the side cover with the ridge in the bottom side of the rack cabinet and press down. Press in on both release handles and then rotate the top of the side cover toward the rack. Lock the side cover to secure it to the rack cabinet.

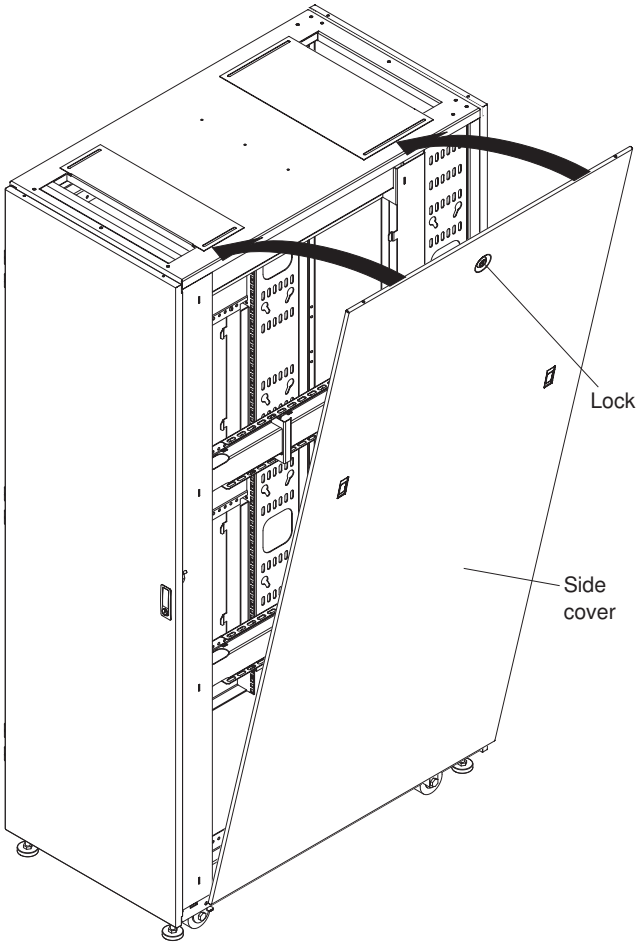

Figure 18. Installing a side cover

Removing and installing a front door (9363-4PX and 9363-4EX only)

All racks come with the front door installed. Remove the front door when you install and remove devices in the rack, if part of the rack is obstructed by the door as you install devices.

To remove the front door from the rack cabinet, complete the following steps:

1. Unlock and open the door.

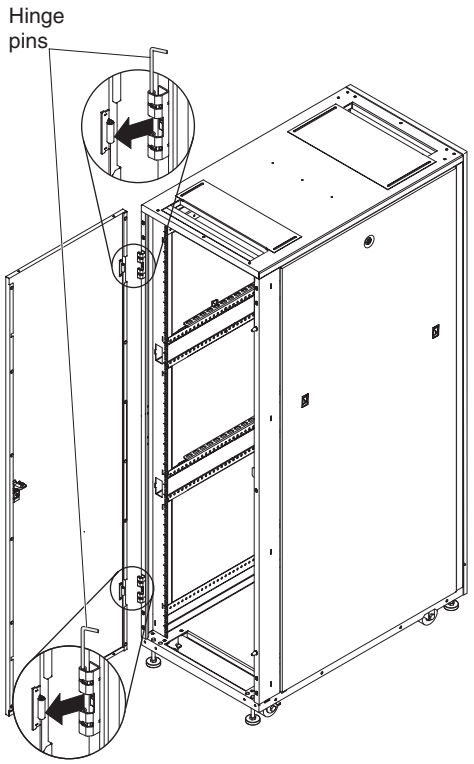

Figure 19. Removing the front door (9363-4PX and 9363-4EX only)

2. Holding the door firmly with one hand, lift both hinge pins until they lock in the open position. This releases the door from the hinges.
3. Grasp the door firmly with both hands and pull it away from the hinges; then, set the door aside.

To install the front door on the rack cabinet, complete the following steps:

1. Grasp the door firmly with both hands, align the door with the hinges, and slide the door into place.
2. Holding the door with one hand, push the hinge pins down to the closed position.

Removing and installing a front door (7953, 9363-4AX, and 9363-4BX only)

The IBM PureFlex System 42U racks come with the front door installed.

To remove a front door from the rack cabinet, complete the following steps:

1. Unlock and open the door.

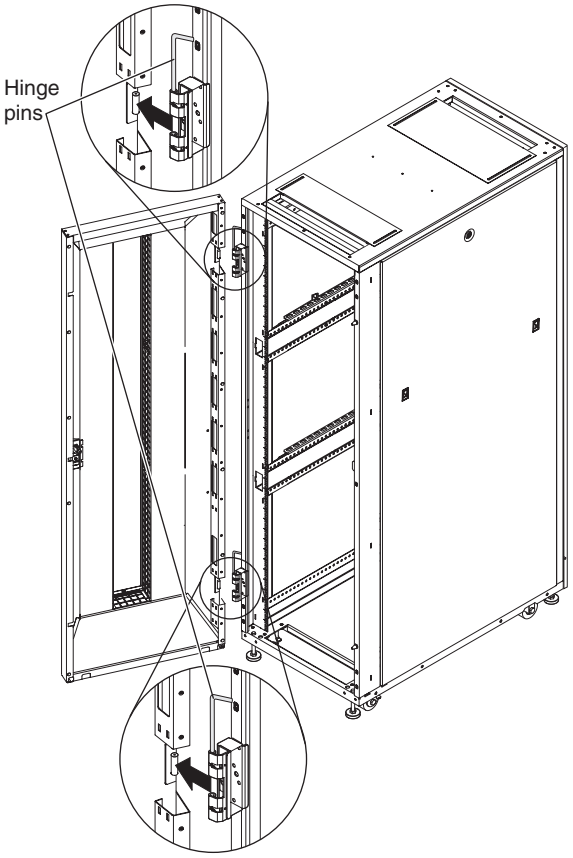

Figure 20. Removing a front door (7953, 9363-4AX, and 9363-4BX)

2. Holding the door firmly with one hand, lift both hinge pins until they lock in the open position. This releases the door from the hinges.
3. Grasp the door firmly with both hands and pull it away from the hinges; then, set the door aside.

To install a front door on the rack cabinet, complete the following steps:

1. Grasp the door firmly with both hands, align the door with the hinges, and slide the door into place.
2. Holding the door with one hand, push the hinge pins down to the closed position.

Removing and installing an IBM PureFlex Rack Door (9363-4CX and 9363-4DX only)

To remove the IBM PureFlex™ door from the rack cabinet, complete the following steps:

1. Unlock and open the front door.
2. Holding the door firmly with one hand, push the top hinge pin latch down and to the left to release the hinge pin **1** .

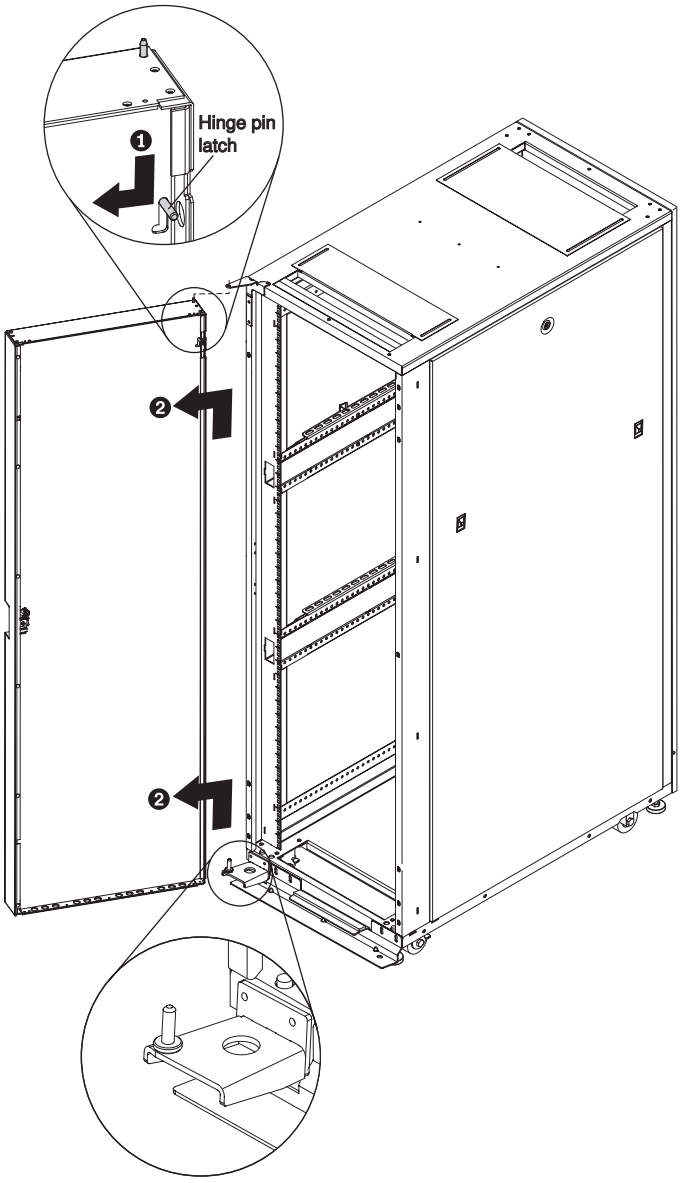

Figure 21. Removing the IBM PureFlex rack door (9363-4CX and 9363-4DX)

3. Grasp the door firmly with both hands and lift it up and off the bottom hinge pin and pull it away from the rack cabinet **2** ; then, set the door aside.

To install an IBM PureFlex front door on the rack cabinet, complete the following steps:

1. Holding the door firmly, align the hole in the bottom of the door with the hinge pin on the bottom hinge bracket **1** . You might have to move the door around until the pin slides into the hole in the bottom of the door.

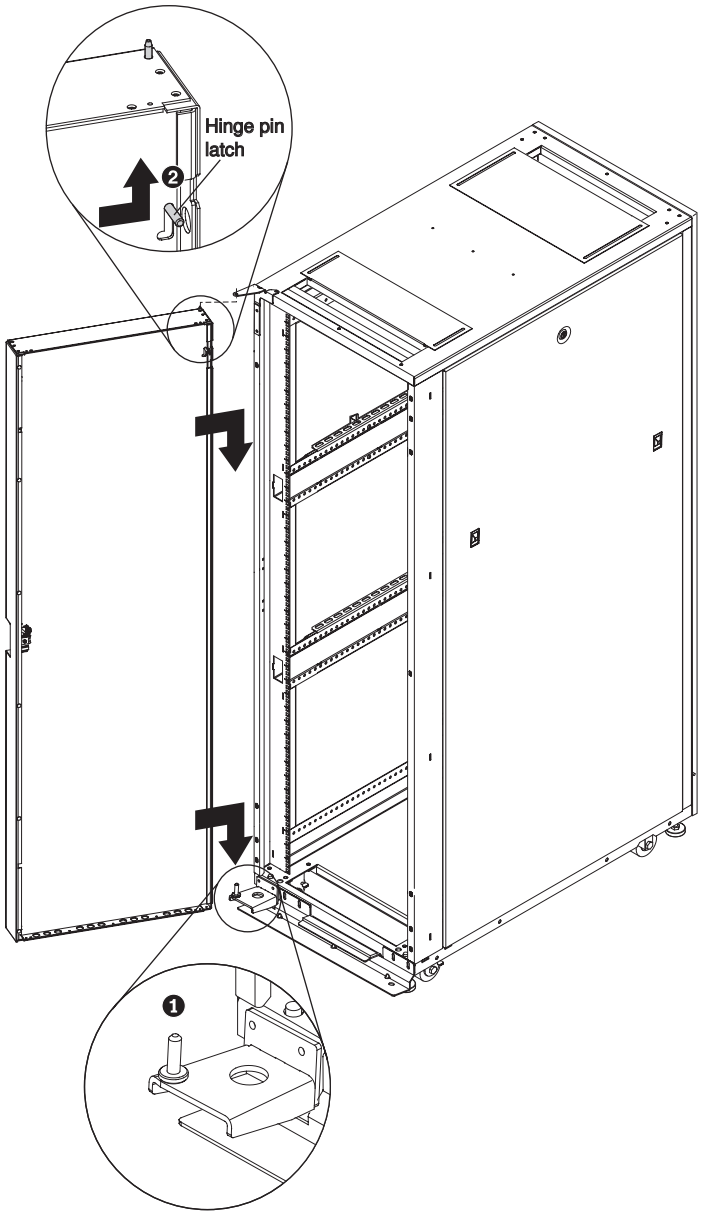

Figure 22. Installing the IBM PureFlex door on the top and bottom hinge brackets (9363-4CX and 9363-4DX)

2. Partially align the hinge pin at the top of the door with the hole in the top hinge bracket (see Figure 22). Push the hinge pin latch up and to the right to retract the hinge pin enough to go into the hole in the hinge bracket **2** . Move the hinge pin latch to the left and down to release the pin fully into the hole in the hinge bracket.

Removing and installing a rear door (all models)

All racks come with the rear door installed. Remove the rear door when you install and remove devices in the rack, if part of the rack is obstructed by the door as you install devices.

To remove a rear door from the rack cabinet, complete the following steps:

1. Unlock and open the door.

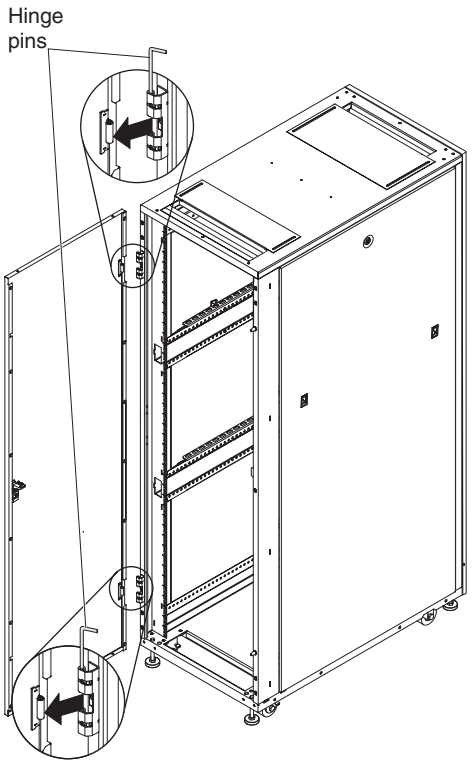

Figure 23. Removing a rear door

2. Holding the door firmly with one hand, lift both hinge pins until they lock in the open position. This releases the door from the hinges.
3. Grasp the door firmly with both hands and pull it away from the hinges; then, set the door aside.

To install a rear door on the rack cabinet, complete the following steps:

1. Grasp the door firmly with both hands, align the door with the hinges, and slide the door into place.
2. Holding the door with one hand, push the hinge pins down to the closed position.

Reversing a front door (9363-4PX and 9363-4EX only)

To reverse a front door on a rack cabinet so that the hinges are on the right side, complete the following steps:

1. Remove the front door according to “Removing and installing a front door (9363-4PX and 9363-4EX only)” on page 25.
2. Remove the doorstop on the top-right side of the rack cabinet by removing the screw.

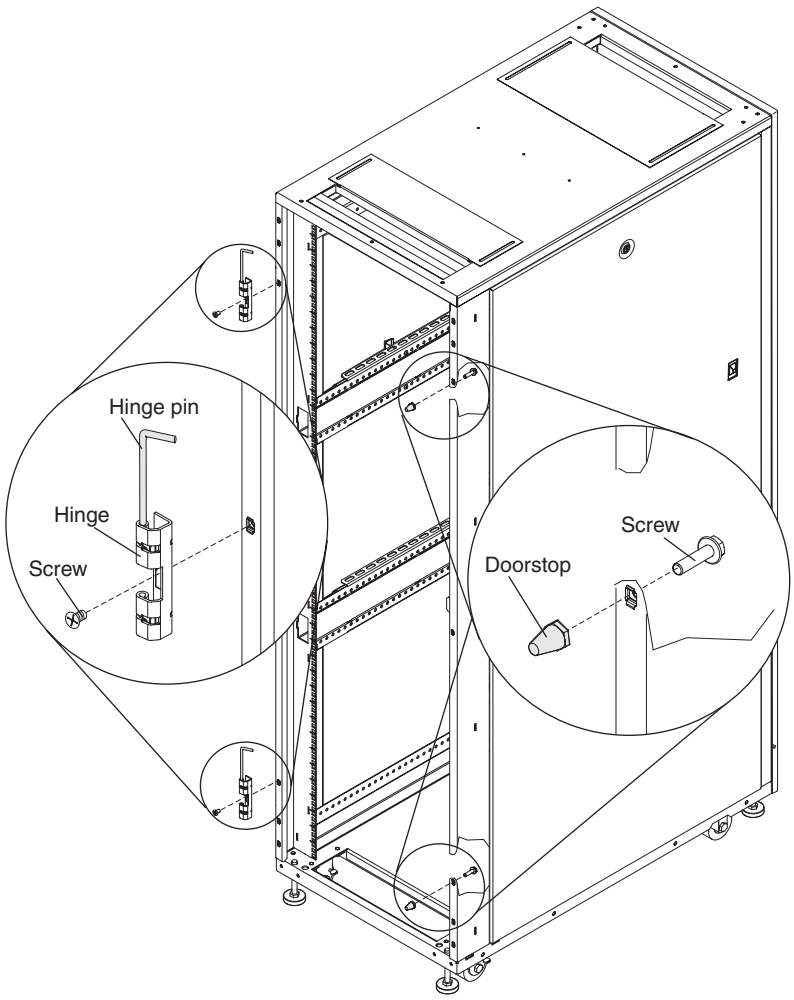

Figure 24. Removing the doorstop and door hinges

3. Remove the door hinges from the rack:
   a. Remove the hinge pin by placing a small screwdriver under the end of the retainer spring, press the spring out, and pull the hinge pin out of the hinge.

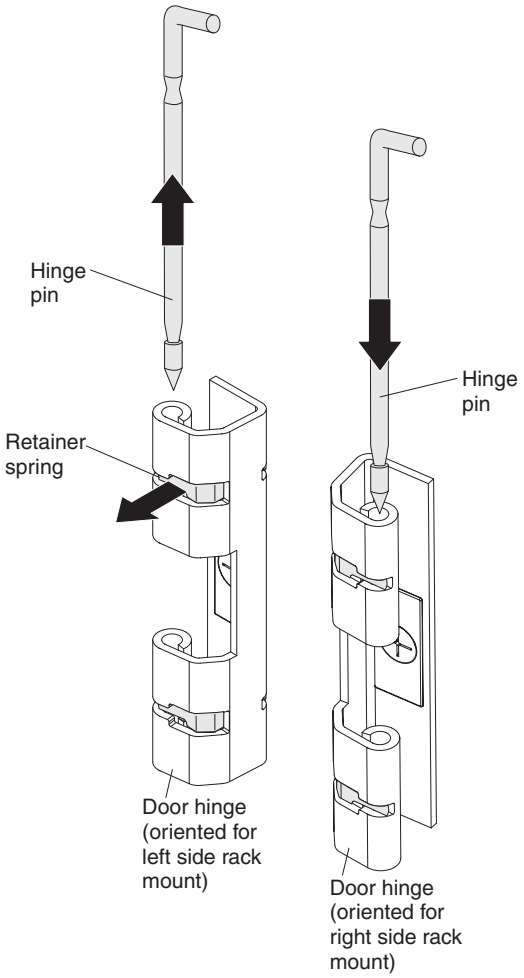

Figure 25. Removing and installing a door hinge pin

   b. Use a Phillips screwdriver to remove the hinge screw.

   Repeat step 3 to remove the other hinge.

4. Attach the doorstop to the top-left side of the rack. Use the empty screw hole from where you removed the top hinge.

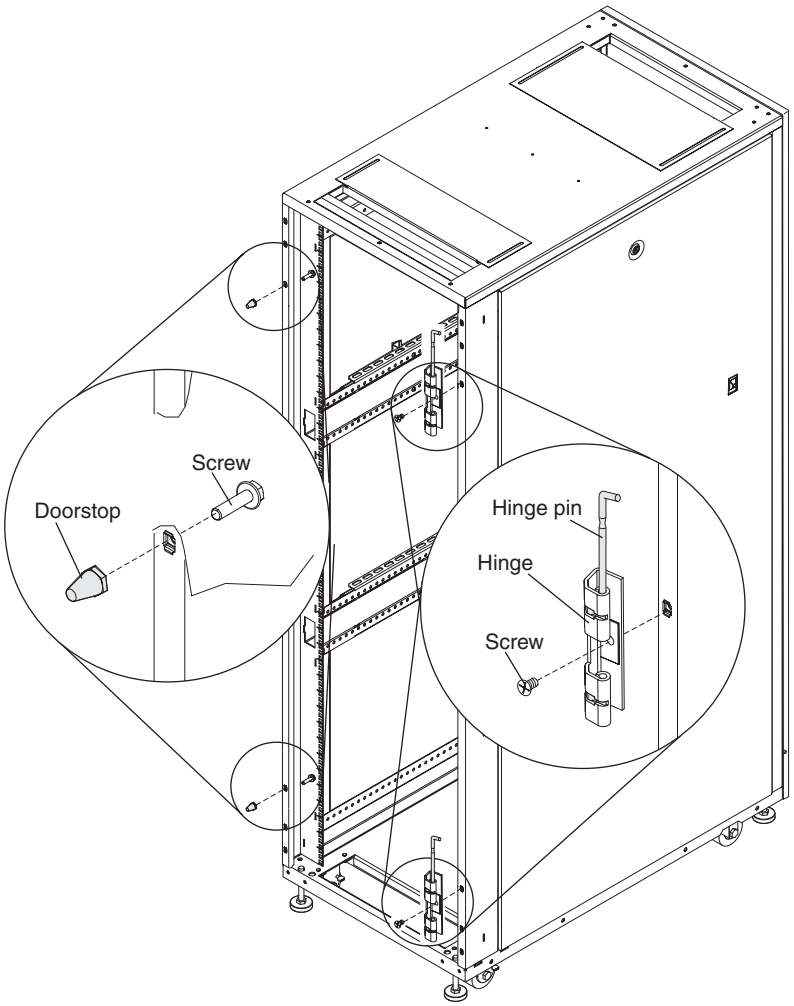

Figure 26. Installing the doorstop and door hinges

5. Install the top and bottom hinges on the right side of the rack cabinet:
   a. Orient the hinge to install it on the right side of the rack cabinet, as shown in the following illustration.

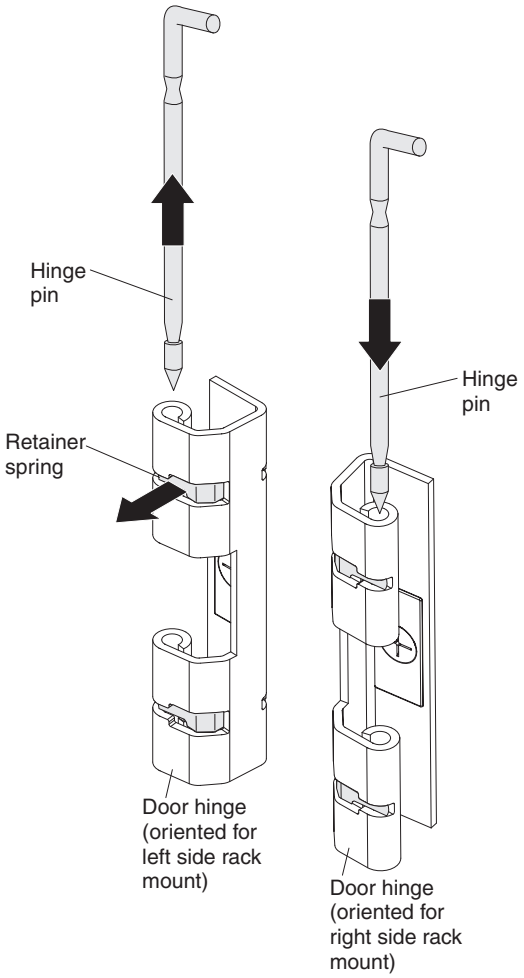

Figure 27. Removing and installing a door hinge pin

   b. Align the screw hole in the hinge with the screw hole on the right side of the rack cabinet. For the top hinge, use the empty screw hole from where you removed the doorstop.
   c. Attach the hinge to the rack flange with the screw.
   d. Partially insert the hinge pins in the hinges.

6. Remove the front door latch from the left side of the rack cabinet and attach it to the right side of the rack cabinet.

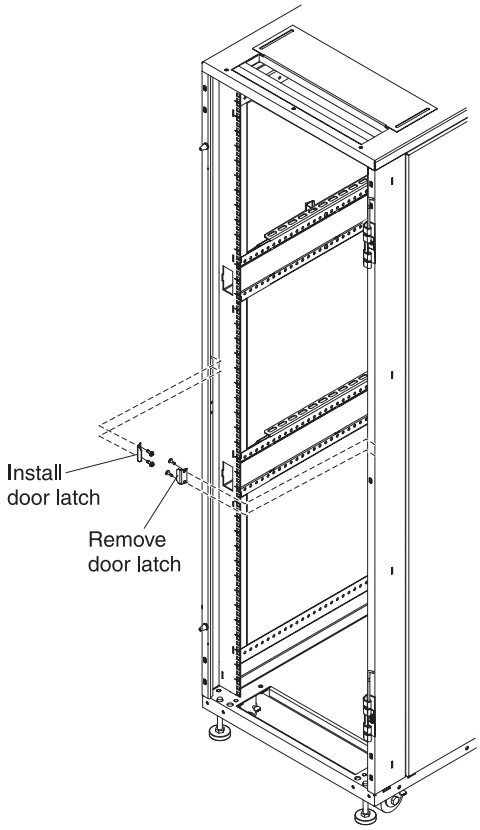

Figure 28. Moving the front door latch

7. Install the door on the right side:
   a. Carefully rotate the door 180°.

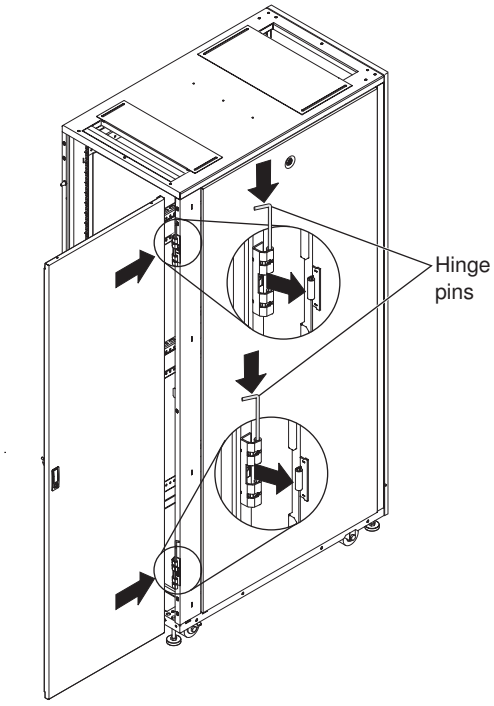

Figure 29. Rotating and installing the door

   b. Grasp the door firmly with both hands, align the door with both hinges, and slide the door into place.
   c. Holding the door with one hand, push the hinge pins down to the closed position.

8. Remove the IBM logo from the bottom of the door; then, snap it into place near the top of the door.

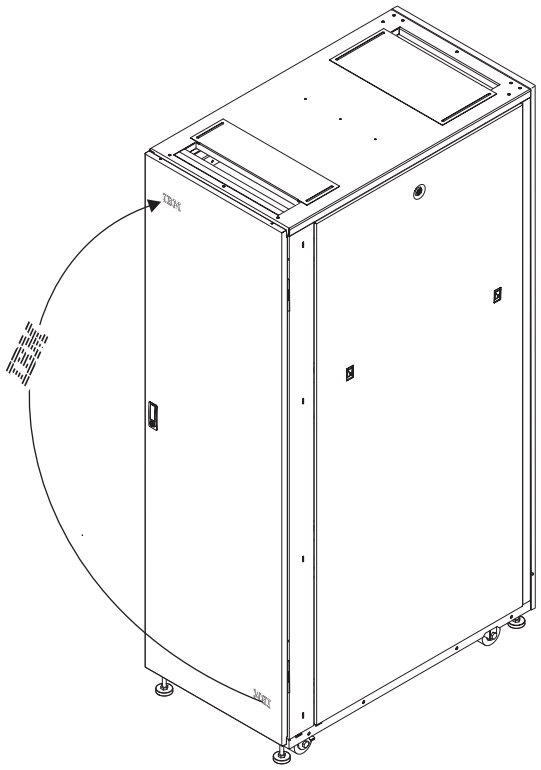

Figure 30. Moving the IBM logo

Attaching racks in a suite

Expansion racks come with all the hardware that is required for you to attach racks together and form a suite. A hex wrench and screws come with the expansion-rack hardware kit. You need one standard rack to form a suite. You have to remove the doors before you can attach the racks together.

Notes:

1. Before you attach an expansion rack to a standard rack or another expansion rack, you must remove the outriggers from the racks so that the racks fit together correctly.
2. In a suite of racks, IBM PureFlex System 42U racks can be attached only to other IBM PureFlex System 42U racks.
3. You cannot install the front upper attachment bracket on the 9363-4CX or 9363-4DX rack models.

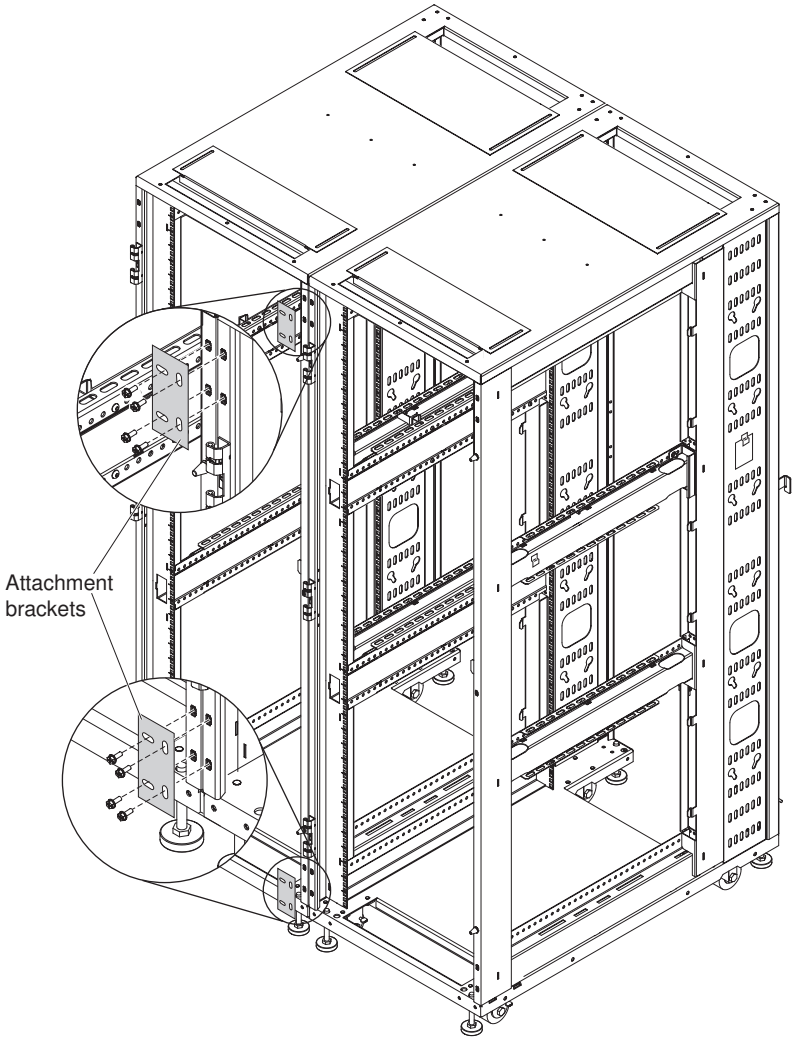

Figure 31. Attaching standard and expansion racks to each other to form a suite

To attach racks together in a suite, complete the following steps:

1. Remove the front and rear doors. For more information, see “Removing and installing a front door (9363-4PX and 9363-4EX only)” on page 25.
2. On the side of the standard rack cabinet where you are attaching the expansion rack, remove the side cover. For more information, see “Removing and installing the side covers” on page 23.
3. Apply the strip of gasket that comes with the hardware kit to the outside front and rear vertical edges of the expansion rack to prevent the two racks from rubbing against each other.
4. Where the two racks come together at the top front, align the screw holes of an attachment bracket (which comes with the expansion rack cabinet) with the holes in the standard rack and expansion rack (see the illustration). Secure the bracket to the racks with four screws. Do not fully tighten the screws. Repeat this step for the bottom front attachment bracket. Then, tighten all of the bracket screws.
5. Repeat step 4 to attach the rear top and bottom attachment brackets.

Repeat this procedure to attach additional expansion racks to the suite.

Chapter 3. Installing optional devices

There are many servers and optional devices that you can install in the standard and expansion racks. Always read the documentation that comes with your server or optional device for detailed installation instructions.

Installation guidelines

When you install optional devices in the rack cabinet, follow these safety guidelines.

Statement 2:

DANGER

- **Always lower the leveling pads on the rack cabinet.**
- **Always install stabilizer brackets on the rack cabinet.**
- **Always install servers and optional devices starting from the bottom of the rack cabinet.**
- **Always install the heaviest devices in the bottom of the rack cabinet.**

© Copyright IBM Corp. 2011, 2012

Statement 4:

DANGER

Electrical current from power, telephone, and communication cables is hazardous.

To avoid a shock hazard:

- **Do not connect or disconnect any cables or perform installation, maintenance, or reconfiguration of this product during an electrical storm.**
- **Connect all power cords to a properly wired and grounded electrical outlet.**
- **Connect to properly wired outlets any equipment that will be attached to this product.**
- **When possible, use one hand only to connect or disconnect signal cables.**
- **Never turn on any equipment when there is evidence of fire, water, or structural damage.**
- **Disconnect the attached power cords, telecommunications systems, networks, and modems before you open the device covers, unless instructed otherwise in the installation and configuration procedures.**
- **Connect and disconnect cables as described in the following table when installing, moving, or opening covers on this product or attached devices.**

To Connect:	**To Disconnect:**
1. Turn everything OFF.	1. Turn everything OFF.
2. First, attach all cables to devices.	2. First, remove power cords from outlet.
3. Attach signal cables to connectors.	3. Remove signal cables from connectors.
4. Attach power cords to outlet.	4. Remove all cables from devices.
5. Turn device ON.	

Statement 5:

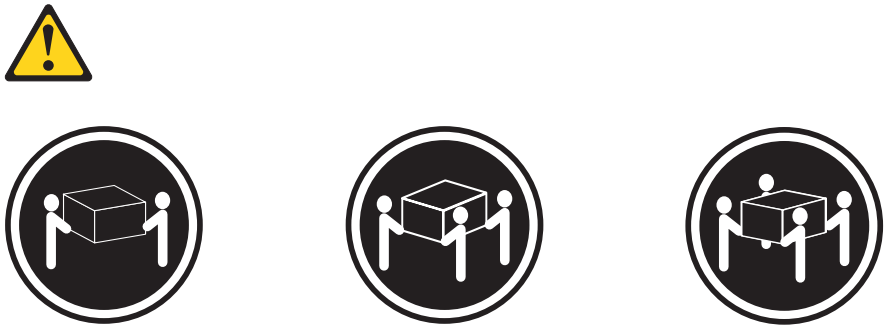

≥ 18 kg (39.7 lb) ≥ 32 kg (70.5 lb) ≥ 55 kg (121.2 lb)

CAUTION:
Use safe practices when lifting.

Statement 6:

CAUTION:
Do not place any object on top of a rack-mounted device unless that rack-mounted device is intended for use as a shelf.

Make sure that you install filler panels over all unoccupied bays.

Always install the heaviest devices in the bottom of the rack cabinet. A configurator tool is available at http://www.ibm.com/systems/x/configtools.html to assist you with determining where to install optional devices in the rack.

For more information about rack cabinets and optional devices, see http://www.ibm.com/systems/xbc/cog/rackcabinetsoptions/rackcabinetsoptions.html.

Installing devices on the rack-mounting flanges

For optional devices that require threaded holes for mounting, you must install either cage nuts or clip nuts. Use cage nuts in the square mounting holes provided in the rack-mounting flanges in the main horizontal 42U compartment. Use clip nuts in the round holes provided in the six 1U rear vertical-mounting compartments. For detailed information about the mounting requirements for a device, see the instructions that come with the device.

Note: The rack cabinet comes with a supply of cage nuts and clip nuts, and devices that require them come with the applicable cage nuts or clip nuts.

Installing threaded rails

If a device has threaded holes or device rails that have threaded holes, you must install the device on the rail-mounting flanges on the inside of the rack-mounting flanges. For detailed information about how to use threaded rails, see the device documentation.

Installing cage nuts

Install cage nuts in the rack-mounting flanges with either the cage-nut-insertion tool or a flat-blade screwdriver. The cage-nut-insertion tool comes with the rack and some optional devices.

Using the cage-nut-insertion tool

To install a cage nut with the cage-nut-insertion tool, complete the following steps.

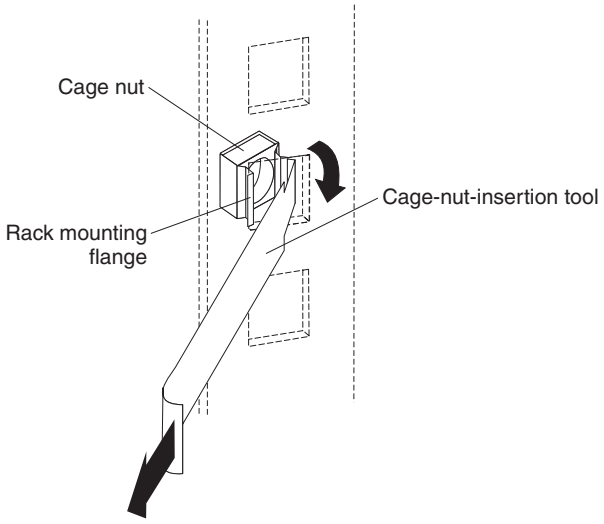

Figure 32. Installing cage nuts with the cage-nut-insertion tool

1. Determine the hole in which you want to install the cage nut.
2. From the inside of the rack mounting flange, insert one edge of the cage nut into the hole.
3. Push the tool through the hole and hook the other edge of the cage nut.
4. Pull the tool and the cage nut back through the hole to complete the installation of the cage nut.

Using a flat-blade screwdriver

To install a cage nut with a flat-blade screwdriver, complete the following steps.

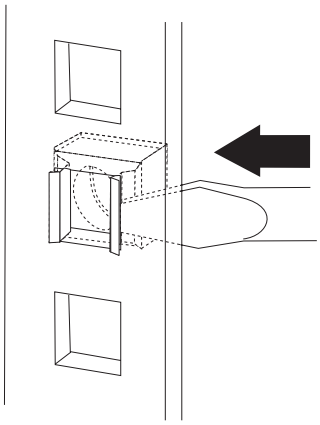

Figure 33. Installing cage nuts with a flat-blade screwdriver

1. Determine the hole in which you want to install the cage nut.
2. Hold the cage nut in one hand and compress the cage-nut clip with a flat-blade screwdriver.
3. With the clip compressed, push the edge of the cage nut fully into the hole from the inside of the rack-mounting flange.
4. Release the screwdriver pressure on the clip to lock the cage nut into place.

Installing clip nuts

Install clip nuts by sliding them over the mounting holes in the rear vertical 1U mounting compartments as shown in the following illustration.

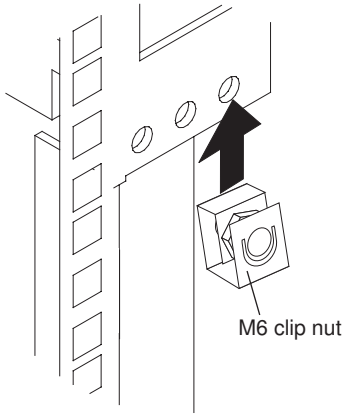

Figure 34. Installing clip nuts on the rack-mounting flanges

Installing devices vertically in the rack cabinet

You can use the space on the sides and in the rear of the rack cabinet to vertically mount power distribution units (PDUs) and console switches.

For more information about installing a device vertically in the rack cabinet, see the documentation that comes with your PDU or console switch.

Installing a 1U PDU or console switch vertically in the rack side area

The rack cabinet comes with space on the sides to vertically mount power distribution units (PDUs) and console switches. Each rack has six locations, three on each side of the rack cabinet. To install a device in the side area, you must use flange nuts and the M6 button-head cap screws that come in the hardware kit.

To install a 1U PDU or console switch vertically in the rack side area, complete the following steps:

1. Attach the two mounting brackets to the sides of the PDU or console switch. For more information, see the documentation that comes with the device.
2. Align the holes in the mounting bracket with the holes in the rack flange.

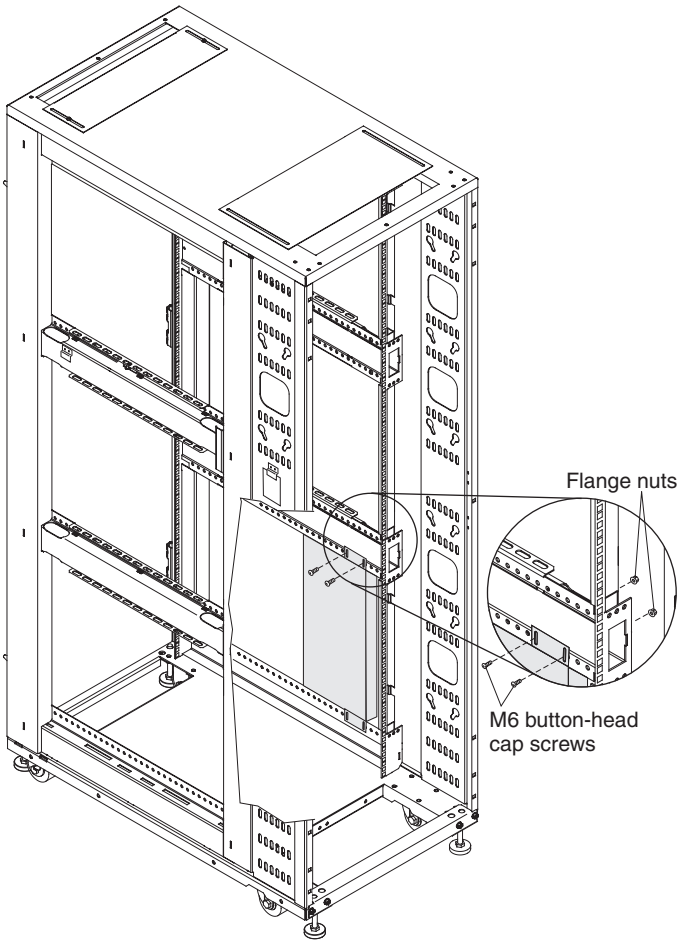

Figure 35. Installing a 1U PDU or console switch vertically in the rack side area

3. Secure the PDU or console switch to the rack with four flange nuts on the rack flange and four M6 button-head cap screws on the mounting bracket side.

Installing a 1U PDU or console switch vertically in a rack side pocket

The rack cabinet comes with rear vertical side pockets that you can use to vertically mount power distribution units (PDUs) and console switches. Each rack has six locations, three on each side of the rack cabinet. The rear vertical side pockets have round holes in the rack-mounting flanges. You must install clip nuts in the holes before you install a device.

To install 1U PDU or console switch vertically in a rack side pocket, complete the following steps:

1. Attach the two mounting brackets to the sides of the PDU or console switch. For more information, see the documentation that comes with the device.
2. Install four clip nuts on the rack flanges as shown in the illustration.

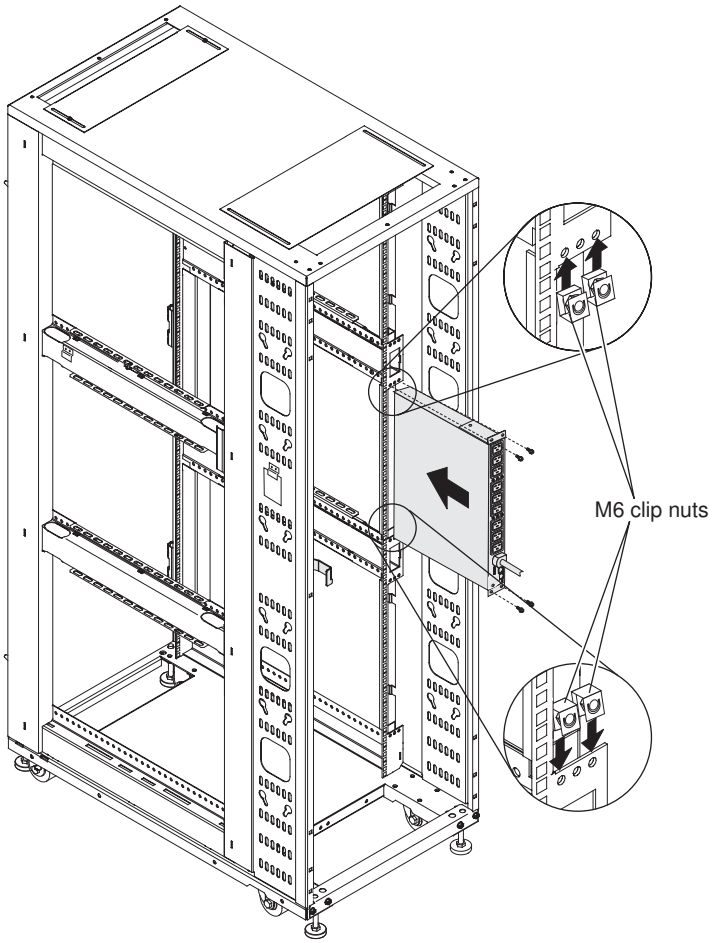

Figure 36. Installing a 1U PDU or console switch vertically in a rack side pocket

3. Carefully slide the PDU or console switch into the side pocket and secure the device with four M6 screws.

Installing a 0U PDU vertically in the rear of a rack cabinet

The following illustration shows one way to install a 0U PDU in the rear of the rack cabinet. You can install up to four 0U PDUs vertically in the rack cabinet, depending on your rack configuration.

To install a 0U PDU vertically in the rear of a rack cabinet, orient the PDU vertically and insert the two pegs on the PDU into the keyhole slots in the side of the rack cabinet (see the following illustration). Push down to secure the PDU in position.

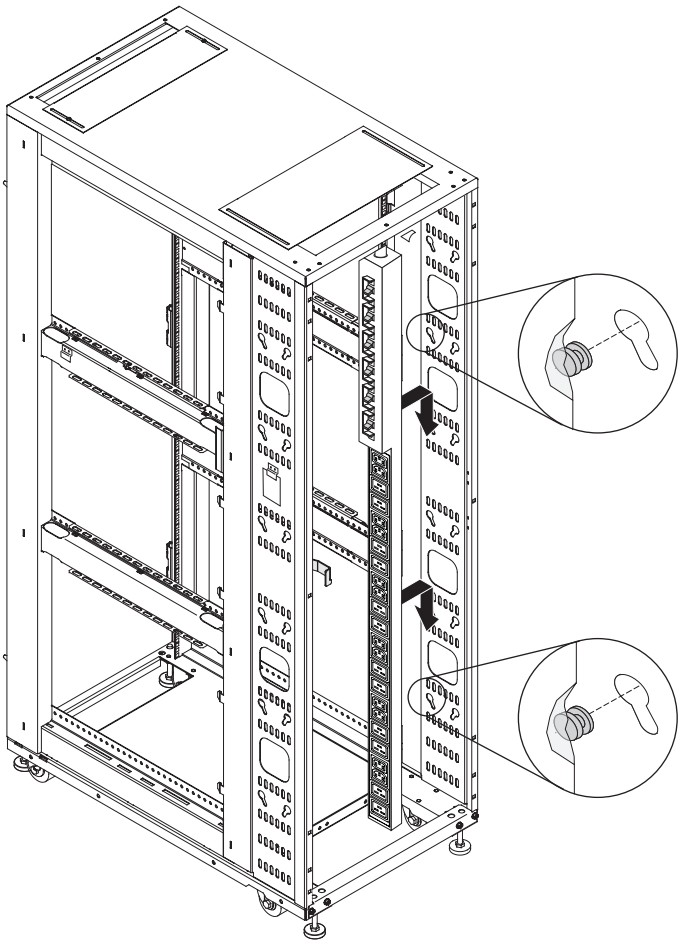

Figure 37. Installing a 0U PDU vertically in the rear of the rack cabinet

Chapter 4. Managing cables

Always read the instructions that come with your server or optional device for detailed cable-management information. Use the following general guidelines when you cable servers or other devices that you install in a rack cabinet.

Statement 8:

DANGER

- **Plug power cords from devices in the rack cabinet into electrical outlets that are located near the rack cabinet and are easily accessible.**
- **Each rack cabinet might have more than one power cord. Be sure to disconnect all power cords in the rack cabinet before servicing any device in the rack cabinet.**
- **Install an emergency-power-off switch if more than one power device (power distribution unit or uninterruptible power supply) is installed in the same rack cabinet.**
- **Connect all devices installed in a rack cabinet to power devices installed in the same rack cabinet. Do not plug a power cord from a device installed in one rack cabinet into a power device installed in a different rack cabinet.**

- Do not run cables in front of or behind other devices that will prevent service access to those devices.
- Do not bend cables beyond the specified limits.
- Label all cables so that they are clearly distinguishable from each other.
- When you install devices that are mounted on slide rails, such as servers, observe the following precautions:
  - Run the cables neatly along equipment cable-management arms and secure the cables to the arms, using provided cable straps.
  - Leave enough extra cable so that you can fully extend the device without straining the cables.
  - Secure the cables so that you can retract the device without pinching or cutting the cables.
- When you install devices that are mounted on fixed rails, observe the following precautions:
  - Run the cables neatly along the posts or side rails in the rack cabinet out of the way of other installed devices.
  - Secure the cables with the provided cable straps.
- Make sure that the cables cannot be pinched or cut by the rack cabinet rear door or other devices.
- Run internal cables that connect devices in adjoining racks through the large openings in the rear of the rack cabinet.
- Run external cables through the bottom of the rack cabinet or through the cable-access opening in the top of the rack.

© Copyright IBM Corp. 2011, 2012

Front-to-rear cable channels

You can route cables from the front to the rear of the rack cabinet by using the cable channels on the sides of the rack. There are two cable channels on each side of the rack cabinet.

Before you use a cable channel, remove the cable channel cap. You can use a flat-blade screwdriver or a similar tool to pry the cap off the end of the channel. If a cable channel is not being used, keep the cap in place to prevent hot air recirculation from the rear of the rack to the front of the rack.

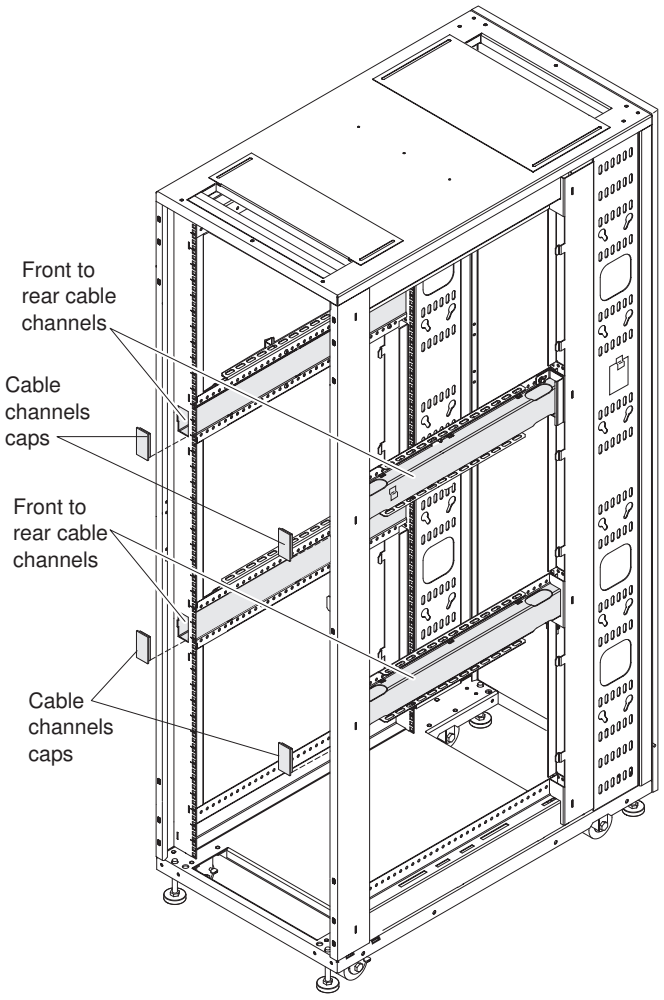

Figure 38. Removing the caps from the front-to-rear cable channels

Using the cable-access bar in the bottom of the rack cabinet

The cable-access bar on the bottom rear of the rack cabinet keeps the external cables in place.

To route external cables through the opening in the bottom rear of the rack, complete the following steps:

1. Remove the four screws that attach the cable-access bar to the rack cabinet, as shown in the following illustration.

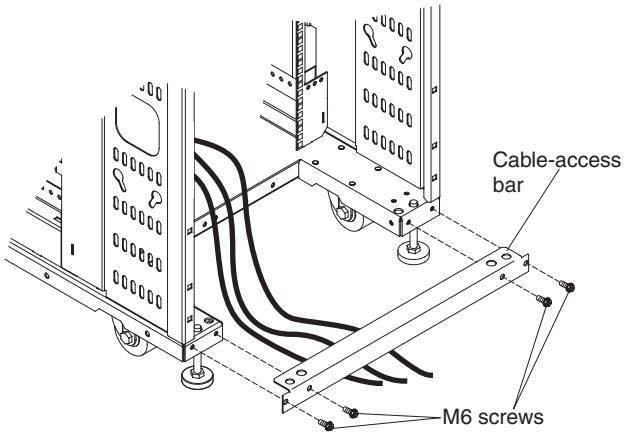

Figure 39. Routing cables using the cable-access bar

2. Route the cables through the opening.
3. Reattach the cable-access bar to the rack cabinet with the four screws that you removed in step 1. Make sure that you do not pinch or cut any cables.

Using the cable-access openings in the top of the rack

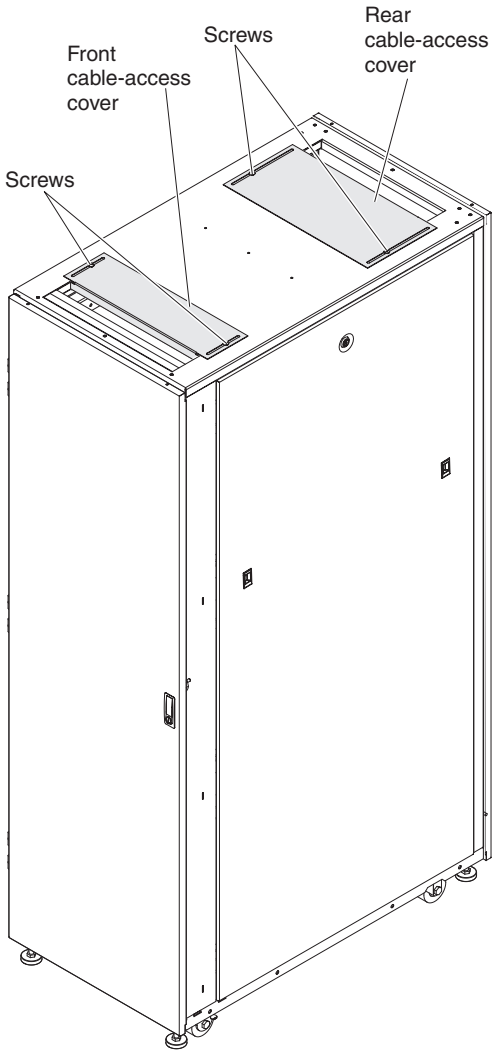

Figure 40. Location of the cable-access openings

Use the front and rear rectangular cable-access openings on the top of the rack cabinet to route external cables and to control the flow of air inside the rack.

To adjust a cable-access cover, use a Phillips or flat-blade screwdriver to loosen the two screws on the sides of the cover. Then, slide the cable-access cover to the position that you want, based on the requirements for your rack configuration. Use the following guidelines to adjust the size of the cable-access openings:

- **Top front cable-access opening:** Slide the cable-access cover as far forward as possible to close off the open area so no hot exhaust air can recirculate back through the rack and exhaust out the top of the rack. The front opening is very close to the front of the rack and the air inlet to the servers in the rack.
- **Top rear cable-access opening:** Slide the cover all the way open or closed, or in any intermediate position. Leaving the cover open provides extra exhaust area for components near the top and bottom of the rack; however, in some configurations, this shortens the hot air recirculation path from the rear to the front.

For information about adjusting the air flow in the rack if an IBM Rear Door Heat eXchanger is installed on the rack cabinet, see the *Installation and Maintenance Guide* that comes with the heat exchanger.

Mounting an overhead cable tray

The rack cabinet comes with pre-drilled holes in the top that you can use to attach an overhead cable tray (not provided by IBM) to the top of the rack suite.

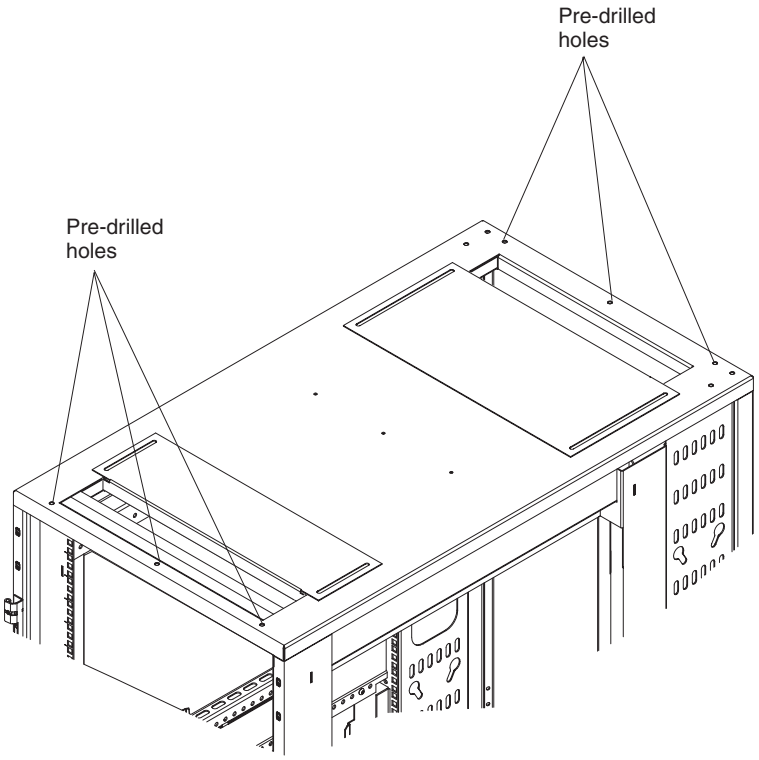

Figure 41. Pre-drilled holes in the top of the rack cabinet

Chapter 5. Moving a rack cabinet

Before you move the rack cabinet to another location, read the important guidelines in this chapter.

When you move a rack cabinet, observe the following safety guidelines.

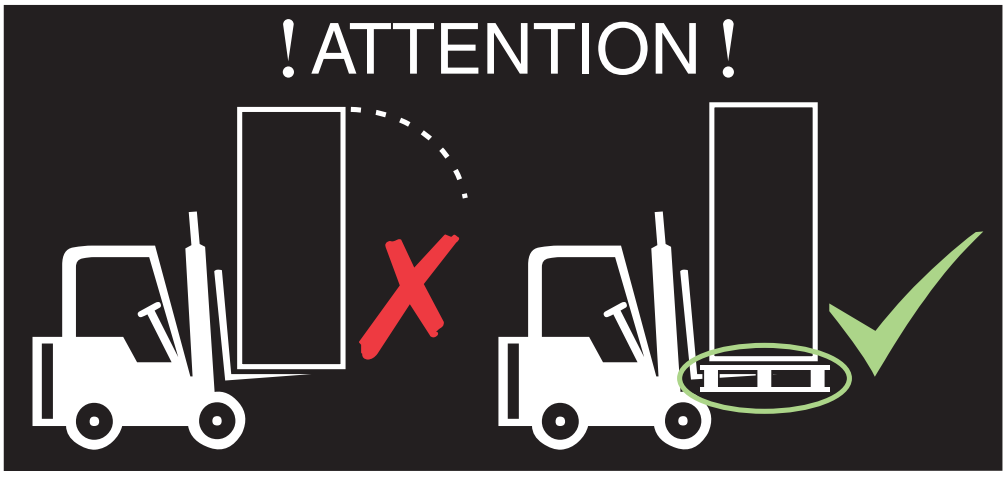

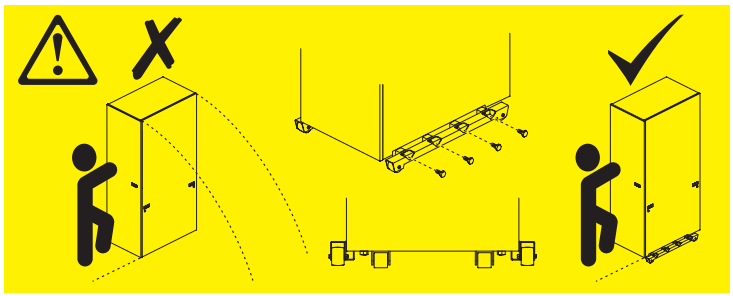

© Copyright IBM Corp. 2011, 2012

Statement 8:

DANGER

- **Plug power cords from devices in the rack cabinet into electrical outlets that are located near the rack cabinet and are easily accessible.**
- **Each rack cabinet might have more than one power cord. Be sure to disconnect all power cords in the rack cabinet before servicing any device in the rack cabinet.**
- **Install an emergency-power-off switch if more than one power device (power distribution unit or uninterruptible power supply) is installed in the same rack cabinet.**
- **Connect all devices installed in a rack cabinet to power devices installed in the same rack cabinet. Do not plug a power cord from a device installed in one rack cabinet into a power device installed in a different rack cabinet.**

Statement 11:

CAUTION:
Removing components from the upper positions in the rack cabinet improves rack stability during relocation. Follow these general guidelines whenever you relocate a populated rack cabinet within a room or building:

- **Reduce the weight of the rack cabinet by removing equipment starting at the top of the rack cabinet. When possible, restore the rack cabinet to the configuration of the rack cabinet as you received it. If this configuration is not known, you must do the following:**
  - **Remove all devices in the 22U position and above.**
  - **Ensure that the heaviest devices are installed in the bottom of the rack cabinet.**
  - **Ensure that there are no empty U-levels between devices installed in the rack cabinet below the 22U level.**
- **If the rack cabinet you are relocating is part of a suite of rack cabinets, detach the rack cabinet from the suite.**
- **Inspect the route that you plan to take to eliminate potential hazards.**
- **Verify that the route that you choose can support the weight of the loaded rack cabinet. Refer to the documentation that comes with your rack cabinet for the weight of a loaded rack cabinet.**
- **Verify that all door openings are at least 760 x 2083 mm (30 x 82 in.)**
- **Ensure that all devices, shelves, drawers, doors, and cables are secure.**
- **Ensure that the four leveling pads are raised to their highest position.**
- **Ensure that there is no stabilizer bracket installed on the rack cabinet.**
- **Do not use a ramp inclined at more than ten degrees.**
- **Once the rack cabinet is in the new location, do the following:**
  - **Lower the four leveling pads.**
  - **Install stabilizer brackets on the rack cabinet.**
  - **If you removed any devices from the rack cabinet, repopulate the rack cabinet from the lowest position to the highest position.**

If a long distance relocation is required, restore the rack cabinet to the configuration of the rack cabinet as you received it. Pack the rack cabinet in the original packaging material, or equivalent. Also, lower the leveling pads to raise the casters off of the pallet and strap the rack cabinet to the pallet.

Make sure that a load of 75 kg (165 lb) or more is placed at the bottom of a configured rack that is not bolted to the floor.

To move the rack cabinet to another location, complete the following general steps:

1. Follow the safety guidelines in this chapter.
2. Know the weight of the rack cabinet. To help determine the weight of the rack, see Table 2 on page 10. A general guideline is to assume a weight of 23 kg (50 lb) per rack U-space.
3. Use the following weight limit guidelines:

- If the rack cabinet is empty, at least two people are required to move the rack.
- If the rack cabinet weight is between 142 and 227 kg (between 313 and 500 lb), three or four people are required to move the rack.
- If the rack cabinet weight is greater than 227 kg (500 lb), professional movers are required to move the rack.

4. Install the outriggers on both sides of the rack cabinet.

DANGER:

Always relocate the rack cabinet with the outriggers installed. Keep the outriggers and install them if you have to move the rack to another location in the future.

Use the 6 mm hex wrench that comes in the hardware kit to install the four bolts that attach each outrigger to the rack cabinet. Make sure that you tighten the bolts securely.

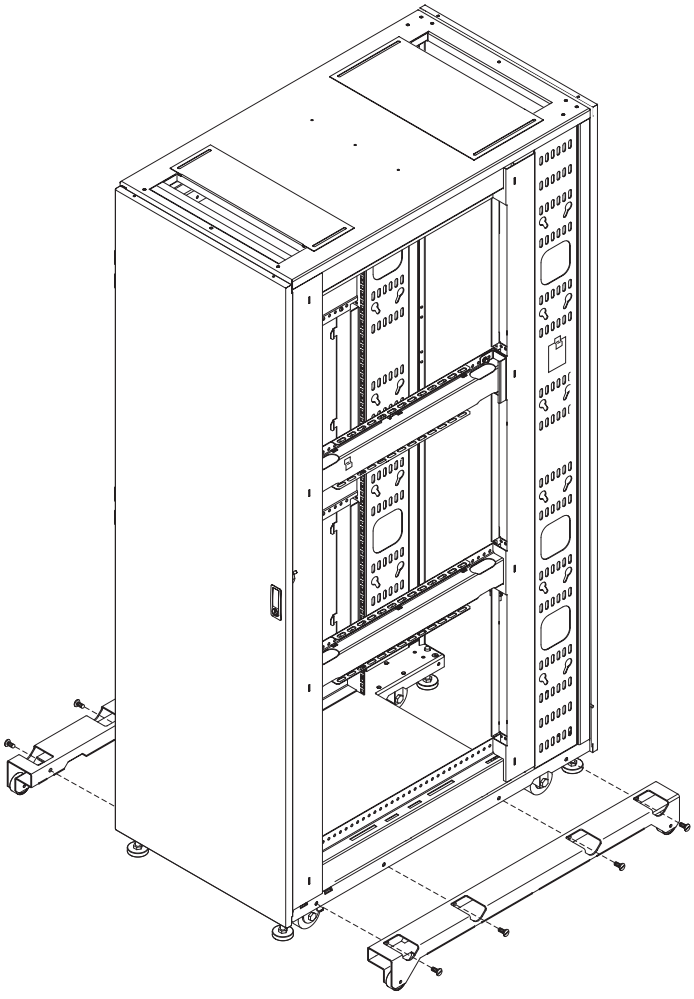

Figure 42. Installing the outriggers

5. Carefully move the rack cabinet to the new location by using the safety guidelines in this chapter.

Chapter 6. Parts listing

The replaceable components that are available for the racks are described in this chapter. For an updated parts listing, go to http://www.ibm.com/supportportal/.

Field replaceable units (FRUs) must be replaced only by a trained service technician, unless they are classified as customer replaceable units (CRUs).

Tier 1 CRU: Replacement of Tier 1 CRUs is your responsibility. If IBM installs a Tier 1 CRU at your request without a service contract, you will be charged for the installation.

Tier 2 CRU: You may install a Tier 2 CRU yourself or request IBM to install it, at no additional charge, under the type of warranty service that is designated for your product.

For information about getting service and assistance, see Appendix A, “Getting help and technical assistance,” on page 63. For information about the terms of the warranty, see the *Warranty Information* document that comes with the rack cabinet.

© Copyright IBM Corp. 2011, 2012

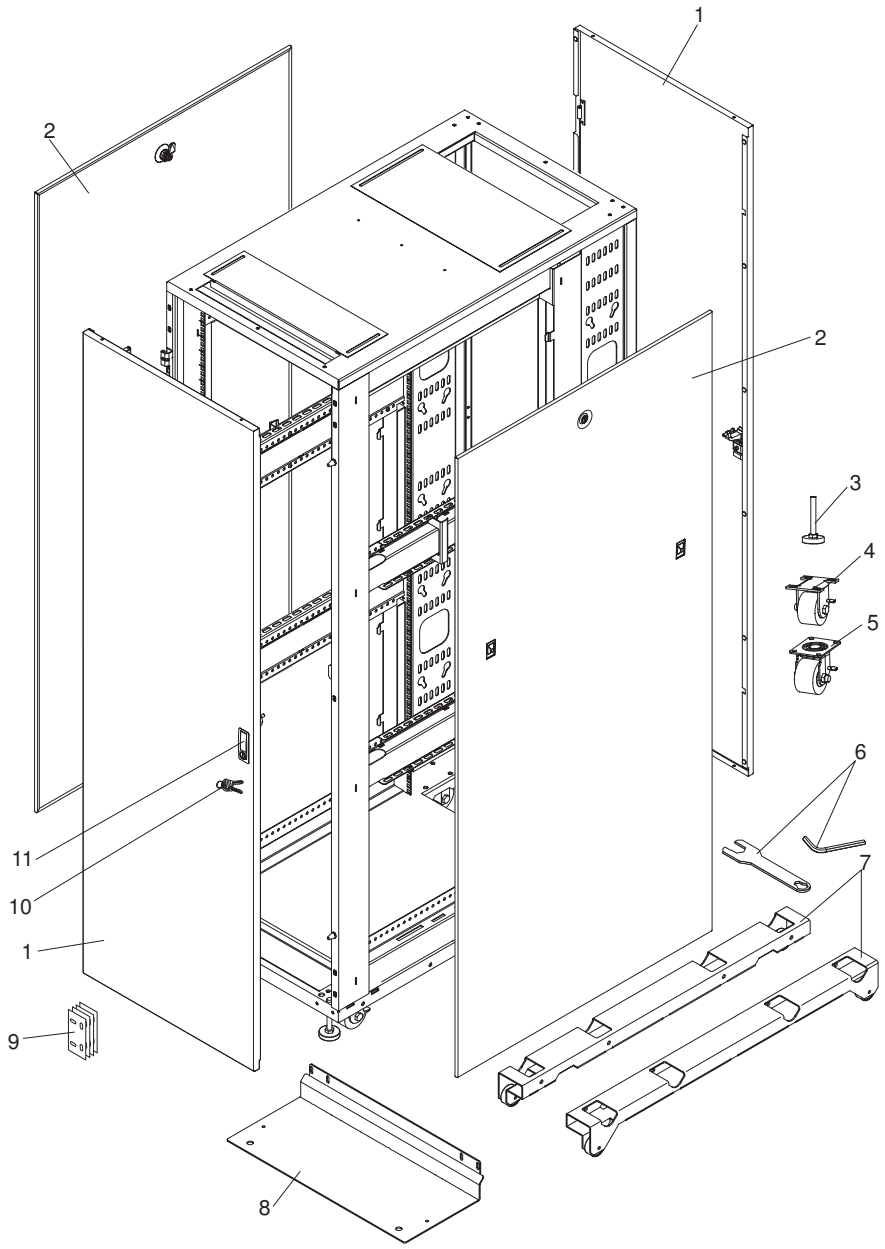

Figure 43. IBM 42U rack and expansion rack parts

Table 4. Parts listing for IBM 42U 1100 mm Enterprise V2 Dynamic Rack, Type 9363-4PX and IBM 42U 1100 mm Enterprise V2 Dynamic Expansion Rack, Type 9363-4EX

Index	Description	CRU part number (Tier 1)	CRU part number (Tier 2)	FRU part number (trained service technician only)
1	Front / rear door	90Y3056		
2	Side cover	90Y3065		
3	Adjustable foot			90Y3063
4	Fixed caster, front			90Y3061
5	Swivel caster, rear			90Y3062
6	Hardware and tool kit (includes tools, screws, washers, cage nuts, and fasteners)	90Y3064		
7	Outrigger (side stabilizer)		90Y3066	
8	Front stabilizer		90Y3059	
9	Baying kit	90Y3060		
10	Keys, door and side cover	90Y3058		
11	Latch, door	90Y3057		

Table 5. Parts listing for IBM PureFlex System 42U Rack, Type 7953 and 9363-4AX and IBM PureFlex System 42U Expansion Rack, Type 7953 and 9363-4BX

Index	Description	CRU part number (Tier 1)	CRU part number (Tier 2)	FRU part number (trained service technician only)
	IBM PureFlex System 42U rack front door	00D7661		
1	Rear door	90Y3056		
2	Side cover	90Y3065		
3	Adjustable foot			90Y3063
4	Fixed caster, front			90Y3061
5	Swivel caster, rear			90Y3062
6	Hardware and tool kit (includes tools, screws, washers, cage nuts, and fasteners)	90Y3064		
7	Outrigger (side stabilizer)		90Y3066	
8	Front stabilizer		90Y3059	
9	Baying kit	90Y3060		
10	Keys, door and side cover	90Y3058		
11	Latch, door	90Y3057		
	IBM Rear Door Heat eXchanger V2			95Y2284

Table 6. Parts listing for IBM PureFlex System 42U Rack, Type 9363-4CX and IBM PureFlex System 42U Expansion Rack, Type 9363-4DX

Index	Description	CRU part number (Tier 1)	CRU part number (Tier 2)	FRU part number (trained service technician only)
	IBM PureFlex rack front door (9363-4CX and 9363-4DX only)	44X3158		
1	Rear door	90Y3056		
2	Side cover	90Y3065		
3	Adjustable foot			90Y3063
4	Fixed caster, front			90Y3061
5	Swivel caster, rear			90Y3062
6	Hardware and tool kit (includes tools, screws, washers, cage nuts, and fasteners)	90Y3064		
7	Outrigger (side stabilizer)		90Y3066	
9	Baying kit	90Y3060		
10	Keys, door and side cover	90Y3058		
11	Latch, door	90Y3057		
	IBM Rear Door Heat eXchanger V2			95Y2284
	Stabilizer plate and front air dam		44X3153	

Appendix A. Getting help and technical assistance

If you need help, service, or technical assistance or just want more information about IBM products, you will find a wide variety of sources available from IBM to assist you. Use this information to obtain additional information about IBM and IBM products, determine what to do if you experience a problem with your IBM system or optional device, and determine whom to call for service, if it is necessary.

Before you call

Before you call, make sure that you have taken these steps to try to solve the problem yourself:

- Check all cables to make sure that they are connected.
- Check the power switches to make sure that the system and any optional devices are turned on.
- Check for updated firmware and operating-system device drivers for your IBM product. The IBM Warranty terms and conditions state that you, the owner of the IBM product, are responsible for maintaining and updating all software and firmware for the product (unless it is covered by an additional maintenance contract). Your IBM service technician will request that you upgrade your software and firmware if the problem has a documented solution within a software upgrade.
- If you have installed new hardware or software in your environment, check http://www.ibm.com/systems/info/x86servers/serverproven/compat/us/ to make sure that the hardware and software is supported by your IBM product.
- Go to http://www.ibm.com/supportportal/ to check for information to help you solve the problem.
- Gather the following information to provide to IBM Support. This data will help IBM Support quickly provide a solution to your problem and ensure that you receive the level of service for which you might have contracted.
  - Hardware and Software Maintenance agreement contract numbers, if applicable
  - Machine type number (IBM 4-digit machine identifier)
  - Model number
  - Serial number
  - Current system UEFI and firmware levels
  - Other pertinent information such as error messages and logs
- Go to http://www.ibm.com/support/entry/portal/Open_service_request/ to submit an Electronic Service Request. Submitting an Electronic Service Request will start the process of determining a solution to your problem by making the pertinent information available to IBM Support quickly and efficiently. IBM service technicians can start working on your solution as soon as you have completed and submitted an Electronic Service Request.

You can solve many problems without outside assistance by following the troubleshooting procedures that IBM provides in the online help or in the documentation that is provided with your IBM product. The documentation that comes with IBM systems also describes the diagnostic tests that you can perform. Most systems, operating systems, and programs come with documentation that

© Copyright IBM Corp. 2011, 2012

contains troubleshooting procedures and explanations of error messages and error codes. If you suspect a software problem, see the documentation for the operating system or program.

Using the documentation

Information about your IBM system and preinstalled software, if any, or optional device is available in the documentation that comes with the product. That documentation can include printed documents, online documents, readme files, and help files. See the troubleshooting information in your system documentation for instructions for using the diagnostic programs. The troubleshooting information or the diagnostic programs might tell you that you need additional or updated device drivers or other software. IBM maintains pages on the World Wide Web where you can get the latest technical information and download device drivers and updates. To access these pages, go to http://www.ibm.com/supportportal/. Also, some documents are available through the IBM Publications Center at http://www.ibm.com/shop/publications/order/.

Getting help and information from the World Wide Web

On the World Wide Web, up-to-date information about IBM systems, optional devices, services, and support is available at http://www.ibm.com/supportportal/. The address for IBM System x® information is http://www.ibm.com/systems/x/. The address for IBM BladeCenter® information is http://www.ibm.com/systems/bladecenter/. The address for IBM IntelliStation® information is http://www.ibm.com/systems/intellistation/.

How to send Dynamic System Analysis data to IBM

Use the IBM Enhanced Customer Data Repository to send diagnostic data to IBM. Before you send diagnostic data to IBM, read the terms of use at http://www.ibm.com/de/support/ecurep/terms.html.

You can use any of the following methods to send diagnostic data to IBM:

- **Standard upload:** http://www.ibm.com/de/support/ecurep/send_http.html
- **Standard upload with the system serial number:** http://www.ecurep.ibm.com/app/upload_hw
- **Secure upload:** http://www.ibm.com/de/support/ecurep/send_http.html#secure
- **Secure upload with the system serial number:** https://www.ecurep.ibm.com/app/upload_hw

Creating a personalized support web page

At http://www.ibm.com/support/mynotifications/, you can create a personalized support web page by identifying IBM products that are of interest to you. From this personalized page, you can subscribe to weekly email notifications about new technical documents, search for information and downloads, and access various administrative services.

Software service and support

Through IBM Support Line, you can get telephone assistance, for a fee, with usage, configuration, and software problems with your IBM products. For information about which products are supported by Support Line in your country or region, see http://www.ibm.com/services/supline/products/.

For more information about Support Line and other IBM services, see http://www.ibm.com/services/, or see http://www.ibm.com/planetwide/ for support telephone numbers. In the U.S. and Canada, call 1-800-IBM-SERV (1-800-426-7378).

Hardware service and support

You can receive hardware service through your IBM reseller or IBM Services. To locate a reseller authorized by IBM to provide warranty service, go to http://www.ibm.com/partnerworld/ and click **Find Business Partners** on the right side of the page. For IBM support telephone numbers, see http://www.ibm.com/planetwide/. In the U.S. and Canada, call 1-800-IBM-SERV (1-800-426-7378).

In the U.S. and Canada, hardware service and support is available 24 hours a day, 7 days a week. In the U.K., these services are available Monday through Friday, from 9 a.m. to 6 p.m.

IBM Taiwan product service

台灣 IBM 產品服務聯絡方式：
台灣國際商業機器股份有限公司
台北市松仁路 7 號 3 樓
電話：0800-016-888

IBM Taiwan product service contact information:
IBM Taiwan Corporation
3F, No 7, Song Ren Rd.
Taipei, Taiwan
Telephone: 0800-016-888

Appendix B. Notices

This information was developed for products and services offered in the U.S.A.

IBM may not offer the products, services, or features discussed in this document in other countries. Consult your local IBM representative for information on the products and services currently available in your area. Any reference to an IBM product, program, or service is not intended to state or imply that only that IBM product, program, or service may be used. Any functionally equivalent product, program, or service that does not infringe any IBM intellectual property right may be used instead. However, it is the user's responsibility to evaluate and verify the operation of any non-IBM product, program, or service.

IBM may have patents or pending patent applications covering subject matter described in this document. The furnishing of this document does not give you any license to these patents. You can send license inquiries, in writing, to:

IBM Director of Licensing
IBM Corporation
North Castle Drive
Armonk, NY 10504-1785
U.S.A.

INTERNATIONAL BUSINESS MACHINES CORPORATION PROVIDES THIS PUBLICATION “AS IS” WITHOUT WARRANTY OF ANY KIND, EITHER EXPRESS OR IMPLIED, INCLUDING, BUT NOT LIMITED TO, THE IMPLIED WARRANTIES OF NON-INFRINGEMENT, MERCHANTABILITY OR FITNESS FOR A PARTICULAR PURPOSE. Some states do not allow disclaimer of express or implied warranties in certain transactions, therefore, this statement may not apply to you.

This information could include technical inaccuracies or typographical errors. Changes are periodically made to the information herein; these changes will be incorporated in new editions of the publication. IBM may make improvements and/or changes in the product(s) and/or the program(s) described in this publication at any time without notice.

Any references in this information to non-IBM websites are provided for convenience only and do not in any manner serve as an endorsement of those websites. The materials at those websites are not part of the materials for this IBM product, and use of those websites is at your own risk.

IBM may use or distribute any of the information you supply in any way it believes appropriate without incurring any obligation to you.

Trademarks

IBM, the IBM logo, and ibm.com are trademarks of International Business Machines Corp., registered in many jurisdictions worldwide. Other product and service names might be trademarks of IBM or other companies. A current list of IBM trademarks is available on the web at “Copyright and trademark information” at http://www.ibm.com/legal/copytrade.shtml.

Adobe and PostScript are either registered trademarks or trademarks of Adobe Systems Incorporated in the United States and/or other countries.

© Copyright IBM Corp. 2011, 2012

Cell Broadband Engine is a trademark of Sony Computer Entertainment, Inc., in the United States, other countries, or both and is used under license therefrom.

Intel, Intel Xeon, Itanium, and Pentium are trademarks or registered trademarks of Intel Corporation or its subsidiaries in the United States and other countries.

Java and all Java-based trademarks and logos are trademarks or registered trademarks of Oracle and/or its affiliates.

Linux is a registered trademark of Linus Torvalds in the United States, other countries, or both.

Microsoft, Windows, and Windows NT are trademarks of Microsoft Corporation in the United States, other countries, or both.

UNIX is a registered trademark of The Open Group in the United States and other countries.

Important notes

Processor speed indicates the internal clock speed of the microprocessor; other factors also affect application performance.

CD or DVD drive speed is the variable read rate. Actual speeds vary and are often less than the possible maximum.

When referring to processor storage, real and virtual storage, or channel volume, KB stands for 1024 bytes, MB stands for 1,048,576 bytes, and GB stands for 1,073,741,824 bytes.

When referring to hard disk drive capacity or communications volume, MB stands for 1,000,000 bytes, and GB stands for 1,000,000,000 bytes. Total user-accessible capacity can vary depending on operating environments.

Maximum internal hard disk drive capacities assume the replacement of any standard hard disk drives and population of all hard disk drive bays with the largest currently supported drives that are available from IBM.

Maximum memory might require replacement of the standard memory with an optional memory module.

Each solid-state memory cell has an intrinsic, finite number of write cycles that the cell can incur. Therefore, a solid-state device has a maximum number of write cycles that it can be subjected to, expressed as “total bytes written” (TBW). A device that has exceeded this limit might fail to respond to system-generated commands or might be incapable of being written to. IBM is not responsible for replacement of a device that has exceeded its maximum guaranteed number of program/erase cycles, as documented in the Official Published Specifications for the device.

IBM makes no representation or warranties regarding non-IBM products and services that are ServerProven®, including but not limited to the implied warranties of merchantability and fitness for a particular purpose. These products are offered and warranted solely by third parties.

IBM makes no representations or warranties with respect to non-IBM products. Support (if any) for the non-IBM products is provided by the third party, not IBM.

Some software might differ from its retail version (if available) and might not include user manuals or all program functionality.

Particulate contamination

Attention: Airborne particulates (including metal flakes or particles) and reactive gases acting alone or in combination with other environmental factors such as humidity or temperature might pose a risk to the device that is described in this document. Risks that are posed by the presence of excessive particulate levels or concentrations of harmful gases include damage that might cause the device to malfunction or cease functioning altogether. This specification sets forth limits for particulates and gases that are intended to avoid such damage. The limits must not be viewed or used as definitive limits, because numerous other factors, such as temperature or moisture content of the air, can influence the impact of particulates or environmental corrosives and gaseous contaminant transfer. In the absence of specific limits that are set forth in this document, you must implement practices that maintain particulate and gas levels that are consistent with the protection of human health and safety. If IBM determines that the levels of particulates or gases in your environment have caused damage to the device, IBM may condition provision of repair or replacement of devices or parts on implementation of appropriate remedial measures to mitigate such environmental contamination. Implementation of such remedial measures is a customer responsibility.

Table 7. Limits for particulates and gases

Contaminant	Limits
Particulate	• The room air must be continuously filtered with 40% atmospheric dust spot efficiency (MERV 9) according to ASHRAE Standard 52.2[1]. • Air that enters a data center must be filtered to 99.97% efficiency or greater, using high-efficiency particulate air (HEPA) filters that meet MIL-STD-282. • The deliquescent relative humidity of the particulate contamination must be more than 60%[2]. • The room must be free of conductive contamination such as zinc whiskers.
Gaseous	• Copper: Class G1 as per ANSI/ISA 71.04-1985[3] • Silver: Corrosion rate of less than 300 Å in 30 days

[1] ASHRAE 52.2-2008 - *Method of Testing General Ventilation Air-Cleaning Devices for Removal Efficiency by Particle Size*. Atlanta: American Society of Heating, Refrigerating and Air-Conditioning Engineers, Inc.

[2] The deliquescent relative humidity of particulate contamination is the relative humidity at which the dust absorbs enough water to become wet and promote ionic conduction.

[3] ANSI/ISA-71.04-1985. *Environmental conditions for process measurement and control systems: Airborne contaminants*. Instrument Society of America, Research Triangle Park, North Carolina, U.S.A.

Documentation format

The publications for this product are in Adobe Portable Document Format (PDF) and should be compliant with accessibility standards. If you experience difficulties when you use the PDF files and want to request a web-based format or accessible PDF document for a publication, direct your mail to the following address:

Information Development
IBM Corporation
205/A015
3039 E. Cornwallis Road
P.O. Box 12195
Research Triangle Park, North Carolina 27709-2195
U.S.A.

In the request, be sure to include the publication part number and title.

When you send information to IBM, you grant IBM a nonexclusive right to use or distribute the information in any way it believes appropriate without incurring any obligation to you.

Telecommunication regulatory statement

This product may not be certified in your country for connection by any means whatsoever to interfaces of public telecommunications networks. Further certification may be required by law prior to making any such connection. Contact an IBM representative or reseller for any questions.

Electronic emission notices

When you attach a monitor to the equipment, you must use the designated monitor cable and any interference suppression devices that are supplied with the monitor.

Federal Communications Commission (FCC) statement

Note: This equipment has been tested and found to comply with the limits for a Class A digital device, pursuant to Part 15 of the FCC Rules. These limits are designed to provide reasonable protection against harmful interference when the equipment is operated in a commercial environment. This equipment generates, uses, and can radiate radio frequency energy and, if not installed and used in accordance with the instruction manual, may cause harmful interference to radio communications. Operation of this equipment in a residential area is likely to cause harmful interference, in which case the user will be required to correct the interference at his own expense.

Properly shielded and grounded cables and connectors must be used in order to meet FCC emission limits. IBM is not responsible for any radio or television interference caused by using other than recommended cables and connectors or by unauthorized changes or modifications to this equipment. Unauthorized changes or modifications could void the user's authority to operate the equipment.

This device complies with Part 15 of the FCC Rules. Operation is subject to the following two conditions: (1) this device may not cause harmful interference, and (2) this device must accept any interference received, including interference that may cause undesired operation.

Industry Canada Class A emission compliance statement

This Class A digital apparatus complies with Canadian ICES-003.

Avis de conformité à la réglementation d'Industrie Canada

Cet appareil numérique de la classe A est conforme à la norme NMB-003 du Canada.

Australia and New Zealand Class A statement

Attention: This is a Class A product. In a domestic environment this product may cause radio interference in which case the user may be required to take adequate measures.

European Union EMC Directive conformance statement

This product is in conformity with the protection requirements of EU Council Directive 2004/108/EC on the approximation of the laws of the Member States relating to electromagnetic compatibility. IBM cannot accept responsibility for any failure to satisfy the protection requirements resulting from a nonrecommended modification of the product, including the fitting of non-IBM option cards.

Attention: This is an EN 55022 Class A product. In a domestic environment this product may cause radio interference in which case the user may be required to take adequate measures.

Responsible manufacturer:
International Business Machines Corp.
New Orchard Road
Armonk, New York 10504
914-499-1900

European Community contact:
IBM Technical Regulations, Department M456
IBM-Allee 1, 71137 Ehningen, Germany
Telephone: +49 7032 15-2937
Email: tjahn@de.ibm.com

Germany Class A statement

Deutschsprachiger EU Hinweis:

Hinweis für Geräte der Klasse A EU-Richtlinie zur Elektromagnetischen Verträglichkeit

Dieses Produkt entspricht den Schutzanforderungen der EU-Richtlinie 2004/108/EG zur Angleichung der Rechtsvorschriften über die elektromagnetische Verträglichkeit in den EU-Mitgliedsstaaten und hält die Grenzwerte der EN 55022 Klasse A ein.

Um dieses sicherzustellen, sind die Geräte wie in den Handbüchern beschrieben zu installieren und zu betreiben. Des Weiteren dürfen auch nur von der IBM empfohlene Kabel angeschlossen werden. IBM übernimmt keine Verantwortung für die Einhaltung der Schutzanforderungen, wenn das Produkt ohne Zustimmung der IBM verändert bzw. wenn Erweiterungskomponenten von Fremdherstellern ohne Empfehlung der IBM gesteckt/eingebaut werden.

EN 55022 Klasse A Geräte müssen mit folgendem Warnhinweis versehen werden: “Warnung: Dieses ist eine Einrichtung der Klasse A. Diese Einrichtung kann im Wohnbereich Funk-Störungen verursachen; in diesem Fall kann vom Betreiber verlangt werden, angemessene Maßnahmen zu ergreifen und dafür aufzukommen.”

Deutschland: Einhaltung des Gesetzes über die elektromagnetische Verträglichkeit von Geräten

Dieses Produkt entspricht dem “Gesetz über die elektromagnetische Verträglichkeit von Geräten (EMVG)”. Dies ist die Umsetzung der EU-Richtlinie 2004/108/EG in der Bundesrepublik Deutschland.

Zulassungsbescheinigung laut dem Deutschen Gesetz über die elektromagnetische Verträglichkeit von Geräten (EMVG) (bzw. der EMC EG Richtlinie 2004/108/EG) für Geräte der Klasse A

Dieses Gerät ist berechtigt, in Übereinstimmung mit dem Deutschen EMVG das EG-Konformitätszeichen - CE - zu führen.

Verantwortlich für die Einhaltung der EMV Vorschriften ist der Hersteller:

International Business Machines Corp.
New Orchard Road
Armonk, New York 10504
914-499-1900

Der verantwortliche Ansprechpartner des Herstellers in der EU ist:

IBM Deutschland
Technical Regulations, Department M456
IBM-Allee 1, 71137 Ehningen, Germany
Telephone: +49 7032 15-2937
Email: tjahn@de.ibm.com

Generelle Informationen:

Das Gerät erfüllt die Schutzanforderungen nach EN 55024 und EN 55022 Klasse A.

VCCI Class A statement

この装置は、クラス A 情報技術装置です。この装置を家庭環境で使用すると電波妨害を引き起こすことがあります。この場合には使用者が適切な対策を講ずるよう要求されることがあります。 VCCI-A

This is a Class A product based on the standard of the Voluntary Control Council for Interference (VCCI). If this equipment is used in a domestic environment, radio interference may occur, in which case the user may be required to take corrective actions.

Korea Communications Commission (KCC) statement

이 기기는 업무용(A급)으로 전자파적합기기로서 판매자 또는 사용자는 이 점을 주의하시기 바라며, 가정외의 지역에서 사용하는 것을 목적으로 합니다.

This is electromagnetic wave compatibility equipment for business (Type A). Sellers and users need to pay attention to it. This is for any areas other than home.

Russia Electromagnetic Interference (EMI) Class A statement

ВНИМАНИЕ! Настоящее изделие относится к классу А.
В жилых помещениях оно может создавать радиопомехи, для снижения которых необходимы дополнительные меры

People's Republic of China Class A electronic emission statement

中华人民共和国“A类”警告声明

声 明

此为A级产品，在生活环境中，该产品可能会造成无线电干扰。在这种情况下，可能需要用户对其干扰采取切实可行的措施。

Taiwan Class A compliance statement

警告使用者:
這是甲類的資訊產品，在居住的環境中使用時，可能會造成射頻干擾，在這種情況下，使用者會被要求採取某些適當的對策。

Index

Numerics

0U PDU, installing in rear of rack 48
1U PDU
  installing in side of rack 46
  installing in side pocket of rack 47

A

accessible documentation 69
assistance, getting 63
attaching racks in a suite 38
attention notices 3

B

bolting rack to floor 21

C

cable channels, front-to-rear 50
cable tray, mounting 53
cable-access bar 51
cable-access covers
  adjusting 52
  removing 52
cable-access opening 52
cables, managing 49
cage nuts, installing 44
cage-nut-insertion tool 44
caps, removing from cable channel 50
caution statements 3
Class A electronic emission notice 70
clip nuts, installing 45, 47
console switch
  installing in side of rack 46
  installing in side pocket of rack 47
contamination, particulate and gaseous 69
CRU part numbers 61
cutting holes in floor tiles 11

D

danger statements 3
diagnostic data 64
documentation CD 1
documentation format 69
documentation updates, obtaining 1
door
  reversing front 31
door latch, removing 35
door, front
  installing and removing (9363-4CX, and 9363-4DX) 28
  installing and removing (7953, 9363-4AX, and 9363-4BX) 26
door, front *(continued)*
  installing and removing (9363-4PX and 9363-4EX) 25
door, rear
  installing and removing 30
doorstop
  installing 33
  removing 31
Dynamic System Analysis 64

E

electronic emission Class A notice 70

F

FCC Class A notice 70
floor layout, planning 11
floor tiles, cutting holes 11
front door
  installing and removing (9363-4CX, and 9363-4DX) 28
  installing and removing (7953, 9363-4AX, and 9363-4BX) 26
  installing and removing (9363-4PX and 9363-4EX) 25
front door, reversing 31
front stabilizer, installing 14, 19
front-to-rear cable channels 50
FRU part numbers 61

G

gaseous contamination 69
getting help 63

H

hardware service and support 65
help, getting 63
hinge pins
  installing 34
  removing 32

I

IBM Support Line 64
important notices 3
installing
  cage nuts 44
  clip nuts 45, 47
  devices vertically in rack 46
  devices with threaded rails 44
  doorstop 33
  front door (9363-4CX, and 9363-4DX) 29
  front door (7953, 9363-4AX, and 9363-4BX) 27
  front door (9363-4PX and 9363-4EX) 25

© Copyright IBM Corp. 2011, 2012

installing *(continued)*
front stabilizer 14, 19
hinge pins 34
optional devices 41
outriggers 12, 58
rear door 30
recirculation prevention plate 18
side covers 24
installing rack, tasks overview 1

M

managing cables 49
moving a rack 55

N

notes 3
notes, important 68
notices 67
electronic emission 70
FCC, Class A 70
notices and statements 3

O

optional devices, installing 41
outriggers, removing and installing 12, 58
overhead cable tray, mounting 53

P

particulate contamination 69
parts listing 59
planning floor layout 11
public services network, use in 70
public telecommunications network, connection to 70

R

rack
bolting to floor 21
moving 55
size and weight specifications 10
rack, installing tasks overview 1
rear door, installing and removing 30
recirculation prevention plate, installing 18
removing
door latch 35
doorstop 31
front door (9363-4CX, and 9363-4DX) 28
front door (7953, 9363-4AX, and 9363-4BX) 26
front door (9363-4PX and 9363-4EX) 25
hinge pins 32
outriggers 12
rear door 30
side covers 23
reversing front door 31

S

side covers, installing and removing 23
size and weight specifications of rack 10
software service and support 64
statements and notices 3
suite of racks, attaching 38

T

telephone numbers 65
threaded rails, installing devices with 44
trademarks 67

U

United States electronic emission Class A notice 70
United States FCC Class A notice 70

W

website
personalized support 64
publication ordering 64
support line, telephone numbers 65
weight and size specifications of rack 10

Part Number: 00D2506

Printed in USA

(1P) P/N: 00D2506