eNetwork Personal Communications
Version 4.2
for Windows 95 and Windows NT

Quick Beginnings

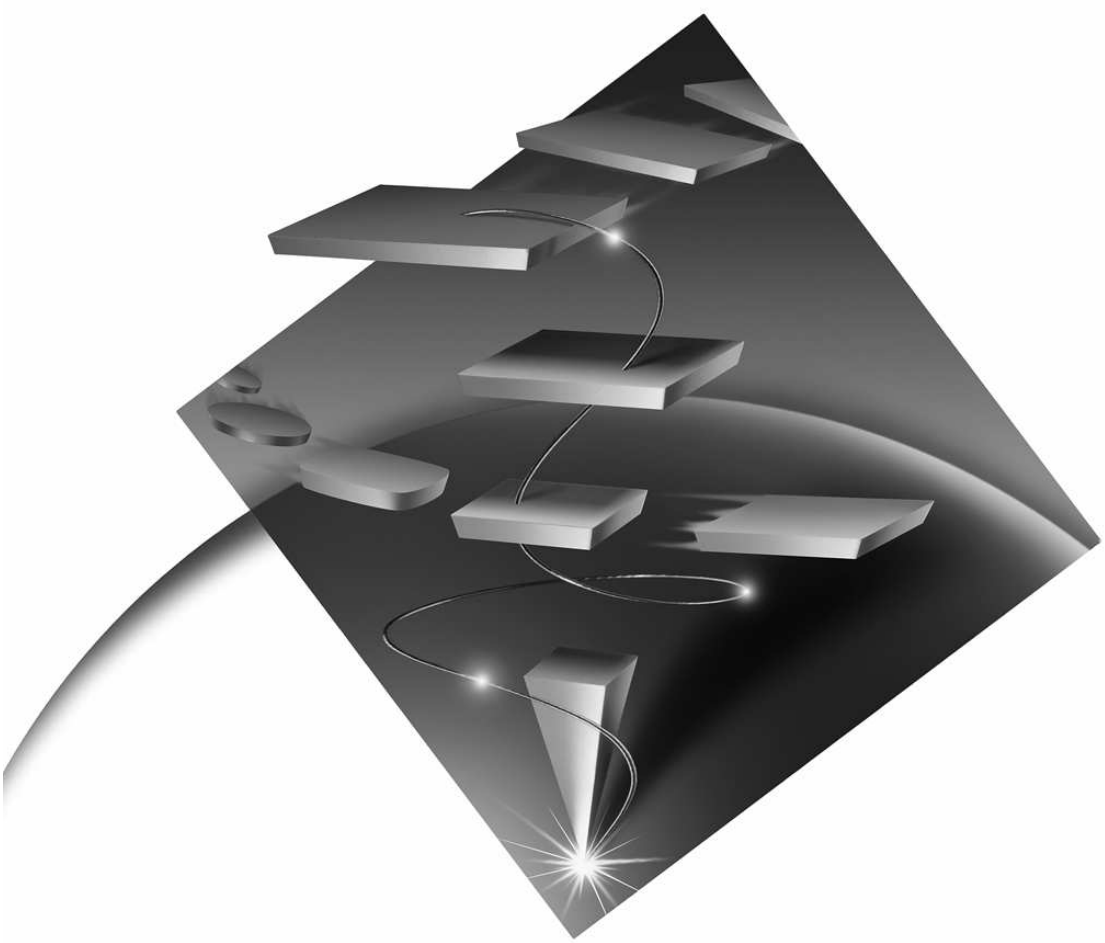

GC31-8476-00

eNetwork Personal Communications
Version 4.2
for Windows 95 and Windows NT

Quick Beginnings

GC31-8476-00

Note

Before using this information and the product it supports, be sure to read the general information under Appendix J, “Notices” on page 165.

First Edition (September 1997)

This edition applies to Version 4.2 of IBM eNetwork Personal Communications and to all subsequent releases and modifications until otherwise indicated in new editions or technical newsletters. Make sure you are using the correct edition for the level of the product.

Order publications through your IBM representative or the IBM branch office serving your locality. Publications are not stocked at the address below.

IBM welcomes your comments. A form for readers' comments may be provided at the back of this publication, or you may address your comments to the following address:

International Business Machines Corporation
Department CGMD
P.O. Box 12195
Research Triangle Park, North Carolina
27709-2195

When you send information to IBM, you grant IBM a nonexclusive right to use or distribute the information in any way it believes appropriate without incurring any obligation to you.

© **Copyright International Business Machines Corporation 1989, 1997. All rights reserved.**
Note to U.S. Government Users — Documentation related to restricted rights — Use, duplication or disclosure is subject to restrictions set forth in GSA ADP Schedule Contract with IBM Corp.

Contents

About This Book ix
Text Conventions Used in This Book ix
What's in the Packages x

Part 1. Introduction 1

Chapter 1. Welcome to Personal Communications 3
Personal Communications Program Icons 4
Administrative and Problem Determination (PD) Aids 4
Product Information 5
APPC and CPI-C Utilities 5
Emulator Utilities 6
Personal Communications Sessions 7
Personal Communications Connections 7
System/390 Emulator Connections 7
AS/400 Emulator Connections (SBCS only) 8
ASCII Emulator Connections (SBCS only) 9
S/3X Emulator Connections 9
Client/Server (Peer) Connections 10
APPN Networking 10
AnyNet 12
ActiveX/OLE 2.0 Support 12
Object-Oriented API 13
What's New in Personal Communications 4.2 for Windows 95 and Windows NT 13
Major Enhancements 14
Programming Enhancements 15
Database Enhancements 15
Connectivity Enhancements 15
Installation/Configuration Enhancements 17
Other Enhancements 17

Part 2. Planning for and Installing Personal Communications 19

Chapter 2. Planning to Install Personal Communications 21
Workstation Hardware 21
Workstation Hard Disk Requirements 21
Workstation Memory Requirements 22
Workstation Software 22

Chapter 3. Installing Personal Communications 23
Types of Installation 23
Considerations Before Installing 23
National Language Support (NLS) Considerations 24
Microsoft SNA Client, NetWare for SAA, Communications Server, and Communications Server SNA API Client Installation Considerations 24
Considerations for Coexistence with NetWare 25
Using a Workstation with Multiple Operating Systems 25
Starting to Install Personal Communications from Your CD-ROM 26
Workstation Installation 27

© Copyright IBM Corp. 1989, 1997

Network Installation 29
Migrating from Personal Communications for Windows 3.x 30
Modem definition files are not migrated 30
Migration Considerations 31
Manually Running the CFGWIZ Migration Tool 32
Removing a Previous Version of Personal Communications for the Windows 3.x Environment 32
Keeping a Windows V3.x Version of Personal Communications 33
Removing Personal Communications 33
Removing Personal Communications from a Workstation 33
Removing Personal Communications for Windows NT or Windows 95 from a Network Server 34
Removing the IBM BookManager Library Reader 34
Creating Personal Communications Installation Diskettes from Your CD-ROM 35
Installing Personal Communications from Diskette 35
Installing Personal Communications Using the Silent Installation Option 35
Recording and Using Your Own Response File 36
Checking the Logs 36

Chapter 4. Configuring Sessions 37
Creating a Configuration 37
Saving Configuration Information 39
Saving an SNA Configuration 39
Saving a Workstation Profile 39
Changing Configuration Information 40
Changing an SNA Configuration 40
Changing a Workstation Profile 41

Part 3. Using Personal Communications 43

Chapter 5. Starting and Stopping Emulator Sessions 45
Starting Sessions 45
Starting by Selecting the Session Icon 45
Starting from a Session Window 46
Starting a Workstation Profile from the Run Command Line 46
Starting Multiple Sessions 46
Creating a Batch File 47
Using a Batch File 49
Editing an Existing Batch File 49
Starting Multiple Sessions without a Batch File 50
Automatically Starting Sessions 50
Stopping Sessions 51

Chapter 6. Using Emulator Sessions 53
Printing 53
Using the Windows Printer Driver 53
Using Printer Definition Table (PDT) Files 53
Scalable (Truetype) APL-Font Support on Printers 54
ZipPrint (PC/3270 Only) 54
Preparing to Use ZipPrint 54
Starting ZipPrint 55
Using ZipPrint 55
IBM 5586-H02 Printer (Japanese Only) 55

Editing . . . 55
Editing by Linking to Windows Application Programs . . . 56
Copying Table Data to a Spreadsheet . . . 57
Input Method Editor (Japanese Only) . . . 60
DBCS IME Auto-Start Hidden Switch (DBCS only) . . . 60
DOS GAIJI Files (Japanese Only) . . . 60
Using the User Font Defined on AS/400 (Japanese Only) . . . 60
Example . . . 61
What Is Different from Windows 3.1 . . . 62
Transferring Files . . . 62
ASCII Host File Transfer . . . 63
Getting Help . . . 64
Setting Up a Session Window's Appearance . . . 64
Tool Bar Setup . . . 65
Showing or Hiding the Menu Bar and Tool Bar . . . 65
Windows Setup . . . 65
Getting Help . . . 66
Setting Up and Using the Assist Functions . . . 66
Keyboard, Macro and Script Functions . . . 66
CM Mouse (Single Byte Character Set) . . . 67
Hotspots Setup . . . 67
Using Hotspots . . . 67
Keyboard Setup . . . 68
Pop-Up Keypad Setup . . . 69
Mouse Setup . . . 70
Macro/Script Setup . . . 71
Web Browser Setup . . . 73
Tab Setup . . . 73
Managing Emulator Sessions . . . 73
Getting Help . . . 74

Chapter 7. Emulator Utilities . . . 75
Data Transfer . . . 75
32-bit ODBC Administrator . . . 76
Database Access . . . 77
CM Mouse . . . 77
Menu-Bar-Customization . . . 78
Multiple Sessions . . . 78
ZipPrint . . . 78

Chapter 8. AS/400 Emulator Utilities . . . 79
PC Organizer . . . 79
Starting the PC Organizer . . . 79
Getting Help . . . 80
Text Assist (SBCS Only) . . . 80
Text Assist Key Functions . . . 81
AS/400 Network Drives (Shared Folders) . . . 82
Setting Up AS/400 Network Drives . . . 82
Assigning (Mapping) Drives . . . 82

Chapter 9. Enabling Client/Server Applications . . . 85
Configuring a Node . . . 85
Starting the SNA Node . . . 86
Stopping the SNA Node . . . 86

APING Requirements 87

Chapter 10. Where to Find More Information 89
Online Help 89
How to Use Online Help 89
Messages 89
Page Fault Messages 89
OIA Messages 90
Personal Communications Library 90
Related Publications 90
Contacting IBM 91
Statement of Service 91
Reporting Defects 92
Other Ways to Contact IBM 95

Appendixes 97

Appendix A. Directories and System File Modifications 99
Directories Created by the Installation Program 99
PRIVATE Subdirectory 99
SAMPLES Subdirectory 99
PDFPDT Subdirectory 100
ECL Subdirectory 100

Appendix B. Attachment Considerations 101
COAX Attachment 101
Avoiding Machine Check 207 101
Polling Feature 101
Functions Not Available with DFT Attachment 102
PCMCIA Configuration for a DFT Attachment 102
LAN via IEEE 802.2 Attachment 102
PIU Size 103
Receive Window Count 103
Using a PCMCIA Token-Ring or Ethernet Card 103
TCP/IP Connection 103
TCP/IP Protocol Driver 103
Restrictions 103
Screen Size 103
Terminal Type to Be Negotiated With TN3270 104
Considerations for Telnet3270, TN3287, and TN3270E Connection 104
SDLC MPA Attachment 105
Advantis (IIN) Attachment 107
Line Speed 107
IBM Global Network Connection Attachment 107
Line Speed 107
Functions Not Available with the IBM Global Network Connection 107
Home3270 Attachment 107
Setting the Screen Colors in a Home3270 Session 107
3270 Attachment via the AS/400 System 108
AS/400 System Setup 109
Error Messages from the AS/400 System 109
IBM PC720 Modem Initialization (Japan Only) 109
Practical Peripherals 14400MT Modem Considerations 109

Twinax Attachments . . . 110
IBM SDLC PCMCIA Adapter and Modem (Japan Only) . . . 110
IBM SDLC PCMCIA Adapter . . . 111
IBM SDLC PCMCIA Modem . . . 111
SDLC Attachment and IBM 7852 Modems . . . 111
WAC Attachments . . . 111
EIB Support . . . 111
Supported Adapters . . . 111
Potential Configuration Issues . . . 112
System Resources . . . 112
3174 Peer Communications Support (Lan over Coax) . . . 112
Installation . . . 113
Configuration . . . 113
Multiple Adapter Coexistence . . . 113
Twinaxial Console . . . 114
Asynchronous Console . . . 114

Appendix C. Adapter Setup Hints and Tips . . . 115
Using Coax (3270) Adapters . . . 115
3278/79 Emulation Adapter (AT-Bus) . . . 115
IBM 3270 Connection Adapter (Micro Channel) . . . 115
PCMCIA Adapter (PC Card) . . . 115
3270 ISA-Bus and MCA Adapters and ROM Shadowing . . . 116
OEM Adapters . . . 116
Using Twinax (5250) Adapters . . . 116
AT-Bus Adapters . . . 116
Micro Channel (MCA) and PCI Adapters . . . 116
IBM 5250 PCI Emulator Adapter . . . 117

Appendix D. AS/400 Configuration Examples . . . 119
AS/400 Device Description . . . 119
5250 Sessions through One Link . . . 120
AS/400 System Mode Description . . . 121
AS/400 Device Description for Twinaxial Attachments (APPC) Example . . . 122
AS/400 Device Description for Asynchronous Attachment Example . . . 123
AS/400 VT Asynchronous Attachment Example . . . 127
AS/400 Configuration for SDLC Example . . . 129
Network Attributes . . . 129
SDLC Leased Configuration . . . 131
Creating a SDLC Line Description . . . 131
SDLC Controller Description . . . 132
SDLC Switched Configuration . . . 133
SDLC Line Description . . . 134
SDLC Controller Description . . . 135
LAN Configuration Example . . . 137
LAN Controller Description . . . 137

Appendix E. AnyNet Configuration Examples . . . 139
Example 1. 5250 Emulation Over a TCP/IP Network . . . 139
Steps . . . 139
Example 2. Running APPC or CPI-C Applications over a TCP/IP Network . . . 140
Steps . . . 140
Example 3. APPC3270 Emulation over a TCP/IP Network . . . 142
Steps . . . 142

Example 4. 3270 Emulation via DLUR over a TCP/IP Network 143
Steps 143
Example 5. 3270 Emulation over a TCP/IP Network via an SNA Gateway to a VTAM Host on an SNA Network 144
Steps 144
Example 6. 3270 Emulation via an SNA Gateway over a TCP/IP Network . . 145
Steps 145
Example 7. 3270 Emulation over a TCP/IP Network via an AnyNet SNA/IP Gateway to a VTAM Host on an APPN Network 146
Steps 146
Example 8. 3270 Emulation from a Windows NT Workstation and a Windows 95 Workstation on Different IP Networks 147
Steps 148

Appendix F. Configuring Multiple Links 151
Configuring a Second 3270 Emulation Link 151
Configuring a Second 5250 Emulation Link 152
Configuring a Second Link of a Different Kind 152

Appendix G. Default Key Function Assignments 153
Default Key Functions for a 3270 Layout 153
Default Key Functions for a 5250 Layout 155
Default Key Functions for the Combined Package 157
Default Key Functions for the VT Emulator Layout 158

Appendix H. Configuring Your Workstation for Thai, Arabic or Hebrew 161
Configuring for Thai 161
Configuring for Arabic or Hebrew 161
File Transfer 162
Data Transfer for Arabic 162

Appendix I. API Client Attachments 163
Communications Server for Windows NT and NetWare for SAA 163
Support for Communications Server/NT 163
Support for NetWare for SAA 163
NetWare Coexisting with LAN 163

Appendix J. Notices 165

Appendix K. Trademarks 167

Glossary 169

Index 183

About This Book

This book describes how to install, configure, and start Personal Communications. After you get Personal Communications up and running and begin to perform various tasks, use the online help whenever you need additional information. Refer to Chapter 10, “Where to Find More Information” on page 89 for information about online help, the Personal Communications library, and related publications. Refer to the glossary on page 169 for definitions of technical terms used throughout this book.

This book is for users of:

IBM eNetwork Personal Communications V4.2 for Windows 95 and Windows NT

IBM eNetwork Personal Communications AS/400 V4.2 for Windows 95 and Windows NT.

See “What’s in the Packages” on page x for information regarding what is in each package.

The windows in this book are representative of ones that you might see while working with Personal Communications. Minor variations could occur between what you see on your display and what is in the book.

In this book, Windows** refers to either Windows 95 or Windows NT**. When information is specific to only Windows 95 or to a specific version of Windows NT (V3.51 or V4.0), this will be indicated in the text.

Text Conventions Used in This Book

This book uses the following text conventions:

UPPERCASE	Uppercase indicates commands, program keywords, and default values. You can enter these values in uppercase or lowercase.
Bold	Bold type indicates the names of window controls, such as lists, check boxes, entry fields, menu choices, and push buttons.
Italics	Italics indicate: Special emphasis in text or a reference citation. Variables that you supply a value for.
Example type	Example type indicates information that the user is instructed to type at a command prompt or in a window.

This book also uses *icons* (pictures) in the text to help you find different types of information.

This icon represents a note, important information that can affect the operation of Personal Communications or the completion of a task.

© Copyright IBM Corp. 1989, 1997

This icon represents a tip or additional information that can help you complete a task.

What's in the Packages

Personal Communications V4.2 provides two different CD-ROM package options. The packages are:

1. A CD-ROM (V4.2) containing *IBM eNetwork Personal Communications for Windows 95 and Windows NT* which provides 5250, 3270, and VT emulation and connections to AS/400, S390, ASCII, and S/3X host systems.
2. A CD-ROM (V4.2) containing *IBM eNetwork Personal Communications AS/400 for Windows 95 and Windows NT* which provides 5250 and VT emulation and SNA connections to remote systems.

The information in this book applies to both packages.

In addition to the products previously mentioned, both CD-ROMs contain the following:

Certain corequisite products to use with the Personal Communications product

IBM Library Reader to enable you to read softcopy books available on the CD

Book files in PostScript** format (*.PS), which allow you to print the books shipped with the products

Personal Communication products for other platforms such as OS/2, DOS, and Windows V3.1.

Note

Images of Personal Communications installation diskettes can be created from the product CD.

Part 1. Introduction

© Copyright IBM Corp. 1989, 1997

Chapter 1. Welcome to Personal Communications

Personal Communications brings the power of personal networking to your workstation by exploiting the networking capabilities to provide a variety of connectivity options supporting local area network (LAN) and wide area network (WAN) environments. Whether it's for host terminal emulation, client/server applications, or connectivity, Personal Communications offers a robust set of communications, networking, and administrative features.

Personal Communications is a full-function emulator. In addition to host terminal emulation, it provides these useful features:

File transfer
Dynamic configuration
An easy-to-use graphical interface
APIs for SNA-based client applications
An API allowing TCP/IP-based applications to communicate over an SNA-based network.

A variety of SNA-based client application programming interfaces (APIs) are supported by Personal Communications. You can create applications that use the peer-to-peer client APIs, which are based on LU 6.2 and provided by Personal Communications. These APIs let you simultaneously access and process information on peer workstations.

Personal Communications supports Advanced-Peer-to-Peer Networks (APPN) as an end node, and uses the advanced network features: high performance routing (HPR) and dependent LU requester (DLUR).

AnyNet SNA over TCP/IP is a feature of Personal Communications which allows emulator and client/server SNA applications to communicate over a TCP/IP network.

The AnyNet Sockets over SNA access node function enables TCP/IP application programs using the WinSock 1.1 or WinSock 2.0 socket interface to communicate over an SNA network.

Personal Communications V4.2 provides many enhancements. The major enhancements are:

1. Support for VT52, VT100, and VT220 terminal emulation, and for ASCII host file transfer.
2. ActiveX/OLE 2.0 support, which allows Personal Communications to be included as an embedded object within another program (a container); in this way, all of the functions of Personal Communications become available within the confines of the container program.
3. Open Data Base Connectivity (ODBC) and Distributed Relational Database Architecture (DRDA) provide interfaces that allow applications to access and update data from many sources using Structured Query Language (SQL) as a standard for accessing data.
4. A Database Access utility that provides access to data via ODBC drivers.

© Copyright IBM Corp. 1989, 1997

Refer to “What’s New in Personal Communications 4.2 for Windows 95 and Windows NT” on page 13 for a complete list of the new enhancements for Personal Communications 4.2.

Personal Communications Program Icons

When you have installed Personal Communications, the main functions that you can use are displayed as icons. On Windows NT 3.51, all the icons are visible in the program group; on Windows 95 and Windows NT 4.0, some are grouped in subfolders.

A brief explanation of each function follows:

Start or Configure Session

Use this icon to start or configure new emulator sessions. During configuration, you can specify the session type, screen size, LU number, graphics support, the type of communications link and its parameters, as well as other information. You can save all this information in a workstation profile. After saving, you can start the session by just clicking the session icon.

SNA Node Configuration

Use this icon to configure an SNA node and associated resources or to change advanced configuration parameters. Although most emulator sessions can be configured without the use of this utility, you will need to create an SNA node configuration to enable client/server and peer communications.

Administrative and Problem Determination (PD) Aids

Display SNA Sense Data

Use this icon to display SNA sense data and associated explanations. Sense data is SNA error information located in internal SNA flows, error logs, error messages, and traces. Some Personal Communications error messages include sense data.

Log Viewer

Use this icon to view the Personal Communications message log. Personal Communications logs errors and informational messages during initialization and operation.

SNA Node Operations (systems management)

Use this icon to perform SNA node operations, such as starting or stopping resources or displaying resource information.

SNA Node Verification

Use this icon to verify that the ASCII editing changes that you have manually made to the SNA node configuration data are valid.

Trace Facility

Use this icon to turn trace functions on and off and to capture communication-protocol information that passes between your workstation and other host systems. You can use traces to resolve communication problems.

Uninstall

Use this icon to remove the Personal Communications product for Windows NT V3.51. On Windows 95 and Windows NT V4.0, this icon is not available; instead use the Add/Remove program utility provided by the operating system to uninstall Personal Communications.

Product Information

Readme-Please! The Readme file includes important information that became available too late to be included in this book or that might be of special interest.

Manuals

You can install the following books so they can be available online to you; however, before you can view them, you must first install IBM Library Reader (as described on page 26).

- *Quick Beginnings* This book, which you are now reading, describes how to install, configure, and start Personal Communications.
- *Reference* This book contains reference information that you might need when installing or using Personal Communications.
- *Emulator Programming* This book provides necessary programming information for you to use the IBM Personal Communications Emulator High-Level Language Application Program Interface (EHLLAPI), Dynamic Data Exchange (DDE), Personal Communications API (PCSAPI), and Server-Requester Programming Interface (SRPI).
- *Client/Server Communications Programming* This book describes support for the APPC and LUA application programming interfaces (APIs).
- *System Management Programming* This book describes how to use the Node Operations Facility (NOF) application programming interface (API).
- *CM Mouse Support User's Guide and Reference* This book describes how to use the CM Mouse interface.
- *Emulator Class Library* This book describes how to write an ActiveX/OLE 2.0 compliant application to use Personal Communications as an embedded object.

APPC and CPI-C Utilities

Note

These utilities are available in U.S. English only.

THESE PROGRAMS ARE PROVIDED ON AN AS-IS BASIS WITHOUT ANY WARRANTY OF ANY KIND, INCLUDING THE WARRANTIES OF MERCHANTABILITY AND FITNESS FOR A PARTICULAR PURPOSE WHICH ARE EXPRESSLY DISCLAIMED.

Check Connection (APING)
Use this sample CPI-C program to verify network connections. You can use APING to establish network connections, diagnose problems, and take simple performance measurements. APING exchanges data packets with a partner computer and measures how long the data transfer takes.

Transfer File (AFTP)
Use this program to provide a fast and efficient transfer of text and binary files.

Emulator Utilities

Data Transfer (PC400 only)
Use this icon to transfer data between a workstation and an AS/400 database.

Menu-Bar Customization Utility
Use this icon to customize the menu bar in the session window.

Multiple Sessions
Use this icon to create batch files (*.BCH), which specify multiple emulator sessions (workstation profiles) or other Windows 95 or Windows NT programs that you want to start concurrently. You can create an icon for each batch file and start the programs just by clicking the icon.

ZipPrint (PC/3270 only)
Use this icon to start the ZipPrint program, which allows you to print host system files or screens, PROFS or OfficeVision notes, calendars, and documents, CMS files, and XEDIT workspaces. When started, ZipPrint adds an item to the menu bar of the session window.

CM Mouse
Use this icon to define mouse buttons to perform any sequence of host keystrokes, including PF keys and special emulator control keys. You can also build pop-up menus to control host applications without making any changes to those host programs.

Note

CM Mouse is valid for single-byte character set (SBCS) languages only.

32-bit ODBC Administrator
Use this icon to open a window where you can add, delete, or configure data sources, or install new open database connectivity (ODBC) drivers. ODBC is an industry standard defined by the Microsoft Corporation for database connectivity.

Database Access
Use this icon to start the Database Access utility that lets you retrieve data from a database, such as an SQL server, Microsoft Excel, Lotus 1-2-3, or dBASE

database (that complies with Microsoft ODBC standards, Level 1). You can then directly pass the retrieved data to Excel, Lotus 1-2-3, and other applications.

DOS EHLLAPI
Use this icon to enable or disable DOS-Based EHLLAPI programs that communicate with the 32-bit Personal Communications emulator.

Personal Communications Sessions

The sessions that Personal Communications provides are logical connections enabling communication between your workstation and a host system. The following session types are available:

Display session
Use your workstation as a display terminal connected to the host system.

Printer session
Use your workstation printer as a host system printer.

Client/server session
Establish connections that allow peer communications using CPI-C and APPC (LU 6.2).

Personal Communications Connections

Personal Communications supports a variety of connections to the following host systems. Following are the icons and text you will encounter when you begin to configure an emulator session:

System/390 Emulator Connections

Interface	Attachment
LAN	LAN via IEEE 802.2 LAN via NetWare** for SAA (IPX**/SPX) Telnet3270 3270 via AS/400 (passthru) APPC3270 via LAN Microsoft SNA client (using the FMI interface) Microsoft SNA client (using the LUA interface) Microsoft SNA client (using the APPC interface) Dependent LU Requester (DLUR) VT over Telnet (TCP/IP)
COAX	SNA Distributed Function Terminal Non-SNA Distributed Function Terminal 3174 Peer Communication

Interface	Attachment
COM port	SNA-over-Async IBM Global Network Connection (not in Japan) Home3270 Advantis** (IIN) Dependent LU Requester (DLUR) via SNA-over-Async Hayes AutoSync Hayes** AutoSync APPC3270 via: SNA-over-Async Hayes AutoSync VT over Async VT over Telnet (TCP/IP) X.25 Hayes AutoSync X.25 DLUR via Hayes AutoSync X.25 APPC3270 via Hayes AutoSync
5250	3270 via AS/400 Dependent LU Requester (DLUR)
SDLC	Synchronous Data Link Control 3270 via AS/400 (passthru) APPC3270 via SDLC Dependent LU Requester (DLUR)
AnyNet	LU 0, 1, 2, 3 APPC3270 LU 0,1,2,3 via DLUR
IBM WAC	Synchronous Data Link Control 3270 via AS/400 (passthru) APPC3270 via SDLC Dependent LU Requester (DLUR) X.25 Qualified Logical Link Control X.25 3270 via AS/400 APPC3270 via X.25 X.25 DLUR
API Client	NetWare for SAA client Communications Server client Communications Server
OEM	Synchronous Data Link Control 3270 via AS/400 (passthru) APPC3270 via SDLC Dependent LU Requester (DLUR)

AS/400 Emulator Connections (SBCS only)

Interface	Attachment
LAN	LAN via IEEE 802.2 Telnet5250 (TCP/IP) Telnet5250 (IPX/SPX) VT over Telnet Microsoft SNA client (using the APPC interface)

Interface	Attachment
5250	Twinaxial Data Link Control (APPC) Twinaxial Data Link Control (Console)
COM port	SNA-over-Async Hayes AutoSync SNA-over-Async (console) VT over Async VT over Telnet X.25 Hayes AutoSync
SDLC	Synchronous Data Link Control (MPA)
AnyNet	5250
IBM WAC	Synchronous Data Link Control (WAC)
API Client	Netware for SAA client Communications Server client Communications Server
OEM	Synchronous Data Link Control (MPA)

ASCII Emulator Connections (SBCS only)

Interface	Attachment
LAN	VT over Telnet (TCP/IP)
COM port	VT over Async VT over Telnet (TCP/IP)

S/3X Emulator Connections

Interface	Attachment
5250	Twinaxial Data Link Control (console)

Client/Server (Peer) Connections

Personal Communications provides APPN end node support for workstations, allowing them to communicate more flexibly with other systems in the network.

When your workstation is defined as an APPN end node, an APPN network node server provides the following directory and routing services for your workstation:

Intermediate session routing
Directory services
Topology and route selection services

Using Personal Communications, you can establish client/server connections to a variety of computers and to workstations running OS/2, Windows 3.x, Windows 95, or Windows NT. Another option is to connect the computers to a workstation running Communications Server. Available SNA client/server connection types are:

LAN via IEEE 802.2
Synchronous Data Link Control
SNA-over-Async
AnyNet SNA over TCP/IP
Hayes AutoSync
Advantis (IIN)
Twinaxial Data Link Control (APPC)
X.25
OEM Deep adapter
WAC

APPN Networking

Advanced Peer-to-Peer Networking (APPN) is the underlying networking protocol that routes APPC traffic through intermediate nodes in the network. For instance, when Program A uses APPC to talk to Program B, APPN finds the node where Program B is located and directs the APPC traffic through the network.

APPN includes several features that help reduce the amount of configuration required to set up and maintain a network. These features automate many tasks that are time consuming, complicated, and error prone. For example, if you're installing a new workstation that uses APPN, you don't have to set up configuration information for every workstation you want to communicate with. You simply provide the name of the computer and the address of the intermediate node that handles your traffic. APPN takes care of the rest of the information needed to route APPC traffic to and from your workstation.

If you connect to an APPN network, you simplify your own configuration and make it easier for other computers in the network to find you.

See “SNA Client/Server Concepts” in the *Personal Communications Reference* manual for more information.

APPC

Advanced program-to-program communication (APPC), also known as LU 6.2, is software that enables high-speed communications between programs on different computers, from portables and workstations to midrange and host computers. APPC software is available for many different operating systems, either as part of the operating system or as a separate software package.

APPC is a communications protocol that enables programs on different computers to “talk to” each other. APPC provides the interface between the programs and the networking hardware and software and defines the rules that programs use to exchange information.

APPC serves as an interface between application programs and the network. When the communications application on your workstation passes information to the APPC software, APPC takes the information and sends it on to a network interface, such as a Token-Ring adapter card. The information travels across the network to another computer, where the APPC software receives the information from the network interface. APPC puts the information back into its original format and passes it to the corresponding communications application.

See “SNA Client/Server Concepts” in the *Personal Communications Reference* manual for more information.

APPN Network

By participating in an APPN network, Personal Communications workstations can also take advantage of two additional functions:

High-performance routing
Dependent LU requester

High-Performance Routing (HPR): Personal Communications supports high-performance routing (HPR) over token-ring and Ethernet connections, which increases data routing performance and reliability. HPR supports the rapid transport protocol to provide nondisruptive rerouting around network outages, efficient selective retransmission, and end-to-end data integrity and congestion control.

Dependent LU Requester (DLUR): DLUR allows dependent LUs (LU 0, 1, 2, 3, and dependent LU 6.2) to benefit from an APPN network. It supports dynamic and multiple paths through the network and eliminates the need for dependent LUs (or their gateway) to be adjacent to the VTAM host.

A DLUR is an APPN end node or network node that owns dependent LUs, but requests that a dependent LU server (DLUS) provide the system services control point (SSCP) for those dependent LUs. A DLUS controls conversion from a subarea environment to an APPN environment, allowing you to maintain central management of remote dependent LUs while benefiting from an APPN network.

Personal Communications uses the support in VTAM V4R2 for dependent LUs through APPN networks and combined subarea and APPN networks. The dependent LU server function (in VTAM) provides dependent secondary logical unit (SLU) support by establishing an LU 6.2 session between a dependent LU requester node (DLUR), and a dependent LU server node (DLUS).

See “SNA Client/Server Concepts” in the *Personal Communications Reference* manual for more information.

AnyNet

AnyNet allows any application to communicate over any networking protocol and to extend the reach of applications over multiple networks. Using AnyNet function, you can reduce the number of installed network protocols and reduce operational complexity without modifying your existing applications or hardware. Personal Communications includes AnyNet SNA over TCP/IP support, which allows SNA emulator and client/server applications to communicate over a TCP/IP network.

Refer to “Introducing AnyNet SNA Over TCP/IP” in the *Personal Communications Reference* manual for more basic information about AnyNet.

Personal Communications also includes AnyNet Sockets over SNA support, which enables TCP/IP application programs using the WinSock 1.1 or WinSock 2.0 socket interface to communicate over an SNA network. For more information, refer to “AnyNet Sockets over SNA” in the *Personal Communications Reference.*

Refer to Appendix E, “AnyNet Configuration Examples” on page 139 for examples of how to set up AnyNet connections.

ActiveX/OLE 2.0 Support

Personal Communications V4.2 sessions can now be included as part of a compound document. A compound document is a document that appears to be a single unit, but which is in fact made up of information from more than one program. For example, a compound document could include data that allows Personal Communications to execute within the context of the spreadsheet program.

When included as part of another program, Personal Communications is known as an embedded or linked object and the program is known as a container. Personal Communications supports ActiveX/OLE 2.0 compliant containers such as Lotus Notes, Lotus Word Pro, and Microsoft Word. For most containers you can embed an object by using a menu sequence (for example, in MS Word, use **Insert**, then **Object**), or by dragging and dropping a workstation profile into the document.

As an embedded object, Personal Communications can change its appearance to be part of the container program, providing the container program allows this change to occur. Or, Personal Communications can be started so that it runs in its own separate window utilizing its own profile and screen displays.

There is a variety of ways that Personal Communications can be activated as an embedded object. For example, Personal Communications can be shown as an icon within another program, and be activated by double-clicking. Another way Personal Communications can be activated is through a script; Visual Basic or Lotus Script are examples of scripting languages supported by Personal Communications, but any ActiveX/OLE automation scripting language can be used.

The use of scripts allows Personal Communications to be activated as a part of an automation request. For example, a script can be written to automatically start Personal Communications every time the container object is started, or a script can be used to automatically put data on host entry screens.

The Personal Communications session ends when the container is closed or when you close the Personal Communications window. If Personal Communications was actuated as a linked object, it must be closed separately.

Object-Oriented API

Personal Communications provides a new language-independent object-oriented API. There are seven objects that can be used in conjunction with Visual Basic, Lotus Script, WordPro, or any ActiveX/OLE automation scripting language to produce compound documents where Personal Communications is an embedded object within another program.

If you are interested in writing an application that includes Personal Communications as an object within your ActiveX/OLE 2.0 compliant program, refer to the *Personal Communications Emulator Class Library* programming manual. This manual describes the objects that Personal Communications provides and describes what you need to do to access the Personal Communications data. Information is provided for programmers using Visual Basic scripts, Lotus scripts, and the C++ programming language. Samples of Visual Basic and Lotus scripts are provided on the Personal Communications CD.

What's New in Personal Communications 4.2 for Windows 95 and Windows NT

The following table compares the features available under Windows 95 and under Windows NT. When "V4.1" appears in a row in the table, it means that this function was available in Personal Communications Version 4.1 for the specified operating system.

Table 1 (Page 1 of 2). Comparison of New Items in Windows 95 and in NT

Enhancement Item	Windows 95	Windows NT
Major Enhancements		
ActiveX/OLE 2.0 support	X	X
ASCII host file transfer and VT emulation	X	X
Programming Enhancements		
DOS EHLLAPI	X	X
Emulator Class Library	X	X
Lotus Scripting	X	X
REXX EHLLAPI Support	X	X
VB Scripting	X	X
Database Enhancements		
DataBase Access	X	X
ODBC and DRDA	X	X
Connectivity Enhancements		
3174 Peer Communication (LAN over COAX)	X	X
AnyNet SNA over TCP/IP	X	V4.1
AnyNet Sockets over SNA	X	X

Table 1 (Page 2 of 2). Comparison of New Items in Windows 95 and in NT		
Enhancement Item	**Windows 95**	**Windows NT**
APPC/CPI-C Full Duplex	X	X
Asynchronous Console (5250)	X	X
Backup Server/Host Connection (telnet)	X	X
Hayes AutoSync	X	V4.1
IBM SDLC PCMCIA adapter/modem (Japan only)	X	X
ISDN via Existing COM port	X	X
NetWare and CS/NT Client Support	X	V4.1
Network Drives (shared folders)	X	X
Additional Twinax Adapters	X	X
TN5250 over IPX/SPX Socket	X	X
Twinax Console	X	X
S/3X (twinax)	X	X
WAC	X	V4.1
X.25	X	X
Installation/Configuration Enhancements		
ASCII SNA configuration files	X	X
Unattended Install of IEEE 802.2 Driver (LLC2)	X	X
Systems Management Server (SMS) installation	X	X
Other Enhancements		
Command line start and stop of the SNA node	X	X
Internet/Intranet Hotspots	X	V4.1
Programmed Symbol Set graphics	X	X
New code pages	X	X
SNA data compression	X	X

The following sections briefly describe each new Personal Communications function listed in the table above.

Major Enhancements

ActiveX/OLE 2.0 Support

Allows the Personal Communications program to be an embedded or linked document within another program.

ASCII host file transfer and VT emulation

Allows your terminal to emulate the functions of a VT52, VT100, and VT220 terminal. Includes XMODEM and YMODEM file transfer support.

Programming Enhancements

DOS EHLLAPI

Allows DOS-based EHLLAPI 16-bit programs to communicate with the Personal Communications emulator.

Emulator Class Library

Provides a language-independent runtime programming interface that allows you to write applications that include Personal Communications as an object in ActiveX/OLE 2.0 compliant programs.

Lotus Scripting

Provides an interface within Personal Communications to allow Lotus scripts to execute, control, and monitor a host session on behalf of an end user.

REXX EHLLAPI Support

Provides support for programmers who are using REXX language application programs to automate functions performed by terminal operators.

VB Scripting

Provides an interface within Personal Communications to allow Visual Basic scripts to execute, control, and monitor a host session on behalf of an end user.

Database Enhancements

DataBase Access

A utility that provides access to data via ODBC drivers. The utility allows you to retrieve and update data from a database such as DB2/400, DB2/MVS, an SQL server, Microsoft Excel, Lotus 1-2-3, or dBASE.

ODBC and DRDA

Open Data Base Connectivity (ODBC) and Distributed Relational Database Architecture (DRDA) provide interfaces that allow applications to access and update data from many sources using Structured Query Language (SQL) as a standard for accessing data. ODBC provides access for AS/400s and DRDA provides access for MVS-based databases.

Connectivity Enhancements

3174 Peer Communication (LAN over COAX)

The Lan over Coax function allows LAN connectivity via 3174 using a DFT (3270) card. This allows the user LAN access via existing coax or twisted pair wiring.

AnyNet SNA over TCP/IP

Can be used to connect SNA sessions (LU0, 1, 2, 3 or 6.2), dependent LU 6.2 sessions, APPC3270 display sessions, or 5250 sessions through a TCP/IP network.

AnyNet Sockets over SNA

Enables TCP/IP application programs using the Winsock 1.1 or 2.0 socket interface to communicate over an SNA network.

APPC/CPI-C Full Duplex

Provides full duplex connectivity options for APPC and CPI-C programs.

What's New

Asynchronous Console (5250)
SNA-over-Async (console) attachment enables Personal Communications to act as an AS/400 system console through a special console cable between a PC COM Port and an asynchronous adapter card installed in the AS/400.

Backup Server/Host Connection (telnet)
Lets you specify up to two backups for telnet connections for 3270, 5250, and VT.

Hayes AutoSync
Hayes AutoSync is a communication mode in which the modem provides synchronous communication to the host while using an asynchronous interface on the workstation.

IBM SDLC PCMCIA adapter/modem (Japan only)
Provides SDLC support using PCMCIA cards.

ISDN via existing COM port
Allows Personal Communications to use Integrated Services Digital Network lines over a standard COM port connection.

NetWare and CS/NT client support
Provides an LUA or APPC interface for connections to a Netware-for-SAA V2.0 or V2.2 server or to a Communications Server for Windows NT.

Network Drives (shared folders)
Enables you to access a folder on the AS/400 host system as if it were a drive on your personal computer.

Additional Twinax Adapters
Provides support for three additional Twinax adapters: IBM 5250 Express ISA Adapter, IBM 5250 Express PC Card, and IBM 5250 Express PCI Adapter.

TN5250 over IPX/SPX Socket
For 5250 emulation support, Personal Communications will provide the client side of connectivity over an IPX/SPX socket using the transport protocol AF_IPX.

Twinax Console
Provides console attachment to S/3X and AS/400 computers using a Twinax adapter.

S/3X (Twinax)
Provides twinax connection for System/36 and System/38 computers.

WAC
Provides support for IBM's Wide Area Connector (WAC) adapter (MCA or ISA). This adapter provides two independent connections, which can be any of V.24 (RS232), X.21, V.35, or RS422 types; it allows SDLC communication of up to 2.048 mbps.

X.25
Provides support for a network running X.25 protocols.

Installation/Configuration Enhancements

ASCII SNA configuration files

SNA node configuration files are now ASCII text files. This makes installation and maintenance of workstations easier because the data can be edited using an ASCII editor.

Unattended installation of IEEE 802.2 driver (LLC2)

Provides for the installation of the LLC2 driver without the need for end-user intervention.

Systems Management Server (SMS) installation

Allows you to have an unattended remote install and uninstall of Personal Communications V4.2 using the Microsoft Systems Management Server (SMS) product. Refer to the "Remote Installation and Uninstallation of Personal Communications" appendix in the *Personal Communications Reference* manual for more information.

Other Enhancements

Command line start and stop of the SNA node

Allows you to start and stop the Personal Communications SNA node using the command line.

Internet/Intranet Hotspots

Allows any URL that is displayed on the host screen (3270, 5250, or VT) to be regarded as a hotspot. Clicking on the hotspot launches your web browser and connects you to the web site specified by the URL.

Programmed Symbol Set graphics

Allows Personal Communications to display host-generated graphics using a Programmed Symbol Set.

New code pages

Provides support for code pages for seven new languages:

Belarussian (code page 1025)
Estonian (code page 1122)
Laos (code page 1132)
Latvian (code page 1112)
Lithuanian (code page 1112)
Ukrainian (code page 1123)
Vietnamese (code page 1130)

SNA data compression

Provides for the compression of data being transferred on an SNA communication link or on an LU 6.2 session.

What's New

Part 2. Planning for and Installing Personal Communications

© Copyright IBM Corp. 1989, 1997

Chapter 2. Planning to Install Personal Communications

Personal Communications supports a wide range of workstations that use different bus architectures and peripheral components. There are hardware and software requirements, as well as memory and storage requirements, to consider when planning the installation of Personal Communications.

The following sections describe and list support for monitors, adapters, and keyboards.

Workstation Hardware

Personal Communications supports workstations with the following hardware:

Table 2. Workstation Hardware Support

System units	The recommended system unit has an Intel** 80486** or faster microprocessor and access to a CD-ROM drive.
Display Monitors	All display monitors supported by Windows 95 or Windows NT.
Video Adapters	All video adapters supported by Windows 95 or Windows NT.
Keyboards	Enhanced keyboard (101-key, 102-key, 104-key) (Only the 101-key for Japanese) Space-saving keyboard Microsoft Natural Keyboard 5576-001/002/003/A01/B01/B05 (Japanese)
Printers	All printers supported by Windows 95 and Windows NT when a PDT file is not used. For more details about printers supported in PDT mode, refer to the *Personal Communications Reference* manual.
Communication adapters	LAN, SDLC, coaxial, twinaxial, WAC, COM Port, OEM, and Multiprotocol communication adapters.
Modems	All asynchronous modems that use the Hayes AT command set and are supported by Windows 95 or Windows NT. Synchronous (SDLC) modems attached to a Multiprotocol adapter (MPA), SDLC or WAC adapter.

Workstation Hard Disk Requirements

This section tells the amount of disk space you will need to install the full *IBM eNetwork Personal Communications for Windows 95 and Windows NT* on your workstation.

If you are running Windows 95, Personal Communications files will need 700 KB of disk space on the disk drive where Windows 95 is installed.

If you are running Windows NT, Personal Communications files will need 3.1 MB of disk space on the disk drive where Windows NT is installed.

In addition, for each item in the following table that is not already installed, you will need the amount of space shown. The space must be on the same disk drive where Windows (95 or NT) is installed:

© Copyright IBM Corp. 1989, 1997

Software Package	Space Required
Visual Basic	1.8 MB
Microsoft ODBC Shared Libraries	1.3 MB
Microsoft Shared Libraries	2.4 MB

If you use the **Run Personal Communications from a server** installation option, Personal Communications requires less than 2 MB of disk space on your workstation.

In addition to the amount of space Personal Communications takes, you need 3 MB of disk space for temporary files or work space during installation.

Workstation Memory Requirements

For Personal Communications the amount of memory you need depends on several factors, including the operating system you are running on, the attachment type, number of sessions, and the use of programming interfaces such as Emulator High-Level Language Application Programming Interface (EHLLAPI) and Dynamic Data Exchange (DDE). Personal Communications for Windows 95 will run on 16-MB workstations; a minimum of 32 MB of memory is recommended for Windows NT.

If you want to run Personal Communications and other applications simultaneously, you might need to add more memory to your workstation.

Workstation Software

For Windows NT, Personal Communications requires that your workstation have Microsoft** Windows NT Version 3.51 or Version 4.0 installed. Personal Communications also runs under the Windows 95 operating system.

For the SNA attachment to a NetWare for SAA 2.0 or 2.2 gateway, you need one of the following programs:

NetWare for SAA 2.0 client (provided with Personal Communications)
NetWare for SAA 2.2 client (obtainable from the NetWare server)

For attachment to the Microsoft SNA Server for Windows NT, you need the Microsoft SNA Server Windows NT Client; for attachment to the Microsoft SNA Server for Windows 95, you need the Microsoft SNA Server Windows 95 Client.

For SNA client attachment to a Communications Server for NT gateway, you need the Communications Server for NT Client, which can be downloaded from the server. An alternate method is to configure Personal Communications as an APPN End Node connected to a CS/NT Network Node.

Host Requirements

Refer to the *Personal Communications Reference* manual for information about software and hardware requirements for host systems.

Chapter 3. Installing Personal Communications

This chapter provides some tips about installing Personal Communications. Online help is also available. Press F1 in any Setup window to see it.

Types of Installation

Personal Communications allows you many installation options:

Install from CD-ROM, diskette, or from a network server.
Use the silent installation approach.
Migrate from a different version (for example, Personal Communications for Windows 3.1).
Upgrade from a previous version.
Choose whether you want to install:
- 3270, 5250, VT, or all of these.
- Communications APIs, which include the APPC and CPI-C programming interfaces, and the protocols that let you use SNA communications such as IEEE 802.2, SDLC, SNA-over-Async, and AnyNet SNA over TCP/IP.
- Help files and publications.
- Various utilities.
- Printer-definition files and tables, which allow more control over printer output.
- Sample programs for many of the application programming interfaces (APIs).
- Character-support for many languages.

Considerations Before Installing

If you plan to install the Communications Server, Communications Server SNA API clients, NetWare clients, or Microsoft SNA clients, install them prior to installing Personal Communications. If you already have Personal Communications installed on your machine, and decide you want to install these products, you must first remove Personal Communications and then install these other products.

If you first install the Communications Server, Communications Server SNA API clients, NetWare clients, or Microsoft SNA clients, and then choose to uninstall any of them, Personal Communications will not work. To get Personal Communications to work again, it must be uninstalled and reinstalled.

By default, installation uses the C drive of your computer. If you have 3 MB or less storage available for temporary files on your C drive, you can redirect the temporary files to another drive by changing the TMP environment variable in the AUTOEXEC file. For Windows NT, you set the tmp environment variable through the Control Panel System Object. For example:

Before: SET TMP = C:\temp
After: SET TMP = D:\temp

Before you begin installation, make sure all other applications are stopped. If any version of Personal Communications is already running, stop it before starting Setup.

© Copyright IBM Corp. 1989, 1997

For Windows NT: to install Personal Communications on your workstation you must be logged onto your workstation as a member of the Administrator group.

For Windows 95: When using an IBM PC350, the install may terminate unexpectedly during file copying. This may be prevented by removing the device=*vpowerd statement from the 386Enh section of the **system.ini** file in your windows directory (add a ';' at the start of the line). This limitation may be removed by a future BIOS update.

National Language Support (NLS) Considerations

Personal Communications 4.2 provides special language font files for some languages (Arabic, Belarussian, Cyrillic languages, Estonian, Greek, Hebrew, Laotian, Latin-2 languages, Latvian, Lithuanian, Thai, Turkish, Ukrainian, and Vietnamese). To install one of these font files, choose **Language Choice** during **Custom Installation**.

Microsoft SNA Client, NetWare for SAA, Communications Server, and Communications Server SNA API Client Installation Considerations

If you are going to use a NetWare for SAA, Communication Server, Communications Server SNA API Client, or Microsoft SNA client, you have to install these before you install Personal Communications.

If you want to run Personal Communications as a client to a server machine and you want to use the Microsoft SNA Client, NetWare for SAA, Communications Server, or Communication Server SNA API client code, then Personal Communications must have been installed for use with each of these respectively on the server.

If a session using the Microsoft SNA LUA Client displays communication check 680 on the OIA line, closing or disconnecting the session will cause a hang.

Starting multiple emulator sessions that use different Microsoft SNA Client attachment types (FMI, LUA, APPC) simultaneously can provoke session hangs. Microsoft has stated this as a limitation of the Microsoft SNA Client.

The Microsoft SNA Server response time monitor (RTM) feature is not supported.

MS SNA Server does not support SNASVCMG session password substitution

At the time Personal Communications 4.2 was released, Microsoft SNA Server for NT did not support password substitution on the SNA System Services (SNASVCMG) mode, even though strict SNA implementations require that all sessions between two LUs have the same conversation-level security indicators. If the data modes support password substitution, then the service modes should support password substitution as well.

At the time of this release, Microsoft was working on a fix for this problem for Microsoft SNA Server for Windows NT V2.0, 2.1, 2.11 and 2.11 service pack 1. Contact Microsoft Product Support Services for more information on the availability of this fix.

Server Installation Considerations

Depending upon whether the Microsoft SNA Client, Communications Server SNA API Clients, NetWare for SAA, or the Communications Server is detected on the workstation installing to a server, the installation routine for Personal Communications will install different required files to a server.

If you are unsure of whether the server has been installed for use by a Personal Communications workstation running an SNA Client, you can check the Personal Communications directory on the server workstation for the presence of the following files:

PCSCTSS.DLL indicates the Microsoft SNA client

PCSCTNW.DLL indicates one of the following:

- a NetWare for SAA client
- a Communications Server
- a Communications Server SNA API client

Considerations for Coexistence with NetWare

For Windows NT, a LAN via NetWare for SAA connection requires the Microsoft IPX protocol and Windows Socket Version 1.11 (or later) support. For NetWare for SAA API client support, install the Novell Netware client for Windows NT and then install the NetWare for SAA client for Windows NT.

For Windows 95, install the Novell Netware client for Windows 95 and the NetWare for SAA client for Windows 95.

Using a Workstation with Multiple Operating Systems

There are some special considerations if you want to use machines that share hard disk space among multiple operating systems. If you want to put Personal Communications into a Personal Communications subdirectory that was originally installed under another operating system, you must remove the previous version first. Failure to do this may cause unpredictable results, including not being able to run Personal Communications from either operating system.

Choosing Your Installation Options

The following chart will help you find sections in this chapter that refer to the type of installation that you want to do. For detailed information on the CD-ROM interface, which helps guide you through the installation process, refer to the *Personal Communications Guide to Installation.*

If you want to install Personal Communications...	Go to...
To create diskettes	Page 35
To install the IBM Library Reader	Page 26
On a workstation (stand alone)	Page 27
On a workstation as a client to a server	Page 28
On a server for use by Personal Communications clients	Page 29
On a server for use in installing Personal Communication on workstations	Page 30

Note

If you have a different version of Personal Communications already installed, see “Migrating from Personal Communications for Windows 3.x” on page 30 for more information.

If you are reinstalling Personal Communications or are upgrading Personal Communications, make sure that Personal Communications is not running before you start setup.

Note

The IBM BookManager Library Reader (ILR) should be installed BEFORE installing Personal Communications if you intend to install and use the online publications included in this package. Failure to do this will make the selections in the Product Information selection of the **Start - Programs - IBM** Personal Communications menu unusable. The publications are still viewable if you install ILR after Personal Communications by opening the publication file (*.boo) from within the ILR application. On NT4.0, the publications are viewable by using Explorer and double clicking on the filename.

Starting to Install Personal Communications from Your CD-ROM

To start installing Personal Communications from the CD-ROM, do as follows:

1. Insert the *Personal Communications CD-ROM* into the CD-ROM drive.
2. If **autorun** is not enabled on your workstation, then execute the **setup** program in the root directory of the CD-ROM.
3. Click on the **Installation** icon. On the next screen, select all of the products you would like to install:
4. Click on the **Begin** button to begin the installation.
5. Click on the **Standard** installation if you would like to begin installing Personal Communications. Another option is to copy the Personal Communications files to a server so that, at a later time, you can install Personal Communications from a server. A third option is to pass parameters to the installation program. See the online help if you need more information.

The Personal Communications welcome window appears.

You can also use the Personal Communications CD ROM to go directly to the Personal Communications home page where you can obtain Personal Communications updates, news, free downloads, and enhancements.

Workstation Installation

If you want to install Personal Communications onto your workstation, you can choose to:

Install Personal Communications so that the workstation does not need to utilize the server (stand alone).

Install Personal Communications so that it runs as a client.

Workstation Installation (Stand Alone)

To install Personal Communication so that it can be run from your workstation, do as follows after the Personal Communications welcome window appears:

1. If you have a different version of Personal Communications on your workstation, refer to “Migrating from Personal Communications for Windows 3.x” on page 30 for more information about upgrading and migration.
2. Select **Run Personal Communications from my workstation** and then click **Next**.
3. Select one or more components you would like to install and then click **Next**.

   If you want to install one of the emulation components and you plan to use an SNA connection, make sure to also select **Communications APIs**.
4. Type the drive and directory where you want to install Personal Communications, or accept the default drive and directory, which is:

   C:\PROGRAM FILES\PERSONAL COMMUNICATIONS

   The default directory for Windows NT 3.51 is:

   C:\PERSONAL COMMUNICATIONS
5. Next, you need to select a **Full, Custom,** or **Minimal** installation option and then click **Next**. For NLS language installation, choose a **Custom** installation. Refer to the “National Language Support (NLS) Considerations” on page 24 for more information.
6. If you select **Custom Installation**, the Select Components window appears. The amount of disk space required for each option and the amount available on the destination disk are displayed. Check the components you want to install from the list and then click **OK**.

   The component is not selected unless a check mark appears next to the component name. To select a component, click the Check column next to the component name or click on the component name and then press the spacebar.
7. Accept “Program Files\Personal Communications” as the name of the destination directory or, to select another directory, click **Browse** and then select a different directory from the Directories list and click on **OK**. After you make your choice, click **Next** if you are ready to install Personal Communications. If you want to change any installation options, click **Continue with installation** to uncheck the check box and then click **Next**. A progress bar will show the progress of the installation.
8. If you have installed the communications APIs, you will be asked whether you want to install the IEEE 802.2 interface provided with Personal Communications. (The IEEE 802.2 interface is also known as the LLC2

protocol.) If you choose **Yes** (the default), the IEEE 802.2 LLC2 protocol driver will install automatically. If you deselect the **Yes** box, it will not be installed.

The same window asks whether you want automatic restart of your machine. **Yes** (the default) will result in automatic rebooting after installation is complete. Restarting is a necessary part of this installation procedure, but if you are installing several products, you may prefer to postpone restarting until all your installation activities are complete. Simply deselect the **Yes** box, but remember to reboot later, because you will not have another reminder.

9. If you did not choose to install the communications APIs, you will see a window that asks you to choose **Yes** for automatic restarting or **No** to postpone restarting. You may prefer to postpone restarting if you are installing several products, but you must remember to reboot later.

This completes the installation of Personal Communications.

Setting Up a Workstation to Run As a Client

When you run Personal Communications as a client from a server, your workstation profiles and other private files are stored on your workstation (or in your private directory on the server) in a subdirectory named PRIVATE. When you start Personal Communications, the program files are loaded from the server, and your private files are used to define your host sessions.

Personal Communications needs 3 MB of space on the boot drive to store files.

To set up a client workstation, do as follows after the Personal Communications welcome window appears:

1. Select **Run Personal Communications from a server** and then click **Next**.
2. In the **Server** field, type the network drive and directory where Personal Communications is installed.

   Note

   Make sure the network drive location is always the same drive when you use your workstation. You can use the Windows Explorer for Windows NT 4.0 or Windows 95, or File Manager with Windows NT 3.51 to map a network drive that always accesses the same network drive when you start your workstation.

3. In the PRIVATE field, type the drive and directory where you want Personal Communications to store your private files and other configuration information; then click **Next**.

   Your personal files will be stored in the PRIVATE subdirectory of the directory that you specify.

4. Accept “IBM Personal Communications” as the name of the program folder or group, type another folder or group name, or select another folder or group from the list and then click **Next**.
5. Accept “Program Files\Personal Communications” as the name of the destination directory or, to select another directory, click **Browse** and then

select a different directory from the Directories list and click on **OK**. After you make your choice, click **Next** if you are ready to install Personal Communications. If you want to change any installation options, click **Continue with installation** to uncheck the check box and then click **Next**. A progress bar will show the progress of the installation.

6. If you have installed the communications APIs, you will be asked whether you want to install the IEEE 802.2 interface provided with Personal Communications. (The IEEE 802.2 interface is also known as the LLC2 protocol.) If you choose **Yes** (the default), IEEE 802.2 will install automatically. If you deselect the **Yes** box, it will not be installed.

   The same window asks whether you want automatic restart of your machine. **Yes** (the default) will result in automatic rebooting after installation is complete. Restarting is a necessary part of this installation procedure, but if you are installing several products, you may prefer to postpone restarting until all your installation activities are complete. Simply deselect the **Yes** box, but remember to reboot later, because you will not have another reminder.

7. If you did not choose to install the communications APIs, you will see a window that asks you to choose **Yes** for automatic restarting or **No** to postpone restarting. You may prefer to postpone restarting if you are installing several products, but you must remember to reboot later.

Network Installation

If you install Personal Communications on a network server, workstations connected to it can share the program files; there is no need to install the program files on the client workstations. The server can be running an operating system such as OS/2, Windows NT, Windows 95, or Netware.

When you run Personal Communications as a client from a server, your workstation profiles and other private files are stored on your workstation (or in your private directory on the server) in a subdirectory named PRIVATE. When you start Personal Communications, the program files are loaded from the server, and your private files are used to define your host sessions.

Installing Personal Communications on a Network Server for Use by Clients

You can install Personal Communications on your network server so that client workstations can share the server's program files. Do the following steps after the Personal Communications welcome window appears:

1. Click **Install Personal Communications on a server** and then click **Next**.
2. Type the network drive and directory where you want to install Personal Communications and then click **Next**. If it is an OS/2 server, remember to use only eight characters for directory names. The network drive must be remote and not local.
3. Accept “Program Files\Personal Communications” as the name of the destination directory or, to select another name, click **Browse** and then select a different directory from the Directories list and click on **OK**. After you make your choice, click **Next** if you are ready to install Personal Communications. If you want to change any installation options, click **Continue with installation** to uncheck the check box and then click **Next**. A progress bar will show the progress of the installation.

This completes the installation of Personal Communications on the network server.

Installing Diskette Images onto a Network Server for Remote Installation

You can copy Personal Communications diskette images to a network server so that any workstations attached to the network can install the product from the server.

Copying Diskette Images to a Network Server

The following XCOPY command will copy the Personal Communications diskette images to a network server:

```
XCOPY x:\WIN32\INSTALL\All\*.* <destination>/S
```

where *x* is the CD-ROM drive that you are using.

Diskette images can be used to create diskettes for installing Personal Communications or IBM Library Reader on other workstations.

Migrating from Personal Communications for Windows 3.x

If you have been using a different version of Personal Communications, you can migrate your session profiles, batch files, and other configuration information so you can use them with the new version. An icon is created in the new folder for each migrated session and batch file. Toolbar customizations are not preserved as part of this migration.

If you have a User Profile created by a previous version of Personal Communications, Auto Logon may not work. In this case, please create your User Profile again by selecting **Configure User Profile** in the Customize Communication - 5250 Host Window.

Note

Use of both Personal Communications for Windows (3.X) and Personal Communications for Windows NT or Windows 95 on the same workstation can lead to unexpected behavior and is not recommended.

Modem definition files are not migrated

The migration utility provided with Personal Communications for NT will not migrate modem definition information stored in the .ADU files. Customers must reconfigure the modem after migration of sessions which use the modem.

Migration Considerations

Personal Communications provides a comprehensive set of SNA communications capabilities, collectively called the communications APIs. These APIs allow your workstation to participate fully in a modern communications network that incorporates APPN, which provides many advantages to both users and administrators.

Before you can participate in such a network, your workstation must be uniquely identified; in Personal Communications, you do this by providing the **PC Location Name**, which consists of the name of the SNA network (**NetID**) and the name of your workstation (**CP name**). If you don't know which names to use, obtain them from your network administrator. If you can't locate a network administrator, try using APPN as the **NetID** and NPxxxxxI as the CP name where xxxxx is the PU ID for the workstation. If you use an attachment type other than the following ones, type any 8 characters in both the **NetID** and the **CP name** fields; Personal Communications will not validate or use this information.

The attachment types that require this identification are:

LAN via IEEE 802.2
APPC3270
3270 via AS/400 (3270 Passthru) for LAN, and SDLC
Synchronous Data Link Control
SNA-over-Async
Twinaxial Data Link Control (APPC)
Hayes AutoSync
Dependent LU Requester (DLUR)
AnyNet
Advantis (IIN)
X.25
OEM adapter

Refer to the *Personal Communications Reference* manual and to the online help for more information about migrating specific information from other versions of Personal Communications.

Note

If you are migrating an existing workstation profile, you will be asked to supply a PC location name during the migration process. If you do not already have a PC location name, then you must either obtain one from your network administrator or else try using APPN as the Net ID and NRxxxxxI as the CP name where xxxxx is the PU ID for the workstation.

If you use only the TN3270, TN 5250, HPO, Home3270, and Coax attachments, then the value for the PC location name is not important, and any one to eight character value can be entered for both the Net ID and for the CP name.

Manually Running the CFGWIZ Migration Tool

The CFGWIZ migration tool runs automatically as part of the installation procedure for Personal Communications; however, if you want to manually use the CFGWIZ migration tool to migrate your configuration files to Personal Communications 4.2, do the following:

Copy the files you want to migrate to your Private directory on Personal Communications V4.2.

C:\Program Files\Personal Communications\Private

Change to the Personal Communications directory by typing the following:

CD C:\Program Files\Personal Communications

At the command line, type the following to run the tool:

CFGWIZ.EXE MIG C:\Program Files\Personal Communications\Private

The above steps will have migrated your configuration files to the Personal Communications 4.2 format.

Removing a Previous Version of Personal Communications for the Windows 3.x Environment

If a version of Personal Communications for Windows is detected on your workstation during setup, you will be prompted to choose whether you want to remove or keep the other version.

AnyNet for Windows V3.x will not run on the Windows NT or Windows 95 operating system. If you have this software installed, Personal Communications will inform you and ask you if you want instructions on how to uninstall it.

If you choose to remove the Windows version of Personal Communications, Setup will delete the existing files and then install Personal Communications. Your existing workstation profile and other user files in the PRIVATE subdirectory are not deleted. They are migrated for you during installation.

WIN.INI and SYSTEM.INI

On Windows 95 only, Personal Communications will remove various entries in the WIN.INI and SYSTEM.INI files, including references to the Personal Communications directory.

CONFIG.SYS

On Windows 95 only, you must manually remove some entries in your CONFIG.SYS file. For example, if you were using the IBM LAN Support Program (LSP), you must delete or remark its device statements. Some examples of those statements are:

```
DEVICE=\LSP\DXMA0MOD.SYS  001
DEVICE=\LSP\DXMC0MOD.SYS N ,d800,0,0,0
DEVICE=\LSP\DXMT0MOD.SYS es=5 est=20 s=16 st=16
```

MSDLC Protocol

If you have been using the 16-bit version of MSDLC to provide IEEE 802.2 LAN support, you must remove it from your Windows NT or Windows 95 network configuration. The 16-bit version of MSDLC cannot be used concurrently with the IBM IEEE 802.2 LAN support.

Keeping a Windows V3.x Version of Personal Communications

If you choose to keep a Windows V3.x version of Personal Communications, Setup will install Personal Communications so the two versions can coexist. During installation, Setup automatically migrates copies of your existing workstation profile and other user files to the PRIVATE subdirectory in the Personal Communications directory.

Note

If you're keeping other versions of Personal Communications, you must keep them in a different directory from the directory (or drive) where you plan to install Personal Communications.

Removing Personal Communications

You can remove the Personal Communications program files, folder items, subdirectories, and registry entries. However, the configuration and other user files in your PRIVATE subdirectory, as well as any corresponding entries in the Startup folder, are not removed.

Removing Personal Communications from a Workstation

To remove Personal Communications from your Windows NT workstation, you must be logged on as a member of the Administrator group.

1. Make sure that Personal Communications is not running before you begin your uninstallation.
2. For Windows NT 3.51, double-click the Uninstall icon in the Personal Communications group to complete the process.

   For Windows NT 4.0 and Windows 95, from the Start menu, select:

   Settings
   Control Panel

3. From the Control Panel window, double-click **Add/Remove Programs**.
4. Select **IBM Personal Communications** and then click **Add/Remove**.
5. Click **Yes** to confirm that you want to delete Personal Communications.
6. Click **OK** until you return to the Control Panel window.

Note

If you plan to reinstall Personal Communications, restart your workstation first.

Removing Personal Communications for Windows NT or Windows 95 from a Network Server

To remove Personal Communications from a network server:

1. Make sure no client workstations are using Personal Communications from the server.
2. Shut down and then restart the server to make sure that none of the Personal Communications files are in use.
3. For Windows NT 4.0 or Windows 95, select **Run** from the Start menu.

   For Windows NT 3.51 select **File** from the Program Manager program group and then select **Run**.
4. In the Run window, type *path*\UNINST, where *path* refers to the path to Personal Communications files on the server, and then click **OK**.

Removing the IBM BookManager Library Reader

IBM BookManager Library Reader (ILR) should be removed by using the Installation Utility. (From the menu bar, select **Action** and then **Delete**). After running the delete utility, reboot and then run EPFIDEFI.BAT to finish the removal. You may have to manually delete the ILR program directory (usually, C:\READIBMW) which should be empty after the batch file runs.

If you have trouble deleting the IBM BookManager Library Reader for Windows product, you can manually delete it by:

1. Deleting all of the files that you have installed into the IBM Library Reader program directory (usually, C:\READIBMW*.*)
2. Erasing the MFC250.DLL file in the WINNT* subdirectory (usually, C:\WINNT*\mfc250.dll)
3. Erasing the product initialization file (usually C:\WINNT*\readibmw.ini)
4. Removing IBM Library Reader from the path statement in AUTOEXEC.BAT (usually C:\READIBMW).
5. Removing IBM Library Reader icons as described below:

   From NT3.51 Program Manager:

   a. Highlight the Library Reader for Windows folder icon.

   b. From the menu bar select **File** and then **Delete**.

   c. Respond **Yes** to the prompt to delete the entire folder and its contents.

   From the NT4.0 Start Menu:

   a. Right mouse click on the Start button.

b. Select **Explore All Users**.

c. Double-click on the Programs icon in Contents of "Start Menu."

d. Select **Delete** and respond **Yes** to the prompt.

e. Close the Explorer.

Creating Personal Communications Installation Diskettes from Your CD-ROM

To create diskettes, do as follows:

1. Insert the *Personal Communications CD-ROM* into the CD-ROM drive.
2. Click on the **Create Diskette** icon.
3. Select the Personal Communications product.
4. Click on **Begin**.

These diskettes can now be used to install your product on machines that do not have access to a CD-ROM or to a network server.

Installing Personal Communications from Diskette

Once you have created diskettes, do as follows to install Personal Communications:

1. For Windows NT 4.0 or Windows 95, insert the first installation diskette in the diskette drive and then select **Run...** from the Start menu.

   For Windows NT 3.51, insert the first installation diskette in the diskette drive and then select **Run** from the File menu in the Program Manager group.
2. For Personal Communications, type A:\SETUP in the Run command line (where A is the name of your diskette drive) and then click **OK**.
3. Follow the instructions in the Installation Instructions window.

Installing Personal Communications Using the Silent Installation Option

Personal Communications (utilizing the InstallShield Silent** program) provides a method of installation that can allow for the automated electronic distribution of software. This type of installation (called silent installation) does not require a user to provide installation input via dialog boxes, but utilizes a response file to provide required input.

Personal Communications provides sample response files for the PC400 product package and for the combination PC400, PC/3270, and VT package. These files can be found on the Personal Communications CD-ROM and they pertain to the following packages:

IBM eNetwork Personal Communications AS/400

setup.iss Applies to a full installation for the 5250 emulation PC400 package

min5.iss Applies to a minimal 5250 emulation PC400 package without books and samples

IBM eNetwork Personal Communications

setup.iss Applies to the full installation for the PC400, PC/3270, and VT package

min35.iss Applies to a minimal installation for the PC400, PC/3270, and VT package without books and samples

Note

The sample response files may be used only to install the English versions of Personal Communications.

The sample response files can be used during your installation if your workstation configuration matches the definitions in the sample. The samples are particularly useful to a first-time user of Personal Communications. If you already have Personal Communications, AnyNet, Microsoft SNA Server, Communications Server for Windows NT, or NetWare for SAA previously installed, the samples will not work as shipped. You need to create a unique response file to match your workstation. The samples may be minimally edited.

To use the sample response files, the InstallShield Setup program can be started either by entering a command in the Options entry field on the dialog box that appears after clicking on the **Begin** tab of the initial installation panel on the Personal Communications CD-ROM or a command can be entered on the DOS command line. A default SETUP.LOG is created and stored in the same directory as the SETUP.EXE file, if you have not already named a separate log file. You must have write access to this directory.

Refer to the appendix on 'Using InstallShield Silent' in the *Personal Communications Reference* manual for information on usage examples.

Recording and Using Your Own Response File

Another option available with a silent installation is to record your own response file during an installation of Personal Communications; you can then use the recorded response file during all other future identical installations of Personal Communications.

Checking the Logs

When you are running a silent installation, no messages appear, but a log file named **SETUP.LOG** captures the relevant installation process information. Check the log to see that the silent installation completed successfully. Failure is indicated by a ResultCode value that is less than zero.

An option is available to allow you to set up your own log file, if desired.

Chapter 4. Configuring Sessions

Personal Communications saves emulator configuration information to a workstation profile (*.WS) and SNA information to a configuration file (*.ACG). Depending on your Personal Communications configuration, you might have a workstation profile only or both a workstation profile and a configuration file. The workstation profile can be used later by other Personal Communications sessions, or to restart this session. The SNA configuration file (*.ACG) is used to initialize the SNA node of Personal Communications.

You can have an icon created for each workstation profile. Then you can select the session icon to establish communication with the host system using the saved workstation profile.

Note

If you configure more than one workstation profile, we strongly recommend that you use the same SNA configuration file for all of them. If you do not use a common SNA configuration file, make sure that there are no conflicts of link names or PU names (for 3270 sessions) between the two configuration files. In addition, the local system information should be the same on the Configure Local System windows. Failure to do this might result in unpredictable or inconsistent behavior.

Configuring PC400

To connect PC400 to an AS/400 system, specific configuration information in the workstation profile must correspond to the information specified at the AS/400 system. Refer to Appendix D, “AS/400 Configuration Examples” on page 119 for more information about creating display, line, and controller descriptions on the AS/400 system.

If you want to configure multiple links, refer to Appendix F, “Configuring Multiple Links” on page 151.

Creating a Configuration

To configure a session:

1. For Windows NT 4.0 or Windows 95, from the Start menu, select:

   Programs
   IBM Personal Communications
   Start or Configure Session

© Copyright IBM Corp. 1989, 1997

For Windows NT 3.51, double-click the Program Manager program group, double-click the Personal Communications program group, and then double-click on the **Start Configure Session** icon.

2. The logo panel appears. A message tells you that you must configure a connection.
3. Click **OK** to continue. The Customize Communication window appears.

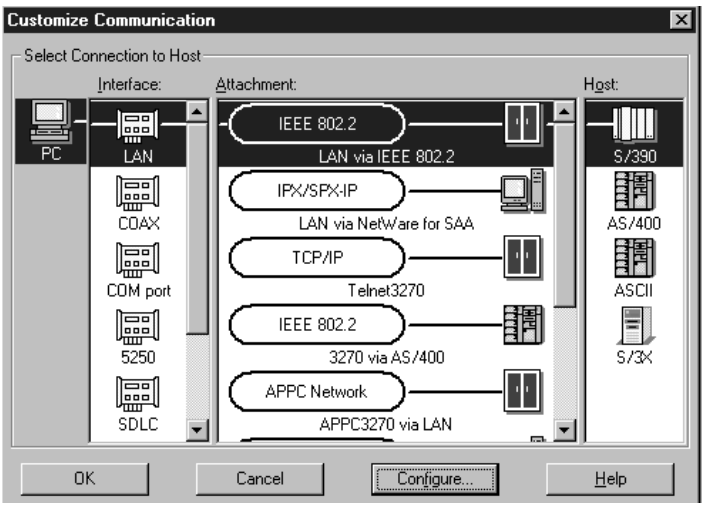

4. If more than one type of host is shown, click on:

   S/390 for connections to an S/390 system
   AS/400 for connections to an AS/400 system
   ASCII for connections to an ASCII system
   S/3x for connection to System 36 and System 38 computers.

5. Click on the interface that you will use; the attachments that can be used with this interface appear.
6. Click on the attachment type you want to use.
7. Click **Configure**.

   The Customize Communication – 3270, 5250, ASCII, or S/3x– Host window appears (depending on the host you selected in step 4).

8. Configure the session parameters, then click **Configure Link**.

   Make your selections for the parameters in this window. Click **Help** or press F1 to display parameter details.

   Save the workstation profile, as described in 39.

Note

If you have a user profile that was created by a previous version of Personal Communications, Auto-Logon (when connecting to an AS/400 host) may not work. In this case you must create the profile over again. Select **Configure User Profile** in the **Customize Communication – 5250 Host** window.

Saving Configuration Information

This section describes how to save configuration information. SNA configuration information is stored in an *.ACG file, and emulator configuration information is stored in a workstation profile (*.WS).

Saving an SNA Configuration

The Save As window appears automatically after you create or change a configuration with an SNA attachment. To save this information in a configuration file:

1. Type the file name and then click **Save**. The default file type is *.ACG and the default directory is the PRIVATE subdirectory in your Personal Communications directory.

   When you save an SNA configuration file, you are also making it the default configuration for the SNA node.

   You are returned to the Customize Communication window.

2. Click **OK** until you return to the session window, and then save your workstation profile, as described in the next section, Saving a Workstation Profile.

Saving a Workstation Profile

If you save your emulator configuration information, the session will have the same characteristics the next time you start it. If you have an icon added to the Personal Communications folder, you can restart the session with the saved configuration information by clicking on this icon from the Start menu for Windows NT 4.0 or Windows 95 or double-click this icon in the Personal Communications program group for Windows NT V3.51. You are automatically given the opportunity to save your session information when you close a session. However, if you want to save the information at any time, do as follows:

1. Click **Save** from the File menu in the session window.

   The Save WorkStation Profile as window appears.

2. Type a file name (*.WS) and then click **OK**. The name you enter will become the icon's title unless you enter a description.

   Tip

   If you want a longer or more descriptive title, enter the text you want in the **Description** field.

   Note that you can choose the directory where this file is saved, but the default location is the PRIVATE subdirectory.

3. A message appears that lets you choose to have an icon created.

4. If you select **Yes**, an icon is created in the folder or program group you specify and you can start the workstation profile by selecting this icon.

If you select **No**, you can start the session by clicking **Run** from the Start menu for Windows NT 4.0 or Windows 95, or the File Manager (Windows NT V3.51), and entering:

C:\PROGRAM FILES\PERSON~1\PCSWS.EXE C:\PERSON~1\PRIVATE*xxx*.WS

where *xxx*.WS is the workstation profile name.

Note that you must specify all paths and directories. You can type the name of the directory as either PERSON~1 or PERSONAL COMMUNICATIONS.

Changing Configuration Information

You can change all of the configuration parameters in the workstation profile and the SNA configuration .

Changing an SNA Configuration

You can change the basic configuration parameters of an SNA configuration for your session in either of two ways: you can use the SNA Node Configuration program, or you can edit the configuration file with an ASCII editor. We recommend that you use the SNA Node Configuration program whenever possible. If you manually edit the configuration files, we strongly suggest that you use the SNA Node Configuration Verification utility prior to making use of the file for the first time.

Using the Configuration Program

To change advanced configuration options or to specify a different default configuration, you need to use the SNA Node Configuration program. For more information about SNA node operations, see “SNA Node Operations” in the *Personal Communications Reference* manual.

To change an SNA configuration:

1. Click **Configure** from the Communication menu and then click **Configure** again on the next window.
2. Change the parameters on this window, as necessary. If you want to make additional changes, click **Configure Link**.

   Your default configuration file should be opened automatically. If you want to change a different configuration, click **Existing** and choose the configuration file you want to change.
3. Make your changes and then click **Next**.

   An error message will appear if you make changes to the following parameters:

   Link Station Name
   NetID of the System Location Name

   If this occurs, click **Back** and then click **New**.
4. Now you can proceed through the windows and make additional changes, if necessary.
5. Click **Finish** when you are done.
6. If you want to replace the existing configuration, click **Yes** to overwrite it. If you want to create a new configuration that is based on the existing one, type a

new file name; however, you must use SNA Node Configuration to make a new configuration the default configuration.

7. Click **OK** until you return to the session window.

Using an ASCII Editor to Change Your Configuration Files

For Personal Communications 4.2, all data that is entered into the SNA node configuration files (extension .ACG) is stored and maintained in ASCII format rather than in binary format. This allows you to create and modify a configuration file without going through the SNA Node configuration interface. You can use the ASCII editor of your choice. A verification tool is available to ensure that you have not made errors when editing your file.

Refer to the *Personal Communications System Management Programming* manual for information on how to edit your configuration data using an ASCII editor and how to verify your editing changes.

Changing a Workstation Profile

To change a workstation profile:

1. If your session window is not active, select the icon corresponding to the workstation profile to be changed.

   The session window appears.

2. Click **Configure** from the Communication menu.

   The subsequent steps are the same as for creating a new configuration, beginning with step 4 on page 38.

3. After you have made your changes, the following message appears:

   > Because you have changed the configuration,
   > communication will be terminated if you
   > proceed. Are you sure?

   If you click **OK**, communication ends, but then you are reconnected using the new configuration information.

   To save the changes in your workstation profile, click **Save** from the File menu in the session window and then click **Yes** to replace the existing file. Otherwise, click **No** to save this information in a new configuration file.

Tip

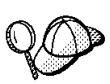

Unless you have unchecked **Save on Exit** from the File menu, changes are saved in the workstation profile automatically whenever you exit a session.

Part 3. Using Personal Communications

© Copyright IBM Corp. 1989, 1997

Chapter 5. Starting and Stopping Emulator Sessions

This chapter describes how to start and stop single and multiple emulator sessions.

If your emulator configuration information was saved, as described in “Saving Configuration Information” on page 39, it is stored in a workstation profile (*.WS). If you have a session icon, you can select it to start a session, using the saved configuration information.

Note

If you are a first-time user of Personal Communications, or there are no session icons in your Personal Communications folder or program group, refer to Chapter 4 to create a configuration.

Starting Sessions

You can use the following methods to start sessions:

For Windows NT 4.0 and Windows 95, select an already-configured session icon from the Explorer or from the Start menu.

For Windows NT 3.51, double-click an already-configured session icon from the Personal Communications program group.

Start from an existing session window.

Specify a workstation profile name in the Run window. For example:

```
C:\PROGRAM FILES\PERSON~1\PCSWS.EXE C:\PROGRAM FILES\PERSON~1\PRIVATE\MY.WS
```

Start multiple sessions with a batch file.

When you start multiple sessions, the titles of session windows are Session A, Session B, and so on, unless you’ve customized them using a batch file.

Starting by Selecting the Session Icon

To start a session using Windows NT 4.0 and Windows 95, click the relevant **Session** icon from the Personal Communications folder on the Start menu.

For Windows NT 3.51, double-click the icon for the session in the Personal Communications program group. (This icon has the same name as the workstation profile if you did not specify a description for it.)

The session starts.

© Copyright IBM Corp. 1989, 1997

Starting from a Session Window

Use the following methods to start from an existing session window:

Start another session using the same workstation profile.
Start another session using another workstation profile.
Start a different type of session using the same session window.

Starting Another Session Using the Same Profile

Select **Run the Same** from the File menu. Another session starts, using the same profile.

Starting Another Session Using a Different Profile

1. Select **Run Other** from the File menu.

   The Open Other Workstation Profile window appears.

2. Double-click the desired workstation profile in the **File Name** list.

3. Select **OK**.

   Another session starts, using the profile specified in step 2.

Starting a Different Type of Session from a Session Window

1. Select **Open** from the File menu.

2. Specify the desired workstation profile and then select **OK**.

   The current session ends and then another session starts, using the selected profile.

Starting a Workstation Profile from the Run Command Line

To start the session:

1. For Windows NT 4.0 and Windows 95, select **Start** and then **Run**.

   For Windows NT 3.51 select **File** and then **Run** from the program group.

2. Type the following command in the **Command Line** field and then select **OK**.

   C:\PROGRAM FILES\PERSON~1\PCSWS.EXE C:\PROGRAM FILES\PERSON~1\PRIVATE*MY.WS*

   where *MY.WS* is the workstation profile stored in the

   C:\PROGRAM FILES\PERSON~1\PRIVATE

   directory.

The session starts, using the specified workstation profile.

Starting Multiple Sessions

If you installed the Multiple Sessions utility, you can use the batch program, which runs batch files (*.BCH), to start two or more workstation profiles at the same time. Personal Communications batch files can also start other programs when you include their startup commands. This is especially useful if you always want to start an application when you start a session. For example, you might want to start an application, such as ZipPrint, that uses a Personal Communications API.

If you created an icon for your batch file, you can start workstation profiles and other programs in the batch file just by selecting the icon.

Creating a Batch File

To configure a session:

1. For Windows NT 4.0 and Windows 95, from the Start menu, select the **Multiple Sessions** icon in the Personal Communications folder.

   For Windows NT 3.51, double-click the **Multiple Sessions** icon in the Personal Communications program group.

   The Create/Modify Batch File window appears.

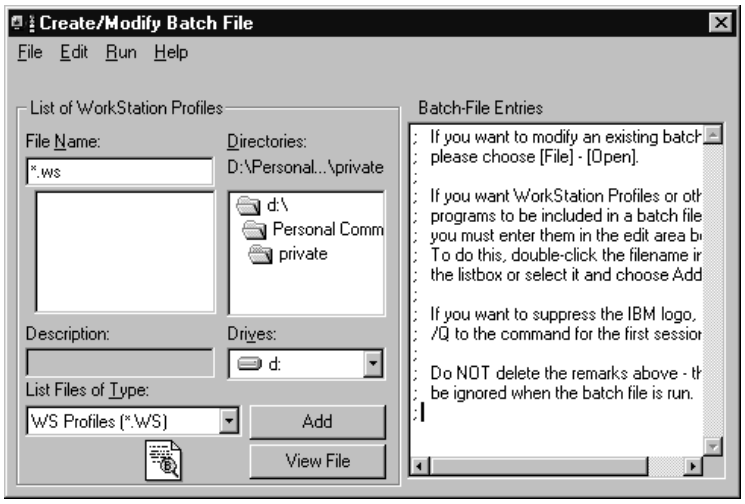

2. There are four methods for including profiles or programs in a batch file. Use the method you prefer:

   Double-click the file names in the **File Name** list box.

   For Windows NT 4.0 and Windows 95, drag and drop the file names (using the right mouse button) from the **File Name** box to **Batch-File Entries**

   Select a file name from the **File Name** list box and then select **Add**.

   Type the complete path and command file name in the batch files entries area.

   Personal Communications places the full path and command that is needed to run the workstation profile or other program above the cursor line in the edit area. If there is no cursor, the command will be added to the last line.

   To see the contents of the profile you added to the batch file, click it in the **File Name** list box and then click **View File** or the magnifying glass.

Note

Some brief instructions appear at the top of **Batch-File Entries**; you need not remove them, because they do not affect the running of the batch file.

There is one exception—if you are using the Japanese version of Windows NT, you must delete these instructions. One way to do this is to select **New** from the **File** menu of the **Create/Modify Batch File** dialog before adding any files.

3. Repeat step 2 for each subsequent file to be added.

PCSWS.EXE Options

To suppress the IBM logo when you start one or more sessions, add the parameter **/Q** to the first command in the batch file:

C:*dir*\PCSWS.EXE C:*dir*\PRIVATE\TCPIP1.WS **/Q**

where *dir* is the directory where you have Personal Communications installed.

To start a session as an icon, not as a window, add the parameter **/I** to the command in the batch file:

C:*dir*\PCSWS.EXE C:*dir*\PRIVATE\TWINAX.WS **/I**

where *dir* is the directory where you have Personal Communications installed.

To start a session with a specific short session ID, insert the parameter **/S=***m* after PCSWS.EXE in the batch file:

C:*dir*\PCSWS.EXE **/S=***m* C:*dir*\PRIVATE*LAN1*.WS

where *m* is the short session ID and *dir* is the directory where you have Personal Communications installed.

Note: If you use the /S option to assign A as the short session ID, you should use this option for all of the sessions in the batch file. Otherwise, if another session starts first, it becomes the A Session and the session with the /S=a option will not start because of the conflicting short session IDs. Another way to prevent conflicts is to assign a character later in the alphabet for the short session ID.

4. When you complete the edit, save the created batch file by selecting **Save** from the File menu.

   The Save Batch File As window appears.

5. Enter a name for the batch file (***.BCH**).

   The name you enter is used as the icon title, unless you enter a description as well.

6. Select **OK** to continue.

7. Select **Yes** if you want to create an icon for the batch file.

   The Personal Communications window appears.

8. Specify the program folder to which the batch file icon is to be added and then select **OK**.

   A message appears, asking you to save the batch file.

9. Select **OK**.

The batch file icon appears in the specified program group.

The following example is a batch file that runs six workstation profiles, saved in the C:\PROGRAM FILES\PERSON~1\PRIVATE directory, and then runs **MYAPP.EXE**.

Sample Batch File

```
C:\dir\PCSWS.EXE C:\dir_\PRIVATE\COAX1.WS /Q
C:\dir\PCSWS.EXE C:\dir\PRIVATE\COAX2.WS /I
C:\dir\PCSWS.EXE C:\dir\PRIVATE\SLAN1.WS
C:\dir\PCSWS.EXE C:\dir\PRIVATE\SLAN2.WS
C:\dir\PCSWS.EXE C:\dir\PRIVATE\AS4Y1.WS
C:\dir\PCSWS.EXE C:\dir\PRIVATE\VT220.WS
C:\APPL\MYAPP.EXE
```

where *dir* is the directory where you have Personal Communications installed.

Using a Batch File

You can use one of the following methods to run a batch file:

For Windows NT 4.0 and Windows 95, select the batch file icon from the Explorer or from the Start menu.

For Windows NT 3.51, double-click on a batch file icon in the Personal Communications program group.

Run the batch file from the Run command line:

```
[drive]:\[path]\PCSBAT.EXE  [drive]:\[path]\xxxx.BCH  /R
```

Note: To run a batch file, specify the /**R** option.

Start the **Multiple Sessions** icon.

1. Select **Open** from the File menu in the Create/Modify Batch File window.
2. Select the desired batch file and then select **OK**.

   The contents of the batch file appears in the edit area.
3. Select **Run** from the Run menu.

Editing an Existing Batch File

To edit an existing batch file:

1. For Windows NT 4.0 and Windows 95, select the **Multiple Sessions** icon from the Start menu.

   For Windows NT 3.51, double-click on the **Multiple Sessions** icon in the Personal Communications program group.

   The Create/Modify Batch File window appears.
2. Select **Open** from the File menu.

   The Open Batch File window appears.
3. Select the batch file you want to edit and then select **OK**.

   The contents of the batch file you selected appear in the edit area of the Create/Modify Batch File window.
4. Edit the batch file. Refer to step 2 on page 47 for more details.

   Refer to the online help for details about the menu bar Edit functions. Select **Index** from the Help menu and then click **Menu-Bar Commands** on the Batch-Program Window.

5. When you complete the edit, save your changes by selecting **Save** or **Save As** from the File menu.

   Select **Save** to save your changes in the existing file.
   Select **Save As** to save your changes in a new file and then continue with step 5 on page 48.

6. Exit the Create/Modify window.

Starting Multiple Sessions without a Batch File

To start multiple sessions without a batch file:

1. For Windows NT 4.0 and Windows 95, select the icon for the session you want to start first from the Start menu.

   For Windows NT 3.51, double-click the session icon from the Personal Communications program group.

2. After it connects to the host, select one of the following choices from the File menu:

   Run the Same... to start another session with the same configuration.

   Run Other... to start a session with a different configuration.

   When the Open Other Workstation window appears, select the profile you want to start and then click **OK**.

Automatically Starting Sessions

To start one or more sessions automatically, when Windows NT V3.51, do as follows:

1. Open the Windows Startup group.
2. Drag the icon for the session batch file from the Personal Communications group into the Startup group.

For Windows NT 4.0 and Windows 95, do as follows:

1. From the Start menu, select:

   Settings
   Taskbar

2. Click the **Start Menu Programs** tab and then click **Add**.
3. Click **Browse** and then open the PRIVATE subdirectory in the Personal Communications directory.
4. Change the file type to All Files.
5. Double-click the session icon or the batch icon.
6. Click **Next** and then double-click the Startup folder.
7. Accept the icon name or type a new one.
8. Click **Finish** and then **OK** when you are done.

Stopping Sessions

To stop a session, click the **X** in the upper-right corner or double-click the upper-left corner of the session window, or select **Exit** from the File menu.

To stop multiple sessions at the same time, select **Exit All** from the File menu. All emulator sessions end, and the associated session windows are closed.

Chapter 6. Using Emulator Sessions

This chapter describes how to use the printing, editing, and file-transfer functions in an emulator session. It also describes the choices on the Appearance, Assist, and Window menus in the emulator session windows.

Printing

You can use Personal Communications to print from display or printer sessions.

From display sessions, you can print all (**Print Screen**) or part (**Trim Print**) of the screen of your session window on a workstation printer.

To print only part of the session window, drag the mouse to create a trimming rectangle around the part of the window you want to print and then select **Print Screen** from the File menu.

With printer sessions, you can print files directly from a host system to a workstation printer. Refer to the online help for more information.

Configure a printer session to designate a workstation printer as a system printer that will use either the printer definition tables (PDTs) provided with Personal Communications or the Windows printer drivers. Refer to the online help for more information.

To print, the following methods apply:

You can use Windows printer drivers that you configure through printer setup in the file menu of the session window.

You can use printer definition tables (PDTs), which give greater control over the print data stream.

For more information about printing, refer to the *Personal Communications Reference* manual.

Using the Windows Printer Driver

To set up your printer to use a Windows printer driver:

1. Select **Printer Setup** from the File menu of the session window.

   The Printer Setup window lists the supported printers.

2. Select the printer driver to be used from the **Printer** list box.

3. Confirm that the **Use PDT file** check box is not selected and then select **OK**.

   Personal Communications will now use the printer driver you selected, and the Printer Setup window is closed.

Using Printer Definition Table (PDT) Files

Printer Definition Table files define the transfer of characters and control codes to a printer, and the printer output format. If a PDT file is used, the Windows printer driver is not used, and Personal Communications generates print output based on printer control information defined in the PDT file.

© Copyright IBM Corp. 1989, 1997

Refer to the *Personal Communications Reference* manual for more information about PDT files.

To use PDT files:

1. Select **Printer Setup** from the File menu of the session window.

   The Printer Setup window appears.

2. Select the port to be used from the **Printer** list box.

   Selected PDT files are available for the port selected here.

3. Select **Setup** and then specify the paper size of the selected printer driver.

4. Select the **Use PDT file** check box and then select **Select PDT**.

   The Select PDT file window appears.

5. To use an existing PDT file, select a PDT file to be used and then select **OK**.

Scalable (Truetype) APL-Font Support on Printers

Because special APL characters are not provided for printers, when APL characters are printed, the APL fonts provided for displays are used. In some cases, APL characters are printed rather small. To print larger APL characters, you should install a scalable (Truetype) APL font as follows.

1. Open the Control Panel Folder.

   Click **Start** on the task bar.

   Move the pointer to Settings and click **Control Panel**.

2. Open the Fonts folder. (Double-click the **Fonts** icon.)

3. On the File menu, click **Install New Font**.

4. Click the drive and folder where Personal Communications is installed.

5. Double-click on **AICAPL**.

ZipPrint (PC/3270 Only)

Use ZipPrint to print PROFS or OfficeVision notes, calendars, OV documents, CMS files, XEDIT workspaces, and 3270 session screens.

Preparing to Use ZipPrint

Before you can use ZipPrint, DDE/EHLLAPI must be enabled for the sessions. To do this, select **API Settings** from the File menu and refer to the online help for detailed instructions. DDE/EHLLAPI is enabled by default.

Note

By default, PROFS-oriented functions of ZipPrint are U.S. English PROFS. You can customize ZipPrint for other languages. Start ZipPrint before you start any display sessions.

Starting ZipPrint

Start ZipPrint before you start any display sessions. The ZipPrint menu is added to the menu bar of the specified session window; then you can use it from the menu bar the same as with the other functions.

Start ZipPrint by selecting the **ZipPrint** icon in the Personal Communications program folder. This starts ZipPrint for Session A only.

You can also start ZipPrint by placing it as the first command in a Personal Communications batch file.

For more information about ZipPrint, including information about using ZipPrint for additional emulator sessions, search for ZipPrint in Help.

Using ZipPrint

Keep the following consideration in mind when using ZipPrint:

ZipPrint uses the Personal Communications File-Transfer function to print VM/CMS notes and files. On slower communication lines such as SDLC, Async (IIN), or Home3270 attachment, or when using a large packet or block size, you might experience a file-transfer timeout. If this happens, you should increase the *timeout delay* as follows:

1. Select **Transfer** from the menu barof the session window.
2. Select **Setup - Miscellaneous Setting**.
3. Increase the timeout value to 150 seconds or longer.

When using ODPS (Japanese PROFS or other DBCS PROFS), ZipPrint uses the Hankaku (SBCS) font. So when using a ZENKAKU font, such as KANJI or HIRAGANA, the font setting should be changed as follows:

1. Click **Configure ZipPrint** from the ZipPrint menuin your session window.
2. Click **Setup font**.
3. Select a ZENKAKU font such as MINCHO and GOTHIC and then click **OK**.

IBM 5586-H02 Printer (Japanese Only)

Please use IBM5585.PDT for PDT mode printing with the IBM 5586-H02 printer.

Editing

You can edit the contents of your session window using the Windows clipboard and the Edit menu.

Undo

Cancels the most recent Edit operation, except for Copy Link, and restores the contents of the session window and the clipboard accordingly.

Cut

Copies the marked area into the clipboard and removes it from the display session window.

Copy
Copies (or duplicates) the marked area into the clipboard without removing it from the display session window.

Copy Append
Copies the marked area into the clipboard without removing it from the display session window. If there is already data in the clipboard, Copy Append adds the new data to it.

Paste
Overlays the current contents of the clipboard into the session window, starting at the current cursor position.

Options
Allows you to control the behavior of pasting to a VM screen

Paste Next
If the contents of the clipboard are larger than the presentation space (session window), **Paste Next** allows you to paste the clipboard contents in consecutive parts into the session window, starting at the current cursor position.

Clear
Removes the marked area of the session window. The clipboard contents are not altered.

Copy Link
Supports the DDE Copy Link function. To start a link between Personal Communications and another application program, mark an area of the session window, select **Copy Link**, and then select **Paste Link** in the other application program.

Note

The command you should use for PasteLink or PasteSpecial depends on the application program you are using.

Unmark
Removes the clipping (or marking) rectangle. The session window and the clipboard contents are not altered.

Select All
Marks the entire session window.

Editing by Linking to Windows Application Programs

Linking to Windows application programs supporting **PasteLink** lets you paste session-window data to the windows of those application programs. You can run **CopyLink** when DDE/EHLLAPI is usable.

Confirming the DDE/EHLLAPI Settings

To check whether DDE/EHLLAPI is currently set to usable status:

1. Select **API Settings** from the File menu.
2. Make sure the **DDE/EHLLAPI** check box is selected.

   If the box is checked, DDE/EHLLAPI is set to usable status. Continue to step 4.
3. If the box is not checked:
   a. Click the **DDE/EHLLAPI** check box and then click **OK**.
   b. Stop and then start your session to enable the new settings.
4. If DDE/EHLLAPI was already set to usable status, select **OK**.

Using CopyLink and PasteLink

1. Mark the session window area for which **CopyLink** should be issued.
2. Select **CopyLink** from the Edit menu.

   If the session window is already linked with an application program, **CopyLink** appears in gray and cannot be selected. In this case, force the application program to end the linkage, or stop the application program. Then you can select **CopyLink**.
3. Start the Windows application program for the window to which an area should be copied.
4. Specify the location for which **PasteLink** should be run.
5. Issue **PasteLink** or **PasteSpecial** by using the menu for the application program.

   The contents of the marked area are pasted into the specified location in the window of the application program.

   CopyLink is now completed.

When the contents of the marked area in the session window are updated during linking, the contents of the area pasted to the window of the linked application program are also updated.

See the online help for more information about the CopyLink and PasteLink functions.

Copying Table Data to a Spreadsheet

You can use the **Cut**, **Copy**, **CopyLink**, or **CopyAppend** choices in the Edit menu to copy data in the session window to the window of a Windows spreadsheet application program.

To use **Copy**, select the **Paste** or **PasteLink** choice in the application program window into which data is to be copied.

Data in the marked area can be copied in the following three data formats, depending on the format supported by the spreadsheet for the window to which data is to be copied:

Sylk format Data format for general-purpose spreadsheets, such as Multiplan**

Biff3 format Data format for Microsoft Excel**

Wk3 format Data format for Lotus** 1-2-3**

Note

Whether application programs, such as Excel or Lotus 1-2-3, also support these data formats in subsequent versions depends on individual application program specifications.

Individual items of data in tables of the session window are divided automatically such that they are suitable for spreadsheets, and they are copied into individual cells of tables in the application program.

Copying Marked Data without Dividing It into Cells

To paste data in the marked area per line, without dividing it into individual cells, add the following lines to the workstation profile:

```
[Edit]
Sylk=N          (If Sylk format data is not divided into cells)
Biff3=N         (If Biff3 format data is not divided into cells)
Wk3=N           (If Wk3 format data is not divided into cells)
```

Copying Lines Containing Only Operational Signs

If data in the marked area contains signs, such as +, –, =, or |, the signs are regarded as being ruled lines of the table. Once they are removed, only numeric data is copied.

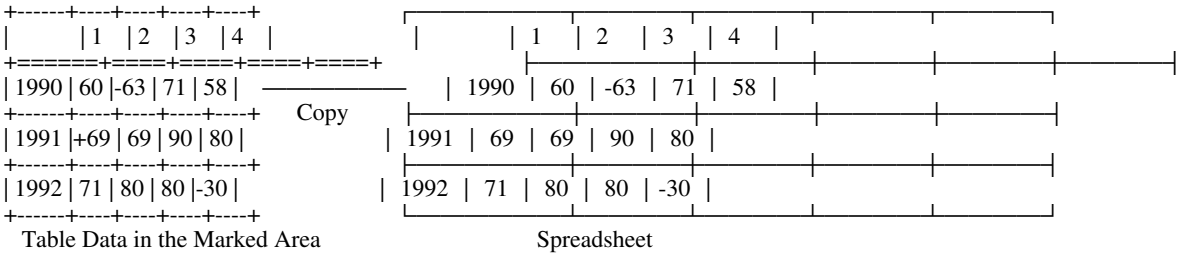

Table Data in the Marked Area — Spreadsheet

To copy these signs without replacing them with null characters, add the following lines to the workstation profile:

```
[Edit]
MaskGridCharacter=N
```

Copying Data in Cells As Text Data

Data in the marked area is treated as numeric data by default. Therefore, currency signs, such as $, and punctuation marks, such as commas, are removed before copying. To copy data containing such signs and marks as text data rather than numeric data, add the following lines to the workstation profile:

```
[Edit]
ConvertToNumeric=N
```

Data in the marked area containing signs and marks is then copied as text data. In addition, all numeric data that does not contain signs and marks is also copied as text data.

Getting Help

For information about all the tasks you can perform with the Edit menu choices, as well as how to mark and then edit an area within the window, refer to the online help:

1. Select **Index** from the Help menu.
2. When the help window displays, select **Menu Bar Commands of the Workstation Window**.
3. Select **Edit** from the list of Menu Bar Commands.

Restrictions with Home3270 Attachment

When you use the Home3270 attachment, the following edit functions are restricted:

Undo function

You cannot perform the Undo function after using the Cut, Paste, PasteNext, or Clear functions because these functions modify display areas in the protocol converter.

Cut and Clear functions

When an area to be cut or cleared contains a field attribute character or protected field, or each line in that area ends at the end of an unprotected field, the following things might occur:

Characters in an unprotected field outside the area to be cut or cleared might also be cleared.

An alarm might sound.

The cursor might not appear at the initial position.

When you perform the Cut or Clear function, specify only the minimum area required (for example, some words or one field in one line), and then confirm that the frame exists in an unprotected field.

Paste and PasteNext functions

When the area to be pasted contains a field attribute character or protected field, or the end of the paste area on each line is at the end of an unprotected field, the following things might occur:

The character to be pasted might not be written to the expected position.

An alarm might sound.

The cursor might not appear at the initial position.

When you use the paste function, paste the shortest character string possible (for example, a character string, but excluding CR/LF). Confirm that the area to be pasted is in an unprotected field.

Input Method Editor (Japanese Only)

If you are using the Input Method Editor (IME, an editor for double-byte character sets) on the Japanese version of Personal Communications and you encounter problems, install a patch file as follows:

1. Copy PCSWLIB.DLL to PCSWLIB.SAV
2. Copy PCSWLIB.NT to PCSWLIB.DLL

This file is provided on an “as-is” basis without service. If you wish to restore the original PCSWLIB.DLL file, copy PCSWLIB.SAV to PCSWLIB.DLL.

To create files with the Multiple Sessions utility on the Japanese version of Personal Communications, please delete the comments from the .bch file by selecting **New** from the File menu of the "Create/Modify Batch File" dialog before adding any files.

DBCS IME Auto-Start Hidden Switch (DBCS only)

The session default is IME auto-start, which means when the cursor moves to DBCS field, the system selected IME is invoked automatically. In PCSWIN.INI, one switch flag is added into [DBCS] section to disable this function.

[DBCS] IME_AUTO_START=N

The default is Yes. When "N" is specified in INI file, the IME would not be invoked automatically. User needs to invoke IME by pressing system keys.

DOS GAIJI Files (Japanese Only)

The GAIJI-editor J can only process GAIJI files that were created with the Windows 3.1 GAIJI editor. It cannot process DOS GAIJI files. The GAIJI-HENKAN-HOJO tool (GAIJICNV.EXE) can be used to convert DOS GAIJI files as follows.

1. C:\PROGRAM FILES\PERSONAL COMMUNICATIONS\GAIJICNV.EXE

   A dialog box to specify source file and target file appears.
2. Specify the source path/file C:\$SYS1Z24.FNT and the target path/file C:\USERFONT.FON.
3. Start a conversion by clicking the **Conversion** button.
4. Run the Windows NT or Windows 95 Gaiji-editor and capture the file that is created by step 3, which is C:\USERFONT.FON.

   Note: This step is not necessary for Window NT V3.51

For each file, you only need to convert either the 24x24 font or the 16x16 font with GAIJICNV.EXE, not both.

Using the User Font Defined on AS/400 (Japanese Only)

You can capture the user-defined font (GAIJI) defined on AS/400 into Windows NT or Windows 95 by using IBM Personal Communications Tools/400 (PCT/400), IBM Personal Communications, and the Gaiji editor of Windows 95 or Windows NT.

The capturing is done as follows:

1. PCT/400

Copying user font (CPYUSRFNT) command

This command is executed on AS/400. It copies the user-defined font image from DBCS font table to a file. Please refer to the PCT/400 documentation for details of the command.

2. Personal Communications

   File transfer facility

   This facility transfers the file member that is copied by the copying user font (CPYUSRFNT) command.

   – GAIJI-HENKAN-HOJO tool (GAIJICNV.EXE)

     This program is executed on Windows 95 or Windows NT. It converts the file copied by the copying user font (CPYUSRFNT) command to a Windows 3.1 format GAIJI file so that it can be captured by the Gaiji editor of Windows 95 or Windows NT.

     Note: This step is not necessary for Windows NT V3.51.

3. Windows NT and Windows 95

   GAIJI editor

   By using the facility to capture the Windows 3.1 format GAIJI file, the file converted by the GAIJI-HENKAN-HOJO tool (GAIJICNV.EXE) program is captured.

Example

1. Copy the user-defined font images from the DBCS font table to a file by using the copying user font (CPYUSRFNT) command.

   a. ADDLIBLE QPCT (Add QPCT library to the library list)
   b. CPYUSRFNT (Copying fonts, using default parameter)

   The physical file USRFNT is created in library QTEMP and user-defined fonts are copied to member USRFNT from the DBCS font table.

2. Download QTEMP/USRFNT(USRFNT) to the PC as file USRFNT.FNT by using the file transfer facility of Personal Communications.

3. Convert USRFNT.FNT by using the GAIJI-HENKAN-HOJO tool (GAIJICNV.EXE).

   C:\PROGRAM FILES\PERSONAL COMMUNICATIONS\GAIJICNV.EXE

   (This command runs GAIJICNV.EXE.)

   As the source file, specify the USRFNT.FNT file that you downloaded in step 2. Enter it as c:\usrfnt.fnt

   As the target path/file, specify c:\userfont.fon)

   Start the conversion by clicking the **Conversion** button.

4. Run the Windows 95 or Windows NT GAIJI editor to capture the file that is created.

What Is Different from Windows 3.1

1. The GAIJI-HENKAN-HOJO tool (GAIJICNV.EXE) program is used to convert the USRFNT.FNT. Font Setup Utility (SETUFNTV.EXE), which is provided by PCT/400, is not used. Therefore, Font Setup Utility (SETFNTV.EXE) does not need to be downloaded from AS/400.
2. To capture the font into Windows 95 or Windows NT, the GAIJI editor of Windows 95 or Windows NT is used.

Transferring Files

Personal Communications File Transfer enables the transfer of one or more files between a host system and workstation. You can define file transfer options in advance to help you transfer a variety of files quickly and easily.

File Transfer is quite different from the PC400 function, Data Transfer, which is described on page 75. The main differences are listed here:

Type of Transfer	Products required on an AS/400 system	Access Method	Sending and receiving unit	Type of connection to an AS/400 system
File Transfer	Personal Communications Tools (APVAFILE)[1]	Transfer menu in session window	Entire file	Display session
Data Transfer	PC Support/400 V2R2 or V2R3 or OS/400 V3R1 or later[2]	Data Transfer in the Emulator Utilities folder	Field, record, or file in a database	SNA connection (with or without a display session)
[1] APVAFILE does not apply to Korean.				
[2] OS/400 provides the host transaction program for Data Transfer.				

With Personal Communications, you can perform the following file transfer functions:

Send files to the host system

Send files using the Transfer menu or, from 3270 sessions, the SEND command from the DOS prompt.

You can also send files by using an EHLLAPI or DDE application or a macro that invokes file transfer.

Receive files from the host system

Receive files using the Transfer menu or, from 3270 sessions, the RECEIVE command from the DOS prompt.

You can also receive files by using an EHLLAPI or DDE application or a macro that invokes file transfer.

Create, test, replace, and delete templates

Create a template to have Personal Communications automatically generate a workstation or host file name and transfer type when you select a file to be sent or received.

It is not possible to define a file transfer template with the long file name naming convention.

Define transfer types
Define up to 16 transfer types for each host system. Text, binary, and append (except for CICS) are initially set as transfer types.

Select, create, and customize translation tables
Select translation tables to define which translation table is used during file transfer.

Select, create, and customize DBCS translation tables
Select DBCS translation tables to define which DBCS translation table is used during file transfer. (Japanese and Korean only.)

Import or export files (PC/3270 only)
Import/Export is an office system communication program and an application program run on the IBM Customer Information Control System (CICS). The import/export function makes it possible to import or export Final Form Text (FFT), Revisable Form Text (RFT), and PC documents.

When you export a file from the host, your workstation receives the file you exported and an interchange document profile (IDP) file. Before you can import a file to your workstation, you need to create an IDP file with transmission information.

Create interactive document profile (IDP) files (PC/3270 only)
An IDP file contains document header information, has the same name as the file to be transferred, and has the extension .IDP.

To create an IDP file, select **Setup** from the Transfer menu.

Note

When you transfer a file on a Telnet5250 session, you cannot transfer a file that includes FFEF. The current version of the AS/400 Telnet program misinterprets FFEF in the data as an end-of-record marker.

ASCII Host File Transfer

When you are transferring files between two computers, specific protocols must be followed, and files can be transferred only when your PC uses the same protocol as the host. Personal Communications supports the XMODEM and YMODEM public domain protocols.

For XMODEM, Personal Communications uses the XMODEM and XMODEM1K protocols. XMODEM is a block-oriented, error checking protocol that is a single file, half duplex protocol. XMODEM1K is the same as XMODEM, except that it uses larger 1024 byte (1K) packets.

The YMODEM protocol is similar to the XMODEM1K protocol in that it transfers data in 1K packets, but it also allows multiple files to be sent in one transfer.

The YMODEMG protocol transfers multiple files like YMODEM, but performs no error detection or error correction. It can be much faster than YMODEM, but requires an error-free data connection.

With Personal Communications, you can perform the following file transfer functions to or from ASCII hosts:

Send any type of files to the host system
Send files using the Transfer menu using XMODEM, YMODEM, XMODEM1K, or YMODEMG.

Receive files from the host system
Receive files using the Transfer menu and XMODEM, YMODEM, XMODEM1K, or YMODEMG.

Create, test, replace, and delete templates
Create a template to have Personal Communications automatically generate a workstation or host file name and transfer type when you select a file to be sent or received.

Getting Help

For more information about transferring files, refer to the online help:

1. Select **Procedures** from the Help menu.
2. When the help window displays, scroll down to **Transferring Files**.
3. Select choices from that list for detailed information.

Setting Up a Session Window's Appearance

You can use the following functions from the Appearance menu to define the appearance of your session window:

Display Setup
Customize a variety of characteristics, such as the cursor, pointer, rule line, and trimming styles, graphics, sound, DBCS, and color palette, in the display session.

Color Mapping
Set the colors used in session windows.

Font
Choose the font to use for display session windows, the style, and whether it will be an automatic sizing font or a fixed size font. If you use a fixed size font, you can also choose its size. The set of fonts from which you can choose depends on the type of display you are using.

Note: You cannot change the font size when the session window is maximized.

Window Setup
Change the appearance and title of the session window and change the session icon.

Tool Bar
Add, edit, delete, move, copy, and rearrange buttons on the tool bar. for each tool bar item. The settings are stored in a *.BAR file.

Tool Bar Setup

The tool bar displays under the menu bar in your session window to allow quick access to the Personal Communications functions, commands, and defined macros.

Use the tool bar pop-up menu to quickly and easily create, edit, and delete tool bar items, as well as to save and load customized tool bars. When you customize the tool bar, you can change the order of items, add and delete items, change the function, title, or graphic associated with any item, change the fonts, colors, and other tool bar visual style elements.

To customize your tool bar, select **Tool Bar** from the Appearance menu, or display the Tool Bar pop-up menu by clicking on the right mouse button while pointing at any part of the tool bar.

For information about customizing the tool bar, refer to the online help from the Tool Bar Setup window.

If you want to hide the tool bar, refer to “Showing or Hiding the Menu Bar and Tool Bar.”

Showing or Hiding the Menu Bar and Tool Bar

You can show or hide the menu bar or tool bar. To do this:

1. Click the upper left corner of the session window to display the system menu.

   Hide Menu Bar appears when the menu bar is shown

   Show Menu Bar appears when the menu bar is not shown

   Hide Tool Bar appears when the tool bar is shown

   Show Tool Bar appears when the tool bar is not shown
2. To hide either the menu bar or tool bar, select **Hide Menu Bar** or **Hide Tool Bar**.
3. To show either the menu bar or tool bar, select **Show Menu Bar** or **Show Tool Bar**.

   If you hide the menu bar, the Popup Menu Bar choice is added to the system menu. The Popup Menu Bar shows a cascading menu that contains all commands in the hidden menu bar.

Windows Setup

Note

If you set the **Maximized Style** (in the Windows Setup dialog) to **Without Title Bar**, then the **Minimize All Windows** option on the Windows taskbar will not have any effect. To minimize the window, press **Alt-Space** and select **Minimize**.

Getting Help

If you're not sure how to set the session window's appearance options, view the detailed instructions in the help.

1. Select **Procedures** from the Help menu.
2. When the help window appears, search for appearance or scroll down to **Changing the Screen Appearance**.

   Select choices from that list for detailed information.

Setting Up and Using the Assist Functions

Personal Communications provides auxiliary functions that let you operate the system more efficiently. You can use the following functions from the Assist menu of the session window.

Keyboard and macro functions
Hotspots setup
Keyboard setup
Popup keypad setup
Mouse setup
Macro setup
Scripting functions
Web browser setup
Tab setup

This section describes these auxiliary functions, and explains how to set up and use them.

Keyboard, Macro and Script Functions

A Keyboard/Macro/Script Function command lets you run scripts, macros or Personal Communications-supplied key functions without using the keyboard. Run the scripts, macros or key functions from the current cursor position in the session window.

Scripting Functions

You can write, execute and terminate VBScripts in the emulator environment. These scripts have access to the EHLLAPI automation API. The programming environment includes methods, class descriptions and properties. VBScript is a subset of the Visual Basic programming language.

Macro Functions

A macro is a sequence of key or mouse actions and host commands that you can perform with a single action, such as a keystroke. Before you can use a macro function, you need to define it. For more information, see "Macro/Script Setup" on page 71.

Key Functions

Personal Communications provides many key functions that can be assigned to the keys on the keyboard, the mouse buttons, or the buttons of the pop-up keypad. You can also use them to generate macros.

CM Mouse (Single Byte Character Set)

CM Mouse is the part of Personal Communications that provides intelligent and programmable mouse support for 3270 and 5250 emulation sessions. It allows users of host applications to point-and-click to perform host functions. With its unique screen-recognition technology, CM Mouse “hotspots” change instantly to give context-sensitive functions to each host application window.

CM Mouse pop-up menus give you instant access to lists of options and functions simply by pointing and clicking. Pop-up menus can simplify the selection of commands and options, and can automate repetitive tasks.

For more information about CM Mouse, see *CM Mouse Support User's Guide and Reference*.

Hotspots Setup

A *hotspot* is an area of the session window on which you can double-click the left mouse button to perform a command or function. You do not need to use the keyboard. For example, you can double-click a function key number to perform the function.

3D Hotspots

Select **Show hotspots** to get three dimensional (3D) hotspots; these only require a single click, and they stand out on your screen.

You can define the following actions for a hotspot:

Click on a URL to connect to a World Wide Web site.

Simulate function keys.

Play a macro that has the same name as the character string you select on the session window.

Enter the selected string at the cursor position.

Simulate the Enter key at the cursor position.

For VT, simulate two sets of function keys, PF1 through PF4 and F6 through F20.

Using Hotspots

Note

You must have a mouse to use hotspots.

To use a hotspot:

1. Move the mouse pointer to the hotspot displayed in the session window.
2. Double-click the left button of the mouse, except for 3D hotspots, which only require a single click.

Personal Communications determines whether you have specified a hotspot function that matches what appears at the position of the mouse pointer. If so, it processes the hotspot. When two or more hotspots are specified for a single character string, the *first retrieved hotspot* is processed.

Hotspots are retrieved in the following order:

(1) Point-and-select (connect to Web site using URL)
(2) PFnn, FPnn, Fnn, nn
(3) Point-and-select (run the macro)
(4) Point-and-select (enter the selected string)
(5) Point-and-select (enter at the cursor position)

Keyboard Setup

You can use Keyboard Setup to modify the function defined for each key on the keyboard, except some reserved keys.

You can define the following functions for the keys.

Performing a key function
Playing a macro
Entering characters

Note

By default, the Enter function is assigned to the Ctrl key. To change this assignment or, if you are using a non-IBM compatible keyboard and the Enter key does not work properly, you need to customize your keyboard.

Keyboard File

When you specify a key, you can save the new keyboard layout in a file (.KMP). If you create two or more keyboard files, you can alternate between them as required.

To assign a function to a key on the keyboard:

1. Select **Keyboard Setup** from the Assist menu or click the map icon on the tool bar.
2. When the Keyboard Setup window appears, select **Customize**.
3. Assign the key functions, referring to the online help for detailed instructions.
4. Save your changes and exit the Customize Keyboard window.
5. Select **OK** after completing the setup.

You can reset either the entire keyboard or specific keys to defaults.

To reset the entire keyboard, set the current keyboard to **IBM Default** in the Keyboard Setup window.

To reset specific keys, select a key in the Customize Keyboard window and then select **Default** from the Current Actions for Selected Key box.

Note

There are seven keys that you cannot redefine and they are gray or dimmed in Keyboard Setup; these keys are: Alt, AltGr, Print Screen, Scroll Lock, CapsLock, NumLock, and Shift.

Customizing the VT Emulator Keyboard

If you are using a VT emulator session, you can represent ASCII control characters in the character strings that you define for your customized keyboard.

Use the # character to represent the CTRL key, following it by any character from the following list (only upper-case alphabetics are allowed):

@ABCDEFGHIJKLMNOPQRSTUVWXYZ[\] _

Use ## to represent an actual #. For example, 123##45 represents 123#45.

If you follow # with any other character than those shown, you will get an error message:

PCSKBD160 - Unrecognized key-action: "character string

For example, the error for the string "#a is

PCSKBD160 - Unrecognized key-action: "#a

Here is the set of control characters:

Character pair	Control	Notes
#@	Control-@	NULL
#A	Control-A	
through		
#Z	Control-Z	
#[	Control-[	ESC
#\	Control-\	
#]	Control-]	
#	Control-	
#_	Control-_	

Because the *.KMP file can be edited, there is a run time check to ensure that the character string is correct. If "### is processed, then # will be displayed, followed by a beep to signify that the entire character string was not played. If "123#a456 is processed, then 123 will be displayed, followed by a beep.

Pop-Up Keypad Setup

The pop-up keypad is a small window in which some buttons are arranged. To display the pop-up keypad, put the pointer anywhere in the session window and press the right mouse button.

You can allocate the following functions to these buttons:

A standard key function provided by Personal Communications
A user-specified macro
A character entry

To perform these functions, you only need to click a button on the pop-up keypad with the left mouse button.

To view the description of a short-name key function or macro, click the right mouse button while pointing at one of the function or macro names.

Pop-Up Keypad File

You can specify the number of buttons displayed in the pop-up keypad, the functions allocated to those buttons, and colors of the buttons. You can save the specified pop-up keypad contents in a pop-up keypad file (also referred to as a *poppad* file).

A pop-up keypad file (*.PMP) contains the information for the number of buttons displayed in the pop-up keypad, the functions allocated to those buttons, and color information. You can define which pop-up keypad file is allocated to the pop-up keypad.

Using the Pop-Up Keypad

To use a pop-up keypad:

1. With the mouse pointer anywhere in the session window, click the right mouse button.
2. Select **Pad 1, Pad 2, Pad 3**, or **Pad 4**.
3. Click the required button in the pop-up keypad.

To set up the pop-up keypad:

1. Select **Popup Keypad Setup** from the Assist menu.
2. When the Popup Keypad Setup window appears, set the required items, referring to the online help for detailed instructions.

   If you want to edit the pop-up keypad file, select **Customize** and then make your changes.
3. Select **OK**. The pop-up keypad you selected is ready for use.

Mouse Setup

The **Mouse Setup** command lets you allocate functions to the right and left buttons of the mouse; this enables you to perform the following actions without having to use the keyboard:

Running the Personal Communications-supplied key functions
Running the user-defined macros
Running character strings

Mouse File

You can save the functions defined for the mouse buttons in a mouse file (*.MMP). You can create two or more mouse files and switch between them as required.

To set up the mouse and assign functions to the mouse buttons:

1. Select **Mouse Setup** from the Assist menu.

   The current settings appear in the Mouse Setup window.
2. Set up the required items, referring to the online help for detailed instructions.

If you want to create or edit a mouse file:

a. Select **Customize**.

b. When the Customize Mouse window appears, allocate functions to the right and left buttons of the mouse. These appear in **Current Action for Mouse Button**.

c. Select the required functions from **List of Key Actions**.

d. Save your changes and then select **OK**.

3. Select **OK**.

   The mouse setup is complete.

Macro/Script Setup

A macro is a sequence of key or mouse actions and host commands that you can perform with a single action, such as a keystroke. You can edit an existing macro or create a new macro by selecting **Macro/Script Setup** from the Assist menu.

A script is a VBScript program that is a subset of the Visual Basic programming language. For information on VBScript, see the on-line help pages. Scripts cannot be used on Windows NT V3.51 systems.

Using a Macro/Script

You can use a macro or script in various ways. Table 3 lists examples of how you can set up and then use macros and scripts.

Table 3. Macro Use Examples and Settings

If you want to...	Do this...
Automatically play a macro or script when your session starts.	Set an **Auto-Start Macro/Script**.
Play a macro or script while attached to a host application.	**Start Playing Macro/Script**.
Play a macro or script with the keyboard or macro function.	Use the **Keyboard/Macro/Script Function**.
Click on a hotspot to play a macro or script.	Set a **Hotspot**.
Assign a macro or script to a pop-up keypad button.	Customize the **Pop-Up Keypad** file.
Press the mouse button to play a macro.	Customize a **Mouse** file.
Press a key on the keyboard to play a macro or script.	Customize a **Keyboard** file.

Creating a Macro

You can create a macro manually or by recording some of your interactions with the host system, such as your logon procedure.

To create a macro manually:

1. Select **Macro/Script Setup** from the Assist menu.
2. When the Macro/Script Setup window appears, select **Customize**.
3. When the Customize Macro/Script window appears, select **File**, then **New**, then **Macro**, and edit the macro. You can type statements directly or select functions, characters, or even other macros, from the list of Key Actions in the **Select a Key-Action** subpanel.

   Refer to the online help for detailed information.

4. Click **File**, then **Save** to save the macro file.

Macro Statements

You can use the following statements when you create a macro:

Key function
Use Personal Communications-supplied key functions

Macro
Define a macro within another macro but you cannot create a macro in a permanent loop where the first macro is repeatedly called at the end of the macros.

Character
Use any characters in the **Character** list in the Customized Macro window.

Character string
Use character strings you can type from the keyboard. You must use a double quotation mark (“) at the beginning of the character string.

Wait condition
Specify wait conditions to stop the process until the specified time has elapsed or the status satisfying the specified condition occurs.

Tokens
You can use tokens, such as goto and run, to add logic.

Macro loop considerations

If you use a GOTO and a label in a macro to create a loop, you may experience unpredictable behavior if that loop executes a large number (more than 1000) of iterations.

Creating a Script

Scripts are created manually; you cannot record them. Scripts, however, allow a higher level of programming control unavailable with macros. Scripts cannot be used on Windows NT V3.51 systems.

To create a script:

1. Select **Macro/Script Setup** from the Assist menu.
2. When the Macro/Script Setup window appears, select **Customize**.
3. When the Customize Macro/Script window appears, select **File**, then **New**, then **Script**, and edit the script. The **Select a Key-Action** subpanel, in gray, is not available for creating scripts.

   Refer to the online help for detailed information.
4. Click **File**, then **Save** to save the script file.

Setting Up a Macro or Script to Autostart

To set up a macro or script to autostart:

1. Select **Macro/Script Setup** from the Assist menu.

   The Macro/Script Setup window appears.
2. Set a macro or script to auto-start when your workstation starts.
3. Refer to the online help for detailed instructions and then select **OK** after completing your setup.

Recording Macros

To start macro recording, select **Start Recording Macro** from the Assist menu, type the macro name, and then select **OK**.

To quit macro recording, **Cancel Recording Macro** from the Assist menu. The recording operation is canceled, and the macro is not saved.

To pause macro recording, select **Pause Recording Macro** from the Assist menu. The recording operation stops. To restart recording, select **Resume Recording Macro**.

To stop macro recording, select **Stop Recording Macro** from the Assist menu. Recording ends and the macro is saved in a specified file.

Playing Macros and Scripts

To start macro or script playing, select **Start Playing Macro/Script** from the Assist menu, select the macro or script, and then select **OK**. The selected macro starts to play.

To stop macro or script playing, select **Quit Playing Macro/Script** from the Assist menu. The macro or script stops playing.

Web Browser Setup

Web Browser Setup allows you to define a preferred web browser and to use it rather than the one that comes with your operating system. On Windows NT V3.51 systems, you must define a preferred web browser because no default browser is available.

Tab Setup

For VT, Tab Setup allows you to define tab stops for your VT session.

Managing Emulator Sessions

Personal Communications provides the following functions, in addition to those provided by Windows, for those who work with several open session windows simultaneously. These functions allow you to manage your session windows easily and quickly.

Jump Use **Jump** to switch between the currently opened session windows.

You cannot use Jump to switch to a session window that is currently hidden. Instead, select **Show** from the Window menu to display the session window on the screen. Then, select **Jump**.

Hide Use **Hide** to stop displaying a visible session window.

You cannot hide all sessions. At least one session is always shown.

Show Use **Show** to display a session window that was previously hidden with **Hide**.

View Use **View** to display a previously-saved arrangement of windows, or to save an arrangement of windows.

Personal Communications can save and restore the following information relating to the session window view:

Position and size of each window
Window status (standard, minimized, or maximized)
Window font

You can save view information for up to eight windows.

Getting Help

For more information about managing session windows, refer to the online help:

1. Select **Procedures** from the Help menu.
2. When the help window appears, scroll down to **Managing Workstation Windows**.

   Select choices from that list for detailed information.

Chapter 7. Emulator Utilities

Personal Communications provides the following utilities:

Data Transfer
Transfer data from the AS/400 system to your workstation, or from your workstation to the AS/400 system. (Record-level data transfer).

32-bit ODBC Administrator
Use the 32-bit ODBC Administrator to add, configure, or delete an ODBC data source.

Database Access
After you have configured a data source, this utility allows read-only access to data in the selected database.

CM Mouse
Provides intelligent and programmable mouse support for 3270 and 5250 emulation sessions.

DOS EHLLAPI
Allows DOS-based EHLLAPI programs to communicate with the 32-bit Personal Communications emulator.

Menu-Bar Customization
Provides a means of changing the content of the menu-bar of the Personal Communications session window.

Multiple Sessions
Provides the capability to run multiple host sessions using a single icon.

ZipPrint
Use ZipPrint to print PROFS or OfficeVision notes, calendars, OV documents, CMS files, XEDIT workspaces, and 3270 session screens.

Data Transfer

Personal Communications Data Transfer enables you to transfer data between an AS/400 system and your workstation. To use the Data Transfer function, select the **Data Transfer** icon.

Transferring data is quite different from transferring files, which is described in "Transferring Files" on page 62.

Requirements

Before you can transfer data with PC400:

You must have an SNA connection to an AS/400 system.

IBM PC Support/400 (5738-PC1) must be installed on your AS/400 system, unless IBM OS/400 Version 3 or later is installed.

Data transfer cannot be used over TN5250 connection types.

© Copyright IBM Corp. 1989, 1997

There are two types of data transfer, depending on the direction of the transfer.

Data sending

Data is transferred from your workstation to the AS/400 system. You can transfer data to any of the following destinations:

Existing members in an existing AS/400 physical file
New members in an existing AS/400 physical file
New members in a new AS/400 physical file

Note

You cannot transfer data from a workstation file to an AS/400 logical file.

Data receiving

Data is transferred from the AS/400 system to your workstation.

While receiving data from the host, you can specify the data to be received and where the data is to be output.

Receivable data includes:

An entire AS/400 file
Part of an AS/400 file
Data combined from several AS/400 files
Summary of record groups

Specify the following output destinations:

Display
Disk
Printer

Also, you can specify the numeric value format.

For more information about data transfer, refer to the *Personal Communications Reference* manual.

32-bit ODBC Administrator

ODBC is a programming interface that enables applications to access data in database management systems that use Structured Query Language (SQL) as a data access standard.

Use the following steps to set up the Personal Communications ODBC data source:

1. Select the **32-bit ODBC Administrator** icon from the Personal Communications ODBC program group. The Data Sources window appears.
2. Select the IBM Personal Communications DB2/400 or IBM Personal Communications DB2/MVS data source in the Data Sources (Drivers) list. Then select **Configure...**. The Personal Communications Data Source Setup window appears.
3. Specify the information to set up the data source.

4. If you want to specify detailed conditions for the data source, select **Options...**. The Personal Communications Option Parameters window appears.
5. Specify each parameter to set up in the data source; then select **OK** to exit the Personal Communications Option Parameters window.

   If you want to restore the values of all items to their defaults, select **Default** in this window.
6. When you are finished specifying the data source, select **OK**.

Note

Personal Communications uses ODBC 32-bit drivers. Applications, such as Lotus 1-2-3 included in the Lotus SmartSuite 96 package, require a 16-bit driver and will not work with Personal Communications. You should see your product vendor for a version that utilizes 32-bit ODBC drivers (Lotus 1-2-3 included in Lotus SmartSuite 97 for example).

Database Access

Database Access lets you access host or PC databases and retrieve data, using ODBC drivers. If you specify the conditions for accessing data in each window, the desired query can be created automatically.

From Database Access, you can:

See and modify the SQL statements that are created automatically.

See available database-table lists.

Copy spreadsheet data to the clipboard.

Show data in the grid in the main window spreadsheet, send data to other applications (for example, Lotus 1-2-3 or Microsoft Excel), or send data to a printer.

Before using Database Access, you should read Help information on:

Database size limits

Installed programs

CM Mouse

CM Mouse allows users of host applications to point-and-click to perform host functions. Clicking a CM Mouse on "hot spots" gives true context-sensitive function to each host application screen. Hot spots are not fixed function or fixed placement, but change dynamically as you move through a host application.

CM Mouse popup menus give you instant access to lists of options and functions with a simple point-and-click. Popup menus can simplify command selection, choose options, and automate repetitive tasks. The CM Mouse popup menu editor

allows you to quickly and easily customize the menus to your own purposes or to create new menus.

The CM Mouse scripting language is powerful enough to automate complex host interactions, yet simple enough for even novice users.

See the *IBM eNetwork CM Mouse Support User's Guide and Reference* for more information.

Menu-Bar-Customization

This utility enables you to remove items from the menu-bar of the Personal Communications session window. The changes affect only the session that you customize, so you can make different changes to each session. You can remove three types of item:

1. A menu-bar command, such as **File**, **Edit**, **Transfer**, **Communication**
2. A pull-down-menu command, such as, **New**, **Open...**, **Color Mapping**, **Configure**
3. A separator-line that resides between two commands in a pull-down menu

The instructions to modify the menu-bar are saved in the workstation profile that you choose and become active the next time you start the session.

Multiple Sessions

The Personal Communications Multiple Sessions Batch Program allows you to start several host sessions by clicking a single icon; the necessary commands are specified in a batch-file (*.BCH). You can include in a batch file other programs, which may communicate with a host session via the DDE or EHLLAPI interface.

It is also possible to start multiple sessions without a batch file.

ZipPrint

ZipPrint is a 3270 utility that enables you to print PROFS or OfficeVision notes, calendars, OV documents, CMS files, XEDIT workspaces, and 3270 session screens. By default, it uses the Windows printer currently set up for the host session, but you can change it if you wish.

You do not have to install ZipPrint — you just start it. It adds itself to the menu-bar of the sessions for which you define it, so you can use it in the same way as any other menu-bar function. You must start ZipPrint before you start a session in which you want to use it.

ZipPrint needs the DDE/EHLLAPI, so you must make sure that this is enabled for the sessions for which you want to use ZipPrint. (It is enabled by default, but you should check that it has not been turned off.)

For more information about ZipPrint, see “ZipPrint (PC/3270 Only)” on page 54.

Chapter 8. AS/400 Emulator Utilities

Personal Communications provides the following AS/400 utilities:

PC Organizer
Run Windows applications from a 5250 display session.

Text Assist (SBCS only)
Use Text Assist to create or edit a document or short messages.

AS/400 Network Drives (Shared Folders)
Provides access to AS/400 folders as if they were disk drives on your workstation.

PC Organizer

You can use the PC Organizer to run DOS commands and applications or Windows applications from a 5250 display session.

AS/400 Requirements

Before you can use the PC Organizer, one of the following programs must have been installed on the AS/400 system:

Client Access/400 (or OS/400 V3 or later)
PC Support/400 (5738-PC1)

Starting the PC Organizer

To start the PC Organizer:

1. Start a 5250 display session.
2. Sign on to the AS/400 system.
3. Enter the following command on the AS/400 command line:

   STRPCO PCTA(*NO)

Note

PC400 does not support the PC Text Assist (PCTA) function, so you should specify this parameter with ***NO**. Even if you specify ***YES**, you cannot use the PC Text Assist function provided by the PC Support/400 Workstation Feature.

You can now use the PC Organizer functions in a 5250 display session by using one of the following methods:

Display and then select choices from the menu.

To display the PC Support/400 or Client Access/400 Organizer menu, enter:

GO PCOMNU

© Copyright IBM Corp. 1989, 1997

Enter PC Organizer commands.

To start the PC Organizer functions, enter:

STRPCCMD

PCO.EXE Message

When you run a workstation command or program, you might receive a message that the PCO.EXE program is not active. You can ignore this message, because it is not necessary for PC400 to activate PCO.EXE.

Getting Help

Refer to the online help for more information about using the PC Organizer.

1. Select **Procedures** from the Help menu.
2. When the help window appears, search for organizer or scroll down to **PC Organizer (5250 Session)**.

   Select topics in the list to view information about starting and using the PC Organizer, using the PC Organizer menu, and the differences between the PC Organizer provided with PC400and PC Support/400.

Text Assist (SBCS Only)

With Personal Communications, you can use the improved text editing capability of Text Assist provided by the OfficeVision/400 word processing function to create a document or short messages, or to edit an existing document.

To start the text assist function, enter WRKDUC on the 5250 command line.

For more information about using Text Assist, refer to the documents for the OfficeVision/400 program.

The Text Assist function in Personal Communications is a “Controller Text Assist,” not the “PC Text Assist” supported by PC Support/400 Workstation Feature.

Controller Text Assist in Personal Communications provides the following functions that are not included in PC Text Assist:

Line commands
132 columns

Controller Text Assist in Personal Communications does not, however, provide the multicolumn edit function that is included in PC Text Assist.

Note

In the Text Assist environment, Alt key functions are assigned to the Ctrl key state to avoid conflicts with existing emulator functions. For example, the Word Underscore (WrdUnd) key is Ctrl+W rather than Alt+W. Many of these functions can be remapped to the Alt key state without conflicting with emulator functions.

When you draw a line using the cursor draw option of the OfficeVision/400 program, the insert mode is not available.

AS/400 Software Requirements

The AS/400 system must have one of the following programs installed to support the Text Assist features:

OS/400 V2R2.0 with cumulative PTF C3285220 with PTF SF14687
OS/400 V2R3.0 with PTF SF14495
OS/400 V3R0.5
OS/400 V3R1.0, or later

Text Assist Key Functions

Following is a list of OfficeVision/400 Text Assist key functions:

Function	Description
Begin of Line	Moves the cursor to the beginning of the line
Begin Bold	Begins bold highlighting
Bottom of Page	Moves the cursor to the bottom of the page
Carrier Return	Ends a line of text or a paragraph by inserting a carrier return
Center Text	Centers a line of text
End of Line	Moves the cursor to the end of the line
End of Page	Inserts an “end of page” character at the cursor position
End Bold/Underscore	Ends bold highlighting and underlining
Half Index Down	Begin subscript or end superscript
Half Index Up	Begin superscript or end subscript
Insert Symbol	Displays a menu for special symbols
Display Text Codes	Shows hidden text controls
Next Column	Inserts a “next column” instruction at the cursor position
Next Stop Code	Moves the cursor to the next stop code symbol
Required Backspace	Moves the cursor one space to the left
Required Space	Inserts a required space to keep words together on a line
Required Tab	Indents a block of text
Stop Code	Inserts a stop code at the cursor position
Top of Page	Moves the cursor to the top of the page

Function	Description
Begin Underscore	Begins underlining text
Word Underscore	Underlines the word that starts at the cursor position

AS/400 Network Drives (Shared Folders)

The AS/400 system uses a structure called a folder to store and organize documents, mail, and other related objects. Personal Communications lets you share these folders and store both AS/400 documents and your workstation files in them.

The Network Drives function lets you access a folder on the AS/400 system as if it were a drive on your workstation. For example, a folder on the AS/400 system could be assigned to drive E on your workstation; you could then access drive E in the same way as you access drive C on your hard drive.

You can use the Network Drives function to:

Use AS/400 security to limit access to workstation files.

Share data with multiple users at the same time.

Back up workstation files to an AS/400 folder.

Use workstation commands or AS/400 functions to work with workstation files.

For Windows NT, only version 4.0 is supported.

Setting Up AS/400 Network Drives

To use an AS/400 Network Drive, you must have an SNA connection - for example, Twinax or LAN via IEEE 802.2 - to the AS/400; this can be a display or printer session, or a separate APPC connection defined through SNA Node Configuration. You cannot use a TCP/IP or IPX connection.

If several AS/400s are interconnected and you want to use a network drive on more than one of them, you need a direct link only to one; since all AS/400s are SNA Network Nodes, a connection to any of them will give you access to the others - you need only add, to the configuration for the direct link, a Partner LU definition for each other AS/400. You can do this through SNA Node Configuration.

Assigning (Mapping) Drives

Assigning network drives on an AS/400 is much the same as on a LAN server. On both Windows 95 and Windows NT, the easiest way is through the Network Neighborhood:

1. Open the Network Neighborhood
2. Click the AS/400 server on which the folder you want to assign a drive to resides
3. Click the folder, then click **File** on the menu-bar; or right-click on the folder
4. Click **Map Network Drive**, then choose a drive letter. If you want the drive to be connected automatically every time you log on to Windows, check the Reconnect at Logon box.

Note

If you have checked Reconnect at Logon, you will be asked to provide an AS/400 user ID and password whenever you log on to Windows. The default .ACG file will be used in this case. It is recommended that the Reconnect at Logon box not be checked.

There are other ways to access AS/400 folders; you can use whichever method is most convenient:

1. With the Windows Explorer
2. With the NET USE command from a DOS prompt
3. By using a UNC name

Chapter 9. Enabling Client/Server Applications

Personal Communications's support for APPN end nodes lets you take advantage of APPN network nodes. An APPN network allows automatic locating of partner applications and dynamic, optimized route selection. These features allow workstations to communicate more flexibly with other systems in the network.

Personal Communications also provides support for 32-bit APPC and CPI-C APIs, which provide convenient ways for 32-bit client application programs on your workstation to communicate with those on other workstations.

Configuring a Node

Before you can take advantage of the client APIs and communicate with other application programs, you first need to configure Personal Communications as an SNA end node.

To configure the SNA node:

1. For Windows NT 4.0 and Windows 95, from the Start menu, select:

   Programs
   IBM Personal Communications
   SNA Node Configuration

   For Windows NT 3.51, in the Personal Communications program group, double-click the **SNA Node Configuration** icon.

   The Personal Communications SNA Node Configuration window appears.

2. Select the necessary Configuration Options in the order listed on the window.

   To select an option, click it and then click **New...**.

   Enter the required information, or select values for the session parameters on the Basic property sheet and then click **OK**. Click **Help** to display parameter details.

3. Click **Save** or **Save As** from the File menu.

4. Type the file name and then click **Save**. Note that you can choose the file type and where to save this file. The default file type is *.ACG and the default directory is the PRIVATE subdirectory in your Personal Communications directory.

   When you save an SNA configuration file, you are also making it the default.

5. Click **Exit** from the File menu.

Tip

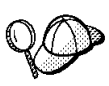

If you have more than one configuration file, you can apply additional configuration files to an active node. Refer to the help in the SNA Node Operations section of the product for details.

© Copyright IBM Corp. 1989, 1997

Starting the SNA Node

1. For Windows NT 4.0 and Windows 95, to start the SNA node, from the Start menu, select:

   Programs
   IBM Personal Communications
   Administrative and PD Aids
   SNA Node Operations

   For Windows NT 3.51, in the Personal Communications program group, double-click the **SNA Node Operations** icon.

   The Personal Communications SNA Node Operations window appears.

2. Click **Start Node...** from the Operations menu.

   The Select configuration file to use... window appears.

3. Double-click the configuration file (*.ACG) that defines the node you want to start.

Note

Another way to start the SNA node is to use the command line. The command to use is CSSTART. For the proper syntax see the “SNA Node Operations” chapter of the *Personal Communications Reference* manual.

Stopping the SNA Node

1. For Windows NT 4.0 and Windows 95, to stop the SNA node, from the Start menu, select:

   Programs
   IBM Personal Communications
   Administrative and PD Aids
   SNA Node Operations

   For Windows NT 3.51, double click on the **SNA Node Operations** icon.

   The Personal Communications SNA Node Operations window appears.

2. Click a resource in the Alias column.

3. Click **Stop Node...** from the Operations menu.

Note

Another way to stop the SNA node is to use the command line. The command to use is CSSTOP. For the proper syntax see the "SNA Node Operations" chapter of the *Personal Communications Reference* manual.

APING Requirements

If you wish to run the Check Connection (APING) utility provided with this package to an AS/400 running OS/400 V3R1, you must install PTF MF10808 on the AS/400 first. If this PTF is not installed, then errors with sense codes of 080F 6051 and 1008 201D will occur.

Enabling Client/Server Applications

Chapter 10. Where to Find More Information

This chapter discusses getting help when you are installing, configuring, or using Personal Communications.

Online Help

The help facility describes how to install, configure, and use Personal Communications. Online help is very extensive and includes information about every aspect of configuring and using Personal Communications.

Use help to obtain information about:

- Menu choices
- Operation procedures
- Operations in windows
- Meanings of the terms displayed in windows
- Causes of errors and the corresponding actions to take
- Mouse-based operations
- Operation without a mouse
- Detailed explanations of specific terms
- Further technical information about Personal Communications
- Detailed explanations of operator information area (OIA) messages

How to Use Online Help

To display online help, select choices from the Help menu.

You can use Personal Communications online help just as you use the online help for Windows 95 or Windows NT.

Messages

Online messages are displayed during Personal Communications sessions but a message does not always mean an error occurred. For example, a message might tell you that an operation is in progress or has been completed. A message can also prompt you to wait for the completion of an operation.

Press F1 to display help for the messages that appear.

Page Fault Messages

If a message does appear in a pop-up window, you can copy its contents into the Windows 95 or Windows NT clipboard. To do this:

1. Click **Details Command** on the pop-up window.
2. Mark the text that you want to copy.
3. Right click the marked text and then click **Copy**.
4. Start an editor, such as Notepad, and click **Paste** from the Edit menu.
5. Save the file in case an IBM Service Representative needs this information to diagnose your problem.

© Copyright IBM Corp. 1989, 1997

OIA Messages

Personal Communications displays messages in the operator information area (OIA) or in a pop-up window. Messages from Personal Communications are displayed in the message window; messages from the host system are displayed in the OIA of the session window.

The bottom line of the session window is the OIA. The OIA indicator indicates the status of Personal Communications as well as information about the workstation, host system, and attachment method.

All of the OIA indicators, reminders, and messages are described in the online help. To view this information:

1. Select **Index** from the Help menu.
2. Select **The operator information area messages**.

Tip

When the index window appears, select the **Index** button, and then select **Find**. Type in the number of the message. Click on **Search**.

Personal Communications Library

The Personal Communications library includes the following online publications:

IBM eNetwork Personal Communications Quick Beginnings, GC31-8476
IBM eNetwork Personal Communications Access Feature, SC31-8526
IBM eNetwork Personal Communications Reference, SC31-8477
IBM eNetwork Personal Communications Emulator Programming, SC31-8478
IBM eNetwork Personal Communications Client/Server Communications Programming, SC31-8479
IBM eNetwork Personal Communications System Management Programming, SC31-8380
IBM eNetwork Personal Communications Emulator Class Library, SC31-8527
IBM eNetwork CM Mouse Support User's Guide and Reference

Related Publications

For information about local area networks (LANs), refer to the following publications:

IBM Local Area Network Technical Reference
AS/400 Communications: Local Area Network (LAN) Guide Version 2

For more information about NetWare, refer to the publications for the following products:

For the client	*NetWare Client for Windows*
For NetWare for SAA	*NetWare for SAA*

Contacting IBM

This section lists several ways you can reach IBM, depending on the nature of your problem or concern. To allow us to serve you better, we will ask you to be prepared to provide us with some information. If you have a technical problem, please take the time to review and carry out the actions suggested here. Use your local support personnel before contacting IBM. Only persons with in-depth knowledge of the problem should contact IBM; therefore, support personnel should act as the interface with IBM.

If you determine that you need to contact IBM, the following section describes the services IBM provides.

Statement of Service

IBM provides defect support through Program Services. A defect related problem means the program does not conform to specifications and could be either a code or documentation error.

For information on how you can access Program Services or other fee-based support services:

1. In the U.S.A., contact the Project Office at 800-799-7765. Hours of operation are from 8:00 a.m. to 5:00 p.m. Eastern Time, Monday through Friday, except national holidays.
2. In Hong Kong, please contact the Customer Relationship Center (CRC) at 2825-7878. Hours of operation are from 9:00 a.m. to 5:00 p.m., except national holidays.
3. In Korea, please contact Single Point Of Entry (SPOE) at 02-781-7114 or 080-023-8080 for information on how you can access Program Service or Other Support Services in Korea. Hours of operation are from 9:00 a.m. to 6:00 p.m. on weekdays, except national holidays.
4. In Taiwan, please contact the Customer Relationship Center (CRC) at (02) 776-7878. Hours of operation are from 9:00 a.m. to 5:00 p.m., except national holidays.
5. Other countries are in the following table:

Country	Phone Code	Number, with (0) used inside the country
France	33	(0)2.38.55.77.77
Germany	49	(0)180-55090
Italy	39	167-017001
UK	44	(0)1705-492949 and ask for express services
Austria	43	(0)222/21145-2500
Belgium	32	(0)2-2252525
Ireland	353	(0)1 850205205
Netherlands	31	(0)20-5135151
Sweden	46	(0)20 96 75 83
Norway	47	66 99 90 90
Denmark	45	4593 4545
Finland	358	9800 42680
Spain	34	901-100 400
Turkey	90	212-2800900
Portugal	351	1 7915977
Israel	972	(0)3-6978555
Greece	30	(0)1-6801700
South Africa	27	(0)800 130130
Switzerland	41	155 1225

The terms and conditions for the technical support described in this guide are subject to change. For additional information on fee service offering please contact your IBM Direct organization or your nearest IBM Representative.

Reporting Defects

Customers can report code-related problems to IBM electronically, via fax, or through U.S. mail. IBM will respond in the same media as the customer inquiry. IBM will respond to customer inquiries within a maximum of 2 business days of electronic or facsimile receipt, and 7 days of mail receipt advising of the problem disposition.

In China, call the S/W Service Hotline at 010-6261-6677.

In Taiwan, call the S/W Service Hotline at (02) 776-7654 or 080-21-1213. Hours of operation are from 9:00 Created by ActiveSystems 01/03/97 Entity not defined. 5:00, except national holidays.

In Hong Kong, call the Australia WSC Hotline at 61-2-354-4002 if you have a SupportLine contract with IBM.

If the problem reported is not known to be a code-related problem, the customer will be informed that IBM will continue to work on it for a fee if the customer does not have a support contract. If the problem is determined to be caused by an error in IBM code, the fee will be waived.

Submitting Defects by Fax

To fax a potential defect to IBM:

In the U.S.A.,

1. Call 1-800-992-4777 to have a fax submission form sent to your fax machine. Follow the prompts to select the correct options. Fill out the form and fully describe your problem.
2. Fax the completed defect report to:

   800-426-8602

   Be sure to include your fax number for a response.

In Taiwan,

1. Fully describe your problem and fax to (02) 773-7314.
2. Be sure to include your fax number for a response.

In Korea,

1. Fully describe your problem and fax to (02) 781-7774.
2. Be sure to include your fax number for a response.

Submitting Defects by Mail

To mail a potential defect to IBM:

1. Fully describe your problem
2. Mail the completed defect report to:

   IBM CORPORATION
   PERSONAL SYSTEMS SUPPORT FAMILY
   11400 BURNET ROAD
   INTERNAL ZIP 2901
   AUSTIN, TEXAS 78728

Be sure to include your return address for a response.

Submitting Defects Electronically

IBM will accept potential defect reports submitted using the Internet, TalkLink or Compuserve. Included here for convenience are the steps to access electronic customer support:

TalkLink via IBMLink: The Personal Communications AS/400 and 3270 products are supported via the OS2BBS1 section of the IBMLink service.

1. Access the OS2BBS1 section via an IBMLink Main Menu.
2. Select **IBMSupt - IBM PS Defect Submission, CSD Order, &; Info Library**.
3. Select **PROBrpt - Submit an ETR (Defect Submission)**.
4. Select **OTHERProb - PS Supportline - Other IBM Software Products Def. Menu**.
5. Select **J-p - PS Supportline - IBM software products J to P Menu**.
6. Then select the Personal Communications product in the displayed list (there are various versions and titles displayed, please choose the one that best describes your product).

A temporary reporting number will be displayed at the bottom of the screen. Record this number until a permanent Problem Management Record (PMR) number is assigned to your reported defect.

Also available in the U.S. is access to the PCOMM CFORUM on TalkLink. If you do not have access to TalkLink, call 1-800-547-1283 (U.S.A. only). TalkLink administration personnel will send you a registration package that lists the available features and the current subscription rates. You should receive the registration package approximately two weeks after calling. Return the necessary documents and TalkLink administration personnel will send you a welcome package that contains the software you need to access TalkLink.

IBM Service on the Internet: The IBM Personal Software Services home page provides access to general product information, service information, and hints and tips. It also provides download services for software fixes and device drivers.

To view this home page or to submit a software defect report for a Personal Systems Support Family product, use an internet browser and go to URL:

http://ps.software.ibm.com

This will bring you to the IBM Personal Software Services page. Then choose "Technical Assistance."

From the Technical Assistance page, you can submit a problem (U.S. customers only) or obtain a customer number and a special personal identification number (PIN). Note that you must have a customer number and PIN before you can submit a problem.

CompuServe: To report a suspected defect in a product in the Personal Systems Support Family via CompuServe:

1. From the CompuServe** Main Menu, type **GO OS2SUPPORT**
2. In the Library called "IBM Files" (library 23), download the file PROBLM.TXT.
3. Fill in the appropriate sections of the form contained in PROBLM.TXT

Note

Some sections are specific to OS/2 and OS/2 related problems. Please complete the form as completely as possible for your specific operating environment.

4. Using CompuServe E-mail, send this completed form to the address: 76711,611

IBM will reply via CompuServe mail to each PROBLM.TXT defect report received. The reply will include a Problem Management Record (PMR) number. This number is used by IBM to track each unique problem reported by each customer. The IBM reply will also include any other information necessary for the situation.

Other Ways to Contact IBM

Information about Personal Communications is available from the following sources:

The PCOMM CFORUM

This forum is monitored by Personal Communications users and, when possible, by Personal Communications developers.

- In the U.S., access the PCOMM CFORUM on the OS2BBS bulletin board via TalkLink.

  If you do not have access to TalkLink/OS2BBS, call 1-800-547-1283 (U.S.A. only). TalkLink administration personnel will send you a registration package that lists the available features and the current subscription rates. You should receive the registration package approximately 2 weeks after calling. Return the necessary documents and TalkLink administration personnel will send you a welcome package that contains the software you need to access TalkLink/OS2BBS.

  IBMLink customers can register via SMARTLink's new TalkLink selection.

- In Canada, access the PCOMM CFORUM via IBMLink.
- In Australia, to access the PCOMM CFORUM:

  1. Type NEWMENU to access the pilot menus.
  2. Select **FORUMS**.

- In Europe, the Middle East, and Africa, use DIAL-IBM to access the PCOMM CFORUM via the CONFER application on OS2BBS.

  If you do not have access to OS2BBS, contact your country DIAL-IBM help desk.

Internet

IBM Networking Software has a home page on the Internet with general product information and service information. Using an Internet browser such as IBM Web Explorer, go to the following URL:
http://www.raleigh.ibm.com/pcf/pcfprod.html

IBM Personal Communications Online Customer Support

Access this electronic bulletin board to view information APARs and to obtain APAR fixes. To request that an APAR fix be made available, either leave a message for SYSOP on the bulletin board or call 1-800-992-4777 (U.S.A. only).

To access the electronic bulletin board:

1. Dial 919-543-8200 (country code: 001 from outside the U.S.A.).
2. Use protocol N81.
3. Follow the instructions. Entering your first name and last name registers you the first time you use the facility.

The IBM Software Solutions Center

From the U.S.A., call 800-992-4777. From Canada, call 800-465-2222. Outside call IBM International Information at 800-426-1774.

The OS/2 Developer's Assistance Program

Call 407-982-6408 (country code: 001 from outside the U.S.A.).

Finding More Information

Appendixes

© Copyright IBM Corp. 1989, 1997

Appendix A. Directories and System File Modifications

This appendix describes the directories that are created and how the system files are modified during installation.

Directories Created by the Installation Program

The program creates five subdirectories in the root of the main Personal Communications directory: **INCLUDE, LIB, PDFPDT**, **PRIVATE**, and **SAMPLES**. With the exception of the **PRIVATE** subdirectory, the subdirectories might contain files only when you have selected to install them.

PRIVATE Subdirectory

This is almost empty when you first install Personal Communications (unless you have migrated from a previous version), but if you create and save configurations, the following types of files are stored here:

Personal files in the PRIVATE subdirectory:

Workstation (session) profiles (*.WS)
SNA configuration files (*.ACG)
Batch files (to start multiple sessions) (*.BCH)
Keyboard files (*.KMP)
Pop-up keypad files (*.PMP)
Mouse files (*.MMP)
Macro files (*.MAC)
Automatic-dial facility files (*.ADU)
File-transfer translation files (*.XLT)
User profile (*.UPR) (PC400 only)
Tool bar files (*.BAR)
Trace log files (*.TLG)
Message log files (*.MLG)

SAMPLES Subdirectory

This has several subdirectories, each containing the executable and source files for a sample program. Header and LIB files are stored in the Personal Communications\samples directory.

These programs are designed to illustrate the use of a programming interface:

DDXFER Shows how the EHLLAPI interface can be used to create a drag-and-drop application.

HLLSMP Shows how the EHLLAPI interface can be used by an application on your workstation to request keystrokes and to log on to a VM system.

LISTFILE Illustrates how the dynamic data exchange (DDE) interface can make use of the **LOAD** button to transfer files from a VM host system (PC/3270 only).

PCSMAIN Illustrates the use of the PCSAPI interface.

SPL2FILE A DDE sample program that converts the AS/400 spooled file to the workstation file.

© Copyright IBM Corp. 1989, 1997

SRPSMP Shows how the SRPI SEND_REQUEST interface verb can be used by a requester application on your workstation to invoke a server on the host.

VBDDE Illustrates the use of the DDE interface with Microsoft Visual Basic**.

VBHLLAPI Illustrates the use of the EHLLAPI interface with Microsoft Visual Basic.

VBPCSAPI Illustrates the use of the PCSAPI interface with Microsoft Visual Basic.

WINAPING Illustrates the use of CPI-C API programming.

PDFPDT Subdirectory

This directory contains PDF/PDT files used by Personal Communications print function in PDT mode. Refer to “Using Printer Definition Table (PDT) Files” on page 53 for more information about using PDF/PDT files.

ECL Subdirectory

The ECL subdirectory contains samples for using the Emulator Class Library for Visual Basic (VB), Lotus Script, and C++.

Appendix B. Attachment Considerations

This appendix describes factors you should consider when configuring Personal Communications for the attachment types listed here.

COAX Attachment

This section describes factors you should consider when configuring Personal Communications with a coaxial attachment.

Note

The APPC and CPI-C APIs, provided with Personal Communications, do not support coaxial connections.

Avoiding Machine Check 207

Patch the microcode of the 3174 control unit. The following table shows the relationship between 3174 control unit microcode levels and patch IDs:

Microcode Level	Patch ID
S0503	PCA53D1
S0504	PCA53D2
A0503	PCA53D3
A0504	PCA53D4
B0200	PCA53D5
B0401	PCA53D6
B0402	PCA53D8
C0101	PCA53D7

In addition, if you have a 3174 with Configuration Support B or higher, you can set the following parameters:

3174 customization Q126 digit 2=1 to change the COAX timeout from 50 to 100 microseconds.

3174 customization Q125 digit 4=1 to set command chaining off.

Polling Feature

Some workstations disable interrupt-level 2 (IRQ 9) and reserve it for their own use. IRQ 9, a redirected IRQ 2, is the only interrupt level that can be used by the IBM 3278/79 emulation adapter. Sometimes, when you try to use PC/3270 for coaxial attachment with this type machine, you cannot connect to a host system.

If this happens, add the **Poll=Y** parameter to the [CSDFT] or h[CNDFT] section of your workstation profile (*.WS) as follows:

SNA/DFT attachment

```
[CSDFT]
Poll=Y          <-- add
```

Non SNA/DFT attachment

© Copyright IBM Corp. 1989, 1997

```
[CNDFT]
Poll=Y          <-- add
```

Sometimes PC/3270 cannot receive an interrupt from a 3270 credit card adapter (PCMCIA). The default value of the Poll parameter is Y for a 3270 credit card attachment.

Functions Not Available with DFT Attachment

When your workstation is configured to use a DFT attachment, the following functions and capabilities of the IBM 3174 or 3274 Control Units are not supported:

Programmed symbols on attached workstations
Attachment to port 0 on attached workstations
Database operations
3270 Diagnostic Reset Dump
Patch facility

PCMCIA Configuration for a DFT Attachment

Using PCMCIA

If your workstation has an IBM 3270 Emulation Credit Card Adapter (3270 CCA) installed, Personal Communications uses it in the same way as the IBM 3278/79 Emulation or 3270 Connection Adapter.

You cannot use multiple 3270 CCAs; nor can you use a 3270 CCA at the same time as a 3278/79 Emulation or 3270 Connection Adapter. Before you can use a PCMCIA card, you must register it in Windows NT before you start Personal Communications. Refer to Appendix C, “Adapter Setup Hints and Tips” on page 115 for more information.

Coax Adapters and ROM Shadowing

Personal Communications maps the shared RAM of the 3270 connection adapter on the PC. The default values for the adapters as follows.

Adapter #0 CE000h - CFFFFh

Adapter #1 D0000h - D1FFFh

Adapter #2 D2000h - D3FFFh

Adapter #3 D4000h - D5FFFh

PCs that support ROM shadowing in BIOS may use these areas for ROM shadowing by default (IBM PC350 P100 for example). Check the ROM shadowing settings before installing an adapter and disable the range for the adapter you are going to install.

LAN via IEEE 802.2 Attachment

Following is a description of preinstallation considerations for installing Personal Communications for use on a LAN. For more detailed information, refer to the *IBM Local Area Network Technical Reference*.

PIU Size

This value is negotiated between your workstation and the host system, unless XID=No is defined on the PU, or the Adjacent CP name has been changed to Host - XID0 in SNA Node Configuration. If this value is not negotiated, the Maximum PIU Size must match the MAXDATA value defined on the host system.

Receive Window Count

This value is negotiated between your workstation and the host system, unless XID=No is defined on the PU, or the Adjacent CP name has been changed to Host - XID0 in SNA Node Configuration. If this value is not negotiated, the Receive Window Count must match the MAXOUT value defined on the host system.

Using a PCMCIA Token-Ring or Ethernet Card

PC/3270 supports the IBM Token-Ring and Ethernet credit card adapters in the same way as it does the full-size adapters.

TCP/IP Connection

This section provides information, considerations, and restrictions for Personal Communications TCP/IP connections.

TCP/IP Protocol Driver

You must set up your Windows environment for the TCP/IP network. To verify that the TCP/IP protocol is installed on your workstation, double-click **Network** in your Control Panel and see if TCP/IP appears in the list of network components. Double-click **TCP/IP** to specify your IP address and other TCP/IP properties.

Restrictions

The following functions are not available with TN3270 or TN5250 connectivity.

SDDLU (self-defining dependent LUs).
SNA session-level compression and decompression.
The maximum packet size must be less than 8000 bytes for file transfer (SBCS only).
Data Transfer (PC400).
5250 Printer Session.
Network Drive (Shared Folders)

Screen Size

The following four screen sizes are supported for TN3270:

24 x 80
32 x 80
43 x 80
27 x 132

The following two screen sizes are supported for TN5250:

24 x 80
27 x 132

Screen size 48X80, 62X160, and 24X132 are supported if your system supports the TN3270E protocol.

Terminal Type to Be Negotiated With TN3270

The terminal type to be negotiated is set to IBM-3278-2-E, IBM-3278-3-E, IBM-3278-4-E, or IBM3278-5-E according to the screen size that is specified on the Customize Communication - 3270 Host panel. If you need to specify IBM-3279-2-E or IBM-3279-3-E (for graphics), add the following line to the [Telnet3270] section in the workstation profile (.WS):

```
TerminalType=3279
```

Considerations for Telnet3270, TN3287, and TN3270E Connection

TN3287 (defined in RFC 1646) and TN3270E (defined in RFC 1647) were tested with following Telnet servers:

Communications Server for Windows NT

Communications Server for OS/2

TN3287 Brixton PU2.1 V3.0

- SNA Client Access for AIX Version1 Release 2
- IBM Communications Server for OS/2 Warp

TN3270E Brixton PU2.1 V3.0

- SNA Client Access for AIX Version1 Release 2
- IBM Communications Server for OS/2 Warp

Microsoft SNA Server

When PC/3270 V4.1 sessions were connected to the Brixton PU2.1 V3.0 server with TN3270E protocol, some limitations were noted. These limitations appear to be caused by defects or limitations in the server itself and are listed below:

1. The server does not support FMH1. If you would like to run a host application that uses FMH1, use a TN3270E server that supports it.
2. The server sometimes hangs after returning a negative response to a host application when it receives outbound data containing an error from the application.
3. Avoid pressing the ENTER key multiple times quickly. Doing this may disconnect the session.
4. If you customize a printer session on the emulator using an LU name defined as a display on the server, you will see this error message prompted by the server:

   ```
   PCSTLNET008 - The requested LU name is already associated with
   another Telnet session.
   ```

   You will also get the same error from the server if an emulator printer LU is associated with an LU defined as a display on the server. In these cases no connection is established.
5. If the server sends an UNBIND during an SSCP-LU session, PC/3270 disconnects the session and then reconnects the session.

SDLC MPA Attachment

This section describes factors you should consider when configuring Personal Communications with an SDLC attachment.

Line Speed

For the SDLC attachment, a line speed up to 28.8 Kbps is supported. However, actual line speed will vary depending on the carrier speed the modem supports.

V.25bis Autodial

Personal Communications only supports the bit-oriented protocol for V.25bis call control messages. Modems must support an ASCII-coded character set consisting of 7-bit coded ASCII characters with odd parity.

Personal Communications supports the following adapters:

Multiprotocol (MPA) interface compatible adapters, for example:

- IBM Multiprotocol Communications Adapter (73G7099)
- IBM Multiprotocol Adapter/A (645114 or later)
- IBM SDLC/Asynch Communications Adapter (ASCA) (42H4332)

IBM SDLC PCMCIA adapter (Japanese only)

IBM SDLC PCMCIA modem (Japanese only)

Performance Considerations

If you use multiple sessions in a high-speed and high-load configuration with an SDLC attachment, the connection to the host might fail. In this case, set the host's timeout value to be greater than that of Personal Communications.

To change the host timeout value, modify the following NCP parameters:

REPLYTO
The maximum duration in seconds that the host waits for a reply from the terminal. The default is 1 second.

RETRIES=(m,t,n)
The number of recovery attempts for errors occurring during transmission over the link. Repetitive retries are called a retry sequence. The maximum number of retries is specified as m, which can be from 0 to 128. NCP pause (the time between the retry sequences) is specified as *t* and can be from 1 to 255 seconds. The maximum number of retry sequences is specified by *n* and can be from 1 to 127. For example:

```
REPLYTO=1,  RETRIES=(3,4,5)
(( 1(seconds) x 3(times) + 4(seconds)) x 5(times)
= 35 (seconds)
```

Note

In this example, the host will wait 35 seconds for the terminal to reply.

For more details, ask your system personnel.

To change the Personal Communications timeout value, type a new value in the Inactivity timer field on the Performance page of the Connections property sheet in SNA Node Configuration.

The value is in seconds and can be from 40 to 160. The default is 80.

PIU Size: This value is negotiated between your workstation and the host system, unless XID=No is defined on the PU, or the Adjacent CP name has been changed to Host - XID0 in SNA Node Configuration. If this value is not negotiated, the Maximum PIU Size must match the MAXDATA value defined on the host system.

Receive Window Count: This value is negotiated between your workstation and the host system, unless XID=No is defined on the PU, or the Adjacent CP name has been changed to Host - XID0 in SNA Node Configuration. If this value is not negotiated, the Receive Window Count must match the MAXOUT value defined on the host system.

Preventing Conflicts with MPA Adapters

The multiprotocol adapters use system resources that, in some cases, cannot be shared. Therefore, you must make sure there are no conflicts with the following resources:

DMA level
I/O addresses (MPA0 uses X'380'–X'38F' and MPA1 uses X'3A0'–X'3AF')
IRQ level (ISA bus only)

The IBM Multiprotocol interface adapters use the following system resources:

The AT-bus SDLC adapters require the use of IRQ3 and DMA channel 1 and only the MPA0 communication port is supported.

The MPA for ISA can be supported using mode 4 (IRQ3 and DMA1 channel 1) or mode A (IRQ4 and DMA channel 1). IRQ level send/receive of 3 or 4 is supported. The ASCA can be supported using mode 4 (IDQ3 or IRQ5 or IRQ4 or IRQ7 and DMA channel 1) or mode A (IRQ4 or IRQ7 and DMA channel 1. IRQ level send/receive or 3, 4, 5, or 7 is supported. The interrupt level setting on the configuration panel in Personal Communications must match the value on the adapter card.

Note

When the MPA is configured for mode 4, the device will not be allowed to use the other IRQ even though only one interrupt is claimed.

Personal Communications supports the MPA0 or MPA1 communication ports. Some sound cards use an I/O address within the range X'380'–X'38F'. MPA1 should be used to avoid a conflict.

The MPA/A for a microchannel-bus workstation uses IRQ3, and the DMA level is configurable. Both the MPA0 and MPA1 communication ports can be active at the same time and the interrupt is claimed as sharable.

Advantis (IIN) Attachment

Advantis (IIN) is supported using 8-bit no parity; SNA session-level compression and decompression is not supported.

Line Speed

Line speeds up to 115.2 kbps are supported. The maximum usable line speed depends on the speed of the processor or communication port, however. If communication stops or becomes exceedingly slow, reduce the line speed.

IBM Global Network Connection Attachment

Note

This attachment type is not available in Japan.

IBM Global Network Connection supports only a single communication port.

Line Speed

IBM Global Network Connection supports up to 115,200 bps as the line speed. However, the maximum usable line speed depends on the speed of the processor or communication port. If communication stops or becomes exceedingly slow, reduce the line speed.

Functions Not Available with the IBM Global Network Connection

You cannot use the following functions:

Import/Export
Host graphics
Host print
Server-Requester Programming Interface (SRPI)
Concurrent multiple file transfers

Home3270 Attachment

Because Home3270 supports only a single COM port, only one session is available for use at a time.

Setting the Screen Colors in a Home3270 Session

Because protocol converters translate the 3270 (EBCDIC) data stream into an ASCII data stream, the original information about the 3270 fields is lost, and all the field attributes of the 3270 screen are treated as extended attributes. Because of this, you must select the **Extended Color** category in order to change the colors of characters on the screen. Changing base colors will have no effect.

For example, if you want to change the color of characters that appear in green on a black background, select **Extended Color - Green**, then click or drag-and-drop

the color you want for the characters (and for the background if you wish). Do not change the appropriate **Base Color** because the change will have no effect.

Line Speed

Line speeds up to 115,200 bps are supported. However, characters might be lost on high-speed lines, depending on the processor speed. If communication stops or becomes exceedingly slow, reduce the line speed.

Unsupported Character Sequences

The following character sequence is valid for the Home3270 attachment. However, it performs no function.

ESC P 1 (Block cursor command)
ESC P 0 (Underline cursor command)
DLE DC2 (Printer start command)
DLE DC4 (Printer end command)

Conditions for Communication Check 50x

Home3270 requires both Data Set Ready (DSR) and Carrier Detect (CD) to determine the state of the attachment with the host system. If DSR is not recognized, communication check 501 appears in the operator information area. When DSR is recognized, if CD is not recognized, communication check 504 appears in the operator information area.

When you select ROLMphone** with DCM in the Home3270 configuration, communication check 504 does not appear.

Home3270 and OIA message COMM 504

If you run Home3270 sessions at a speed of 28.8 kbps or higher and the session disconnects with a COMM504 in the OIA, try lowering the port speed to equal the line speed of the Protocol Converter you are connecting to.

Note

DBCS is not available with this attachment.

Restrictions

The following functions are not available with this attachment:

Host graphics
Host print
Server Requester Programming Interface

3270 Attachment via the AS/400 System

This section provides information, considerations, and restrictions for PC/3270 connections through an AS/400 system.

AS/400 System Setup

PC/3270 can connect to a host computer via one or more AS/400 systems by using the passthrough function (usable with OS/400 Version 2.2.0 or later).

To use this function, set the following communication configuration descriptions in the AS/400 system to **on** (Vary On):

Line description
Controller description
Printer description

Error Messages from the AS/400 System

When this system is connected to an S/390 host system via the AS/400 system, the following message might appear on the screen.

AS/400 CPI5xxx

The message might appear for the following reasons:

Line error between the AS/400 system and the host system

Communication configuration description error in the AS/400 system

The communication configuration description in the AS/400 system is set off (Vary Off).

When this message appears, detailed error information is saved in the AS/400 system operator message queue. Refer to the error message that corresponds to the number displayed on the screen and then correct the cause of the error.

IBM PC720 Modem Initialization (Japan Only)

In the Japanese version of Personal Communications, if you use an IBM PC720 and connect it via a dial connection, the error message “COMDIA15 Unable to initialize modem” may appear at startup. To correct this condition, increase the value of **Retries** in **Initialization** to more than 1 by using the **Modem Information** panel.

Practical Peripherals 14400MT Modem Considerations

The Practical Peripherals 14400MT modem does not always work properly when receiving incoming connections. If it appears that the modem is not answering an incoming call, then do the following:

1. Using the Node Operations panel, stop the Device associated with the modem.
2. Turn off power to the modem and then back on.
3. Using the Node Operations panel, start the Device associated with the modem.

Twinax Attachments

Personal Communications supports the following IBM adapters:

- IBM Enhanced 5250 Display Station Emulation Adapter
- IBM AT-Bus Communication Adapter (Asia Pacific)
- IBM 5250 Emulation PCMCIA Adapter
- IBM 5250 PCMCIA Adapter (Asia Pacific)
- IBM System36/38 Workstation Emulation Adapter /A
- IBM 5250 Emulation Adapter /A
- IBM 5250 Emulation PCI Adapter
- IBM 5250 Express ISA Adapter
- IBM 5250 Express PC Card
- IBM 5250 Express PCI adapter
- Other Twinax Adapters (OEM)

IBM SDLC PCMCIA Adapter and Modem (Japan Only)

For Windows 95: The support uses the Configuration Manager for Plug and Play support, which will automatically configure IRQ number, I/O ports and memory addresses as required. IBMSDLC.INF (installed in the Personal Communications installation directory) describes the SDLC PCMCIA cards to the operating system. When you insert the PCMCIA card, Windows 95 prompts you for the adapter drivers. You must specify the Personal Communications installation directory and select **OK**. To verify that the adapter is functioning properly, select the appropriate PCMCIA adapter under **Other Device** on the System Property page's Device Manager property sheet.

For Windows NT: Plug and Play is not supported. During installation the registry is updated, using default parameters. When the configuration is started and an incoming or outbound connection is enabled, the device attempts to load, using the stored parameters from the registry. If a card is found and a conflict is detected, the registry is updated with values that don't conflict and you are notified to restart the system.

Note

The system must be restarted for these values to take affect.

No more than one SDLC PCMCIA card can be used concurrently. Because a common driver supports both SDLC PCMCIA and MPA interface cards, an MPA cannot be used concurrently with SDLC PCMCIA.

IBM SDLC PCMCIA Adapter

This card supports:

- Leased and switched connections
- Speeds up to 19.2 Kbps
- Switched and Constant Request To Send (RTS)
- NRZ and NRZI encoding schemes

The IRQ number on the device page's adapter property sheet is ignored.

IBM SDLC PCMCIA Modem

This card supports:

- Switched V.26bis connections only
- Speeds up to 2400 baud
- Switched RTS only

The configured value on the constant RTS and IRQ level send/receive device page's adapter property sheet are ignored.

Note

The receive window count in the SDLC-MPA device page's performance property sheet and the SDLC-MPA connections page's performance property sheet must be set to 1.

SDLC Attachment and IBM 7852 Modems

To use the SDLC attachment with an IBM 7852-013 modem, make sure that NRZI encoding is not selected. If you experience problems look on the IBM PC Company bulletin board for flash updates for this modem.

WAC Attachments

This section describes factors you should consider when configuring Personal Communications to communicate via a Wide Area Connector (WAC) adapter.

EIB Support

All available Electrical Interface Boards (EIBs) are supported for the WAC adapter.

Supported Adapters

The IBM WAC adapters for bus types ISA and MCA are supported. **Note:** at this time, the new IBM PCI bus WAC adapter is NOT supported by Personal Communications.

Potential Configuration Issues

When configuring both ports (upper and lower) on a single WAC adapter, you must create two logical devices, using the configuration utility. Be careful to configure the same Shared Ram Address for both devices, using the same adapter number. If you do not do this, the Shared Ram Address for the first device activated will be used for the second device.

For ISA systems, the adapter number is obtained from the interpretation of the on-board DIP switch settings. Switches 1-3 determine the Interrupt level, and switches 4-7 (read in reverse order) determine the adapter number. Please consult the adapter installation publication for additional information. Adapter numbers 0 and 1 are logically the same. This is also true for adapter numbers 8 and 9.

On some IBM ValuePoint systems, intermittent problems can occur. If you are using one of these systems and are having problems, ensure that the adapter's DIP switch settings are such that Interrupt Level 9 is being used.

If you intend to use the WAC adapter in a system and you also plan on using Hayes AutoSync function, then you might experience problems with your async connection. To find appropriate Shared Memory values, you should use the adapter diagnostic disk provided with the adapter.

For MCA systems, the adapter number is the slot number in which the adapter physically resides. You can easily obtain this number via the MCA Configuration utility that was provided with your system. For IBM systems, you can determine this number by looking at the back of the system unit and providing the number displayed for the selected slot.

System Resources

The Wide Area Connector adapter utilizes the following system resources per each adapter installed:

32 bytes of IO addresses (differs depending upon the adapter number used on ISA; see help on the configuration panel for additional information, or via MCA adapter config.)

Interrupt level (1 level can be used on MCA if all adapters share the same, ISA adapters must have unique interrupt numbers.)

16KB of shared memory

For ISA adapters, you should consult your WAC installation publication for information concerning the IRQ used and the adapter number configured, both of which are configured via the adapter's DIP switches.

3174 Peer Communications Support (Lan over Coax)

The Lan over Coax function provides peer-to-peer communication for workstations connected to an IBM 3174 Control Unit via an IBM 3270 communication adapter. It provides support for any NDIS protocol stack capable of utilizing the IEEE 802.5 (Token Ring) frame format such as IEEE 802.2 (SNA), Netbios, TCP/IP, or LLC2.

Installation

To install the 3174 Peer Communications Adapter Support, from the Network Control Panel, choose to install a new adapter, and, when prompted, select the **Have Disk** option, and direct the installation program to the XLNCOAX subdirectory in the Personal Communications installation directory.

The .INF file will install the new adapter support and bind the adapter to all valid protocol stacks. To utilize the new adapter, after installing and rebooting, configure Personal Communications to utilize a LAN adapter, and enter the adapter number that corresponds to the 3174 Peer Communications adapter number found under the LLC Protocol for this adapter. The 3174 Peer Communications RPQ is also required on the 3174.

Configuration

Configure by using the Network Control Panel's **Properties** button for the selected adapter.

Options

Network Address Overrides the burned in adapter address.

Queued Transmits Number of queued transmit elements to support.

Slot Number Required for MCA bus systems, not applicable to others; indicates the adapter to use in a specific MCA slot.

On Micro Channel workstations, you can use up to 4 type-B 3270 Connection Adapters (but only 1 type A). When you configure Personal Communications, you must specify the physical slot in which each adapter is installed.

System Resources

On ISA Bus systems, the following system resources are used:

Interrupt Level 2

IO address 0x2d0 through 0x2df

Shared memory address 0xce000

These resources are not changeable. On MCA systems, these resources are configured via the MCA adapter configuration, with the exception for the Interrupt number, which is Interrupt 2.

Multiple Adapter Coexistence

If you use type-B adapters, you can use one or more for DFT connections concurrently with 3174 Peer Communications. If you want to do this, the Peer Communications adapter(s) must be in higher-numbered slots than the DFT adapter(s) because DFT connections will, by design, use the first adapter(s) they find, searching from slot 1.

Twinaxial Console

You can configure Personal Communications to act as the console for an AS/400. If you want to use full-function 5250 emulation, you must not use the console attachment; you must use Twinaxial Data Link Control (APPC).

Restrictions

You cannot use the Setup API functions of the File menu

You can only use Copy on the Edit functions.

You cannot use the file transfer function.

You cannot set the session type to Printer. (AS/400)

You cannot use multiple console sessions.

You cannot transfer the Enhanced Non-programmable Terminal User Interface (ENPTUI) from the host system.

Asynchronous Console

For the asynchronous console attachment, you must have a 2609 or 2612 adapter for the Multiple Function I/O Processor (MFIOP) on the AS/400 system. This connection also requires a special cable. The part numbers for the cables are: 46G0450 (6m) and 46G0479 (2.5m).

Note

The AS/400 Advanced Portable Model P02 does not support the asynchronous console attachment.

Appendix C. Adapter Setup Hints and Tips

This appendix describes how to configure adapters, including PCMCIA cards.

Using Coax (3270) Adapters

Personal Communications supports IBM AT-bus, Micro Channel (MCA), and PCMCIA coax adapters; the configuration of each is described in the following sections.

3278/79 Emulation Adapter (AT-Bus)

This adapter has a fixed I/O-port address and interrupt level (IRQ), but you have to set the memory address, which you can do only through the Personal Communications configuration.

The buffer address must be set. The default is CE000. If you happen to know that this address is already being used by another device, you should change it, but, when you first try to connect, Personal Communications will check the registry to find an available address anyway.

IBM 3270 Connection Adapter (Micro Channel)

Micro Channel adapters need the same types of resource as AT-bus but configuration is much easier because the resources are all set by the workstation's hardware configuration and Personal Communications is able to read them.

Configure Personal Communications in the normal way. The default buffer address will be the one set in the system configuration. You should not change it.

PCMCIA Adapter (PC Card)

If the card is in your workstation when you install Personal Communications, it will be configured automatically. If you insert the card after installation, you must reboot your workstation so that the card can be detected.

Configure Personal Communications in the normal way; you will notice that the PCMCIA radio button is active and that you do not have to configure the buffer address.

The first time that you insert the 3270 Emulation Credit Card Adapter into a PCMCIA slot, Windows 95 will prompt you for the location of the card's driver. The driver (IBM3270.INF) is located in the directory where Personal Communications is installed.

Note

Removing the card while you have an active connection will have unpredictable results.

© Copyright IBM Corp. 1989, 1997

3270 ISA-Bus and MCA Adapters and ROM Shadowing

These adapters use 8kb of workstation memory; the default values for the memory addresses are as follows:

Adapter #0 CE000h - CFFFFh
Adapter #1 D0000h - D1FFFh
Adapter #2 D2000h - D3FFFh
Adapter #3 D4000h - D5FFFh

Some types of workstation may use these areas, by default, for ROM shadowing in BIOS (the IBM PC350 for example). You should check the ROM-shadowing settings before installing an adapter, and disable the range that will be used by the adapter that you are going to install.

OEM Adapters

Personal Communications has an open API that enables vendors and Other Equipment Manufacturers (OEMs) to provide adapter cards that allow for additional connectivity options, for example, additional X.25, ISDN, SDLC. or twinax support. After installing the OEM adapter, you can begin to configure it in the usual manner described in “Creating a Configuration” on page 37. However, at some point in the configuration process you may need to provide information required by the manufacturer of the OEM adapter card.

Using Twinax (5250) Adapters

Personal Communications supports AT-bus, Micro Channel, PCI, and PCMCIA twinax adapters; the configuration of each is described in the following sections. All the IBM adapters are supported; OEM adapters are supported if their manufacturer has created a device driver that is compatible with the IBM driver.

AT-Bus Adapters

The adapters have switches that allow you to set the I/O port address. You also have to set the memory address and the interrupt level (IRQ) but you can do this only through the program that is going to use the adapter.

When you configure Personal Communications, the interrupt level, I/O-port address, and memory address must be set. In most cases, you can use the defaults; if you change a setting, make sure that the value does not conflict with that for another device.

Micro Channel (MCA) and PCI Adapters

Micro Channel adapters and PCI adapters need the same types of resource as AT-bus but configuration is much easier because the resources are all set by the workstation’s hardware configuration, and Personal Communications is able to read them.

Configure Personal Communications in the normal way; you will see that the three adapter configuration fields are grayed out. No configuration is required.

These adapters may not be able to register themselves with Windows NT, so you may not see them in Device Manager.

IBM 5250 PCI Emulator Adapter

If you experience problems getting a host connection with the 5250 Emulation PCI Adapter and you have an IBM PC, upgrading your PC's BIOS might solve the problem. You can find the date of your system's BIOS by going into your system setup when you boot your PC. Then you can look on the Internet to see if there is a later version for your PC. The IBM File Library WEB site that has the latest BIOS upgrade files is located at: www.pc.ibm.com/listfiles.html

From here you can search for your specific IBM PC. If there is a flash BIOS upgrade date later than that on your PC, download the file to your PC and follow the instructions that come with the file. For non-IBM PCs, contact the manufacturer of your PC for BIOS upgrade information.

Hints and Tips

Appendix D. AS/400 Configuration Examples

To connect PC400 to an AS/400 system, you need to specify configuration information in the workstation profile that accurately corresponds to the information specified in the AS/400 system (referred to as the *device description*).

For example, the LAN attachment via IEEE 802.2 in the following figure shows how the configuration information specified in the PC400 workstation profile corresponds to the configuration information in the AS/400 system.

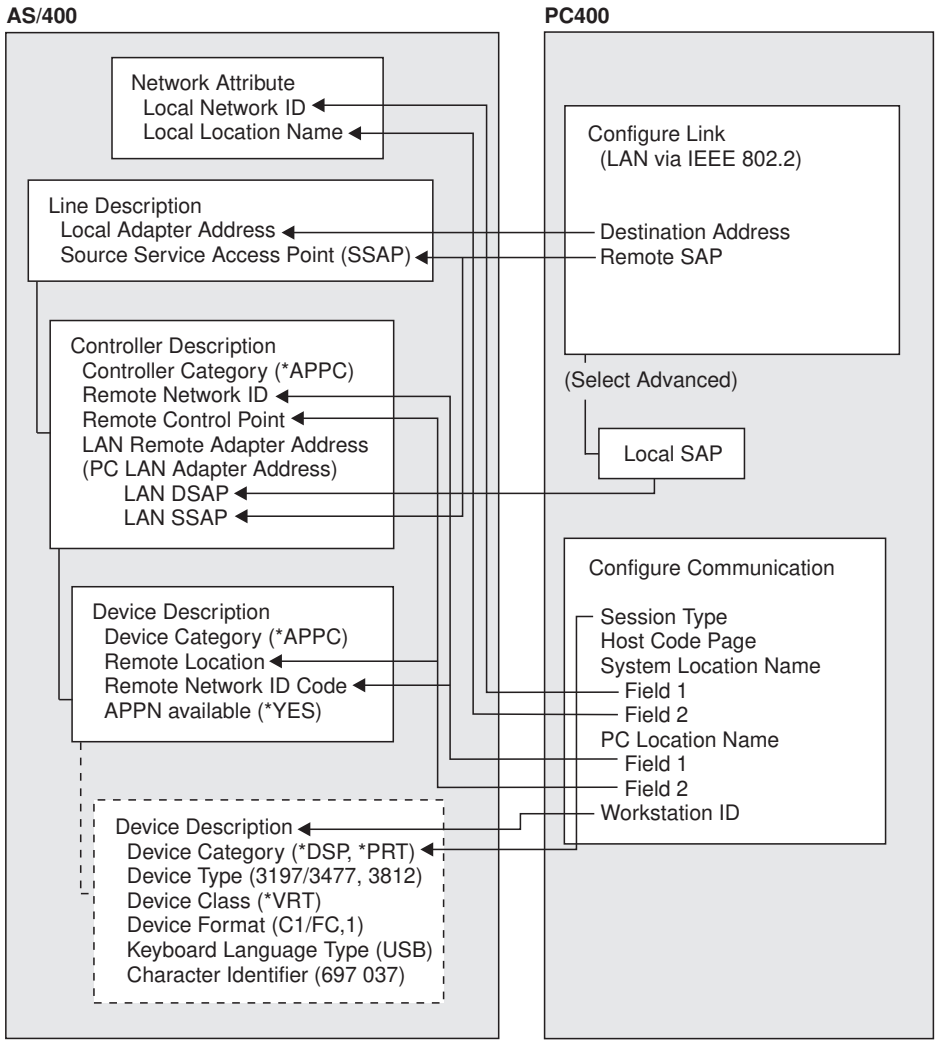

AS/400 Device Description

To configure 5250 display or printer sessions, the following values must be set in the AS/400 device description:

© Copyright IBM Corp. 1989, 1997

AS/400 Device Description

AS/400 Device Description	Display Session		Printer Session
	24 x 80	27 x 132	
Device category	*DSP	*DSP	*PRT
Device class	*VRT	*VRT	*VRT
Device type	3197	3477	3812
Device model	C1	FC	1
Keyboard language type	USB+	USB+	-
Character identify code	697 037+	697 037+	-
+ For SBCS, depends on the host code page selection.			

The following table applies to DBCS only.

AS/400 Device Description	Display Session			Printer Session
	Host Code Page 931	Host Code Page 939		
Device category	*DSP	*DSP	*PRT	
Device class	*VRT	*VRT	*VRT	
Device type	5555	5555	5555	
C01	C01	C01		
JUB	JPB	-		
Character identify code	332 290	101 037	-	
DBCS device feature	2424J0	2424J0	2424J0	2424J0

5250 Sessions through One Link

If you want all your 5250 sessions to connect through one link to an AS/400 system, use the same **PC Location Name** and the same **Link Parameters** for all the sessions.

For example, you can configure two display sessions and one printer session connected to an AS/400 system using *APPN.PC5250* as the **Location Name**.

```
Session A    : Session Type          : Display
(Display)      System Location Name  : APPN.S7801234
                 PC Location Name    : APPN.PC5250
                 Workstation ID      : (not specified)

Session B    : Session Type          : Display
(Display)      System Location Name  : APPN.S7801234
                 PC Location Name    : APPN.PC5250
                 Workstation ID      : (not specified)

Session C    : Session Type          : Printer
(Printer)      System Location Name  : APPN.S7801234
                 PC Location Name    : APPN.PC5250
                 Workstation ID      : PCLOCALP1
```

In this example, the AS/400 network attributes are:

```
Local network ID : APPN
Local  location    : S7801234
```

Tip

Enter **DSPNETA** from a 5250 session to display AS/400 network attributes.

AS/400 System Mode Description

PC400 initially uses mode description **QPCSUPP** on the AS/400 system. If the PC Support/400 program or Client Access/400 is installed on the AS/400 system, QPCSUPP need not be created. If mode description QPCSUPP does not exist on the AS/400 system, create the mode description:

1. Enter the following command on the command line of the main menu of the AS/400 system:

   CRTMODD

   The Creating Mode Description panel appears.

```
                    Creating Mode Description (CRTMODD)

Type the selected items, and push the Enter key.

Mode Description................          Name
Maximum Session................. 8        _          1-512
Maximum number of interaction.... 8      _          1-512
Number of Local Control Sessions. 4      _          0-512
Number of Pre-joined Sessions.... 0      _          0-512
Inbound Pacing Value............. 7      _          0-63
Outbound Pacing Value............ 7      _          0-63
Maximum Length of Request Unit... *CALC____          241-16384, *CALC
Text Description ................ *BLANK      _____

                                                                    End
F3=Exit     F4=Prompt          F5=Reshow     F10=Add parameter     F12= Cancel
F13=How to use this panel                    F24=More key
```

2. Type the necessary values in each field, according to the following table.

Field Name	Input Value
Mode description	**QPCSUPP**
Maximum session	**64**
Maximum number of interactions	**64**
Number of local control sessions	**0**
Number of pre-joined sessions	**0**
Inbound pacing value	**7**
Outbound pacing value	**7**
Maximum length of request unit	***CALC**
Text description	This field is optional

3. After you type all the values, press the Enter key.

   This completes the creation of the mode description QPCSUPP.

AS/400 Device Description for Twinaxial Attachments (APPC) Example

If you want to use a twinaxial (TDLC) attachment, the AS/400 system requires that you specify a device description. When the automatic device configuration indicator (QAUTOCFG) is set to ON in the AS/400 system, the device description is created automatically. When the indicator is set to OFF, create the device description, as follows:

1. Enter the following command on the command line of the AS/400 system main menu:

   CRTDEVDSP

   The Creating Device Description (Display) panel appears.

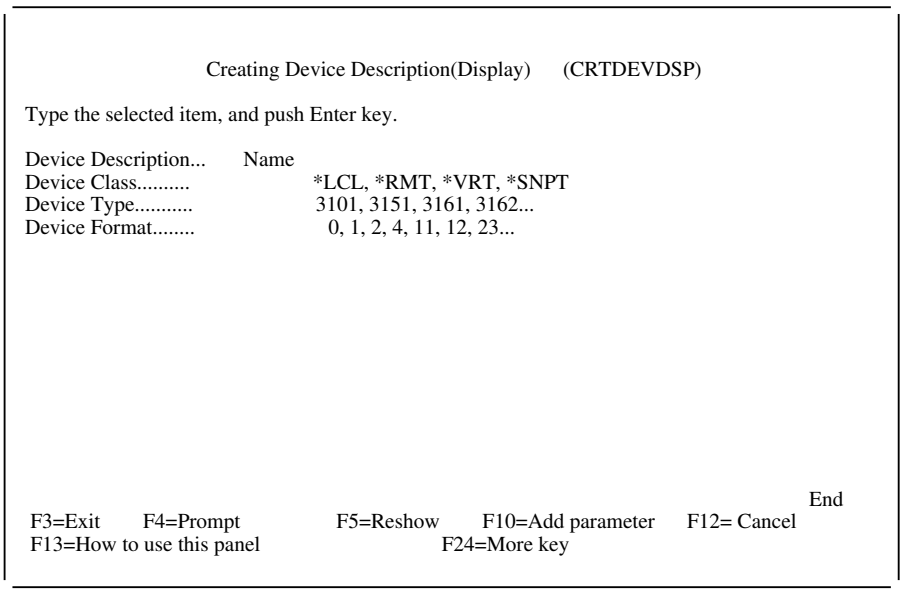

2. Type the values in each field, according to the following table.

Field Name	Input Value
Device description	This is an optional field
Device class	***LCL**
Device type	**5150**
Device format	**2**

3. After you type all values, press the Enter key.

   The following screen appears:

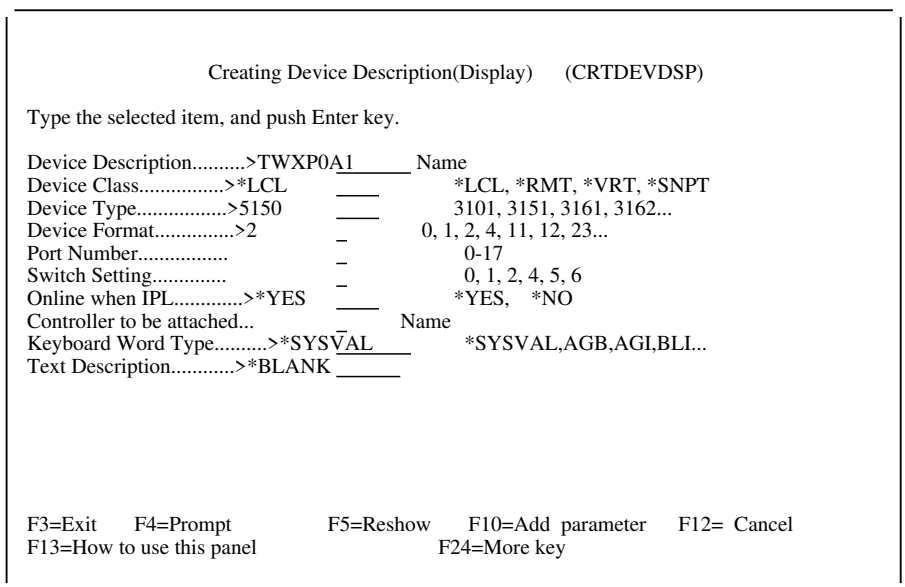

4. Type the values for each field, according to the following table.

Field Name	Input Value
Port number	Number of the port to be attached
Switch setting	Device address
Controller to be attached	Descriptive name of the controller to be attached
Keyboard word type	**USB**[1]

[1] Depends on the host code page selection.

5. After you enter all the values, press the Enter key.

   This completes the creation of the device description for the twinaxial attachment.

AS/400 Device Description for Asynchronous Attachment Example

If you want to use an asynchronous dial attachment, the AS/400 system requires that you specify configuration parameters for the controller/line/devices to be used.

The following sample is a typical configuration on the AS/400 system for an asynchronous dialed connection through an ASCII Workstation Controller.

1. Enter the following command on the command line of the AS/400 system main menu:

WRKCFGSTS *CTL CTL03

where *CTL03* is the name of your controller.

The Work with Configuration Status panel appears.

```
                        Work with Configuration Status

Position to . . . . . _____________   Starting characters

Type options, press Enter
   1=Vary on 2=Vary off 5=Work with job 8=Work with description
   9-Display mode status ...

 Opt    Description          Status            ----------Job----------
8_      CTL03                  ACTIVE
__        ADLCTST              VARY ON PENDING
__        ASYNC                VARY ON PENDING
__        ASYNCD               VARY ON PENDING
__        EZASYNC              VARY ON PENDING
__        ASYNCP0              VARY ON PENDING
__        ASYNRTR               ACTIVE

                                                                    BOTTOM
Parameters or command
 ===>

F3=Exit F4=Prompt F12=Cancel F23=More options F24=More keys
```

2. Enter **8** in the **Opt** field to work with the controller description for CTL03.

   The Work with Controller Descriptions panel appears.

```
                      Work with Controller Descriptions

Position to . . . . . _____________   Starting characters

Type options, press Enter
     2=Change 3=Copy 4=Delete 5=Display 6=Print 7=Rename
     8=Work with status 9=Retrieve source 12=Print device addresses

Opt     Controller      Type   Text
2_      CTL03           6141   CREATED BY AUTO-CONFIGURATION




                                                                    BOTTOM
Parameters or command
 ===>
F3=Exit F4=Prompt F5=Refresh F6=Create F9=Retrieve F12=Cancel
F14=Work with status
```

3. Enter **2** in the **Opt** field to change the controller description for CTL03.

   The Change Controller Description panel appears.

```
                    Change Ctl Desc (local WS) (CHGCTLLWS)

Controller Description . . . . . : CTL03
Option . . . . . . . . . . . . . : *BASIC
Category of controller . . . . . : *LWS

Controller type    . . . . . . . . . : 6141
Controller model . . . . . . . . . . : 1
Resource name    . . . . . . . . . . : CTL03
TDLC line    . . . . . . . . . . . . : QTDL429000
Online at IPL    . . . . . . . . . . : *YES
Auto-configuration controller    . . : *YES
Text . . . . . . . . . . . . . . . : CREATED BY AUTO-CONFIGURATION
Device wait timer    . . . . . . . . : 10



Press Enter to continue.
  ===>
                                                                      BOTTOM
 F3=Exit  F4=Prompt  F5=Refresh  F12=Cancel  F13=How to use this display
F24=More keys
```

4. Type the values in each field, according to the following table.

Field Name	Input Value
Controller description	CTL03
Resource name	CTL03
Online at IPL	*YES
Device wait timer	10
Auto-configuration controller	*YES
Text description	This field is optional

The Work with Controller Descriptions panel appears.

```
                        Work with Controller Descriptions

Position to . . . . . _____________    Starting characters

Type options, press Enter
     2=Change 3=Copy 4=Delete 5=Display 6=Print 7=Rename
     8=Work with status 9=Retrieve source 12=Print device addresses

Opt     Controller       Type   Text
  8_     CTL03              6141   Created by auto-configuration









                                                                      BOTTOM
Parameters or command
  ===>
F3=Exit F4=Prompt F5=Refresh F6=Create F9=Retrieve F12=Cancel
F14=Work with status
```

5. Enter **8** in the **Opt** field to work with the configuration status.

   The Work with Configuration Status panel appears.

```
                    Work with Configuration Status

Position to . . . . . _______________    Starting characters

Type options, press Enter
    1=Vary on 2=Vary off 5=Work with job 8=Work with description
    9-Display mode status ...

 Opt     Description              Status              -------------Job--------------
__       CTL03                      ACTIVE
__          ADLCTST                  VARY ON PENDING
__          ASYNCPERTH                VARY ON PENDING
__          ASYNCD                   VARY ON PENDING
__          EZASYNC                  VARY ON PENDING
__          ASYNCP0                  VARY ON PENDING
8_          ASYNRTR                   ACTIVE

                                                                                BOTTOM
Parameters or command
  ===>

F3=Exit F4=Prompt F12=Cancel F23=More options F24=More keys
```

6. Enter **8** in the **Opt** field next to ASYNRTR to work with the display device description.

   The Work with Device Descriptions panel appears.

```
                    Work with Device Descriptions

Position to . . . . . _______________    Starting characters

Type options, press Enter
      2=Change 3=Copy 4=Delete 5=Display 6=Print 7=Rename
      8=Work with status 9=Retrieve source

Opt     Controller       Type    Text
 2_     ASYNRTR            5150   FOR  PC400




                                                                                BOTTOM
Parameters or command
  ===>
F3=Exit F4=Prompt F5=Refresh F6=Create F9=Retrieve F12=Cancel
F14=Work with status
```

7. Enter **2** in the **Opt** field to change the device description.

   The Change Device Description panel appears.

```
                    Change Device Desc (Display) (CHGDEVDSP)

Type choices, press Enter.

Device description . . . . . > ASYNRTR        Name
Port number  . . . . . .     4                0-17, *SAME
Switch setting . . . . . .   0                0-6, *SAME
Online at IPL  . . . . . .   *YES             *SAME, *YES, *NO
Keyboard language type . . . . . USI          *SAME, *SYSVAL, *NONE, AGB...

Character identifier:
   Graphic character set  . . . . .  *KBDTYPE      1-32767, *KBDTYPE, *SYSVAL...
   Code page  . . . . . .                         1-32767
Allow blinking cursor  . . . . . *YES            *SAME, *YES, *NO
Print device . . . . . .    *SYSVAL              Name, *SAME, *SYSVAL
Output queue . . . . . .    *DEV                 Name, *SAME, *DEV
   Library  . . . . . .                          Name, *LIBL, *CURLIB
Printer file . . . . . .    QSYSPRT              Name, *SAME
   Library  . . . . . .     *LIBL                Name, *LIBL, *CURLIB
                                                                        More...
Press Enter to continue.
 ===>
 F3=Exit  F4=Prompt  F5=Refresh  F10=Additional parameters  F12=Cancel
F13=How to use this display       F24=More keys
```

This completes the creation of the controller and display device descriptions for an asynchronous dial attachment.

AS/400 VT Asynchronous Attachment Example

The following sample is a typical configuration on the AS/400 system for a VT asynchronous dialed connection through an ASCII Workstation Controller. For more details on AS/400 for VT asynchronous attachments, see the *AS/400 ASCII Workstation Reference (SA41-3130-00).*

1. Enter the following command on the command line of the AS/400 system main menu:

   CRTDEVDSP

   The Create Device Description panel appears, in a first and second screen, as shown for the configuration of a VT100 device below. When filling in the panel, make sure that the name of the attached controller (arbitrarily shown as CTL05 here) matches the name of the twinaxial controller configured on your AS/400.

```
                    Create Device Desc (Display) (CRTDEVDSP)

Type choices, press Enter.

Device description . . . . . > VT100             Name
Device class . . . . . > *LCL                *LCL, *RMT, *VRT, *SNPT
Device type  . . . . . > V100                3101, 3151, 3161, 3162...
Device model . . . . . > *ASCII              0, 1, 2, 4, 5, 12, 23 ...
Emulated twinaxial device  . . . > *TYPE           3196A2, 3197D2, *TYPE
Port number  . . . . . > 1                   0-17
Emulating ASCII device . . . . . > *NO             *NO, *YES
Physical attachment  . . . . . > *MODEM          *DIRECT, *PTT, *MODEM...
Online at IPL  . . . . . > *YES              *YES, *NO
Attached controller  . . . . . > CTL05           Name
Keyboard language type . . . . . > USB             *SYSVAL, AGB, AGI, ALI...
Inactivity timer . . . . . > *NOMAX          1-30, *ATTACH, *NOMAX...
Line speed . . . . . > 19200             *TYPE, *CALC, 150, 300...
Word length  . . . . . > 8                   *TYPE, *CALC, 7, 8
Type of parity . . . . . > *NONE             *TYPE, *CALC, *EVEN, *ODD...
Stop bits  . . . . . > 2                 *TYPE, 1, 2
                                                                        More...
 F3=Exit    F4=Prompt    F5=Refresh    F10=Additional parameters    F12=Cancel
F13=How to use this display            F24=More keys
```

```
                    Create Device Desc (Display) (CRTDEVDSP)

Type choices, press Enter.

Text 'description' . . . . . > 'dec vt100 device description test'


                              Additional Parameters
Character identifier:
   Graphic character set  . . . . > *KBDTYPE        1-32767, *SYSVAL, *KBDTYPE
   Code page  . . . . . .                         1-32767
Print device . . . . . > *SYSVAL           Name, *SYSVAL
Output queue . . . . . > *DEV              Name, *DEV
   Library  . . . . . .                    Name, *LIBL, *CURLIB
Printer file . . . . . > QSYSPRT           Name
   Library  . . . . . >     *LIBL          Name, *LIBL, *CURLIB



                                                                        Bottom
 F3=Exit    F4=Prompt    F5=Refresh    F10=Additional parameters    F12=Cancel
F13=How to use this display            F24=More keys
```

2. Here is a similar configuration for a VT220.

   Use the same command, CRTDEVDSP, on the command line of the AS/400 system main menu. Again, the same kind of panels appear. You must make sure that the name of the attached controller matches the name of the twinaxial controller configured on your AS/400.

```
                    Create Device Desc (Display) (CRTDEVDSP)

Type choices, press Enter.

Device description . . . . . .     VT220              Name
Device class . . . . . . . . . . > *LCL               *LCL, *RMT, *VRT, *SNPT
Device type  . . . . . . . . . . > V220               3101, 3151, 3161, 3162...
Device model . . . . . . . . . . > *ASCII             0, 1, 2, 4, 5, 12, 23
Emulated twinaxial device  . . . > *TYPE                3196A2, 3197D2, *TYPE
Port number  . . . . . . . . . . > 2                  0-17
Emulating ASCII device . . . . . > *NO                  *NO, *YES
Physical attachment  . . . . . . > *MODEM             *DIRECT, *PTT, *MODEM...
Online at IPL  . . . . . . . . . > *YES               *YES, *NO
Attached controller  . . . . . . > CTL05              Name
Keyboard language type . . . . . > USB                  *SYSVAL, AGB, AGI, ALI...
Inactivity timer . . . . . . . . > *NOMAX             1-30, *ATTACH, *NOMAX...
Line speed . . . . . . . . . . . > 19200              *TYPE, *CALC, 150, 300...
Word length  . . . . . . . . . . > 8                  *TYPE, *CALC, 7, 8
Type of parity . . . . . . . . . > *NONE              *TYPE, *CALC, *EVEN, *ODD...
Stop bits  . . . . . . . . . . . > 1                  *TYPE, 1, 2
                                                                              More...
F3=Exit    F4=Prompt    F5=Refresh    F10=Additional parameters    F12=Cancel
F13=How to use this display              F24=More keys
```

```
                    Create Device Desc (Display) (CRTDEVDSP)

Type choices, press Enter.

Text 'description' . . . . . . . > 'dec vt220 device description test'


                                Additional Parameters

Character identifier:
    Graphic character set  . . . . > *KBDTYPE          1-32767, *SYSVAL, *KBDTYPE
    Code page  . . . . . . . . . .                     1-32767
Print device . . . . . . . . . . > *SYSVAL             Name, *SYSVAL
Output queue . . . . . . . . . . > *DEV                Name, *DEV
    Library  . . . . . . . . . . .                     Name, *LIBL, *CURLIB
Printer file . . . . . . . . . . > QSYSPRT             Name
    Library  . . . . . . . . . . .>     *LIBL          Name, *LIBL, *CURLIB



                                                                              Bottom
 F3=Exit    F4=Prompt    F5=Refresh    F10=Additional parameters    F12=Cancel
F13=How to use this display              F24=More keys
```

AS/400 Configuration for SDLC Example

The following examples refer to SDLC and Hayes AutoSync:

Network Attributes

To display the network attributes for the AS/400 to which you are connecting, enter the command **dspneta** on the AS/400 Main Menu.

```
MAIN                                    AS/400 Main Menu
                                                          System:     RALYAS4B
Select one of the following:

      1. User tasks
      2. Office tasks
      3. General system tasks
      4. Files, libraries, and folders
      5.  Programming
      6.  Communications
      7. Define or change the system
      8. Problem handling
      9. Display a menu
     10. Information Assistant options
     11. Client Access tasks

     90. Sign off

Selection or command
===> dspneta

F3=Exit    F4=Prompt    F9=Retrieve    F12=Cancel    F13=Information  Assistant
F23=Set initial menu
```

Press Enter.

The Display Network Attributes screen is displayed.

```
                              Display Network Attributes

                                                          System:     RALYAS4B
Current system name    . . . . . . . . . . . . . :     RALYAS4B
   Pending system name    . . . . . . . . . . . . :
Local network ID . . . . . . . . . . . . . . . . :     USIBMRA
Local control point name . . . . . . . . . . . . :     RALYAS4B
Default local location . . . . . . . . . . . . . :     RALYAS4B
Default mode . . . . . . . . . . . . . . . . . . :     BLANK
APPN node type . . . . . . . . . . . . . . . . . :     *NETNODE
Data compression . . . . . . . . . . . . . . . . :     *NONE
Intermediate data compression    . . . . . . . . . :     *NONE
Maximum number of intermediate sessions    . . . . :     200
Route addition resistance    . . . . . . . . . . . :     128
Server network ID/control point name . . . . . . :     *LCLNETID     *ANY




                                                                          More...
Press Enter to continue.

F3=Exit     F12=Cancel
```

The network attributes include the AS/400 Network ID and CP name.

SDLC Leased Configuration

Several descriptions must be created on the AS/400; examples are given below.

Creating a SDLC Line Description

To create an SDLC leased line description, enter the command **crtlinsdlc** on the AS/400 Main Menu.

```
MAIN                                AS/400 Main Menu
                                                        System:     RALYAS4B
Select one of the following:

      1. User tasks
      2. Office tasks
      3. General system tasks
      4. Files, libraries, and folders
      5. Programming
      6. Communications
      7. Define or change the system
      8. Problem handling
      9. Display a menu
     10. Information Assistant options
     11. Client Access tasks

     90. Sign off

Selection or command
===> crtlinsdlc

 F3=Exit    F4=Prompt    F9=Retrieve    F12=Cancel    F13=Information  Assistant
F23=Set initial menu
```

Press F4 (Prompt).

The Create LIne Description panel is displayed. Enter the values for each parameter on the panel.

```
                        Create Line Desc (SDLC) (CRTLINSDLC)

Type choices, press Enter.

Line description . . . . . > PCOMMSDLCL       Name
Resource names . . . . . > LIN021             Name
                  + for more values
Online at IPL  . . . . . .     *YES           *YES, *NO
Data link role . . . . . .     *NEG           *NEG, *PRI, *SEC
Physical interface . . . . . .     *RS232V24      *RS232V24, *V35, *X21, ...
Connection type  . . . . . .     *NONSWTPP      *NONSWTPP, *SWTPP, *MP, *SHM
Switched network backup  . . . .     *NO            *NO, *YES
Exchange identifier  . . . . . .     *SYSGEN        05600000-056FFFFF, *SYSGEN
NRZI data encoding . . . . . .     *YES           *YES, *NO
Line speed . . . . . .     9600           600, 1200, 2400, 4800...
Modem type supported . . . . . .     *NORMAL        *NORMAL, *V54, *IBMWRAP...
Maximum frame size . . . . . .     521            265, 521, 1033, 2057
Duplex . . . . . .     *HALF          *HALF, *FULL
Inactivity timer . . . . . .     300            *NOMAX, 150-4200 (0.1 sec)
Poll response delay  . . . . . .     0              0-2048 (0.0001 seconds)
                                                                        More...
 F3=Exit    F4=Prompt    F5=Refresh    F12=Cancel    F13=How to use this display
F24=More keys
```

```
                    Create Line Desc (SDLC) (CRTLINSDLC)

Type choices, press Enter.

Nonproductive receive timer   . .    320              160-4200 (0.1 seconds)
Idle timer . . . . . . . . . .    30              5-300 (0.1 seconds)
Connect poll timer . . . . . .    30              2-300 (0.1 seconds)
Poll cycle pause . . . . . . .    0               0-2048 (0.0001 seconds)
Frame retry   . . . . . . . . .   7               0-64
Text 'description' . . . . . .    PCOMM SDLC leased line


                         Additional  Parameters

Attached nonswitched ctls   . . .                    Name
                    + for more values
Modem data rate select . . . . .    *FULL            *FULL, *HALF
Error threshold level   . . . . .   *OFF             *OFF, *MIN, *MED, *MAX
Modulus   . . . . . . . . . . .   8                 8, 128
Maximum outstanding frames . . .    7                 1-28
                                                                          More...
 F3=Exit    F4=Prompt    F5=Refresh    F12=Cancel    F13=How  to  use  this  display
F24=More keys
```

Press Enter to save the line description pcommsdlcl.

SDLC Controller Description

To create the SDLC controller description for the line PCOMMSDLCL, enter **crtctlappc** on the AS/400 Main Menu.

```
MAIN                                AS/400 Main Menu
                                                                System:     RALYAS4B
Select one of the following:

      1. User tasks
      2. Office tasks
      3. General system tasks
      4. Files, libraries, and folders
     5.  Programming
     6.  Communications
      7. Define or change the system
      8. Problem handling
      9. Display a menu
     10. Information Assistant options
     11. Client Access tasks

     90. Sign off

Selection or command
===> crtctlappc

F3=Exit    F4=Prompt    F9=Retrieve    F12=Cancel    F13=Information  Assistant
F23=Set initial menu
```

Press F4 (Prompt). The Create Controller Description panel is displayed. Enter values for each parameter on the following two panels.

```
                        Create Ctl Desc (APPC) (CRTCTLAPPC)

Type choices, press Enter.

Controller description . . . . . > PCOMMSDLCL       Name
Link type  . . . . . . . . . . . > *SDLC            *ANYNW, *FAX, *FR, *IDLC...
Online at IPL  . . . . . .  *YES                    *YES, *NO
Switched connection  . . . . . .  *NO              *NO, *YES
Switched network backup  . . . .  *NO              *NO, *YES
APPN-capable . . . . . .  *YES                      *YES, *NO
Attached nonswitched line  . . . > PCOMMSDLCL       Name
Maximum frame size . . . . . .  *LINKTYPE          265-16393, 256, 265, 512...
Remote network identifier  . . . > USIBMRA          Name, *NETATR, *NONE, *ANY
Remote control point . . . . . > PCOMMCP            Name, *ANY
Exchange identifier  . . . . . .                    00000000-FFFFFFFF
Data link role . . . . . .  *NEG                    *NEG, *PRI, *SEC
Station address  . . . . . .  C1                    00-FE
APPN CP session support  . . . .  *NO              *YES, *NO
APPN node type . . . . . .  *LENNODE               *ENDNODE, *LENNODE...
APPN transmission group number  1                   1-20, *CALC
                                                                        More...
 F3=Exit  F4=Prompt  F5=Refresh  F12=Cancel  F13=How to use this display
F24=More keys
```

```
                        Create Ctl Desc (APPC) (CRTCTLAPPC)

Type choices, press Enter.

Autocreate device  . . . . . .  *ALL                *ALL, *NONE
Autodelete device  . . . . . .  1440               1-10000, *NO
User-defined 1 . . . . . .  *LIND                  0-255, *LIND
User-defined 2 . . . . . .  *LIND                  0-255, *LIND
User-defined 3 . . . . . .  *LIND                  0-255, *LIND
Text 'description' . . . . . .  PCOMM SDLC Leased


                              Additional  Parameters

Attached devices . . . . . .                       Name
                  + for more values
Character code . . . . . .  *EBCDIC               *EBCDIC, *ASCII
SSCP identifier  . . . . . .                       000000000001-FFFFFFFFFFFF
IDLC window size . . . . . .  *LIND                1-31, *LIND
IDLC frame retry . . . . . .  *LIND                0-100, *LIND
                                                                        More...
 F3=Exit  F4=Prompt  F5=Refresh  F12=Cancel  F13=How to use this display
F24=More keys
```

Press Enter.

The APPC Device Description will create itself automatically.

SDLC Switched Configuration

The following examples contain information about the SDLC switched configuration on the AS/400.

SDLC Line Description

To create an SDLC switched line definition on the AS/400, enter the command **crtlinsdlc** on the AS/400 Main Menu.

```
MAIN                                AS/400 Main Menu
                                                        System:     RALYAS4B
Select one of the following:

      1. User tasks
      2. Office tasks
      3. General system tasks
      4. Files, libraries, and folders
      5. Programming
      6. Communications
      7. Define or change the system
      8. Problem handling
      9. Display a menu
     10. Information Assistant options
     11. Client Access tasks

     90. Sign off

Selection or command
===> crtlinsdlc

 F3=Exit    F4=Prompt    F9=Retrieve    F12=Cancel    F13=Information  Assistant
F23=Set initial menu
```

Press F4 (Prompt).

The Create Ctl Description panel is displayed. Enter values for each parameter on the panel.

```
                        Create Line Desc (SDLC) (CRTLINSDLC)

Type choices, press Enter.

Line description . . . . . > PCOMSDLCSW       Name
Resource names . . . . . > LIN051             Name
                    + for more values
Online at IPL  . . . . . .     *YES           *YES, *NO
Data link role . . . . . > *PRI               *NEG, *PRI, *SEC
Physical interface . . . . .     *RS232V24     *RS232V24, *V35, *X21, ...
Connection type  . . . . . > *SWTPP           *NONSWTPP, *SWTPP, *MP, *SHM
Vary on wait . . . . . .     *NOWAIT          *NOWAIT, 15-180 (1 second)
Autocall unit  . . . . . .     *NO            *NO, *YES
Exchange identifier  . . . . .     *SYSGEN    05600000-056FFFFF, *SYSGEN
NRZI data encoding . . . . . .     *YES       *YES, *NO
Line speed . . . . . .     9600               600, 1200, 2400, 4800...
Modem type supported . . . . . .     *NORMAL  *NORMAL, *V54, *IBMWRAP...
Switched connection type . . . .     *BOTH    *BOTH, *ANS, *DIAL
Autoanswer . . . . . .     *YES               *YES, *NO
Autodial . . . . . .     *NO                 *NO, *YES
                                                                      More...
 F3=Exit    F4=Prompt    F5=Refresh    F12=Cancel    F13=How to use this display
F24=More keys
```

```
                        Create Line Desc (SDLC) (CRTLINSDLC)

Type choices, press Enter.

Calling number . . . . . .     *NONE
Connect poll retry . . . . . .     7                    0-64
Maximum frame size . . . . . .     521                  265, 521, 1033, 2057
Duplex . . . . . .     *HALF                *HALF, *FULL
Nonproductive receive timer  . .     320                160-4200 (0.1 seconds)
Idle timer . . . . . .     30                 5-300 (0.1 seconds)
Connect poll timer . . . . . .     30                 2-300 (0.1 seconds)
Poll cycle pause . . . . . .     0                  0-2048 (0.0001 seconds)
Frame retry  . . . . . .     7                  0-64
Data Set Ready drop timer  . . .     6                  3-60 (seconds)
Autoanswer type  . . . . . .     *DTR               *DTR, *CDSTL
Remote answer timer  . . . . . .     60                 30, 35, 40, 45 (seconds)...
Text 'description' . . . . . .     PCOMM SDLC switched line



                                                                          More...
 F3=Exit    F4=Prompt    F5=Refresh    F12=Cancel    F13=How to use this display
F24=More keys
```

Press Enter to save the description pcomsdlcsw.

SDLC Controller Description

To create the controller description for the switched SDLC line, enter **crtctlappc** on the AS/400 Main Menu.

```
MAIN                                AS/400 Main Menu
                                                          System:     RALYAS4B
Select one of the following:

      1. User tasks
      2. Office tasks
      3. General system tasks
      4. Files, libraries, and folders
      5. Programming
      6. Communications
      7. Define or change the system
      8. Problem handling
      9. Display a menu
     10. Information Assistant options
     11. Client Access tasks

     90. Sign off

Selection or command
===> crtctlappc

F3=Exit    F4=Prompt    F9=Retrieve    F12=Cancel    F13=Information Assistant
F23=Set initial menu
```

Press F4 (Prompt).

The Create Controller Description panel is displayed. Enter values for each parameter on the panel.

```
                        Create Ctl Desc (APPC) (CRTCTLAPPC)

Type choices, press Enter.

Controller description . . . . . > PCOMSDLCSW       Name
Link type  . . . . . . . . . . . > *SDLC            *ANYNW, *FAX, *FR, *IDLC...
Online at IPL  . . . . . .  *YES                    *YES, *NO
Switched connection  . . . . . > *YES               *NO, *YES
Short hold mode  . . . . . .  *NO                   *NO, *YES
APPN-capable . . . . . .  *YES                      *YES, *NO
Switched line list . . . . . > PCOMSDLCSW       Name
                  + for more values
Maximum frame size . . . . . .  *LINKTYPE          265-16393, 256, 265, 512...
Remote network identifier  . . .  *NETATR          Name, *NETATR, *NONE, *ANY
Remote control point . . . . . > JO                 Name, *ANY
Exchange identifier  . . . . . > 00000000           00000000-FFFFFFFF
Initial connection . . . . . > *ANS                 *DIAL, *ANS
Connection number  . . . . . > 123
Data link role . . . . . > *SEC                     *NEG, *PRI, *SEC
Station address  . . . . . .  01                    00-FE
                                                                          More...
 F3=Exit    F4=Prompt    F5=Refresh    F12=Cancel    F13=How to use this display
F24=More keys
```

```
                        Create Ctl Desc (APPC) (CRTCTLAPPC)

Type choices, press Enter.

APPN CP session support  . . . .  *NO               *YES, *NO
APPN node type . . . . . .  *LENNODE          *ENDNODE, *LENNODE...
APPN transmission group number  1                   1-20, *CALC
APPN minimum switched status . .  *VRYONPND       *VRYONPND, *VRYON
Autocreate device  . . . . . .  *ALL               *ALL, *NONE
Autodelete device  . . . . . .  1440               1-10000, *NO
User-defined 1 . . . . . .  *LIND                 0-255, *LIND
User-defined 2 . . . . . .  *LIND                 0-255, *LIND
User-defined 3 . . . . . .  *LIND                 0-255, *LIND
Text 'description' . . . . . .  PCOM SDLC switched line


                              Additional  Parameters

Attached devices . . . . . .                      Name
                  + for more values
                                                                          More...
 F3=Exit    F4=Prompt    F5=Refresh    F12=Cancel    F13=How to use this display
F24=More keys
```

Press Enter to save the controller description pcomsdlcsw.

The APPC Device Description will create itself automatically once Personal Communications attaches to the AS/400 using the line and controller descriptions that were just created.

LAN Configuration Example

This example assumes that a line description (token-ring or Ethernet) is already in place. This is a shared configuration object—all connections on that adapter will use the same line description. In the configuration example shown, the line description name is TRN2619.

LAN Controller Description

The normal method would be to let the APPC controller create itself automatically. However, if preferred, the following command can be used to manually create the APPC controller.

To create a LAN controller description, enter **crtctlappc** on the AS/400 Main Menu.

```
MAIN                              AS/400 Main Menu
                                                    System:     RALYAS4B
Select one of the following:

      1. User tasks
      2. Office tasks
      3. General system tasks
      4. Files, libraries, and folders
      5. Programming
      6. Communications
      7. Define or change the system
      8. Problem handling
      9. Display a menu
     10. Information Assistant options
     11. Client Access tasks

     90. Sign off

Selection or command
===> crtctlappc

F3=Exit    F4=Prompt    F9=Retrieve    F12=Cancel    F13=Information  Assistant
F23=Set initial menu
```

Press F4 (Prompt). The Create Controller Description panel will be displayed.

Enter values for each parameter on the panel.

```
                        Create Ctl Desc (APPC) (CRTCTLAPPC)

Controller description . . . . . > PCOMMLAN          Name
Link type  . . . . . . . . . . . > *LAN              *ANYNW, *FAX, *FR, *IDLC...
Online at IPL  . . . . . .    *YES                   *YES, *NO
APPN-capable . . . . . .      *YES                   *YES, *NO
Switched line list . . . . . . . > TRN2619           Name
                    + for more values
Maximum frame size . . . . . .    *LINKTYPE          265-16393, 256, 265, 512...
Remote network identifier  . . .  *NETATR           Name, *NETATR, *NONE, *ANY
Remote control point . . . . . > PEPE                Name, *ANY
Exchange identifier  . . . . . .                     00000000-FFFFFFFF
Initial connection . . . . . .    *DIAL              *DIAL, *ANS
Dial initiation  . . . . . .      *LINKTYPE          *LINKTYPE, *IMMED, *DELAY
LAN remote adapter address . . .  400052005109      000000000001-FFFFFFFFFFFF
APPN CP session support  . . . .  *NO                *YES, *NO
APPN node type . . . . . .        *LENNODE           *ENDNODE, *LENNODE...
APPN/HPR capable . . . . . .      *YES               *YES, *NO
                                                                          More...
F3=Exit    F4=Prompt    F5=Refresh    F12=Cancel    F13=How to use this display
F24=More keys
```

```
                        Create Ctl Desc (APPC) (CRTCTLAPPC)

Type choices, press Enter.

APPN transmission group number        1                  1-20, *CALC
APPN minimum switched status . .   *VRYONPND           *VRYONPND, *VRYON
Autocreate device  . . . . . .     *ALL                *ALL, *NONE
Autodelete device  . . . . . .     1440                1-10000, *NO
User-defined 1 . . . . . .         *LIND               0-255, *LIND
User-defined 2 . . . . . .         *LIND               0-255, *LIND
User-defined 3 . . . . . .         *LIND               0-255, *LIND
Model controller description . .   *NO                 *NO, *YES
Text 'description' . . . . . .     PCOMM token-ring

                                                                          Bottom
F3=Exit    F4=Prompt    F5=Refresh    F10=Additional parameters    F12=Cancel
F13=How to use this display              F24=More keys
```

Press Enter to save the controller description pcommlan.

The APPC Device Description will create itself automatically. Personal Communications attaches to the AS/400 using the controller description that was just created.

Appendix E. AnyNet Configuration Examples

This section includes examples of AnyNet running SNA over IP connections. The following configuration instructions are complete only for the Windows NT and the Windows 95 operating systems. In all examples, the SNA domain name suffix is SNA.IBM.COM.

For more information about AnyNet as part of Personal Communications, refer to the *Personal Communications Reference* manual. For more information about configuring AnyNet for any other platforms mentioned in this section (such as VTAM or AS/400), refer to the appropriate product documentation.

Example 1. 5250 Emulation Over a TCP/IP Network

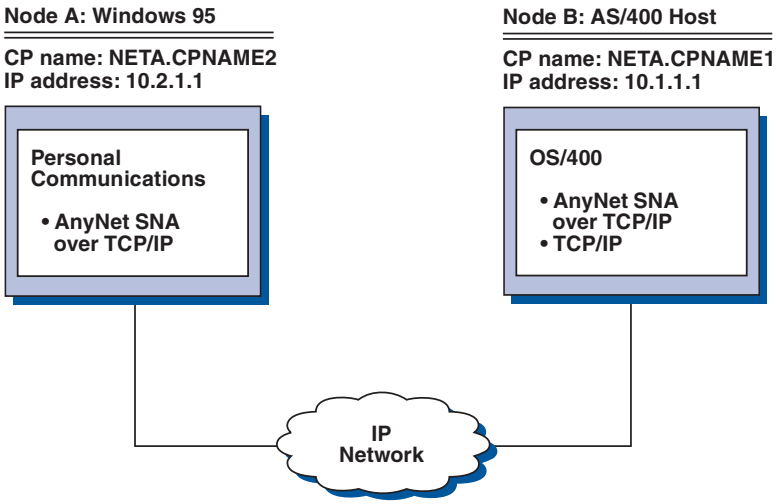

Steps

Follow these steps to establish communications between the Windows 95 workstation (Node A) and the AS/400 host (Node B).

For Windows 95 Node A, do as follows:

1. Add the following entries to the local HOSTS file:

   10.1.1.1 CPNAME1.NETA.SNA.IBM.COM

2. Create a workstation profile using the Personal Communications configuration tool:

   a. Click on the **Start/Configure Session** icon. The Customize Communication window is displayed.

   b. Select the following options:

      Host: AS/400

      Interface: AnyNet

      Attachment: TCP/IP 5250

© Copyright IBM Corp. 1989, 1997

c. Click on **Configure**.

d. Click on **Configure Link**.

e. On the Configure Local System window, enter:

PC Location Name: NETA.CPNAME2

On the Configure Logical Connection Windows, enter:

System Location Name: NETA.CPNAME1

f. Save your workstation profile.

For AS/400 Node B, add the following entry to the local HOSTS file:

10.2.1.1 CPNAME2.NETA.SNA.IBM.COM

Example 2. Running APPC or CPI-C Applications over a TCP/IP Network

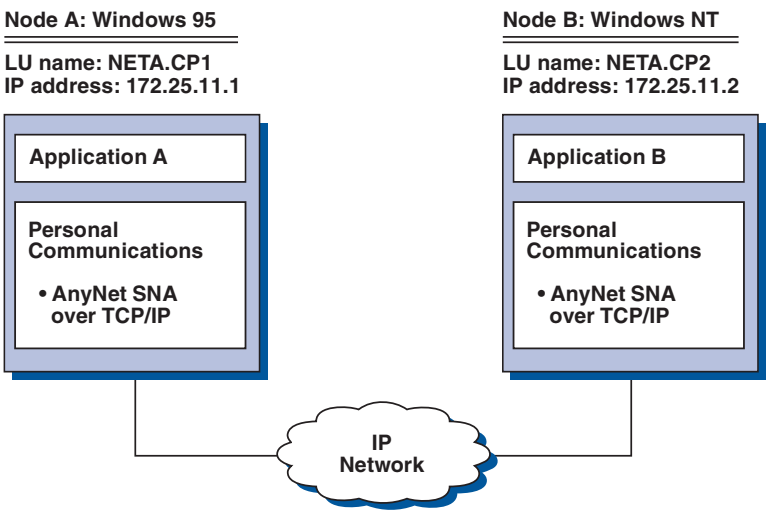

Steps

Follow these steps to establish communications between a Windows NT node and a Windows 95 node. Note that in this example, the CP names are used as LU names.

For Windows 95 Node A, do as follows:

1. Add the following entry to the local HOSTS file:

   172.25.11.2 CP2.NETA.SNA.IBM.COM

2. Create a configuration using the Personal Communications configuration tool:

   a. Click on the **SNA Node Configuration** icon. The Personal Communications SNA Node Configuration window is displayed.

   b. In the Configuration Options list, choose **Configure Node** and click on **New**.

   c. On the Define the Node window on the Basic tab, enter:

Fully qualified CP name: NETA.CP1

Click on **OK** to complete node configuration.

d. Choose **Configure Devices**. In the **DLCs** list, choose **AnyNet SNA/IP** and click on **New**.

e. On the Define an AnyNet SNA over TCP/IP Device window on the Basic tab, enter:

SNA domain name suffix: SNA.IBM.COM

f. Click on the **Routing Preferences** tab:

Default Routing Preference: Non-native only

Click on **OK** to complete configuration of the AnyNet device.

g. From the Personal Communications SNA Node Configuration window, click on **File**. Click on **Save as...** and enter the desired file name to save.

For Windows NT Node B, do as follows:

1. Add the following entry to the local HOSTS file:

   172.25.11.1 CP1.NETA.SNA.IBM.COM

2. Create a configuration using the Personal Communications configuration tool:

   a. Click on the **SNA Node Configuration** icon. The Personal Communications SNA Node Configuration window is displayed.

   b. In the Configuration Options list, choose **Configure Node** and click on **New**.

   c. On the Define the Node window on the Basic tab, enter:

   Fully qualified CP name: NETA.CP2

   Click on **OK** to complete node configuration.

   d. Choose **Configure Devices**. In the DLCs list, choose **AnyNet SNA/IP** and click on **New**.

   e. On the Define an AnyNet SNA over TCP/IP Device window on the Basic tab, enter:

   SNA domain name suffix: SNA.IBM.COM

   f. Click on the **Routing Preferences** tab:

   Default Routing Preference: Non-native only

   Click on **OK** to complete configuration of the AnyNet device.

   g. From the Personal Communications SNA Node Configuration window, click on **File**. Click on **Save as...** and enter the desired file name to save.

3. Start Personal Communications on each machine.

4. Start your applications (for example APING).

Example 3. APPC3270 Emulation over a TCP/IP Network

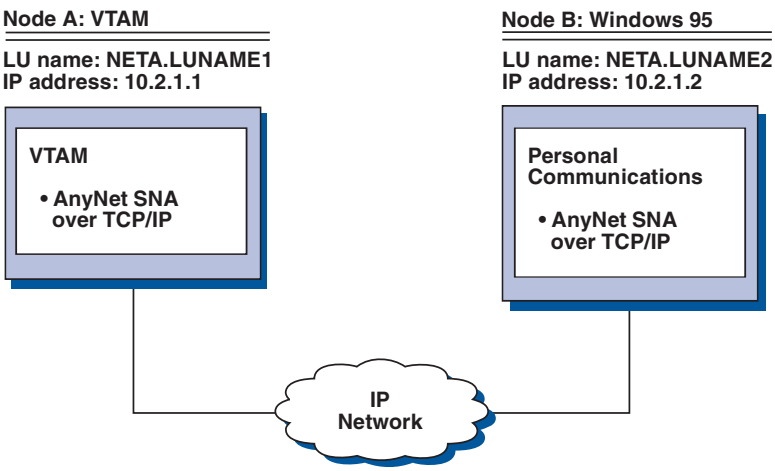

Steps

Follow these steps to establish communications between the VTAM host (Node A) and the Windows 95 (Node B).

For VTAM Node A, add the following entry to the local HOSTS file:

10.2.1.2 LUNAME2.NETA.SNA.IBM.COM

For Windows 95 Node B, do as follows:

1. Add the following entry to the local HOSTS file:

   10.1.1.1 LUNAME1.NETA.SNA.IBM.COM

2. Create a workstation profile using the Personal Communications configuration tool:

   a. Click on the Start/Configure Session icon. The Customize Communication window is displayed.

   b. Select the following options:

      Host: S/390

      Interface: AnyNet

      Attachment: APPC3270

   c. Click on **Configure**.

   d. Click on **Configure Link**.

   e. On the Configure Local System window, enter:

      PC Location Name: NETA.LUNAME2

   f. On the Configure Logical Connection window, enter:

      System location name: NETA.LUNAME1

      Routing Preference: Non-native only

   g. On the Configure AnyNet Connection window, enter:

SNA domain name suffix: SNA.IBM.COM

h. Save your workstation profile.

Example 4. 3270 Emulation via DLUR over a TCP/IP Network

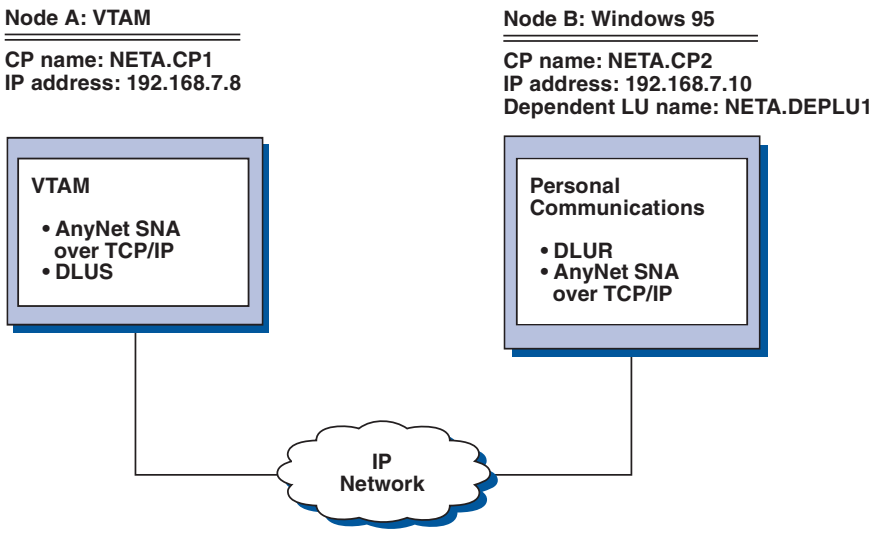

Steps

Follow these steps to establish communications between the VTAM Host (Node A) and the Windows 95 workstation (Node B).

For VTAM Node A, add the following entry to the HOSTS file:

```
192.168.7.10    CP2.NETA.SNA.IBM.COM
192.168.7.10    DEPLU1.NETA.SNA.IBM.COM
```

For Windows 95 Node B, do as follows:

1. Add the following entry to the local HOSTS file:

   ```
   192.168.7.8      CP1.NETA.SNA.IBM.COM
   ```

2. Create a workstation profile using the Personal Communications configuration tool:

   a. Click on the **Start/Configure Session** icon. The Customize Communication window is displayed.

   b. Select the following options:

      Host: S/390

      Interface: AnyNet

      Attachment: TCP/IP LU 0,1,2,3 via DLUR

   c. Click on **Configure**.

   d. Click on **Configure Link**.

   e. On the Configure Local System window, enter:

PC Location Name: NETA.CP2

f. On the Configure DLUR window, enter:

DLUS name: NETA.CP1

Routing Preference: Non-native only

g. On the Configure AnyNet Connection window, enter:

SNA domain name suffix: SNA.IBM.COM

h. Save your workstation profile.

Example 5. 3270 Emulation over a TCP/IP Network via an SNA Gateway to a VTAM Host on an SNA Network

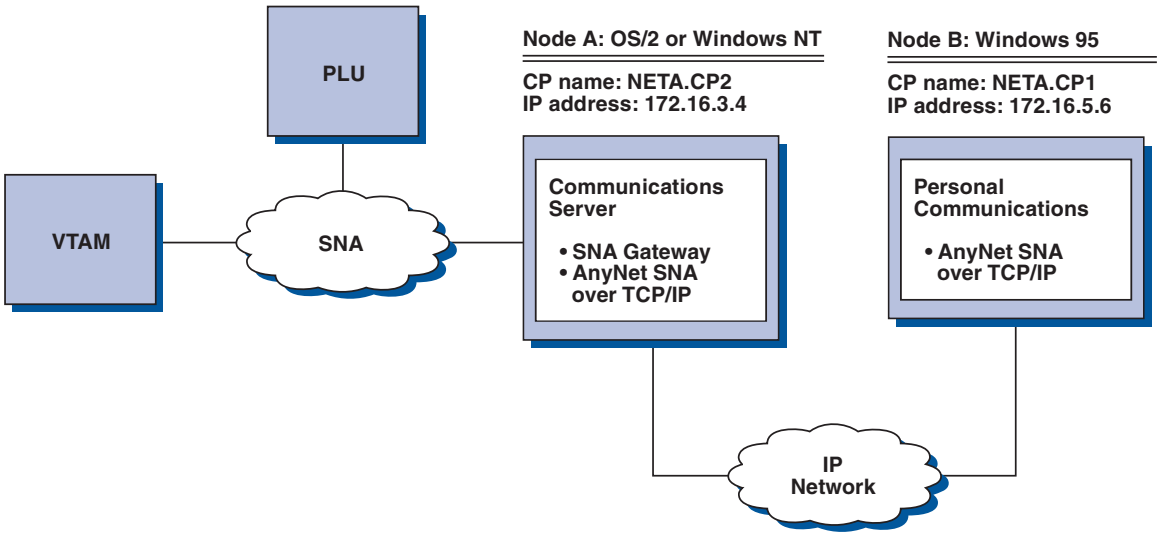

Steps

For OS/2 (or Windows NT) Node A, add the following entry to the HOSTS file:

172.16.5.6 CP1.NETA.SNA.IBM.COM

Follow these steps to establish communications between the Windows 95 workstation (Node B) and the VTAM host.

For Windows 95 Node B, do as follows:

1. Add the following entry to the local HOSTS file:

   172.16.3.4 CP2.NETA.SNA.IBM.COM

2. Create a workstation profile using the Personal Communications configuration tool:

   a. Click on the **Start/Configure Session** icon. The Customize Communication window is displayed.

   b. Select the following options:

   Host: S/390

Interface: AnyNet

Attachment: TCP/IP LU 0,1,2,3

c. Click on **Configure**.

d. Click on **Configure Link**.

e. On the Configure Local System window, enter:

PC Location Name: NETA.CP1

f. On the Configure AnyNet Connection window, enter:

SNA domain name suffix: SNA.IBM.COM

Fully qualified CP name: NETA.CP2

g. Save your workstation profile.

Example 6. 3270 Emulation via an SNA Gateway over a TCP/IP Network

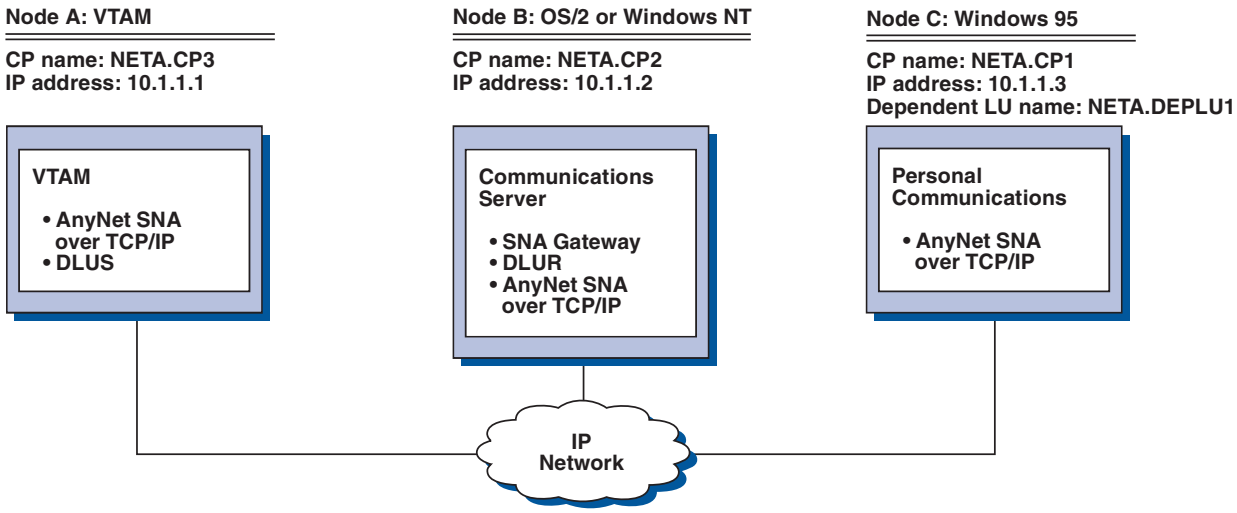

Steps

Follow these steps to establish communications between the Windows 95 Workstation (Node C) and the VTAM host (Node A).

For VTAM Node A, add the following entry to the HOSTS file:

```
10.1.1.2    CP2.NETA.SNA.IBM.COM
10.1.1.2    DEPLU1.NETA.SNA.IBM.COM
```

For OS/2 Node B, add the following entry to the HOSTS file:

```
10.1.1.3  CP1.NETA.SNA.IBM.COM
10.1.1.1  CP3.NETA.SNA.IBM.COM
```

For Windows 95 Node C, do as follows:

1. Add the following entry to the local HOSTS file:

```
10.1.1.2    CP2.NETA.SNA.IBM.COM
```

2. Create a workstation profile using the Personal Communications configuration tool:
   a. Click on the **Start/Configure Session** icon. The Customize Communication window is displayed.
   b. Select the following options:

      Host: S/390

      Interface: AnyNet

      Attachment: TCP/IP LU 0,1,2,3
   c. Click on **Configure**.
   d. Click on **Configure Link**.
   e. On the Configure Local System window, enter:

      PC Location Name: NETA.CP1
   f. On the Configure AnyNet Connection window, enter:

      SNA domain name suffix: SNA.IBM.COM

      Fully qualified CP name: NETA.CP2
   g. Save your workstation profile.

Example 7. 3270 Emulation over a TCP/IP Network via an AnyNet SNA/IP Gateway to a VTAM Host on an APPN Network

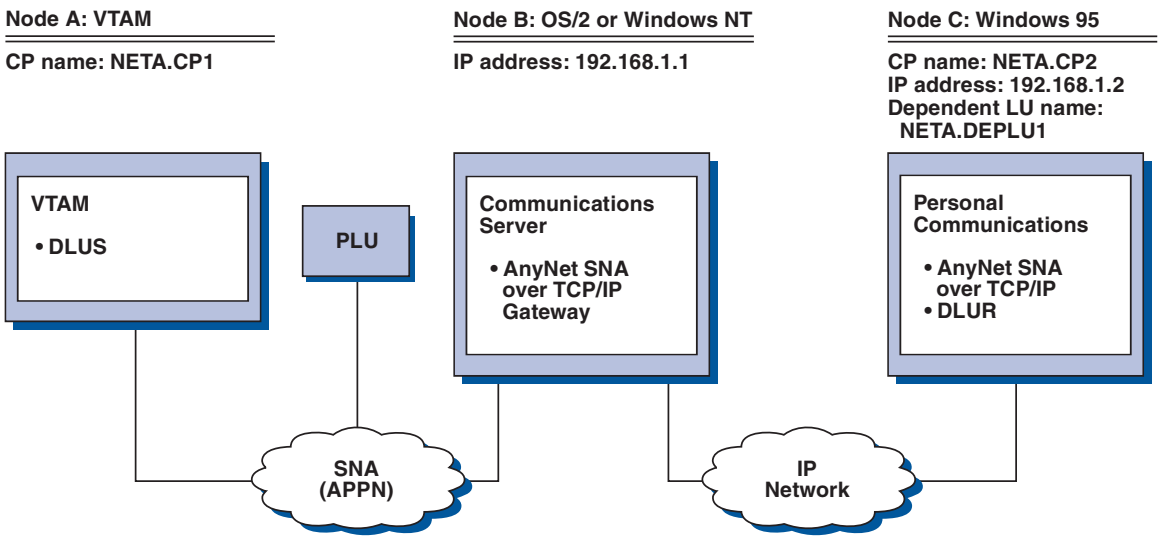

Steps

Follow these steps to establish communications between the OS/2 (or Windows NT) workstation (Node B) and the Windows 95 workstation (Node C).

For OS/2 (or Windows NT) Node B, add the following entries to the HOSTS file:

```
192.168.1.2  CP2.NETA.SNA.IBM.COM
127.0.0.2    DEPLU1.NETA.SNA.IBM.COM
192.168.1.2  DEPLU1.NETA.SNA.IBM.COM
```

For Windows 95 Node C, do as follows:

1. Add the following entry to the local HOSTS file:

   ```
   192.168.1.1  CP1.NETA.SNA.IBM.COM
   ```

2. Create a workstation profile using the Personal Communications configuration tool:
   a. Click on the **Start/Configure Session** icon. The Customize Communication window is displayed.
   b. Select the following options:

      Host: S/390

      Interface: AnyNet

      Attachment: TCP/IP LU 0,1,2,3 via DLUR

   c. Click on **Configure**.
   d. Click on **Configure Link**.
   e. On the Configure Local System window, enter:

      PC Location Name: NETA.CP2

   f. On the Configure DLUR window, enter:

      DLUS name: NETA.CP1

      Routing Preference: Non-native only

   g. On the Configure AnyNet Connection window, enter:

      SNA domain name suffix: SNA.IBM.COM

   h. Save your workstation profile.

Example 8. 3270 Emulation from a Windows NT Workstation and a Windows 95 Workstation on Different IP Networks

AnyNet Examples

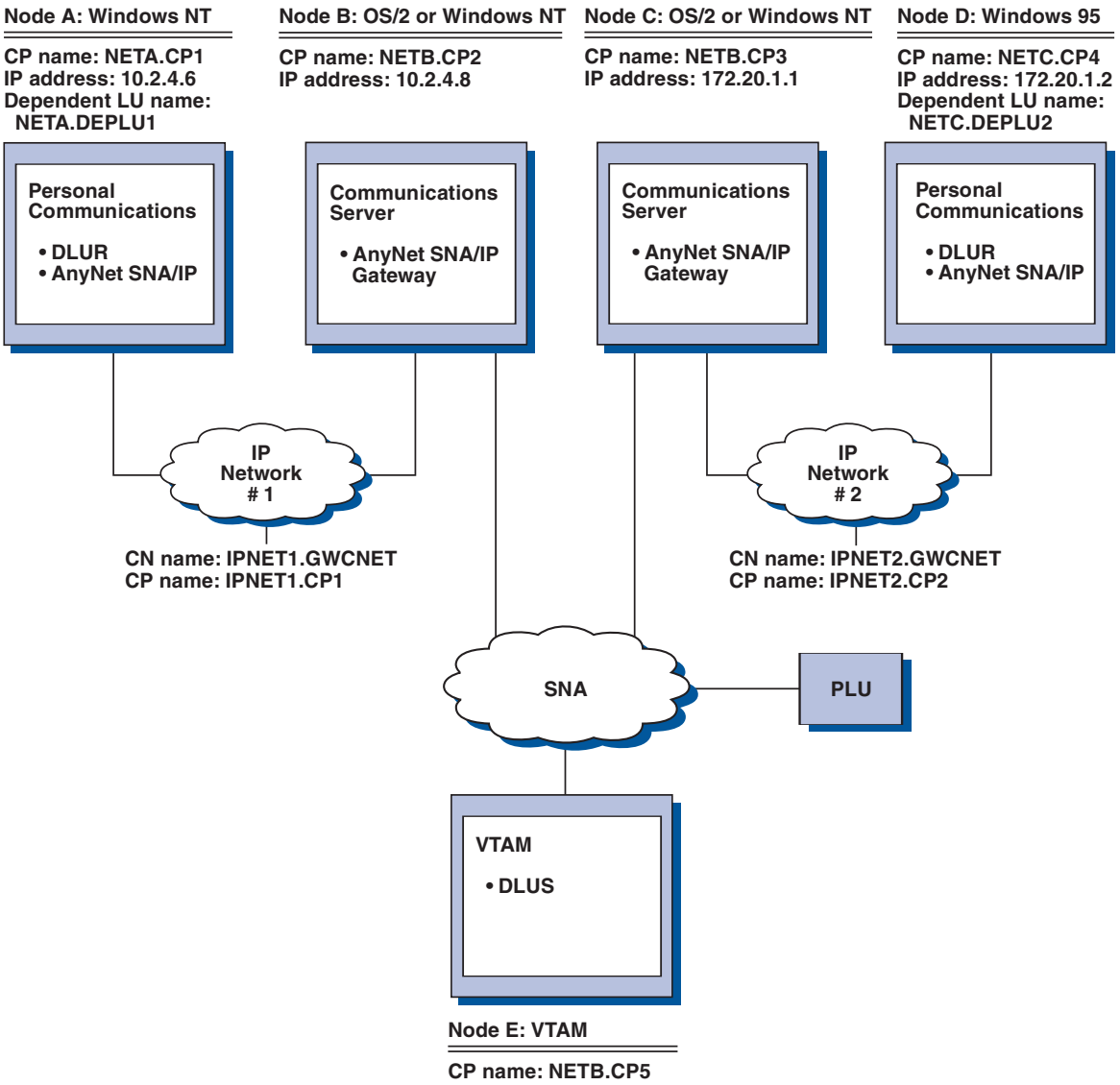

Steps

Follow these steps to establish communications from the Windows NT workstation (Node A), and from Windows 95 (Node D), to the VTAM Host (Node E).

For Windows NT Node A, do as follows:

1. Add the following entries to the local HOSTS file:

   ```
   10.2.4.8      CP5.NETB.SNA.IBM.COM
   127.0.0.4     IPNET1.GWCNET
   127.0.0.3     IPNET1.CP1
   ```

2. Create a workstation profile using the Personal Communications configuration tool:

   a. Click on the **Start/Configure Session** icon. The Customize Communication window is displayed.

   b. Select the following options:

Host: S/390

Interface: AnyNet

Attachment: TCP/IP LU 0,1,2,3 via DLUR

c. Click on **Configure**.

d. Click on **Configure Link**.

e. On the Configure Local System window, enter:

PC Location Name: NETA.CP1

f. On the Configure DLUR window, enter:

DLUS name: NETB.CP5

Routing Preference: Non-native only

g. On the Configure AnyNet Connection window, enter:

SNA domain name suffix: SNA.IBM.COM

h. Save your workstation profile.

For OS/2 (or Windows NT) Node B, add the following entries to the HOSTS file:

```
10.2.4.6      CP1.NETA.SNA.IBM.COM
127.0.0.2     DEPLU1.NETA.SNA.IBM.COM
10.2.4.6      DEPLU1.NETA.SNA.IBM.COM
127.0.0.4     IPNET1.GWCNET
127.0.0.3     IPNET1.CP1
```

For OS/2 (or Windows NT) Node C, add the following entries to the HOSTS file:

```
172.20.1.2    CP4.NETC.SNA.IBM.COM
127.0.0.2     DEPLU2.NETC.SNA.IBM.COM
172.20.1.2    DEPLU2.NETC.SNA.IBM.COM
127.0.0.4     IPNET2.GWCNET
127.0.0.3     IPNET2.CP2
```

For Windows NT Node D, do as follows:

1. Add the following entry to the local HOSTS file:

```
172.20.1.1    CP5.NETB.SNA.IBM.COM
127.0.0.4     IPNET2.GWCNET
127.0.0.3     IPNET2.CP2
```

2. Create a workstation profile using the Personal Communications configuration tool:

   a. Click on the **Start/Configure Session** icon. The Customize Communication window is displayed.

   b. Select the following options:

   Host: S/390

   Interface: AnyNet

   Attachment: TCP/IP LU 0,1,2,3 via DLUR

   c. Click on **Configure**.

   d. Click on **Configure Link**.

   e. On the Configure Local System window, enter:

PC Location Name: NETC.CP4

f. On the Configure DLUR window, enter:

DLUS name: NETB.CP5

Routing Preference: Non-native only

g. On the Configure AnyNet Connection window, enter:

SNA domain name suffix: SNA.IBM.COM

h. Save your workstation profile.

Appendix F. Configuring Multiple Links

Many customers must attach to multiple AS/400 and S/390 mainframe systems. Personal Communications allows this type of configuration. The following sections explain how to do this.

Note: You do not need to read this section if you want to create multiple sessions on the same host.

Configuring a Second 3270 Emulation Link

Recommendation

If you want a second SNA connection (link) to run concurrently, we strongly recommend that you configure it in the same .PCG file as the first one; this will avoid any possible conflict of settings.

Here are the steps you should follow. You can make the configuration even if the first link is active.

1. Double-click the **Start or Configure Session** icon to start a new session.
2. Choose the host, interface, and attachment type, as usual.
3. Configure the session parameters, then click **Configure Link**.
4. In the Configure Local System panel, check that the default .PCG file is the one in which you saved the configuration for the first link. If not, click **Existing** and choose the correct file from the list.
5. Check that the settings for the first link are correct. Click **Next**.
6. The Configure LAN Connection panel appears. Notice that the Link Station Name has changed (for example, if the first link was LINK0000, the field now shows LINK0001) and the Destination Address field shows 400000000000. Enter the Destination Address for the second link, and change the other parameters if you want to.
7. Click **Advanced**.
8. The panel shows the block ID and PU ID for the first link. Change them as necessary to the values for the second link. Click **OK.**
9. Click **Next**, then **Finish**, and save the .ACG file (replace the existing file). Then click **OK** until you return to the session window. If you have done everything correctly, and if the gateway or controller is running, you should get a connection.

You can add further 3270 links in the same way.

© Copyright IBM Corp. 1989, 1997

Configuring a Second 5250 Emulation Link

The steps you should follow are almost the same as for 3270. You can make the configuration even if the first link is active:

1. Double-click the **Start or Configure Session** icon to start a new session.
2. Choose the host, interface, and attachment type, as usual.
3. Configure the session parameters, then click **Configure Link.**
4. In the Configure Local System panel, check that the default .PCG file is the one in which you saved the configuration for the first link. If not, click **Existing** and choose the correct file from the list.
5. Check that the settings for the first link are correct. Click **Next.**
6. The Configure Logical Connection panel appears, showing the settings for the first link. If you are going to connect to a different AS/400, change the System Location Name. Click **Next.**
7. The Configure LAN Connection panel appears. If the Link Station Name has not changed, change it.
8. Change the Destination Address (and the other parameters if necessary). If you want to change the Local SAP number or the Receive Buffer Count, (which is unlikely), click **Advanced.** If not, click **Next**, then **Finish**, and save the .ACG file (replace the existing file), then click **OK** until you return to the session window.

You can add further 5250 links in the same way.

Configuring a Second Link of a Different Kind

The rules about this are similar to those for the configurations just described and they apply equally whether you are going to configure two (or more) links that use the same connection type, or links that use different connection types. In this example, we shall assume that you have already configured a 3270 connection and now want to add a 5250 connection. As before, you can make the configuration even if the first link is active.

1. Double-click the **Start or Configure Session** icon to start a new session.
2. Choose AS/400, the LAN interface and the IEEE 802.2 attachment type.
3. Configure the session parameters, then click **Configure Link.**
4. In the Configure Local System panel, check that the default .ACG file is the one in which you saved the configuration for the 3270 link. If not, click **Existing** and choose the correct file from the list. Notice that the PC Location Name is already there. Click **Next.**
5. The Configure Logical Connection panel appears. Enter the System Location Name and click **Next**.
6. Notice that the Link Station Name has changed. Enter the Destination Address of the AS/400. Click **Next**, then Finish, and save the .ACG file (replace the existing file); then click **OK** until you return to the session window.

Appendix G. Default Key Function Assignments

This appendix lists the functions assigned, by default, to each key on your keyboard.

For more information about each function, refer to the **Keyboard** choice on the Help menu.

You can change the default key assignments to the following default function tables, by selecting **Keyboard Setup** from the Assist menu.

When the Keyboard Setup window appears, select one of the following choices:

3270 for a 3270 keyboard layout
5250 for a 5250 keyboard layout
3270+5250 for a combined keyboard layout
VT for a DEC VT220 keyboard layout

Default Key Functions for a 3270 Layout

Table 4 shows the default key functions for PC/3270. The key used is the same for all the supported keyboard types.

Table 4 (Page 1 of 3). Default Key Functions for a 3270 Layout

Function of Key	Key
APL	Ctrl+F8
Attention	Esc
Alternate Cursor	Alt+F11
Backspace	— (Backspace)
Back Tab	Shift+— |
Back Tab Word	Alt+←
Break	Break
Change Format Toggle	Alt+F3
Change Screen	Ctrl+PageUp
Clear	Pause
Color Blue	Ctrl+Shift+F5
Color Field Inherit	Ctrl+Shift+F8
Color Green	Ctrl+Shift+F3
Color Pink	Ctrl+Shift+F2
Color Red	Ctrl+Shift+F1
Color Turquoise	Ctrl+Shift+F6
Color White	Ctrl+Shift+F7
Color Yellow	Ctrl+Shift+F4
Cursor Blink	Ctrl+F10
Cursor Down	↓ or 2(pad)
Cursor Left	← or 4(pad)
Cursor Right	→ or 6(pad)
Cursor Select	Ctrl+F9

© Copyright IBM Corp. 1989, 1997

Table 4 (Page 2 of 3). Default Key Functions for a 3270 Layout

Function of Key	Key
Cursor Up	↑ or 8(pad)
Delete Character	Delete or .(pad)
Delete Word	Ctrl+Delete or Ctrl+.(pad)
Document Mode Toggle	Alt+F1
Dup	Shift+Insert[2]
Edit Copy	Ctrl+Insert
Edit Cut	Shift+Delete
Edit Paste	Shift+PageDown or Ctrl+Shift+Insert
Edit Undo	Alt+ — (Backspace)
End Field	Pad End
Enter	Right Ctrl
Enter/Control	Right Ctrl
Erase EOF	End[2]
Erase Field	Shift+End[2]
Erase Input	Alt+End[2]
Fast Cursor Down	Alt+↓ or Alt+2(pad)
Fast Cursor Up	Alt+↑ or Alt+8(pad)
Field Mark	Shift+Home[2]
Graphic Cursor	Alt+F12
Highlighting Field Inherit	Alt+3(pad)
Highlighting Reverse	Alt+*(pad)
Highlighting Underscore	Alt+6(pad)
Home	Home or 7(pad)
Insert	Insert or 0(pad)
Jump Next	Alt+PageUp
New Line	↵ (Enter)
Mark Down	Shift+↓
Mark Left	Shift+←
Mark Right	Shift+→
Mark Up	Shift+↑
Move Mark Down	Ctrl+↓ or Ctrl+2(pad)
Move Mark Left	Ctrl+← or Ctrl+4(pad)
Move Mark Right	Ctrl+→ or Ctrl+6(pad)
Move Mark Up	Ctrl+↑ or Ctrl+8(pad)
PA1	Alt+Insert[2]
PA2	Alt+Home[2]
PA3	Shift+PageUp[2]

Table 4 (Page 3 of 3). Default Key Functions for a 3270 Layout

Function of Key	Key
Pause	Ctrl+F7
PF1 to PF12	F1 to F12
PF13 to PF24	Shift+F1 to F12
Play	Ctrl+F6
PS Field Inherit	Ctrl+Shift+(pad)0
Print (Local Copy)	Not assigned
Quit (Device Cancel)	Alt+Left Ctrl
Record	Ctrl+F5
Reset/Control	Left Ctrl
Response Time Monitor	Ctrl+F11
Rule	Ctrl+Home
Sys Request	Shift+Esc
Tab Field	— | or Shift+— |(pad)
Tab Word	Alt+→
Test	Ctrl+PageDown
Transparency Field Inherit	Ctrl+Shift+8(pad)
Transparency Opaque	Ctrl+Shift+/(pad)
Word Wrap Toggle	Alt+F2

[2] Indicates the key on the main keyboard.
(*pad*) Indicates a key on the numeric keypad.

Note: The Enhanced keyboard has some duplicated keys. The functions of the duplicated keys are the same except when you specify a single key. For example, *Del* means any Delete key, whereas *Pad Del* specifies only the Delete key on the numeric keypad.

Default Key Functions for a 5250 Layout

Table 5 shows the default key functions for PC400. The key used is the same for all the supported keyboard types.

Note: If you use PC400 from the combined package, see “Default Key Functions for the Combined Package” on page 157.

Table 5 (Page 1 of 3). Default Key Functions for a 5250 Layout

Function of Key	Key
Alternate Cursor	Ctrl+F11
Attention	Esc
Backspace	— (Backspace)
Backtab	Shift+— |
Backtab Word	Alt+←
Begin Bold*	Ctrl+B
Begin of line*	Ctrl+4(pad)
Begin Underscore*	Ctrl+U
Bottom of Page*	Ctrl+2(pad)

Table 5 (Page 2 of 3). Default Key Functions for a 5250 Layout

Function of Key	Key
Carrier Return	Ctrl+Enter or Ctrl+– (pad) or Ctrl++ (pad)
Center Text*	Ctrl+C
Clear	Pause
Cursor Blink	Ctrl+F10
Cursor Down	↓ or 2(pad)
Cursor Left	← or 4(pad)
Cursor Right	→ or 6(pad)
Cursor Up	↑ or 8(pad)
Delete Character	Delete or .(pad)
Delete Word	Ctrl+Delete or Ctrl+.(pad)
Display Text Code	Alt+Insert
Dup	Shift+Insert
Edit Copy	Ctrl+Insert
Edit Cut	Shift+Delete ¬ 1-
Edit Paste	Shift+PageDown or Ctrl+Shift+Insert
Edit Undo	Alt+ — (Backspace)
End Bold/Underscore*	Ctrl+J
End of line*	Ctrl+6(pad)
End of page*	Ctrl+P
Enter/Control	Right Ctrl
Erase EOF	End or 1(pad)
Erase Input	Alt+End
Fast Cursor Down	Alt+↓ or Alt+2(pad)
Fast Cursor Up	Alt+↑ or Alt+8(pad)
Field Exit	Enter(pad) or ┘ (Enter)
Field Mark	Shift+Home
Field Minus (–)	–(pad)
Field Plus (+)	+ (pad)
Half Index Down*	Ctrl+H
Half Index Up*	Ctrl+Y
Help	Alt+F1
Home	Home or 7(pad)
Host Print	Ctrl+Pause
Insert	Insert or 0 (pad)
Insert Symbol*	Ctrl+A
Jump Next	Alt+PageUp
Mark Down	Shift+↓
Mark Left	Shift+←

Table 5 (Page 3 of 3). Default Key Functions for a 5250 Layout

Function of Key	Key
Mark Right	Shift+→
Mark Up	Shift+↑
Move Mark Down	Ctrl+↓
Move Mark Left	Ctrl+←
Move Mark Right	Ctrl+→
Move Mark Up	Ctrl+↑
New Line	Shift+ ↵ (Enter)
Next Column*	Ctrl+D
Next Stop*	Ctrl+N
Pause	Ctrl+F7
PF1 to PF12	F1 to F12
PF13 to PF24	Shift+F1 to F12
Play	Ctrl+F6
Quit	Alt+Left Ctrl
Record	Ctrl+F5
Required Backspace	Ctrl+ — (Backspace)
Required Space*	Ctrl+Space
Required Tab*	Ctrl+— |
Reset/Control	Left Ctrl
Roll Down	9(pad) or PageUp
Roll Up	3(pad) or PageDown
Rule	Ctrl+Home
Stop Code*	Ctrl+S
System Request	Shift+Esc
Tab Field	— |
Tab Word	Alt+→
Test Request	Alt+Pause
Top of Page*	Ctrl+8(pad)
Word Underscore*	Ctrl+W

(pad) indicates a key on the numeric keypad.
* indicates a Text Assist Key (SBCS only).

Default Key Functions for the Combined Package

Table 6 shows the default key functions for the combined package. The key used is the same for all the supported keyboard types.

When you use the 3270+5250 keyboard layout, the key definitions for the 3270 and 5250 layouts are combined with those listed here.

Table 6 (Page 1 of 2). Default Key Functions for the Combined Package

Function of Key	Key
Change Screen	Not assigned

Table 6 (Page 2 of 2). Default Key Functions for the Combined Package

Function of Key	Key
Character Advance	Shift+BackSpace
Help	Not assigned
Host Print	Not assigned
PA3	Not assigned
Roll Down	PageUp
Roll Up	PageDown

Default Key Functions for the VT Emulator Layout

Table 7 shows the default key functions for VT220, VT100 and VT52. The key used is the same for all the supported keyboard types. The VT emulator keyboard gets selected as the default only when the "VT Component" is selected in the installation path.

Table 7 (Page 1 of 2). Default Key Functions for a VT Emulator Layout

Function of Key	Key
Backspace	— (Backspace)
Break	Ctrl+Pause
CAN	Ctrl+ — (Backspace)
Cursor Down	↓ or 2(pad)
Cursor Left	← or 4(pad)
Cursor Right	→ or 6(pad)
Cursor Up	↑ or 8(pad)
Edit Copy	Ctrl+Insert
Edit Cut	Shift+Delete
Edit Paste	Shift+PageDown or Ctrl+Shift+Insert
Edit Undo	Alt+ — (Backspace)
ESC	ESC
Jump Next	Alt+PageUp
New Line	↵ (Enter)
Mark Down	Shift+↓
Mark Left	Shift+←
Mark Right	Shift+→
Mark Up	Shift+↑
Move Mark Down	Ctrl+↓ or Ctrl+2(pad)
Move Mark Left	Ctrl+← or Ctrl+4(pad)
Move Mark Right	Ctrl+→ or Ctrl+6(pad)
Move Mark Up	Ctrl+↑ or Ctrl+8(pad)
PF6 to PF12	F6 to F12
PF13 to PF20	Shift+F1 to F8

Table 7 (Page 2 of 2). Default Key Functions for a VT Emulator Layout

Function of Key	Key
Rule	Ctrl+Home
Tab Field	—| or Shift+—|
VT Enter	Shift+Enter(pad)
VT Find	End[2] or 1(pad)
VT Hold	Pause
VT Insert	Insert or 0(pad)
VT Next	Page Down[2] or 3(pad)
VT Numpad 0 to VT Numpad 9	Shift+0(pad) to Shift+9(pad)
VT Numpad Comma	Shift++(pad)
VT Numpad Minus	-(pad) or Shift+-(pad)
VT Numpad Period	Shift+.(pad)
VT PF1 to VT PF4	F1 to F4
VT Prev	Page Up[2] or 9(pad)
VT Remove	Delete or .(pad)
VT Select	Home[2] or 7(pad)
VT User F6 to VT User F12	Ctrl+F6 to F12
VT User F13 to VT User F20	Ctrl+Shift+F1 to F8

[2] Indicates the key on the main keyboard.
(*pad***)** Indicates a key on the numeric keypad.

Note: The Enhanced keyboard has some duplicated keys. The functions of the duplicated keys are the same except when you specify a single key. For example, *Del* means any Delete key, whereas *Pad Del* specifies only the Delete key on the numeric keypad.

Key Functions and Assignments

Appendix H. Configuring Your Workstation for Thai, Arabic or Hebrew

Configuring for Thai

To configure for the Thai language:

1. Select **Communication** menu
2. Select **Configure...**
3. For each configuration, select Host Code-Page to be one of the following:

   838 Thai
   037 Thai/US

To enable Thai keyboard input:

1. Select **Assist** menu
2. Select **Keyboard Setup...**
3. Select **Keyboard Layout: Thai**

Note: Thai features are enabled when runs on Windows 95 Thai only and these Thai settings are defaults.

Configuring for Arabic or Hebrew

To set up an Arabic or Hebrew workstation, verify that you have fulfilled the following definitions:

1. Select **Configure** from the Communication pull-down menu and then select **Configure** once again to display the Customize Communication panel. Select **420 Arabic Speaking** for Arabic or **424 Hebrew (Bulletin Code)** or **803 Hebrew (Old Code)** as the host code page for Hebrew.
2. Select **Keyboard Setup** from the Assist pull-down menu. Select **Arabic Speaking** as the keyboard layout for Arabic. Select **424 Hebrew (Bulletin Code)** or **803 Hebrew (Old Code)** as the keyboard layout for Hebrew.
3. Select **Font Size** from the Appearance pull-down menu. For Arabic, choose **ARB3270** at the Automatic Sizing list box or at the Fixed size font selection. For Hebrew, select **HEB3270** in these same places.
4. Select **API Setting** from the Files pull-down menu and then select **864** as the DDE/EHLLAPI PC Code-Page for Arabic. For Hebrew, select **862** in the same place.

For Arabic, to setup for Numeric Swapping or Symmetric Swapping:

1. Select **Display Setup** from the Appearance pull-down.
2. Select **Swapping** from the list box at the left; the settings for numerics and symmetric characters are displayed. Changes are immediately reflected on the active session.

   Note: Numeric Swapping is a 3270-only feature. This function will not be selectable if the session is an AS/400 session.

© Copyright IBM Corp. 1989, 1997

File Transfer

For Arabic, when transferring files between the PC and the host, the available PC code pages are code page 864 (the IBM PC Arabic code page) and code page 1256, the Microsoft Arabic windows code page.

For Hebrew, when transferring files between the PC and the host, the available PC code pages are code page 862 (the IBM PC Hebrew code page) and Code page 916 for the Hebrew ISO-conforming code page.

For Code Page 1256 Only

You must set the parameter for the orientation of the HOST File. Set the parameter as follows:

Select Transfer→Setup→Miscellaneous Settings

1. For right-to-left host file orientation, mark the **HostFile Orientation** box.
2. For left-to-right host file orientation, unmark the **HostFile Orientation** box.

Data Transfer for Arabic

When transferring SQL Data between the PC and the AS/400, the available PC code page is code page 864 (the IBM Arabic Code page) and code page 1256 for the Microsoft Arabic windows code page. To transfer data, do as follows:

1. Select **Setup** → **Translation Table Setup**.
2. Select **User Defined**.
3. Select **Host Codepage : 420 Arabic Speaking**.
4. Select **PC Codepage : 864 or 1256**.

If code page 1256 is selected, the user must then set the parameter for the orientation of the host file, as explained above.

Refer to the *Reference* manual, where the chapter “Country Codes, Code Pages and Character Sets” shows the actual code pages, and where the Appendix “Bidirectional Language Support” provides additional information.

Appendix I. API Client Attachments

Communications Server for Windows NT and NetWare for SAA

Support for Communications Server/NT

If you are connecting to a Communications Server for Windows NT by using the Communications Server/NT client or installing on the Communications Server/NT machine, configure Personal Communications to use the **SNA API client** interface.

Three different connectivities apply:

Host 390 APPC3270 or LUA3270

AS/400 5250

Support for NetWare for SAA

If you are running a Netware for SAA Version 2.2, you can download the client from the server to your workstation. To configure support for this, choose **API Client** from the Interface column of the Customize Communication window and then choose the connectivity that applies.

If you are connecting to NetWare SAA Version 2.0, the client is present on the Personal Communications CD. First install the client, then install Personal Communications. In the configuration step, choose **API Client** for the interface and then choose the connectivity that applies.

NetWare Coexisting with LAN

If you want to use LAN via NetWare for SAA, or if you want to use NetWare Client and the LAN connection of Personal Communications simultaneously, you should use the NDIS driver.

The API client attachments let you use an interface provided by another application to make a Personal Communications connection.

Three interfaces are supported:

1. **Communications Server for Windows NT**

   You can run Personal Communications on a Communications Server; it uses Communications Server's protocol stack to connect to the host.

2. **Client for Communications Server for Windows NT**

   For client workstations, Communications Server has a client that communicates with the server and provides an interface that Personal Communications can use. The client must be installed on your workstation before you install Personal Communications.

3. **Client for NetWare for SAA**

   Two versions of NetWare for SAA are supported, 2.0 and 2.2. Both provide 'hot backup' and 'load balancing'. They have different clients but the requirements are the same for both:

© Copyright IBM Corp. 1989, 1997

The Novell NetWare client for Windows NT must be installed.
The NetWare for SAA client (appropriate to the version of the gateway you will use) must be installed. For NetWare for SAA 2.0, the client is provided with Personal Communications. For NetWare for SAA 2.2, you must install the client provided with that product.
Both clients must be installed before you install Personal Communications.
You must create an INI file for the NetWare for SAA client, as described in the NWSAA 2.0 client Readme file.

Notes:

a. You cannot install Personal Communications' own SNA protocol drivers if you intend to use the API Client interface. You can, however, use the non-SNA attachment types, which include HPO, Home3270, TN3270, and IPX/SPX.

b. The Netware for SAA connections discussed here are separate from the IPX/SPX connection which you can configure through the LAN interface.

The API client interface lets you make the following attachments:

3270 emulation

LUA - LU 0, 1, 2 or 3 via the WinRUI interface. This lets you have normal display or printer sessions.

APPC3270

This provides 3270 display sessions (not printer) over an LU 6.2 connection to the host.

5250 emulation

This provides 5250 display and printer sessions through APPC.

Appendix J. Notices

References in this publication to IBM products, programs, or services do not imply that IBM intends to make these available in all countries in which IBM operates. Any reference to an IBM product, program or service is not intended to state or imply that only IBM's product, program, or service may be used. Subject to IBM's valid intellectual property or other legally protectable rights, any functionally equivalent product, program, or service may be used instead of the IBM product, program, or service. Evaluation and verification of operation in conjunction with other products, programs, or services, except those expressly designated by IBM, are the user's responsibility.

IBM may have patents or pending patent applications covering subject matter in this document. The furnishing of this document does not give you any license to these patents. You can send license inquiries, in writing, to the IBM Director of Licensing, IBM Corporation, 500 Columbus Avenue, Thornwood, NY 10594, U.S.A.

For license inquiries regarding double-byte character set (DBCS) information, contact:

IBM World Trade Asia Corporation Commercial Relations
IBM Kamiya-cho Building, 4-3-9 Toranomon, Minato-ku
Tokyo, Japan

Licensees of this program who wish to have information about it for the purpose of enabling: (i) the exchange of information between independently created programs and other programs (including this one) and (ii) the mutual use of the information which has been exchanged, should contact:

Site Counsel
IBM Corporation
P.O. Box 12195
3039 Cornwallis Road
Research Triangle Park, NC 27709-2195
USA

Such information may be available, subject to appropriate terms and conditions, including in some cases, payment of a fee.

The licensed program described in this document and all licensed material available for it are provided by IBM under terms of the IBM Customer Agreement.

This document is not intended for production use and is furnished as is without any warranty of any kind, and all warranties are hereby disclaimed including the warranties of merchantability and fitness for a particular purpose.

© Copyright IBM Corp. 1989, 1997

Notices

Appendix K. Trademarks

The following terms are trademarks of the IBM Corporation in the United States or other countries or both:

400
ACF/VTAM
AIX
APPN
AS/400
AT
Advanced Peer-to-Peer Networking
AnyNet
Application System/400
BookManager
CICS
CICS/MVS
Client Access
Client Access/400
Current
DB2
DB2/400
DRDA
DisplayWrite
Distributed Relational Database Architecture
GDDM
Global Network
IBM
IBMLink
IIN
Information Assistant
Library Reader
MVS/ESA
Micro Channel
NetView
OS/2
OS/400
OfficeVision
OfficeVision/400
PROFS
PS/2
RS/6000
S/390
SAA
SP
Series/1
System/36
System/370
System/38
System/390
TalkLink
ThinkPad
VM/ESA
VTAM
ValuePoint

PC Direct is a trademark of Ziff Communications Company and is used by IBM Corporation under license.

UNIX is a registered trademark in the United States and other countries licensed exclusively through X/Open Company Limited.

C-bus is a trademark of Corollary, Inc.

Microsoft, Windows, and the Windows 95 logo are trademarks or registered trademarks of Microsoft Corporation.

Other company, product, and service names, which may be denoted by a double asterisk (**), may be trademarks or service marks of others.

© Copyright IBM Corp. 1989, 1997

Trademarks

Glossary

A

access control. In computer security, ensuring that the resources of a computer system can be accessed only by authorized users in authorized ways.

access control profile. A list of the access privileges assigned to users and groups for a particular network resource in a domain.

access priority. In the IBM Token-Ring Network, the maximum priority a token can be given by the adapter for transmission.

ACF/NCP. Advanced Communication Function for the Network Control Program.

ACF/TCAM. Advanced Communication Function for the Telecommunications Access Method.

ActiveX. A diverse set of technologies using COM.

adapter. A part that electrically or physically connects a device to a computer or to another device.

Advanced Communications Function (ACF). A group of IBM licensed programs, principally VTAM, TCAM, NCP, and SSP, that use the concepts of Systems Network Architecture (SNA), including distribution of function and resource sharing.

Advanced Communication Function for the Telecommunications Access Method (ACF/TCAM). A network host communication program.

Advanced Communication Function for the Network Control Program (ACF/NCP). A network host communication program.

Advanced Communication Function for the Virtual Telecommunications Access Method (ACF/VTAM). A network host communication program.

Advanced Peer-to-Peer Networking (APPN). An extension to SNA featuring (a) greater distributed network control that avoids critical hierarchical dependencies, thereby isolating the effects of single points of failure; (b) dynamic exchange of network topology information to foster ease of connection, reconfiguration, and adaptive route selection; (c) dynamic definition of network resources; and (d) automated resource registration and directory lookup. APPN extends the LU 6.2 peer orientation for end-user services to network control and supports multiple LU types, including LU 2, LU 3, and LU 6.2.

Advanced Peer-to-Peer Networking (APPN) end node. A node that provides a broad range of end-user services and supports sessions between its local control point (CP) and the CP in an adjacent network node. It uses these sessions to dynamically register its resources with the adjacent CP (its network node server), to send and receive directory search requests, and to obtain management services. An APPN end node can also attach to other end nodes.

Advanced Peer-to-Peer Networking (APPN) network. A collection of interconnected network nodes and their client end nodes.

Advanced Peer-to-Peer Networking (APPN) network node. A node that offers a broad range of end-user services and that can provide the following:

- Distributed directory services, including registration of its domain resources to a central directory server
- Topology database exchanges with other APPN network nodes, enabling network nodes throughout the network to select optimal routes for LU-LU sessions based on requested classes of service
- Session services for its local LUs and client end nodes
- Intermediate routing services within an APPN network

Advanced Peer-to-Peer Networking (APPN) node. An APPN network node or an APPN end node.

advanced program-to-program communication (APPC). (1) The general facility characterizing the LU 6.2 architecture and its various implementations in products. (2) Sometimes used to refer to the LU 6.2 architecture and its product implementations as a whole, or to an LU 6.2 product feature in particular, such as an APPC application programming interface.

AID key. A control key that generates a host attention interrupt.

alert. (1) A message sent to a management services focal point in a network to identify a problem or an impending problem. (2) In SNA management services (SNA/MS), a high priority event that warrants immediate attention.

alias name. A name that is defined in one network to represent a logical unit name in another interconnected network. The alias name does not have to be the same as the real name; if these names are not the same, translation is required.

© Copyright IBM Corp. 1989, 1997

American National Standard Code for Information Interchange (ASCII). A character set standard established by the American National Standards Institute, using a set of 7-bit binary-coded characters (8 bits including parity check). ASCII is used for information interchange among data processing systems, data communication systems, and associated equipment. An extended, 8-bit version of this code is used in the personal computer. It consists of control characters and graphic characters in addition to the 7-bit ASCII characters. See also *extended binary-coded decimal interchange code*.

American National Standards Institute (ANSI). An organization consisting of producers, consumers, and general interest groups, that establishes the procedures by which accredited organizations create and maintain voluntary industry standards in the United States. (A)

ANSI. American National Standards Institute.

AnyNet product family. A group of IBM products that implement the multiprotocol transport networking (MPTN) architecture, thus enabling application programs to communicate independently of the underlying network transport protocol.

API. Application programming interface.

APL. A programming language requiring the use of a special keyboard to represent various operator symbols.

APPC. Advanced program-to-program communications.

application. A collection of software components used to perform specific types of user-oriented work on a computer.

application program. (1) A program written for or by a user that applies to the user's work, such as a program that does inventory control or payroll. (2) A program used to connect and communicate with stations in a network, enabling users to perform application-oriented activities.

application programming interface (API). (1) The set of programming language constructs or statements that can be coded in an application program to obtain the specific functions and services provided by an underlying operating system or service program. (2) In VTAM, the language structure used in control blocks so that application programs can reference them and be identified to VTAM.

application transaction program. A program written for or by a user to process the user's application; in an SNA network, a user of a type 6.2 logical unit. Contrast with *service transaction program*.

APPN. Advanced Peer-to-Peer Networking.

APPN end node. See *Advanced Peer-to-Peer Networking (APPN) end node*.

APPN network node. See *Advanced Peer-to-Peer Networking (APPN) network node*.

ASCII (American National Standard Code for Information Interchange). The standard code, using a coded character set consisting of 7-bit coded characters (8 bits including parity check), that is used for information interchange among data processing systems, data communication systems, and associated equipment. The ASCII set consists of control characters and graphic characters. (A)

ASYNC. Asynchronous.

asynchronous (ASYNC). (1) Pertaining to two or more processes that do not depend upon the occurrence of specific events such as common timing signals. (T) (2) Without regular time relationship; unexpected or unpredictable with respect to the execution of program instructions.

Asynchronous Data Link Control (ASYNCH). A discipline for managing asynchronous, serial-by-bit information transfer over a line connection.

asynchronous transmission. A data communication method wherein character strings of variable length are transmitted serially at a variable transmission rate. Each character or defined block of characters has a constant transmission duration.

atom. Represents a character string that has been reduced to a unique integer value.

attention identifier. See *AID key*.

attachment. A communication link used by Personal Communications to connect a personal computer to a host system, consisting of an adapter and controlling software.

audit trail. A history of network activity on a server.

AUTOEXEC.BAT file. In the DOS operating system, a batch file that resides in the root directory of the boot drive. AUTOEXEC.BAT contains commands that DOS executes every time the PC is booted.

automatic access utility. A utility that allows you to create and edit the files that control the automatic-dial, automatic-logon, and modem control programs.

autoskip. A field defined as protected **and** numeric. Causes the cursor to skip to the next unprotected field.

B

backup diskette. A diskette that contains information copied from a Personal Communications diskette.

base-color mode. The mode in which a terminal operates if the host system does not supply color information.

Basic Input/Output System (BIOS). Code that controls basic hardware operations, such as interactions with diskette drives, hard disk drives, and the keyboard.

binary. Pertaining to the base two system of numbers. The binary digits are 0 and 1. Executable files are generally in binary format rather than the character string format that text files are composed of.

BIOS. (1) Basic Input/Output System. (2) See also *NetBIOS*.

bis. A suffix used to designate the second version of a standard, as in ITU-T Recommendation V.25 bis.

bit map. A representation of an image by an array of bits.

C

Caps Lock. The personal computer keyboard mode entered after the **Caps Lock** key is pressed. This mode is indicated by a capital A in the operator information area (OIA). When the **Shift key** is pressed while in this mode, **Caps Lock** is temporarily discontinued and the OIA indicator changes. Pressing the **Shift** key again returns the Caps Lock mode.

character cell. The maximum physical boundary of a character on a display screen.

character set. A finite group of characters defined for a keyboard or output device.

CICS/VS. Customer Information Control System for Virtual Storage.

code page. (1) An assignment of graphic characters and control function meanings to all code points; for example, assignment of characters and meanings to 256 code points for an 8-bit code, assignment of characters and meanings to 128 code points for a 7-bit code. (2) A particular assignment of hexadecimal identifiers to graphic characters.

COM. Component Object Model.

Component Object Model. An architecture developed by Microsoft defining a common paradigm for interaction among software components independent of source language.

Common Programming Interface for Communications (CPI-C). An evolving application programming interface (API), embracing functions to meet the growing demands from different application environments and to achieve openness as an industry standard for communications programming. CPI-C provides access to interprogram services such as (a) sending and receiving data, (b) synchronizing processing between programs, and (c) notifying a partner of errors in the communication.

configuration. (1) The manner in which the hardware and software of an information processing system are organized (2) In Personal Communications, the arrangement of personal computers connected to one or more host systems by one or more attachment types.

configuration file. A file that specifies the characteristics of a system device or network.

continuous carrier. A characteristic of the modem used in an SDLC type of attachment; frequency capable of being modulated or impressed with a second (informative carrier) signal.

control unit. A device that manages the flow of data between personal computers used with Personal Communications and a host system.

conversation. A logical connection between two transaction programs using an LU 6.2 session. Conversations are delimited by brackets to gain exclusive use of a session.

CP. Control point.

CPI-C. Common Programming Interface for Communications.

CP name. A network-qualified name of a control point (CP), consisting of a network ID qualifier identifying the network (or name space) to which the CP's node belongs, and a unique name within the scope of that network ID identifying the CP. Each APPN or LEN node has one CP name, assigned to it at system-definition time.

CSD. Corrective service diskette.

Customer Information Control System for Virtual Storage (CICS/VS). An IBM licensed program that can be used in a communications network.

customization. The process of configuring one or more personal computers connected to a host system by the SDLC, LAN, ASYNCH, X.25, DFT, or other attachment. Customization precedes Personal Communications installation and includes the definition of the sessions to be carried out by Personal Communications.

D

DBCS. Double-byte character set

default. A value, attribute, or option that is assumed when no differing selection is made.

definition file. A file loaded by default that contains keyboard and screen color characteristics that can be adapted for a particular session. The lines of a definition file must be coded according to a strict layout.

delimiter. In the IBM Token-Ring Network, a bit pattern that defines the limits of a frame or token.

dependent LU. See *SSCP-dependent LU*.

dependent LU requester (DLUR). An APPN end node or an APPN network node that owns dependent LUs, but requests that a dependent LU server provide the SSCP services for those dependent LUs.

dependent LU server (DLUS). An APPN network node that provides SSCP services for a dependent LU in its own or another APPN network. Contrast with *dependent LU requester*.

DFT. See *distributed function terminal*.

diacritic key. A key that allows a character to be entered without the cursor position being changed. When you enter an accent mark or a tilde, for example, the cursor does not advance to the next position until you enter the corresponding alphabetic character.

dial-up line. See *switched line*.

direct memory access (DMA). The system facility that allows a device on the Micro Channel bus to get direct access to the system or bus memory without the intervention of the system processor.

distributed function terminal (DFT). A terminal that supports multiple concurrent logical terminal sessions.

distributed function terminal attachment. The connection of a personal computer with an IBM 3174 or 3274 Control Unit using a coaxial cable and software that provides DFT capabilities.

directory. A named hierarchical grouping of files in a file system.

DLUR. Dependent LU requester.

DLUS. Dependent LU server.

DMA. See *direct memory access*.

domain. A set of servers that allocate shared network resources within a single logical system.

DOS session. A session in which a personal computer operates as a stand-alone computer, running under Disk Operating System (DOS). See *host session*.

download. The transfer of a file from a host system to a personal computer.

double-byte character set (DBCS). A set of characters in which each character is represented by 2 bytes. Languages such as Japanese, Chinese, and Korean, which contain more symbols than can be reqpresented by 256 code points, require double-byte character sets. Because each character requires 2 bytes, the typing, display, and printing of DBCS characters requires hardware and programs that support DBCS. Contrast with *single-byte character (SBCS)*.

DRDA. Distributed Relational Database Architecture.

dynamic data exchange (DDE). A protocol that allows applications to exchange data.

E

EBCDIC. See *extended binary-coded decimal interchange code*.

ECF. See *Enhanced Connectivity Facilities*.

EGA. See *enhanced graphics adapter*.

EHLLAPI. See *Emulator High-Level Language Application Programming Interface*.

EIA 232. A standard established by the Electronic Industries Association for direct linkage for serial binary data transfer between a computer and peripheral equipment, such as a modem or printer. See *V.24.*

EMM. See *Expanded Memory Manager*.

EMS. See *Expanded Memory Specification*.

emulator. A program that allows a device to operate as if it were a different type of device. Personal Communications, for example, allows supported personal computers and printers to operate as if they were 3270-series or 5250-series workstations.

Emulator High-Level Language Application Programming Interface (EHLLAPI). A programming interface that permits workstation-based programs to access host computer presentation space.

end node (EN). See *Advanced Peer-to-Peer Networking (APPN) end node* and *low-entry networking (LEN) end node*.

Enhanced Connectivity Facilities (ECF). An IBM communication utility that provides the ability to share resources between workstations and host systems.

enhanced graphics adapter (EGA). An adapter, such as the IBM Enhanced Graphics Adapter, that provides high-resolution graphics, allowing the use of a color display for text processing as well as graphics applications.

EOF. End of Field

EOT. End of Text

error log. A file that stores error information for later access.

Ethernet. A 10-Mbps baseband local area network that allows multiple stations to access the transmission medium at will without prior coordination, avoids contention by using carrier sense and deference, and resolves contention by using collision detection and delayed retransmission. Ethernet uses carrier sense multiple access with collision detection (CSMA/CD).

exit function. A function that allows the user to switch from a host session to a DOS session. The key sequence for exit is **Ctrl+End**.

Expanded Memory Manager (EMM). A standard device driver that manages expanded memory in 16-KB logical pages. The EMM maps a set of logical pages into a page frame using the physical address space that is available in memory above 640 KB, storing the map into conventional memory. The application then accesses the expanded memory thus created as though it were conventional memory.

Expanded Memory Specification (EMS). A specification for accessing memory above the conventional DOS memory address space, 0–640 KB. See *Expanded Memory Manager*, *LIM EMS 3.2*, and *LIM EMS 4.0*.

extended binary-coded decimal interchange code (EBCDIC). The standard code, using a character set consisting of 8-bit coded characters, used by Personal Communications for information interchange between personal computers and a host system. See also *American National Standard Code for Information Interchange*.

extended-color mode. The mode in which a terminal operates if the host system supplies color information.

extended error code. An 8-byte data string returned by **Query System** generated by an internal system error that is used by service personnel for diagnosis.

extended memory. Memory above 1 MB that can be accessed and used by 80286 and 80386** (or greater) CPUs to run applications in protected mode. PC DOS does not normally access memory above 640 KB. This memory is useful only for applications that are written specifically to use extended memory. Successful use of extended memory by an application usually requires the use of an 80386 or greater CPU, which provides machine instructions to handle the use of extended memory.

external resource. A file, directory, or device supplied by a server outside the current domain.

F

field. (1) An area in a record or panel used to contain data. (2) In the IBM 3270 data stream, a group of consecutive positions on a presentation space having similar characteristics that are defined by a field attribute byte at the beginning of the field.

field delimiters. Symbols (often brackets) that indicate the limits of a data entry field.

file mode. In VM/CMS, the third field of the file identifier, which indicates the assigned virtual disk wherein the file resides.

file type. In VM/CMS, the second field of the file identifier. The file type can be arbitrary, or of significance to the system (for example, SCRIPT, LIST3270, and NOTEBOOK file types).

fixed disk. See *hard disk*.

flag. A character or bit sequence that marks an occurrence or boundary, such as the end of a word or the beginning or end of a data transmission block.

frame. A data structure (data frame) composed of fields meeting the field specifications of a type of communication protocol. Frames are used to control data transfer across a data link.

In SDLC, a frame is a sequence of bits delimited by an opening and closing flag. In X.25 packet switching data networks, frames are composed of 8-bit byte sequences delimited by beginning and ending flags; the frames in X.25 control various functions, data transfer, and transmission checking.

G

gateway. A station in a local area network through which a connection to a host system or a separate network is established.

gateway status utility. A utility that allows a user to check the status of sessions in a gateway network.

GDDM. See *Graphical Data Display Manager*.

GDDM-PCLK. A personal computer application program that supports host GDDM graphics applications. This application requires an LLAPI interface for PC/3270.

Graphical Data Display Manager (GDDM). An IBM host function that processes text and graphics for output to a display, printer, or graphic output device.

H

hard disk. A rigid-magnetic disk such as the internal disks used in the system units of personal computers and in external hard disk drives (also known as fixed disks).

High-Level Language Application Programming Interface (HLLAPI). A software product that supports interaction between a host program and an application program running on a personal computer in terminal emulation (usually 3270 terminal emulation).

High-Performance Routing (HPR). An addition to APPN that enhances data-routing performance and session reliability.

HLLAPI. See *High-Level Language Application Programming Interface*.

host address. A LAN address used by the host controller.

host code page. The character code page used by the host system to which a gateway connects.

host print. A printer session on a local personal computer directed by the host system.

host profile. A configuration profile that identifies a gateway by name, and establishes LU addresses and types for connected logical units.

host session. A logical connection that enables a personal computer to communicate with a host system. A session can be identified by LU address, LT number, or session ID. See *DOS session*. See also *logical terminal*.

host short name. See *short name*.

host system. In Personal Communications, the computer linked to one or more personal computers by the SDLC, LAN, ASYNCH, X.25, or DFT attachment.

hot key. A keystroke or keystroke combination that initiates the hotkey function. See *hotkey function*.

hotkey function. A function that allows you to switch to the next logical terminal or DOS, on whichever screen it last appeared, without exiting the current application.

HPR. High-Performance Routing.

I

IBM PC Network. A local area network providing peer-to-peer communication among IBM personal computers, allowing them to share resources. It utilizes carrier sense multiple access/collision detect (CSMA/CD) protocol and supports a data transmission rate of 2 million bits per second. Broadband and baseband versions are available.

IBM Token-Ring Network. A general-purpose baseband token-ring local area network for interconnecting information processing equipment at a local site. It uses a token-ring access protocol and supports a data rate of either 4 or 16 million bits per second. It conforms to the IEEE 802.5 (token-ring) and IEEE 802.2 (logical link control) standards.

IBM NCP Packet Switching Interface Program (NPSI). A network host communication product that runs in an IBM 3745 communications controller and enables it to connect to an ITU-TS X.25 recommendation packet-switching data network.

idles. In a token-ring network, the signals sent when neither frames nor tokens are being transmitted.

IEEE. See *Institute of Electrical and Electronics Engineers*.

IEEE 802.2. An IEEE standard for logical link control in local area networks.

initial program load (IPL). The initialization procedure that starts an operating system, or the process of loading programs and preparing a system to run jobs.

installation. In Personal Communications, the process of loading microcode from the Personal Communicationsdiskettes.

Institute of Electrical and Electronics Engineers (IEEE). An organization that establishes and promotes standards in related industries.

integrated services digital network. A digital end-to-end telecommunication network that supports multiple services including, but not limited to, voice and data.

interleave. In Personal Communications, to arrange parts of a transmission sequence so that they are interspersed with parts of one or more other transmission sequences of the same nature, with each sequence retaining distinct meaning and identity. See

also *packet-switching data network* and *X.25 Recommendation*.

International Telecommunication Union (ITU). The specialized telecommunication agency of the United Nations, established to provide standardized communication procedures and practices, including frequency allocation and radio regulations worldwide.

interrupt level. A number assigned to an interrupt to indicate priority. The interrupt with the lowest number has the highest priority.

IPL. See *initial program load*.

ISDN. Integrated services digital network.

ITU-TS. See *ITU-T*.

ITU-T. International Telecommunication Union - Telecommunication Standardization Sector. The part of the International Telecommunication Union (ITU) that is reponsible for developing recommendations for telecommunications. (Formerly known as the CCITT.)

J

jump. To start the jump function.

jump function. A switch to the logical terminal session specified.

K

key assignment. The character, numeral, symbol, or function generated when a keyboard key is pressed. All keys have default assignments that can be customized.

keyboard definition. Definitions of keyboard keys as stored on one of the Personal Communications diskettes.

keyboard template. An overlay placed on a keyboard to explain the function of each key.

L

LAN. See *local area network*.

leased line. See *nonswitched line*.

LEN. Low-entry networking.

LEN node. A node that supports independent LU protocols but does not support CP-CP sessions. It may be a peripheral node attached to a boundary node in a subarea network, an end node attached to an APPN network node in an APPN network, or a peer-connected node directly attached to another LEN node or APPN end node. See also *low-entry networking (LEN) end node*.

LIM EMS 3.2. An expanded memory specification agreed to in 1984 by the computer software manufacturers Lotus**, Intel**, and Microsoft** to access memory above the DOS conventional memory area, 0–640 KB, using an EMM device driver. LIM EMS 3.2 allows an application to store up to 8 MB of data in expanded memory, in 512 logical pages of 16 KB. The EMS 3.2 expanded memory manager maps up to 64 KB of expanded memory in the PC BIOS memory area. See also *LIM EMS 4.0* and *Expanded Memory Manager*.

LIM EMS 4.0. An extended expanded memory specification (EEMS) pioneered by AST** Research Corporation as an extension to LIM EMS 3.2 to permit expanded memory to be used for directly executing programs through multitasking, and to expand the areas accessible for mapping expanded memory beyond the conventional memory barrier, up to 1024 KB. The EEMS was further improved and defined by agreement of Lotus, Intel, and Microsoft corporations to better support windowing and multitasking operating environments. With appropriate hardware support, LIM EMS 4.0 supports up to 32 MB of expanded memory. Its EMM can create page frames up to 896 KB, and up to 2048 logical pages of 16-KB memory.

line speed. The speed at which data is transferred over an analog (telephone) line. Line speeds depend on the quality of the line.

local area network (LAN). (1) A computer network located on a user's premises within a limited geographical area. Communication within a local area network is not subject to external regulations; however, communication across the LAN boundary may be subject to some form of regulation. (T) (2) A network in which a set of devices are connected to one another for communication and that can be connected to a larger network. (3) See also *Ethernet* and *token ring*.

local copy. A printer session initiated by a personal computer user or host that reproduces a presentation space with all supported graphics.

local LU. A logical unit not distributed over the LAN, but controlled by a gateway personal computer. This is normally a physical device such as a workstation, printer, or terminal.

logical terminal (LT). (1) A terminal with a name related to one or more physical terminals. (2) The definition of a specific 3270 terminal emulation session. See also *host session*.

logical terminal ID. See *logical terminal identifier*.

logical terminal identifier (LT ID). An identifier for the LU type specified in the gateway host profile. In Personal Communications, up to 8 (unchangeable) IDs can be displayed. See *session ID*.

logical terminal number. A number used to identify DFT host sessions. A 3270 control unit controls some number of sessions with the host. The control unit then assigns from 1 to 5 of these sessions to a particular coaxial connection and assigns each session an LT number from 1 to 5.

logical unit (LU). A type of network accessible unit that enables users to gain access to network resources and communicate with each other.

logon. The process of accessing a domain and assuming a user ID.

LT. See *logical terminal*.

LU. Logical unit.

LU 2. A type of LU for an application program that communicates with a single display workstation in an interactive environment, using the SNA 3270 data stream.

LU 3. A type of LU for an application program that communicates with a single printer, using the SNA 3270 data stream.

LU 6.2. A type of LU that supports sessions between two applications in a distributed data processing environment using the SNA general data stream, which is a structured-field data stream, or a user-defined data stream.

LU address. In Personal Communications, a number from 02 to 254 assigned by the host to represent the remote partner in an SNA session.

M

MAN. Metropolitan area network.

mantissa. The decimal part of a common logarithm.

mark. A symbol or sequence of symbols that indicate the beginning or end of a field, word, data item, or data set.

menu. A list of available operations. You select which operation you want from the list.

messaging name. A name under which messages can be received.

metropolitan area network (MAN). A network formed by the interconnection of two or more networks which may operate at higher speed than those networks, may cross administrative boundaries, and may use multiple access methods. (T) Contrast with *local area network (LAN)* and *wide area network (WAN)*.

modem. A serial data translator that converts digital signals into analog signals at transmission, and on reception, converts analog signals back into digital signals. Modems are used primarily for telephonic computer communication. Synonymous with modulator/demodulator.

multiplexer (mux). A device capable of interleaving events of two or more activities, or of spreading the events of an interleaved sequence of the multiple activities.

mux. See *multiplexer*.

MVS. See *Operating System/Virtual Storage Version 2*.

N

NA. Not applicable. When this appears in a calling parameter position, it means that PC400 EHLLAPI does not require this parameter to perform the specific function.

NCB. See *network control block*.

netID. See *network identifier*.

NetBIOS. Network Basic Input/Output System. In Personal Communications, an interface for application programs (API) between a LAN adapter and a token-ring network.

netname. The name used to identify a shared resource on the network.

network. (1) An arrangement of nodes and connecting branches. (T) (2) A configuration of data processing devices and software connected for information interchange. (3) A group of nodes and the links interconnecting them.

network accessible unit (NAU). A logical unit (LU), physical unit (PU), control point (CP), or system services control point (SSCP). It is the origin or the destination of information transmitted by the path control network. Synonymous with *network addressable unit*.

network address. (1) According to ISO 7498-3, a name, unambiguous within the OSI environment, that identifies a set of network service access points. (2) In a subarea network, an address, consisting of subarea and element fields, that identifies a link, link station, physical unit, logical unit, or system services control point. Subarea nodes use network addresses; peripheral nodes use local addresses or local-form

session identifiers (LFSIDs). The boundary function in the subarea node to which a peripheral node is attached transforms local addresses or LFSIDs to network addresses and vice versa. Contrast with *network name*.

network addressable unit (NAU). Synonym for *network accessible unit*.

network administrator. A person who manages the use and maintenance of a network.

network application program. In the IBM Token-Ring Network, a program used to connect and communicate with adapters on a network, enabling users to perform application-oriented activities and to run other application programs.

network control block (NCB). A part of the network control program that controls the resources used by the communication network in a LAN attachment.

network name. The symbolic identifier by which users refer to a network accessible unit, a link, or a link station within a given subnetwork. In APPN networks, network names are also used for routing purposes. Contrast with *network address*.

network node (NN). See *Advanced Peer-to-Peer Networking (APPN) network node*.

network node server. An APPN network node that provides network services for its local LUs and client end nodes.

node. (1) In a network, a point at which one or more functional units connect channels or data circuits. (I) (2) Any device, attached to a network, that transmits and receives data. (3) An endpoint of a link or a junction common to two or more links in a network. Nodes can be processors, communication controllers, cluster controllers, or terminals. Nodes can vary in routing and other functional capabilities.

non-return-to-zero inverted encoding (NRZI). A data encoding method that ensures correct synchronization of information in an analog data stream transmission.

nonswitched line. A communication line (such as is used in the SDLC attachment) that is permanently connected and does not require dialing to establish communication. Contrast with *switched line*.

NPSI. See *IBM NCP Packet Switching Interface Program*.

NRZI. See *non-return-to-zero inverted encoding*.

NUL. A transmission control character used as a filler or for sequence control in network communication.

Num Lock. The keyboard mode entered after the **Num Lock** key is pressed. When the **Shift** key is pressed while in this mode, Num Lock is temporarily discontinued.

O

ODBC. Open Data Base Connectivity. An interface that allows applications to access data from many sources using Structured Query Language (SQL) as a standard for accessing data.

OIA. See *operator information area*.

OIA indicator. Characters or symbols in the operator information area providing information about network, workstation, gateway, or interface status. See also *operator information area*.

operator information area (OIA). The bottom line of a session window that shows information on status and Personal Communications connections.

OLE. Object Linking and Embedding; OLE is a COM-based technology that allows for the creation of compound documents.

Operating System/Virtual Storage Version 2 (OS/VS2). A set of commands, subcommands, and operands recognized by the host computer. Synonymous with MVS.

P

packet. A discrete unit of information including addressing and sequence information that can be sent interleaved with other packets of the same and other transmission sequences. Packets sent over X.25 virtual circuits always follow the same route and arrive in the order they were sent.

packet assembler/disassembler (PAD). A functional unit that enables data terminal equipment (DTEs) not equipped with an X.25 interface to use a packet-switching data network. On the most common PAD, data from ASCII start/stop DTEs is tranformed to and from X.25 packets. See also *packet*, *packet-switching data network*.

packet-switching data network (PSDN). A data transmission system consisting of one or more host systems and one or more network stations that communicates using packets of information. The data is sent in interleaved packets to distribute the flow of information and maximize the data transmission capabilities of the network. X.25 is a packet-switching data network communication protocol. See *X.25 network*.

PAD. See *packet assembler/disassembler*.

parity bit. A binary digit appended to a group of binary digits as needed to make the sum of all the digits either odd (odd parity) or even (even parity).

PC Network. See *IBM PC network*.

PCSDIAL. A program that automatically dials a host number, permitting a fast connection.

permanent virtual circuit (PVC). An X.25 virtual circuit that is permanently established (by subscription) and, therefore, needs no call-establishment protocol. Contrast with *switched virtual circuit*.

physical unit (PU). The component that manages and monitors the resources (such as attached links and adjacent link stations) associated with a node, as requested by an SSCP via an SSCP-PU session. An SSCP activates a session with the physical unit in order to indirectly manage, through the PU, resources of the node such as attached links. This term applies to type 2.0, type 4, and type 5 nodes only.

physical unit identifier (PUID). In the gateway status utility, five hexadecimal digits used to identify the network station to the gateway.

PIU. Path information unit.

pooled LUs. Logical units that share host sessions in a common pool to save system resources.

POR. See *power-on reset function*.

port number. In DFT attachment, the logical ports assigned to a terminal by a control unit.

power-on reset (POR) function. A function that allows the user to reset all logical terminals. The key sequence for POR is **Ctrl+Pause** using the Enhanced or Space Saving keyboards. Otherwise, the sequence is **Ctrl+F2**.

preallocated LUs. Logical units only available to a specified network station.

presentation space. The host display space for the window.

presentation space position parameter. One of the four parameters that you must specify for some EHLLAPI functions. A position in the presentation space from 1 to 3564.

printer utility. A utility that allows users to check the status of the printers in their network.

private application. An application maintained for use only on one computer or user, that is not available on the network for other users.

program operator. The EHLLAPI program that performs and monitors activities in a workstation presentation space.

programmed symbol set (PS). A set of fonts that can be system-defined or defined by the user and to which a code can be assigned.

protected field. A field that holds data for viewing; the data cannot be changed (at the current screen) by the user.

protocol. A specification for the format and timing of data exchanged between communicating systems. Also, the set of rules governing the operation of units of the communication system to facilitate communication.

PSDN. See *packet-switching data network*.

PSID. Presentation Space Identifier; a short one-character or one-letter name of the presentation space.

PU. Physical unit. See also *physical unit identifier*.

public application. An application shared among users on a network.

PUID. See *physical unit identifier*.

PVC. See *permanent virtual circuit*.

Q

queue. A list of pending tasks for a computer or server to execute in order.

R

redefinition file. See *definition file*.

request. A message unit that signals initiation of a particular action or protocol. For example, Initiate-Self is a request for activation of an LU-LU session.

requester. A computer that accesses shared network resources through a server.

resource. A directory (files resource) or device used by computers on a network.

response time monitor. A function that measures and displays the host response time

RS-232C. See *EIA 232* and *V.24.*

RSAP. Remote service access point. See *service access point*.

run book. A supplemental guide, controlled by a system administrator, that describes the implementation and usage of a specific system configuration.

S

SAP. See *service access point*.

SAS. See *session active screen*.

SBCS. See *single-byte character set*.

SDLC. See *Synchronous Data Link Control*.

SDLC command. The control information in the C-field of the link header, sent from a primary station to a secondary station.

Server-Requester Programming Interface (SRPI). An IBM application programming interface (API) used by requester and server programs to communicate with the personal computer or host routers.

service access point (SAP). The gateway address of the controller. An SAP provides a point to link the controller to the host system.

service coordinator. The person in your organization responsible for answering hardware and software computing questions.

service transaction program. Any IBM-supplied transaction program running in a network accessible unit. Contrast with *application transaction program*.

session. (1) A logical connection between a server and a requester that was initiated by a successful request for a shared resource. See also *host session* and *DOS session*. (2) A logical connection between two network addressable units that can be activated, tailored to provide various protocols, and deactivated, as requested.

session active screen (SAS). The display that is active for the current communication session. See also *next-session-active-screen function.*

session ID. An alphabetic ID (*a* through *h*) assigned by Personal Communications to each session or screen. This applies to all types of host sessions and is used in file transfers. See also *short name*.

shared resource. A directory or device made available to users on a network. A shared resource is attached to a server, but it is not attached to the requesters that use them.

Shift Lock. The personal computer keyboard mode entered after the **Shift Lock** key is pressed. In this mode, the keyboard performs the function printed on the upper half of the keytop. Press the **Shift** key to cancel the Shift Lock mode.

short name. In Personal Communications, a character displayed in column 7 of the operator information area that shows the session ID. See also *session ID* and *operator information area*.

single-byte character set. A character set in which each character is represented by a one-byte code.

SMS Install. The Microsoft Systems Management Server (SMS) product provides for the remote installation and uninstallation of Personal Communications.

SNA. See *Systems Network Architecture*.

SNA network. The part of a user-application network that conforms to the formats and protocols of Systems Network Architecture. It enables reliable transfer of data among users and provides protocols for controlling the resources of various network configurations. The SNA network consists of network accessible units (NAUs), boundary function, gateway function, and intermediate session routing function components; and the transport network.

Sockets over SNA. The AnyNet Sockets over SNA access node function of Personal Communications enables TCP/IP application programs using the WinSock interface to communicate over an SNA network.

source diskette. In a diskette copying procedure, the diskette from which information is read.

SRPI. Server-Requester Programming Interface.

SSCP. System services control point.

SSCP-dependent LU. An LU that requires assistance from a system services control point (SSCP) in order to initiate an LU-LU session. It requires an SSCP-LU session.

SVC. See *switched virtual circuit*.

switched line. A telecommunication line in which the connection is established by dialing. See also *switched virtual circuit*. Contrast with *nonswitched line*.

switched virtual circuit (SVC). An X.25 virtual circuit that is dynamically established when needed. The X.25 equivalent of a switched line. Also known as a virtual call. Contrast with *permanent virtual circuit (PVC)*.

switch-screen function. A function that switches keyboard control to the other screen, if two screens are used. The key sequence for switch-screen is **Alt+Tab**.

Synchronous Data Link Control (SDLC). A discipline for managing synchronous, code-transparent, serial-by-bit information transfer over a line connection. Transmission exchanges can be duplex (in both directions at the same time) or half-duplex (in either direction, one direction at a time) over switched lines or direct lines.

system services control point (SSCP). A component within a subarea network for managing the configuration, coordinating network operator and problem determination requests, and providing directory services and other session services for users of the network. Multiple SSCPs, cooperating as peers with one another, can divide the network into domains of control, with each SSCP having a hierarchical control relationship to the physical units and logical units within its own domain.

Systems Network Architecture (SNA). The description of the logical structure, formats, protocols, and operational sequences for transmitting information units through, and controlling the configuration and operation of, networks. The layered structure of SNA allows the ultimate origins and destinations of information, that is, the users, to be independent of and unaffected by the specific SNA network services and facilities used for information exchange.

T

target diskette. In a diskette or storage copying procedure, the diskette onto which information is written.

template. See *keyboard template*.

terminal emulator. See *emulator*.

terminal operator. The human user of a EHLLAPI application program. Contrast with *program operator*.

Time Sharing Option (TSO). A set of commands, subcommands, and operands recognized by the host computer.

token ring. (1) According to IEEE 802.5, network technology that controls media access by passing a token (special packet or frame) between media-attached stations. (2) A FDDI or IEEE 802.5 network with a ring topology that passes tokens from one attaching ring station (node) to another. (3) See also *local area network (LAN)*.

token-ring network. (1) A ring network that allows unidirectional data transmission between data stations, by a token passing procedure, such that the transmitted data return to the transmitting station. (T) (2) A network that uses a ring topology, in which tokens are passed in a circuit from node to node. A node that is ready to send can capture the token and insert data for transmission.

trace size. See *trace table*.

trace table. A storage area that contains the records of all Personal Communications operations. The trace information can either be directed to the standard output destination, or it can be redirected to a file.

transaction program (TP). A program that processes transactions in an SNA network. There are two kinds of transaction programs: application transaction programs and service transaction programs. See also *conversation*.

transferring files. Sending files from a personal computer to a host system or vice versa. See *download* and *upload*.

TSO. See *Time Sharing Option*.

U

UID. See *user identifier*.

unprotected field. A field that is available for the user to enter or modify data.

upload. The transfer of a file from a personal computer to a host system.

user ID. See *user identifier*.

user identifier (UID). A name that uniquely identifies a user on a network or system.

user profile. A file containing values for setting up the user environment, and that can be automatically accessed when a user logs on.

utility programs. Programs that support operations of Personal Communications, such as file transfer and keyboard redefinitions.

V

V.24. An ITU-T recommendation that defines interchange circuits between data terminal equipment (DTE) and data circuit-terminating equipment (DCE). When combined with the specification of electrical characteristics given in ITU-T recommendation V.28, it specifies a modem interface for data rates below 20 kilobits per second (which is equivalent to EIA 232).

V.35. An ITU-T recommendation that defines interchange circuits and electrical characteristics between data terminal equipment (DTE) and data circuit-terminating equipment (DCE) at various data rates. Originally defined for wideband modems, but now commonly used for various data network services.

valid key. A key that is recognized by the host session.

VB Scripting. An interface used with Personal Communications to define and execute Visual Basic scripts.

VGA. See *video graphics adapter*.

video graphics adapter (VGA). A computer adapter that provides high-resolution graphics and a total of 256 colors. See also *enhanced graphics adapter (EGA)*.

virtual machine (VM). A time sharing control program.

VM. See *virtual machine*.

VM/CMS. See *Virtual Machine/Conversational Monitoring System*.

Virtual Machine/Conversational Monitoring System (VM/CMS). A time sharing system control program that manages the resources of an IBM System/370 such that multiple remote terminal users have a functioning simulation of a computing system at their disposal. The Conversational Monitoring System provides general time sharing, development, and problem-solving facilities.

Virtual Telecommunications Access Method (VTAM). A host program for communication using switched lines. See also *switched line*.

virtual route (VR). In SNA, either (a) a logical connection between two subarea nodes that is physically realized as a particular explicit route or (b) a logical connection that is contained wholly within a subarea node for intranode sessions. See also *Systems Network Architecture.*

VR. See *virtual route*.

VS. Virtual storage.

VT terminal. A series of general purpose ASCII terminals that were introduced by Digital Equipment Company.

VTAM. See *Virtual Telecommunications Access Method*.

W

WAN. See *wide area network*.

wide area network (WAN). (1) A network that provides communication services to a geographic area larger than that served by a local area network or a metropolitan area network, and that may use or provide public communication facilities. (T) (2) A data communication network designed to serve an area of hundreds or thousands of miles; for example, public and private packet-switching networks, and national telephone networks. (3) Contrast with *local area network (LAN)* and *metropolitan area network (MAN)*.

X

X.21. An ITU-T recommendation for a general-purpose interface between data terminal equipment and data circuit-terminating equipment for synchronous operation on a public data network.

X.25 network. A packet-switching data network linked in accordance with ITU-T recommendation X.25.

X.25 Recommendation. An ITU-T recommendation for the interface between data terminal equipment and packet-switched data networks.

X.400. The message-handling services standard of ITU-T and ISO.

XID. SNA exchange identification command. See also *Systems Network Architecture*.

Numbers

3270 numeric field. A display field that accepts only numerics (0–9), a minus sign, a period, a comma, and DUP keyboard entries.

Index

Numerics

3174 Peer Communication 15
32-bit ODBC Administrator 6
3270 Emulation Credit Card 102
3270 passthru 108
3270 session screen printing 54
5250 (over API Client) Attachment 163
5250 Twinax adapters 16

A

ActiveX 12, 14
adapter/modem, IBM SDLC PCMCIA 16
adapters
  3270 Emulation Credit Card 102
  attachments 38
  coax
    AT-Bus 115
    Micro Channel 115
    PCMCIA 115
  Ethernet 103
  OEM 116
  preventing conflicts 106
  SDLC 106
  Token-Ring 103
  twinax
    AT-Bus 116
    Micro Channel 116
Advantis (IIN) 107
AFTP (file transfer) 6
AnyNet 15
  AnyNet examples 139
  functions 12
  removing previous versions 32
AnyNet SNA over TCP/IP protocol 23
API Client 163
API Client Attachments 163
APING (check connection) 6
APIs, Communications 23
APPC 15
APPC communications protocol 11
APPC3270 Attachment 163
appearance 64
APPN network protocol 10
AS/400
  3270 passthru 108
  5250 sessions through one link 120
  configuration examples 119
  device description
    for asynchronous attachments 123
    for twinaxial attachment 122
AS/400 *(continued)*
  error messages 109
  PC400 configuration 120
  system mode description 121
  system setup 109
ASCII host file transfer 14
ASCII SNA configuration files 17
asynchronous attachment, AS/400 device description 123
asynchronous console 16
AUTOEXEC file 23
automatically starting sessions 50
autorun 26

B

Backup Server/Host Connection 16
batch file
  editing 49
  i option 48
  q option 48
  s option 48
  using 46

C

CFGWIZ 32
changing
  configuration files 40
  workstation profiles 40
character sequences, unsupported 108
Client Support, CS/NT 16
Client Support, NetWare 16
client/server applications
  enabling 85
  support for 10
CM Mouse 6
CMS file printing 54
coax adapters 115
coax attachment, considerations 101
code pages 17
color mapping 64
communication check 50x 108
Communications APIs 23
communications protocols
  APPC 11
  LU 6.2 11
Communications Server for NT 163
Communications Server for NT Client 163
configuration
  changing
    SNA 40
    workstation profiles 41

© Copyright IBM Corp. 1989, 1997

configuration *(continued)*
creating 37
default 39, 85
icon 4
information 119
saving
SNA 39
workstation profiles 39
configuring
an emulator session 37
AS/400 119
PC400 119
SNA nodes 85
conflicts, preventing 106
connection
checking 6
considerations and restrictions
Advantis (IIN) 107
attachment via AS/400 system 108
coax attachment 101
Home3270 108
IBM Global Network Connection 107
LAN via IEEE 802.2 102
SDLC 105
TCP/IP attachment 103
ZipPrint 55
contacting IBM 91
conventions used in this book ix
copying
data in cells as text data 58
lines containing only operational signs 58
marked data 58
table data to spreadsheet 57
copylink 57
CP name 31
CPI-C 15
creating
a macro 71
a script 72
the AS/400 system mode description 121
CS/NT Client Support 16
customizing the menu bar 6

D

data compression, SNA 17
Data Transfer
description 75
icon 6
types of 76
database access tool 6, 15
DDE/EHLLAPI 57
default key functions
combined package 157
PC/3270 package 153
PC400 package 155
default key functions *(continued)*
VT220 package 158
defects
submitting by FAX 92
submitting by mail 92
submitting electronically 93
dependent LU requester (DLUR) 11
dependent LU server 11
desktop 45
developer's assistance program 95
device description
AS/400 119
for asynchronous attachments 123
for twinaxial attachments (APPC) 122
DFT attachment, functions not available 102
directories created during installation 99
diskette images 30
DLUR (dependent LU requester) 11
DOS EHLLAPI 7, 15
DRDA (distributed relational database architecture) 15

E

edit-function restrictions with Home3270 attachment 59
EHLLAPI 7, 15
Emulator Class Library 15
emulator sessions
configuring 37
exiting 51
starting 45
stopping 51
enabling
client/server applications 85
DDE/EHLLAPI 57
end node 85
error messages from the AS/400 system 109
existing batch file 49
exiting sessions 51

F

file transfer 6, 14, 62
Folders, Shared 16
fonts 64
FTP 6
functions not available with DFT attachment 102

G

Global Network 107
graphics, programmed symbol set 17

H

Hayes AutoSync communication mode 16

hiding
the menu bar 65
the tool bar 65
windows 73
high-performance routing (HPR) 11
Home3270 108
hotspots 17, 67
how to
configure Personal Communications 37
install Personal Communications 23
perform communication check 50x 108
HPR (high-performance routing) 11

I

i option 48
IBM Global Network Connection considerations 107
IBM SDLC PCMCIA adapter/modem 16
IBM service 91
icons, Personal Communications 4
IEEE 802.2 driver, unattended installation 17
IEEE 802.2 protocol 23
IIN 107
installation of Personal Communications
diskette images 30
from a network server 28
migration 30
on a network server 29
onto a workstation 27
options and considerations 23
removal 33
Silent 35
installation planning 21
Internet Service on URL 94
Internet/Intranet hotspots 17
ISDN 16

K

key functions
assignments 153, 158
default 153, 155, 158, 159
description 66
keyboard
file 68
functions 66, 155
setup 68

L

LAN adapter considerations 102
LAN over COAX 15
LAN via IEEE 802.2 attachment 102
licensing agreement 165
line speed
Advantis (IIN) attachment 107
line speed *(continued)*
Home3270 attachment 108
SDLC attachment 105
Lotus scripts 15
LU 0, 1, 2, 3 via WinRUI Attachment 163
LU 6.2 communications protocol 11

M

machine check 207 101
macro
description 71
functions 66
statements 72
usage 71
memory requirements
for Personal Communications 21
for Windows 95 22
for Windows NT 22
menu bar
customizing 6
messages
OIA 90
page fault 89
Microsoft SNA Client 24
migrating 32
mouse
file 70
setup 70
mouse buttons 6
MSDLC protocol 33
multiple operating systems 25
multiple sessions 6, 46

N

NetID, SNA network 31
NetWare Client Support 16
NetWare for SAA 25
NetWare for SAA Client 22
NetWare for SAA Client (SNA) 163
Netware, Novell 25
network
installing diskette images 30
installing from 28
installing on 29
Network Drives 16, 82
Assigning 82
Setting up 82
network protocols
APPN 10
NLS language installations 24
Novell Netware 25

O

object-oriented API 13
ODBC (open data base connectivity) 15
ODBC Administrator 6
OEM adapter 116
OfficeVision 54
OIA messages 89
OLE 2.0 12, 14
online help 89
operating systems, multiple 25
Organizer, PC 79

P

passthru 108
pastelink 57
pausing macro recording 73
PC Location Name 31
PC Organizer 79
PCMCIA adapter/modem, IBM SDLC 16
PCMCIA configuration 102
PCOMM cforum 95
PCSWS.EXE 46
  options 48
PDT files 53
Peer Communication, 3174 15
Personal Communications
  directories 99
  functions 7
  icons 4
  installing 26
  library 90
  overview 7
  program folder 4
  removing 33
  requirements 21
  subdirectories 99
ping 6
pop-up keypad 70
  (poppad) file 70
  setup 69
poppad color 70
print screen 53
printer definition
  file 53
  table 53
printing
  description 53
  function 54
  PROFS/OV note, calendar, document 54
  ZipPrint 6, 54
private subdirectory 28, 99
processing environment 21
PROFS/OV note, calendar, document printing 54
programmed symbol set graphics 17
protocols
  X.25 16

Q

q option 48
quit macro recording select 73

R

receiving data from the host 76
related publications 90
removing Personal Communications 33
requirements
  hardware 21
  software 22
  storage 21
  workstation 21
response time monitor 24
REXX 15
run Personal Communications from a server 28, 29
running
  copylink 57
  pastelink 57

S

s option 48
S/3X (Twinax) 16
sample 120
  AS/400 device description for twinaxial attachment 122
  AS/400 device descriptions for asynchronous attachments 123
saving
  configuration information 39
  keyboard layout 68
script functions 66
SDLC attachment
  considerations 105
  performance consideration 105
SDLC PCMCIA adapter/modem 16
SDLC protocol 23
sending data to the host 76
Server/Host Connection, Backup 16
service, statement 91
sessions
  automatically starting 50
  configuring 4, 37
  exiting 51
  icons for 37, 45
  IDs for 48
  multiple 46
  starting 45
  starting specific session ID 48

sessions *(continued)*
  stopping 51
  window 45
setting up
  a macro 72
  a window's appearance 64
  the mouse 70
  the pop-up keypad 70
Shared Folders 16, 82
  Assigning 82
  Setting Up 82
sharing system resources with MPA 106
showing
  the menu bar 65
  the tool bar 65
  windows 73
SMS (Systems Management Server) 17
SNA
  node configuration 37
SNA Client, Microsoft 24
SNA data compression 17
SNA network NetID 31
SNA node
  configuration 4, 85
  operations 4
  starting 86
  stopping 86
SNA over TCP/IP 15
SNA-over-Async protocol 23
Sockets over SNA 15
software requirements 22
Software Solutions Center 95
spreadsheet, copying table data 57
SQL 15
starting
  configuration setup 37
  from the session window 46
  macro playing 73
  multiple sessions 46
  sessions 45
  SNA nodes 86
  with a batch program 46
  workstation profiles from the Start menu 46
stopping
  macro playing 73
  sessions 51
  SNA nodes 86
storage requirements 21
subdirectories
  PDFPDT 100
  private 28, 99
  samples 99
submitting defects
  electronically 93
  FAX 92
  mail 92
system files
  CONFIG.SYS 32
  SYSTEM.INI 32
  WIN.INI 32
Systems Management Server (SMS) 17

T

TCP/IP
  connection considerations 103
  protocol driver 103
technical assistance 91
Telnet 16
Text Assist 80
text conventions ix
Thai Language 161
TMP environment variable 23
TN5250 over IPX/SPX socket 16
tool bar
  setup 65
trace functions 4
trademarks 167
transferring
  data 75
  files 62
trim print 53
twinax
  adapters, using 116
  attachment, AS/400 device description 122
  console attachment 16
Twinax adapters 16
types of
  hotspots 68
  sessions 7

U

uninstalling Personal Communications 5, 33
unsupported character sequences 108

V

Visual Basic (VB) scripting 15
VT 23
VT emulation 14

W

WAC (wide area connector) 16
window
  appearance 64
  setup 64
  view 73
Windows printer driver 53
WinSock 3, 12
workstation profile 39, 46

workstations supported by Personal Communications 21

X

X.25 16
XEDIT work-space printing 54

Z

ZipPrint 6, 54

Communicating Your Comments to IBM

eNetwork Personal Communications
Version 4.2
for Windows 95 and Windows NT
Quick Beginnings

Publication No. GC31-8476-00

If you especially like or dislike anything about this book, please use one of the methods listed below to send your comments to IBM. Whichever method you choose, make sure you send your name, address, and telephone number if you would like a reply.

Feel free to comment on specific errors or omissions, accuracy, organization, subject matter, or completeness of this book. However, the comments you send should pertain to only the information in this manual and the way in which the information is presented. To request additional publications, or to ask questions or make comments about the functions of IBM products or systems, you should talk to your IBM representative or to your IBM authorized remarketer.

When you send comments to IBM, you grant IBM a nonexclusive right to use or distribute your comments in any way it believes appropriate without incurring any obligation to you.

If you are mailing a readers' comment form (RCF) from a country other than the United States, you can give the RCF to the local IBM branch office or IBM representative for postage-paid mailing.

If you prefer to send comments by mail, use the RCF at the back of this book.

If you prefer to send comments by FAX, use this number:

United States and Canada: **1-800-227-5088**

If you prefer to send comments electronically, use this network ID:

- IBM Mail Exchange: **USIB2HPD at IBMMAIL**
- IBMLink: **CIBMORCF at RALVM13**
- Internet: **USIB2HPD@VNET.IBM.COM**

Make sure to include the following in your note:

Title and publication number of this book
Page number or topic to which your comment applies.

Help us help you!

eNetwork Personal Communications
Version 4.2
for Windows 95 and Windows NT
Quick Beginnings

Publication No. GC31-8476-00

If your concern is service related, you can reach Service at 1-800-992-4777 in the United States. Outside the United States, please check your phone listing for the IBM Service Center nearest you.

We hope you find this publication useful, readable and technically accurate, but only you can tell us! Please take a few minutes to let us know what you think by completing this form.

Overall, how satisfied are you with the information in this book?	Satisfied	Dissatisfied

How satisfied are you that the information in this book is:	Satisfied	Dissatisfied
Accurate		
Complete		
Easy to find		
Easy to understand		
Well organized		
Applicable to your task		

Specific Comments or Problems:

Please tell us how we can improve this book:

Thank you for your response. When you send information to IBM, you grant IBM the right to use or distribute the information without incurring any obligation to you. You of course retain the right to use the information in any way you choose.

Your Internet Address: _____

Name

Address

Company or Organization

Phone No.

Help us help you!
GC31-8476-00

Cut or Fold
Along Line

Fold and Tape **Please do not staple** Fold and Tape

NO POSTAGE
NECESSARY
IF MAILED IN THE
UNITED STATES

BUSINESS REPLY MAIL

FIRST-CLASS MAIL PERMIT NO. 40 ARMONK, NEW YORK

POSTAGE WILL BE PAID BY ADDRESSEE

Information Development
Department CGMD
International Business Machines Corporation
PO BOX 12195
RESEARCH TRIANGLE PARK NC 27709-9990

Fold and Tape **Please do not staple** Fold and Tape

GC31-8476-00

Cut or Fold
Along Line

Printed in the United States of America
on recycled paper containing 10%
recovered post-consumer fiber.

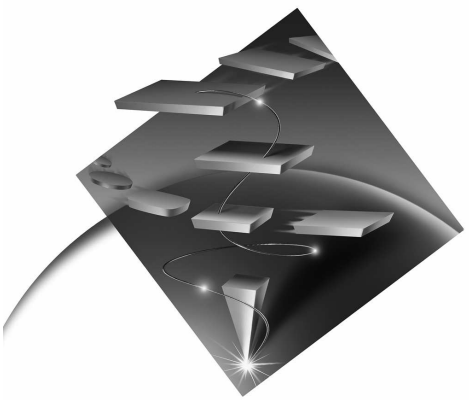

GC31-8476-00

Spine information:

eNetwork Personal Communications
Version 4.2
for Windows 95 and Windows NT

Quick Beginnings