Business Transaction Broker
for z/OS

# Installation Guide

*Version 1 Release 0*

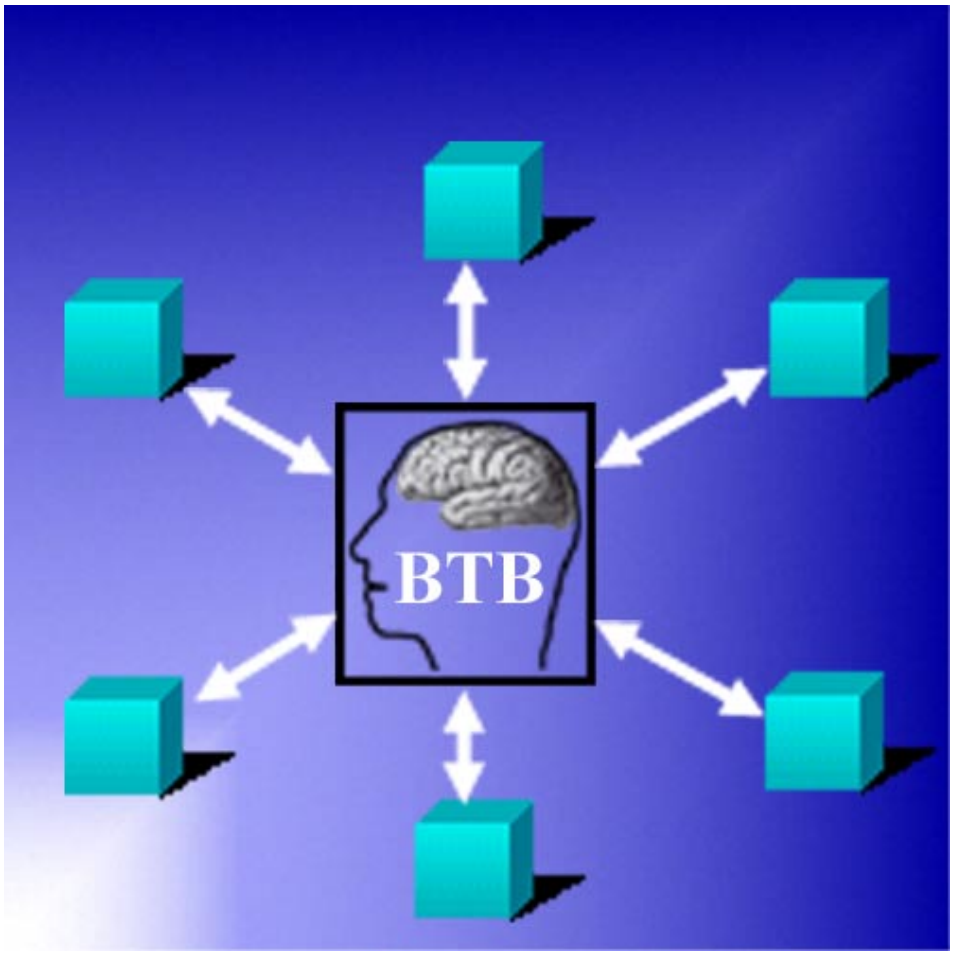


GC27-1581-01

Business Transaction Broker
for z/OS

# Installation Guide

*Version 1 Release 0*

GC27-1581-01

**Note!**

Before using this information and the product it supports, be sure to read the general information under “Notices” on page ix.

**Second Edition (September 2002)**

This edition applies to Version 1, Release 0 of Business Transaction Broker for z/OS (product number 5799-GPR) and to all subsequent versions, releases, and modifications until otherwise indicated in new editions. Make sure you are using the correct edition for the level of the product.

Download publications via internet at the following address:

`http://www.ibm.com/software/ad/imb`

Publications are not stocked at the address below.

Please address your comments to:

IBM Global Services
Sortemosevej 21
DK-3450 Alleroed
Denmark

☏ + (45) 45 23 30 00
Fax + (45) 45 23 68 01
E-mail SPOC@dk.ibm.com

When you send information to IBM, you grant IBM a nonexclusive right to use or distribute the information in any way it believes appropriate without incurring any obligation to you.

© **Copyright International Business Machines Corporation 1992, 2002. All rights reserved.**
US Government Users Restricted Rights – Use, duplication or disclosure restricted by GSA ADP Schedule Contract with IBM Corp.

# Contents

**Figures** . . . . . v

**Tables** . . . . . vii

**Notices** . . . . . ix
Trademarks and service marks . . . . . ix

**Preface** . . . . . xi
About this book . . . . . xi
Who should read this book . . . . . xi
Conventions and terminology used in this book . . . . . xi
Note about version and release numbering . . . . . xi
How to use this book . . . . . xii
Bibliography . . . . . xii
Books from related libraries . . . . . xii
How to send your comments . . . . . xiii

**Summary of changes** . . . . . xv

**Chapter 1. Planning for Business Transaction Broker** . . . . . 1
Introducing Business Transaction Broker . . . . . 1
Understanding the MailRoom . . . . . 2
Auditing and logging . . . . . 2
Hardware prerequisites . . . . . 2
Software prerequisites . . . . . 2
Storage requirements . . . . . 4
Security and access . . . . . 5
National Language Support (NLS) and Multi Country Operations (MCO) . . . . . 5
Naming conventions . . . . . 6
Planning for MailRoom . . . . . 6

**Chapter 2. Installing Business Transaction Broker** . . . . . 7
Restoring the BTB libraries . . . . . 8
Defining RACF user IDs . . . . . 11
Defining a VSAM catalog alias . . . . . 13
Customizing Language Environment . . . . . 13
Setting up CICS . . . . . 14
Defining the VSAM data sets . . . . . 26
Establishing the IMS back-end environment . . . . . 27
Special MQSeries definitions . . . . . 31
Making the VTAM definitions . . . . . 31
Setting up DB2 . . . . . 32
Modifying the BTB standard signon and signon help maps . . . . . 41
Hints for establishing DB2 and IMS environments. . . . . 43
Importing members from TSO to a QMF environment . . . . . 44
Starting the BTB CICS region . . . . . 44
Customizing the Working Criteria (WC) table . . . . . 45
Mail configuration . . . . . 47

**Chapter 3. Migrating to Intelligent Message Broker 4.5** . . . . . 55

© Copyright IBM Corp. 1992, 2002

Getting the migration package . . . . . 55
Upgrading from an existing IMB 4.4 system . . . . . 55
Additional migration tasks . . . . . 58
Using the DB2 Administration Tool . . . . . 58

**Chapter 4. Verifying Business Transaction Broker** . . . . . 59
Logging on to BTB . . . . . 59
Creating a Service . . . . . 60
Creating an Agreement Set . . . . . 60
Adding a Service to an Agreement Set . . . . . 61
Adding an Agreement Set to a Trading Partner . . . . . 61
Inserting an Electronic Address . . . . . 62
Creating a Subscription . . . . . 62
Checking Subscriptions . . . . . 64
Running the verification transaction . . . . . 64
Checking Envelope status . . . . . 64

**Chapter 5. Implementing your production environment** . . . . . 67
Preparing CICS and IMS . . . . . 67
Copying the load libraries . . . . . 67
Copying the DBRMs . . . . . 67
Preparing DB2 . . . . . 67
Setting up Expedite . . . . . 68
Setting up TCP/IP . . . . . 68
BTB registrations . . . . . 70
Starting your production Business Transaction Broker system . . . . . 70

**Chapter 6. Understanding the archiving function** . . . . . 71
Introducing BTB archiving . . . . . 71
Archiving of MailRoom Transport tables group. . . . . 72
Define proper status in Sundry panel. . . . . 73
Define archive and delete options . . . . . 74
Archiving of ASCA tables group . . . . . 76
Archiving of Error message table group . . . . . 77
Archiving of Export table group . . . . . 77
Archiving of Administration table group . . . . . 78

**Chapter 7. Performance, tuning, and maintenance** . . . . . 81
The basic system . . . . . 81
CICS tuning . . . . . 81
DB2 tuning . . . . . 83
Understanding Business Transaction Broker Health Check . . . . . 84
Understanding the CICS Program Error Program (DFHPEP) . . . . . 86

**Glossary** . . . . . 89

**Index** . . . . . 93

# Figures


1. Distributed Data Facility . . . 43
2. Working Criteria Table Entries . . . 45
3. Contents of mail log KBHMLOG . . . 54
4. Logon panel . . . 59
5. Main Panel . . . 59
6. Mailroom Services . . . 60
7. Insert new MailRoom Service . . . 60
8. Agreement Sets . . . 60
9. Insert new Agreement Set . . . 60
10. Agreement Sets . . . 61
11. Mailroom Services in Agreement Set (Add) . . . 61
12. Mailroom Services . . . 61
13. Trading Partners . . . 61
14. Agreement Sets (Add) . . . 62
15. Electronic Addresses . . . 62
16. Insert new Electronic Address . . . 62
17. Mailroom-Services Available for Subscription (Sender) . . . 62
18. Insert new MailRoom Send Subscription . . . 63
19. Mailroom-Services Available for Subscription (Receiver) . . . 63
20. Insert new MailRoom Receive Subscription . . . 63
21. Mailroom-Services Available for Subscription (Receiver) . . . 63
22. Insert new MailRoom Receive Subscription . . . 64
23. Trading Partners subscribing to Service . . . 64
24. MailRoom Source Envelope Status . . . 65
25. MailRoom Requests in an Envelope . . . 65
26. MailRoom List of Events (Program) . . . 65
27. MailRoom List of Events (Mail) . . . 65
28. EZAC transaction . . . 69
29. MailRoom Sundry Table panel . . . 74
30. WC Table Health Check entries . . . 85
31. Health Check . . . 86


© Copyright IBM Corp. 1992, 2002

# Tables


1. BTB installation DASD requirements . . . . . 4
2. BTB additional DASD needed . . . . . 4
3. RACF CICS transaction protection . . . . . 13
4. BTB CICS transactions . . . . . 16
5. MailRoom CICS transactions . . . . . 17
6. Problem determination CICS transactions . . . . . 19
7. DataInterchange and Expedite/CICS CICS transactions . . . . . 19
8. Other CICS transactions . . . . . 19
9. Mail routing . . . . . 47


© Copyright IBM Corp. 1992, 2002

# Notices

References in this publication to IBM products, programs, or services do not imply that IBM intends to make these available in all countries in which IBM operates. Any reference to an IBM product, program, or service is not intended to state or imply that only that IBM product, program, or service may be used. Subject to IBM's valid intellectual property or other legally protectable rights, any functionally equivalent product, program, or service may be used instead of the IBM product, program, or service. The evaluation and verification of operation in conjunction with other products, except those expressly designated by IBM, are the responsibility of the user.

IBM may have patents or pending patent applications covering subject matter in this document. The furnishing of this document does not give you any license to these patents. You can send license inquiries, in writing, to:

IBM Director of Licensing
IBM Corporation
North Castle Drive
Armonk, NY 10504-1785
U.S.A.

## Trademarks and service marks

The following terms are trademarks of the IBM Corporation in the United States or other countries or both:

| | |
|---|---|
| ACF/VTAM | MQSeries |
| AIX | MVS/ESA |
| CICS | OS/2 |
| DB2 | OS/390 |
| ExpEDIte | QMF |
| IBM | RACF |
| IBM Global Network | VTAM |
| IMS | WebSphere |

The following terms, used in this publication, are trademarks of other companies:

| | |
|---|---|
| Mercator | Mercator Software, Inc. |
| SAP | SAP AG |

Windows and Windows NT are trademarks of Microsoft Corporation in the United States and/or other countries.

UNIX is a registered trademark in the United States and/or other countries licensed exclusively through X/Open Company Limited.

© Copyright IBM Corp. 1992, 2002

# Preface

## About this book

This book is intended to help you install Business Transaction Broker for z/OS (BTB). It contains guidance about the installation of, and subsequent maintenance of BTB.

IBM Business Transaction Broker for z/OS helps address brokering requirements and helps enable enterprises to implement brokering solutions with confidence. While IBM Business Transaction Broker for z/OS is designed to facilitate Application-to-Application (A2A) brokering for interchange between internal applications within a customer's enterprise, the dominant strength of this product is revealed and appreciated when implementing Business-to-Business (B2B) brokering for the external interchange outside of the customer's enterprises.

To better emphasize its B2B brokering capabilities, the IBM program product formerly known as Intelligent Message Broker for z/OS has now been renamed Business Transaction Broker for z/OS (BTB).

## Who should read this book

This book is for technical people, such as system programmers and data base administrators (DBAs), who are responsible for installing and tailoring BTB. Their experience should cover:

- CICS
- DB2
- IMS
- RACF
- VSAM

## Conventions and terminology used in this book

In this book, Business Transaction Broker for z/OS is referred to as "Business Transaction Broker" or simply "BTB" where the context makes the meaning clear.

CICS refers to CICS Transaction Server for OS/390. CICS resource definitions described in this book are for CICS TS 1.3.

RACF means the Resource Access Control Facility or any other external security manager that provides equivalent function.

## Note about version and release numbering

Where the documentation for Business Transaction Broker - in particular this manual - refers to the actual contents of the product, e.g. dataset names, it will refer to Version 4, Release 5. This is because this product has a history of being distributed internally within IBM as Intelligent Message Broker (IMB) for a number of years. Within IBM the product has matured to a Version/Release level of 4.5.

© Copyright IBM Corp. 1992, 2002

## How to use this book

The Installation Guide consists of these chapters:

- Chapter 1, “Planning for Business Transaction Broker” introduces BTB and helps you plan for BTB
- Chapter 2, “Installing Business Transaction Broker” describes how to install BTB
- Chapter 3, “Migrating to Intelligent Message Broker 4.5” describes the migration process
- Chapter 4, “Verifying Business Transaction Broker” shows how you verify your system
- Chapter 5, “Implementing your production environment” describes putting BTB into production
- Chapter 6, “Understanding the archiving function” describes the archiving function
- Chapter 7, “Performance, tuning, and maintenance” discusses the performance and tuning aspects of BTB

## Bibliography

### Business Transaction Broker for z/OS books

| | |
|---|---|
| *Business Transaction Broker for z/OS General Information* | GC27-1580 |
| *Business Transaction Broker for z/OS Facilities Guide* | SC27-1584 |
| *Business Transaction Broker for z/OS Installation Guide* | GC27-1581 |
| *Business Transaction Broker for z/OS Application Programming Guide* | SC27-1583 |
| *Business Transaction Broker for z/OS System Administration Guide* | SC27-1582 |
| *Business Transaction Broker for z/OS User Administration Guide* | SC27-1585 |

Futher copies of the Business Transaction Broker for z/OS publications can be downloaded from the product web site:

`http://www.ibm.com/software/ad/imb`

## Books from related libraries

### CICS TS books

| | |
|---|---|
| *CICS Transaction Server for OS/390 Release Guide* | GC34-5352 |
| *CICS Transaction Server for OS/390 Installation Guide* | GC33-1681 |
| *CICS Transaction Server for OS/390 System Definition Guide* | SC33-1682 |
| *CICS Transaction Server for OS/390 Resource Definition Guide* | SC33-1684 |
| *CICS Transaction Server for OS/390 Operations and Utilities Guide* | SC33-1685 |
| *CICS Transaction Server for OS/390 System Programming Reference* | SC33-1689 |
| *CICS Transaction Server for OS/390 Messages and Codes* | GC33-1694 |
| *CICS Transaction Server for OS/390 Intercommunication Guide* | SC33-1695 |
| *CICS Transaction Server for OS/390 Performance Guide* | SC33-1699 |

**DataInterchange for MVS books**

| | |
|---|---|
| *DataInterchange Messages and Codes* | SB34-2000 |
| *DataInterchange Programmer's Reference* | SB34-2001 |
| *DataInterchange Administrator's Guide* | SB34-2002 |

**DB2 books**

| | |
|---|---|
| *DB2 for OS/390 Administration Guide* | SC26-8957 |
| *DB2 for OS/390 Application Programming and SQL Guide* | SC26-8958 |
| *DB2 for OS/390 Command Reference* | SC26-8960 |
| *DB2 for OS/390 Utility Guide and Reference* | SC26-8967 |

**Expedite/CICS books**

| | |
|---|---|
| *Customizing and Developing Applications with Expedite/CICS* | GC34-3304 |

**IBM EDI Services Information Exchange books**

| | |
|---|---|
| *IBM EDI Services Information Exchange Interface Programming Guide* | GC34-2222 |

**MQSeries books**

| | |
|---|---|
| *MQSeries Planning Guide* | GC33-1349 |
| *MQSeries for OS/390 System Management Guide* | SC34-5374 |

**MVS books**

| | |
|---|---|
| *MVS Planning:Global Resource Serialization* | GC28-1759 |

**RACF books**

| | |
|---|---|
| *OS/390 Security Server (RACF) Administrator's Guide* | SC28-1915 |

**Automated Operations Control/MVS books**

| | |
|---|---|
| *AOC/MVS Planning and Installation* | GC28-1082 |
| *AOC/MVS Operations* | GC28-1084 |

**ACF/VTAM books**

| | |
|---|---|
| *Advanced Communications Function for VTAM Installation and Resource Definition* | SC23-0111 |

## How to send your comments

Your feedback is important in helping to provide the most accurate and highest quality information. If you have any comments about this book or any other BTB documentation:

- Send your comments by email to *SPOC@dk.ibm.com*. Be sure to include the name of the book, the part number of the book, the version of BTB, and, if applicable, the specific location of the text you are commenting on (for example, a page number or table number).
- Mail or fax your comments to the address at the front of this book.

# Summary of changes

The major enhancements to this release of Business Transaction Broker are:

**Source Exit**

BTB now supports source exits, which makes it easier to implement support for new document types. One new area in this release is XML document routing support. The source scenario will handle incoming documents like this:

- A business document in its original format is passed to BTB. MailRoom will perform a lookup to determine if a source exit should be invoked.
- For MQSeries based scenarios there is an Unpack Exit that should split the received MQ buffer into records.
- For all scenarios (except BATCH and TIE-IMS) there is a Source exit that can build BTB routing information (the M-record) if it is not available in the received document.
- The received document together with the generated M-record is stored in the transport table. The remaining processing is unchanged.
- The MailRoom source exit table holds registrations of exits used by source scenarios. Source exits are either global for a scenario, or specific for a single sender.
- MailRoom supplied source exits will, as default, be used to build the M-record for the DI-EDI, EXP-FILE, SAP and SAP-MQ source scenario. A source exit with XML support is available (see below). Other user written source exits can be written to extend the format support in MailRoom.

**XML support**

BTB now supports receiving and dynamic routing of XML documents. A XML source exit is available to extract XML elements for building BTB routing information (the M-record). A new panel is available to define which XML elements or attributes should be extracted for each XML document type. A new kernel / destination exit can automatically convert a received XML document to a basic flat file format.

**MQSI V1.1 (MVS) reformatter exit**

BTB now has an MQSI reformatter exit. In the first version it can format a document to a stream format (records separated with character delimitors), put it on a queue, wait for MQSI to reformat it, get the reformatted stream and finally return it to MailRoom as an updated version of the document.

**MailRoom Continuous Receive panel.**

A new online function makes it easy to check the status of DataInterchange and Expedite/CICS continuous receives. DI profiles can be stopped and started. It is possible to define a number of profiles as mandatory. A function key can be used to check if the mandatory profiles are active.

© Copyright IBM Corp. 1992, 2002

**Archiving depending on status**

Every installation must archive data from the MailRoom DB2 tables in order to remove old data. It is now possible to define the status codes that are applicable for archiving. It is thereby possible to reflect the day to day operational method in the archiving strategy. E.g. FAILed documents are considered open problems and stay in MailRoom until fixed (status changes to FINISH or manually CANCELed). Another principle could be that FAILed documents should be automatically archived.

**Schedule process change**

A change has been made in the Output Schedule in MailRoom to control the order of sending scheduled envelopes for the same destination. Previously the sending order was in envelope key sequence. Now scheduled envelopes to the same destination are grouped in a single destination envelope and the sending order has been changed to the received order.

**Possibility to Mail Text segments**

In error situations, when processing EDI like EDIFACT and ANSI X12, a copy of the EDI document is needed for documentation. A new function has been implemented to mail the DataInterchange reports and segments to a specific user Id and node or e-mail address.

**Reflow of saved DI audit reports**

The text in the DataInterchange audit reports is now automatically reflowed to the width of the panel. It is no longer necessary to scroll right and left to read the audit report.

**Segmentation of saved EDIFACT envelope**

The saved EDIFACT envelope file is now split in segments to improve the readability.

**Handling of a group of envelopes/requests**

A new facility is made available to handle more than one envelope using a single group command. Some of the online functions (cancel, fail, finish, resend, restart, sysack) are made available as a group command for multiple envelopes.

**Automatic resending of MAIL destination to Internet**

We now put documents on the MailRoom XMIT queue if the SMTP server is temporary unavailable.

**New MQSeries Batch Read Utility**

In addition to the MQSeries Batch Write Utility introduced in last release we now also have a MQSeries Batch Read Utility that can get MailRoom formatted messages from a MQ queue and write them to a file.

**SAP R/3 Version 4 improvements**

MailRoom now supports sending and receiving SAP R/3 Version 4 IDOCs.

**Codepage conversion exit**

A new codepage conversion exit is now available as kernel or destination exit. With supplied codepage translation tables it can convert a document from one codepage to another.

**Mercator remapping exit improvements**

The Mercator exit has been improved with support for selection of profiled or fixed length for input and output (:P or :W parameters to Mercator). Now it is also possible to pass additional command options to Mercator.

# Chapter 1. Planning for Business Transaction Broker

Careful planning is needed to ensure successful installation of BTB. This chapter introduces BTB and guides you through some tasks to consider before beginning the installation.

Planning must include considerations about:

- CICS
- IMS
- Back-end processing
- VSAM
- DB2
- RACF

## Introducing Business Transaction Broker

Business Transaction Broker, or BTB, is a mainframe-based solution that you can use to achieve business integration in a heterogeneous network connecting disparate platforms. BTB enables and controls communication between an organization and its trading partners, allowing business transactions with the trading partners to be run, controlled, and monitored with minimum effort.

Electronic Data Interchange (EDI) services are controlled by the BTB MailRoom components, interfacing with IBM DataInterchange, or directly to Expedite/CICS.

BTB is also a client/server solution — Windows, OS/2, and AIX clients are supported.

BTB supports these access methods:

- 3270-type native or emulated terminal access (also called NPT, or non-programmable terminals)
- Asynchronous data exchange using the IBM Global Network service Information Exchange.
- Client/server access, with Windows, OS/2 or AIX clients accessing the servers. BTB acts as middleware, controlling access to the servers.
- Messaging using MQSeries

BTB runs under CICS and can communicate with:

- IMS applications
- CICS applications
- APPC-connected systems
- TCP/IP-connnected systems

© Copyright IBM Corp. 1992, 2002

## Understanding the MailRoom

The MailRoom enables and controls EDI communication between an organization and its trading partners. The interface to business applications is provided through source and destination setups supporting:

- APPC
- Batch
- CICS programs
- IMS programs
- MQSeries
- SAP
- TCP/IP

The BTB MailRoom is based on BTB back-end, DataInterchange, Expedite/CICS and optionally TIE running in CICS, and partly in IMS. The application programming interfaces (APIs) also support batch jobs.

## Auditing and logging

BTB has built-in auditing and logging features. Some of these features can be used by developers to get an audit trail of application usage. Refer to the *Application Programming Guide*, and to the *System Administration Guide* for more details. The MailRoom also has full logging capability for all incoming and outgoing documents.

See also “The mail transmission log (KBHMLOG)” on page 54.

## Hardware prerequisites

Hardware prerequisites are determined by your CICS level. For the hardware prerequisites for your level of CICS, refer to *CICS Transaction Server for OS/390 Release Guide*.

## Software prerequisites

The software levels detailed here are the minimum levels required.

## BTB base

For the BTB base product:

- OS/390 Version 2 Release 6
- CICS Transaction Server for OS/390 1.3
- DB2 Version 5 Release 1
- CSP/370 Runtime Services Version 2 Release 1

## MailRoom

For MailRoom support:

- expEDIte/CICS Version 4.5.0
- DataInterchange/MVS-CICS Version 3 Release 1
- ECMVS TIE release Release 2.2
- MQSeries for MVS/ESA Version 2 Release 1
- Mercator Execution Engine 1.4.03

For Mailman:

- VM/ESA Version 2 Release 1
- CMS Pipelines

## OS/2 APPC Client support

For OS/2 APPC Client support:

- CIS-CSCS Version 2 Release 1 (optional—included with BTB)
- CICS OS/2 Version 2 (optional—not included with BTB)
- A2AIF (optional—a subset of A2AIF is included with BTB)

And an OS/2 environment consisting of:

- OS/2 Version 2.11 or higher, including Warp version 3 and version 4 (Merlin)
- Communication Manager/2 Version 1.1 or higher, or Communications Server 4 or higher

## OS/2 TCP/IP Client support

For OS/2 TCP/IP Client support, in addition to OS/2:

- TCP/IP Version 3

## Windows Client support

For Windows TCP/IP Client support, any of these:

- Windows NT Version 4
- Windows 2000
- Windows 98
- Windows 95

## AIX TCP/IP Client support

For AIX TCP/IP Client support:

- AIX Version 4 Release 1

## SAP R/3 Client support

For SAP R/3 Client support:

- AIX Version 4 Release 1
- SAP R/3 Version 3 Release 0F

# Storage requirements

## Direct Access Storage Device (DASD) requirements

DASD space needed to receive BTB is shown here:

*Table 1. BTB installation DASD requirements*

| Description | Space |
|---|---|
| IM450RCP (CICS) and IM450RIP (IMS) DFSMSdss tersed files | 40 cylinders |
| IM450RUC (CICS) and IM450RUI (IMS) DFSMSdss untersed files (can be deleted after successful DFSMSdss restore) | 75 cylinders |
| CICS LOAD library | 55 cylinders |
| CICS Sign-on & BEC library | 3 cylinders |
| IMS LOAD library | 2 cylinders |
| Batch LOAD library | 2 cylinders |
| Various libraries (JCL,SQL) | 15 cylinders |
| BTB message file | 6 tracks |
| Various unloaded DB2 tables | 50 tracks |

To run BTB:

*Table 2. BTB additional DASD needed*

| Description | Space |
|---|---|
| CICS System data sets | 60+ cylinders |
| DB2 (working) tables | 50+ cylinders |

Estimates are based on the assumption that MailRoom is not used. If MailRoom is used, the BTB DB2 tables will need at least 500 cylinders of disk space.

As DFSMSdss is used for packaging and restoring all the data sets, you need not preallocate all data sets. However you must have enough free space available.

## Virtual Storage requirements

BTB runs in a CICS environment, which controls the allocation of virtual storage. Virtual storage needs are dependent on usage, the number of concurrent users, and the number of applications implemented. If your are setting up new CICS systems in which to run BTB, you can use these initial storage settings, which are defined in the CICS system initialization table (SIT):

```
DSALIM=4M,          DSA BELOW 16M
EDSALIM=96M,        DSA ABOVE 16M
```

Refer to the CICS library for more information about dynamic storage settings.

Some VSAM data sets can be defined as CICS data tables, exploiting the use of expanded storage. See Chapter 7, “Performance, tuning, and maintenance” on page 81 for details.

## Security and access

### DFSMSdss

You must run DFSMSdss to restore the BTB data sets from the DFDSS file, so ensure you have RACF READ access to the ADRDSSU program.

### DB2 aliases

The creator or owner of the DB2 tables may not be the same as the recommended fixed SQLID used by CICS. So you must create aliases to the tables stating the CICS SQLID as owner. It is recommended you create ALIASes and not SYNONYMs for the DB2 tables.

### PACKADM authority

You will need PACKADM authority to KBHL to bind the BTB DB2 packages in the collection. You can be granted this authority even if the collection does not exist.

A set of jobs and utilities are provided with BTB. One job binds packages for DataInterchange Version 3 Release 1. The installation procedure assumes that you bind the DataInterchange packages in a collection named EDIL. To bind them, you also need PACKADM authority to EDIL.

## National Language Support (NLS) and Multi Country Operations (MCO)

BTB is designed with MLS (Multi Language support). The components of BTB that are intended for general users support many languages. Language is a user attribute, so one copy of BTB can support users with different languages at the same time.

All panels in BTB are in English. The unloaded message table contains English, Danish, and BTB technical support messages.

The language codes used are the ISO 639.2 2-character language codes. BTB accepts all two-character language codes in ISO 639.2.

**Note:** *UK* indicates *UK English*. *EN* is defined for eventual future migration to the standard language code.

The contents of all the MLS panels are kept in CSP tables and *language code* is part of the key. To add a new language, these tables must be extended or updated with the texts in the new language. This is also the case for the message table. The *Application Programming Guide* shows how the CSP tables are built.

## BTB Multi Country Operation.

BTB can operate several countries (or organizations) within the same copy of BTB. The DB2 tables are all assigned country-specific IDs (*countryid*), so users of one country will not be confused with users from another country with same trading partner number.

A scope check facility lets you delegate some administrative tasks on a country level. For more information, refer to *User Administration Guide*.

## Naming conventions

BTB has a predefined naming convention for all components, based on internationally-coordinated prefixes. These should not conflict with the naming of other components.

**Note:** It is recommended you do not change any names in BTB unless specifically requested to do so in this book.

However, if you must change the names, you should install BTB with the names supplied, and when the test installation is complete, you can clone the system with names of your choice.

## Planning for MailRoom

## Information Exchange Mailboxes

Before the MailRoom can be run, you need these IBM Global Network (IGN) Information Exchange (IE) mailbox IDs:

- One IE mailbox ID for MailRoom export
- One or more IE mailboxes for the MailRoom

You cannot use the same mailbox for both.

## Planning for CICS with MailRoom

Planning for CICS with MailRoom is covered in “Setting up CICS” on page 14.

You must plan for enabling one of your business applications for EDI support. The *System Administration Guide* and DataInterchange library describe how to do this.

Samples used to verify the installation of BTB and the implementation of the MailRoom is part of the BTB IM450RUN package.

# Chapter 2. Installing Business Transaction Broker

To ensure a smooth installation, you must carefully prepare your environment.

If you already have an BTB system running, go to “Tailoring CICS for BTB” on page 14.

## The release tape contents

The tape contains these files:

| Filename | Contents |
|---|---|
| **IM450RCP DFDSS** | The DFSMSdss dump of all the CICS components for BTB (in tersed format). |
| **IM450RIP DFDSS** | The DFSMSdss dump of all the components for the IMS environment (in tersed format). |
| **IM450RUN JCL** | A sample job to unterse and restore the DFSMSdss files. |

## Unloading the release tape

Modify this JCL to suit your installation and use it to unload the three files on the tape.

```
//UNLOAD JOB <job parameters>
//*****************************************************
//* JOB NAME = UNLOAD                                 *
//*                                                   *
//*       INTELLIGENT MESSAGE BROKER FOR z/OS 5799-GPR *
//*                                                   *
//* DESCRIPTION: THIS JCL WILL UNLOAD FILES ON A TAPE  *
//*              TO DATA SETS ON DASD.                *
//*                                                   *
//* CAUTION:     THIS IS NEITHER A JCL PROCEDURE NOR   *
//*              A COMPLETE JOB.                      *
//*              YOU WILL HAVE TO MAKE MODIFICATIONS   *
//*              BEFORE SUBMITTING THIS JOB.          *
//*                                                   *
//* NOTES:                                            *
//* 1) ADD A JOB CARD TO MEET YOUR SYSTEM'S           *
//*    REQUIREMENTS.                                  *
//* 2) CHANGE hlqual TO THE APPROPRIATE HIGH-LEVEL     *
//*    QUALIFIER THAT COMPLIES WITH YOUR LOCAL        *
//*    ENVIRONMENT NEEDS.  NAME OF THE OUTPUT DATA SETS*
//*    IN THIS JOB SHOULD BE THE SAME AS THE NAME OF   *
//*    THE INPUT DATA SETS IN YOUR IM450RUN JCL.      *
//*                                                   *
```

© Copyright IBM Corp. 1992, 2002

```
//*****************************************************
//* COPY FILE 1                                       *
//*****************************************************
//COPY1    EXEC  PGM=IEBCOPY
//SYSPRINT DD SYSOUT=H
//SYSUT1   DD DSN=IM450RUN,
//         UNIT=(3480,,DEFER),
//         LABEL=(1,SL),
//         DISP=(OLD,KEEP),
//         VOL=SER=270100
//SYSUT2   DD DSN=hlqual.IM450RUN.JCL,
//         UNIT=SYSDA,
//         DISP=(,CATLG),
//         SPACE=(TRK,(100,50,50)),
//         DCB=(LRECL=80,RECFM=FB,BLKSIZE=6160)
//SYSIN    DD DUMMY
//*****************************************************
//* COPY FILE 2                                       *
//*****************************************************
//COPY2    EXEC  PGM=IEBGENER
//SYSPRINT DD SYSOUT=H
//SYSUT1   DD DSN=IM450RIP,
//         UNIT=(3480,,DEFER),
//         LABEL=(2,SL),
//         DISP=(OLD,KEEP),
//         VOL=SER=270100
//SYSUT2   DD DSN=hlqual.IM450RIP.TEST,
//         UNIT=SYSDA,
//         DISP=(,CATLG),
//         SPACE=(TRK,(5500,50,50)),
//         DCB=(LRECL=1024,RECFM=FB,BLKSIZE=6144)
//SYSIN    DD DUMMY
//*****************************************************
//* COPY FILE 3                                       *
//*****************************************************
//COPY3    EXEC  PGM=IEBGENER
//SYSPRINT DD SYSOUT=H
//SYSUT1   DD DSN=IM450RCP,
//         UNIT=(3480,,DEFER),
//         LABEL=(3,SL),
//         DISP=(OLD,KEEP),
//         VOL=SER=270100
//SYSUT2   DD DSN=hlqual.IM450RCP.TEST,
//         UNIT=SYSDA,
//         DISP=(,CATLG),
//         SPACE=(TRK,(5500,50,50)),
//         DCB=(LRECL=1024,RECFM=FB,BLKSIZE=6144)
//SYSIN    DD DUMMY
/*
```

## Restoring the BTB libraries

To restore from the DFSMSdss dump file, the original high-level qualifier **KBH**. must be known to your system. Your jobs must have RACF READ access to data sets with this high-level qualifier.

It is suggested to rename the data set to high-level qualifier **IMI** during the restore. IMI is the IBM apporved prefix for Business Transaction Broker. Your jobs must have RACF ALTER access to data sets with this high-level qualifier.

Modify the file IM450RUN JCL according to your local standards. The job is designed to run on a system controlled by System Managed Storage (SMS). If you bypass SMS or SMS is inactive:

- Remove the NULLMNGTCLASS and NULLSTORCLASS statements
- Add an ODD(*DD-name1*,*DD-name2*) statement
- Add DD statements for the DASDs to receive the BTB data sets

```
...
 //IM450RUC DD DISP=SHR,DSN=KBH.R450.IM450RUC
 //IMVOL    DD  DISP=SHR,UNIT=SYSDA,VOL=SER=IMVOL1
 //SYSIN    DD  *
  RESTORE DATASET(FILTERDD(FILTER)) -
          IDD(IM450RUC) -
          ODD(IMVOL) -
 ...
```

To rename the data sets, add a RENUNC control statement like this:

```
RENUNC(KBH.**,IMI.**)
```

Run the job—the return code should be 4 or less. You will find these datasets on your system:

| Dataset name | Contents |
|---|---|
| **KBH.R450.ASM** | Assembler source for the SIGNON, SIGNON HELP, PEP and PEP HELP panels in English. |
| **KBH.R450.ASMMAC** | Assembler macro source. |
| **KBH.R450.BIND** | DB2 statements to BIND EDS DB2 plans and the BTB general DB2 plan. |
| **KBH.R450.CICS** | COPYBOOKS for CICS system table extensions for BTB. |
| **KBH.R450.CONTENTS** | IEBCOPY statements used to build the installation package. This is included to document the contents of the PDSs. |
| **KBH.R450.DBRM** | Source for DB2 access modules. Used when binding DB2 packages. |
| **KBH.R450.DPAPLOAD** | Load modules for signon, BEC and PEP programs. |
| **KBH.R450.EXEC** | REXX source. |
| **KBH.R450.HELP** | Tagged source for help screens for BTB applications exploiting the extended help feature. |
| **KBH.R450.IMS** | COPYBOOKS for IMS system table extensions for BTB. |
| **KBH.R450.KAFCNTRL** | DB2 load utility input for loading KAF tables. |
| **KBH.R450.KAFT*** | Unload datasets of DB2 tables for Trading Partner registrations (see “KAF tables” on page 35 for the full list). |
| **KBH.R450.KBBCNTRL** | DB2 load utility input for loading KBB tables. |
| **KBH.R450.KBBT*** | Unload datasets of DB2 tables for back-end communication (see “BEC control tables” on page 35 for the full list). |
| **KBH.R450.KBDCNTRL** | DB2 load utility input for loading KBD tables. |
| **KBH.R450.KBDT*** | Unload datasets of DB2 tables for BTB (see “BTB tables” on page 35 for the full list). |
| **KBH.R450.LINK** | Link statements to be used for relink. |
| **KBH.R450.LOAD** | BTB batch and TSO load library. |
| **KBH.R450.MFS** | MFS format source (for BEC). |
| **KBH.R450.NCAL** | Loadable and linkable modules for relinking of PL/1 and assembler programs.<br><br>**Note:** These object modules are all internal BTB components and are not to be used by other applications. |

| | |
|---|---|
| **KBH.R450.PLI** | BTB sample PL/1 programs. |
| **KBH.R450.PLINCL** | PL/1 %INCLUDE source used in the sample programs. |
| **KBH.R450.PROCLIB** | BTB JCL procedures. Used in several jobs in KBH.R450.RUN. |
| **KBH.R450.PSB** | IMS PSB source for MailRoom. |
| **KBH.R450.QMFFORM** | QMF source for forms. |
| **KBH.R450.QMFPROC** | QMF source for PROCedures used for reports. |
| **KBH.R450.QMFQUERY** | QMF source for queries. |
| **KBH.R450.RUN** | Installation and maintenance JCL. |
| **KBH.R450.SENDMQ.INPUT** | Sample input for the MQSeries batch utility. Sample JCL is in the RUN library member KBASMPX. |
| **KBH.R450.SQL** | DB2 statements for creation and maintenance of BTB DB2 tables. |
| **KBH.R450.TPCLOAD** | CICS load library. Concatenate to CICS DFHRPL DD statement. |
| **KBH.R450.TPILOAD** | IMS load library. Concatenate to IMS STEPLIB DD statement. |
| **KBH.R450.UTIL** | Utility (and others) input data. |

## Defining RACF user IDs

To install, maintain, and operate BTB, you need to define at least one RACF TSO user ID. The three user IDs described here can be the same ID. In practice only the BTB *owner* need be a *real* TSO user ID, the others are simply RACF DB2 definitions.

## TSO user ID

Although it is not absolutely necessary, it is advisable to define a dedicated TSO RACF user ID from which to run all the installation work. Consider having separate user IDs for each BTB system.

## CICS user ID for BTB Central User Administrator

The initial data loaded into BTB operates with a initial administrator user ID with all authorizations called **IMADM**. You can use the TSO user ID, but that forces you to make changes to the contents of the delivered unloaded tables (described in “Setting up DB2” on page 32).

It is recommended you use IMADM until BTB is up and running, and then using IMADM as central administrator, define a new central administrator with a different name.

**Note:** The user ID can be a maximum of seven characters.

## DB2 user IDs as BTB SQLID (optional)

All DB2 table references in BTB are unqualified. The qualifications are resolved at DB2 package BIND time—the qualifier for the tables is the plan owner. The plan owner and table creator can be the same. However, if they are different, *SQLID* must be the plan owner.

The SQLID that the attachment will use for DB2 access authorization is defined in the CICS DB2Entry (in RDO). All BTB CICS transactions are defined in CICS to use same ID as SQLID. This SQLID should be the same as the plan owner. The link between the table *creator.table* and *planowner.table* is established through ALIASes. The SQLID plan owner is the creator of these ALIASes.

The SQLID user ID must be defined in such a way that you can access DB2 from CICS, TSO and batch, using that (restricted) ID to define the ALIASes[1] for the BTB DB2 tables. The user ID need not be a *real* TSO userid, but the RACF setup must allow you to act on the actions of the user ID.

The samples in KBH.R450.SQL use the SQLID *KBH* as CICS SQLID (AUTH=KBH in DB2Entry).

## DB2 user ID as DB2 creator (optional)

You can set up an anonymous user ID as a DB2 table *owner* or *creator* of BTB DB2 objects. The user ID must be defined so you can access DB2 either from batch or TSO, using that (restricted) user ID to define DB2 objects for BTB.

The samples in KBH.R450.SQL use the SQLID *KBHTEST* for CREATOR.

## RACF CICS user ID as BTB user

When you verify your BTB system, you need a *real* user ID for CICS. This user ID must be defined to BTB, so BTB can build the access scope for the user.

A user ID *IMUSER* is defined in the delivered DB2 tables. You can use that user ID until you have defined the other IDs you need. If you do not want to use *IMUSER*, you must change the user ID in the KBDTUS unload data set (USER table), before loading the table.

It is recommended you do this when the system is running. Use the IMADM user ID to delete IMUSER and to define new users.

**Note:** The user ID can be a maximum of seven characters

---

[1] Some organizations restrict access to create ALIASes, so you can use SYNONYMs instead. However, if any of the tables are recreated, SYNONYMs disappear, whereas ALIASes are kept.

## CICS transaction protection

You must define these BTB transactions to RACF and grant permission to the relevant individuals or groups:

*Table 3. RACF CICS transaction protection*

| Transaction prefix | Description | Users needing access |
|---|---|---|
| KBA* | MailRoom background | Operator/CICS default user |
| KBK* | MailRoom background | Operator/CICS default user |
| KBL* | MailRoom background | Operator/CICS default user |
| KBB* | BEC background | Operator/CICS default user |
| KBC1 | Sign-on | Public access |
| KBCX | F4 sign-on ability | Operator/CICS default user |
| KBG* | Sample programs | Operator/CICS default user |
| KBH* | BTB online 3270 | All relevant users |
| KBI* | Client/Server | All relevant users |
| APIN | Windows or OS/2 to CICS *ping* | All relevant users |
| RCS2 | OS/2 APPC-CSCS communication | All relevant users |
| A2* | OS/2 APPC-A2A communication | Operator/CICS default user |
| HCHK | Panel interface to health check | Operator/CICS default user |
| HUSR | Display active users | Operator/CICS default user |
| HTSQ | Display active TS queues | Operator/CICS default user |
| HVSM | Browse a VSAM data set | Operator/CICS default user |

## Defining a VSAM catalog alias

To distinguish all the BTB data sets from the other data sets in your installation, define a VSAM CATALOG alias (or choose a high-level qualifier) for BTB. This could be the TSO user ID used for the installation, but it need not be a *real* user.

The distributed data sets use high-level qualifier *KBH*, but you can change this according to your standards.

## Customizing Language Environment

BTB is compiled with compilers which require LE/MVS run-time services.

Here are the recommended LE/MVS settings for running BTB:

**ALL31(ON)** Allows total execution above 16MB the line.

**STORAGE=(0K,NONE,NONE,0K)**
Program storage need not be pre-initialised.

**CBLPSHPOP(ON)**
Allows COBOL programs to issue PUSH/POP HANDLE commands.

**Note:** LE/MVS is not backwards compatible. You cannot use modules linked with one level of LE/MVS with a earlier level of run-time services library.

## Setting up CICS

This section describes how to set up the CICS environment for BTB.

## CICS copybooks

The delivered copybooks (sections of resource definitions) must be copied to your CICS table assembly jobs. Some names and IDs in the copybooks should not be changed. However, some must be modified according to your standards. All copybooks are marked where modification is needed.

**Note:** Do not change vital parameters, such as transaction names as this might inhibit the operation of BTB.

## Establishing a CICS environment

You should establish two CICS systems for BTB—one for production and one for testing. If you are developing your own applications to run under BTB, you might need more CICS systems.

## Tailoring CICS for BTB

Once you have established your CICS systems, you define the resources BTB needs.

BTB has its own version of these CICS programs:

**Sign-on program.**
This is defined in the CICS system initialization table (SIT). The BTB transaction replaces the default CICS welcome transaction.

**Program error program (DFHPEP).**
The BTB version replaces the CICS version.

**Node error program (DFHZNEP).**
The BTB version replaces the CICS version.

Concatenate the DPAPLOAD library before the CICS-provided load libraries to ensure these programs replace the CICS default versions.

MailRoom definitions are separated so you can omit the steps if you do not want to install this feature.

**Note:** Some of the CICS definitions needed by MailRoom originate from some of the program products on which the MailRoom is relying. It is assumed that Expedite/CICS and DataInterchange are both installed and operational, and that the terminal control table (TCT) definitions for the link to IE are in place.

The MailRoom DataInterchange response program needs a specific transaction work area (TWA) size, so the resource definition online (RDO) group KBA contains a redefinition of the DataInterchange transaction EDIB. This group must be included in the group list *after* the original DataInterchange RDO group.

The Expedite/CICS transaction IMR1 is also redefined. The redefinition of IMR1 is in RDO group KBA.

## CICS table assembly job

In your local CICS table assembly job, you can concatenate the supplied (or your own modified versions of) the CICS table copybooks to the SYSLIB DD name.

## Adapting the supplied CICS copybooks

You must modify the members in KBH.R450.CICS.

## RDO update job

This job defines all the RDO resources you need in a CICS Transaction Server for OS/390 environment:

```
KBH.R450.RUN(DFHCSDUP)
```

If you are upgrading from a previous BTB release, two input files to delete and remove the old definitions from the list are commented out in the job. These groups should exist in the CSD after the job has finished:

| Group | Contents |
|---|---|
| **KBA** | MailRoom components (add *after* your DataInterchange and Expedite/CICS groups). Also defines CICS transaction classes KBA*. If you increase the TRANCLASS *MAXACTIVE* value, you must also increase the *THRDA* and *THRDM* values in the CICS RCT. If you use protected threads, you must also increase the *THRDS* value. See also "Transaction classes" on page 81. The DCT-definitions of TD-queues are also included in the KBA group. See also "Destination Control Table (DCT)" on page 22. |
| **KBADPL** | Sample definition of client/server APIs as distributed program link (DPL) resources. This group is defined, but not added to the IMB list because parameters must be changed according to your requirements. |
| **KBAFCT** | VSAM file used for Applications Systems Control and Auditability (ASCA) logging, and other BTB file definitions. |
| **KBB** | All BEC definitions except CICS back-end components. |
| **KBBBE** | BEC CICS back-end components. |
| **KBC** | Signon and program-error-program (PEP) components. This group **must** follow the CICS-supplied default DFHPEP definition. |
| **KBF** | Local user administration from a workstation. |
| **KBG** | Sample and verification components. The DCT-definitions of TD-queues are also included in the KBG group. See also "Destination Control Table (DCT)" on page 22. |
| **KBH** | General BTB navigation components and transaction profile. The DCT-definitions of TD-queues are also included in the KBH group. See also "Destination Control Table (DCT)" on page 22. |
| **KBHDEBUG** | Components used for BTB debugging and service. |
| **KBHFCT** | BTB file definitions. |
| **KBHRCT** | BTB RCT definitions. See also "DB2 resource definition table (RCT)" on page 24. |

**KBI** Client/server infrastructure components and transaction profile. The DCT-definitions of TD-queues are also included in the KBI group. See also “Destination Control Table (DCT)” on page 22.

**KBIA2AFI** Client/server A2AIF file definitions.

**KBIA2AOP** Client/server A2AIF operation resources.

**KBIA2APR** Client/server A2AIF programs.

**KBICSCS** Client/server CIS-CSCS programs (BTB subset).

**KBIDPL** Sample definition of client/server APIs as DPL resources. This group is defined, but not added to the IMB list because parameters must be changed according to your requirements.

This group list should exist in the CSD after the job has finished:

| List | Contents |
|---|---|
| **IMB** | List that holds all BTB groups. This list can be either appended to the group list installed at CICS startup, or added to the GRPLIST parameter in the SIT. You can install up to four lists at CICS startup using the GRPLIST SIT parameter. |

**Note:** BTB installation procedures take advantage of program autoinstall.

However, these programs are explicitly defined using RDO:

EZACICSE
EZACIC25
KBAGS2P
KBASTCP
KBBTIPP
KBHDBGP
KBHELGP
KBITCPP

You must activate program autoinstall in your CICS systems by including this parameter in your SIT:

```
PGAIPGM=ACTIVE
```

For more details about CICS program autoinstall, refer to *CICS Transaction Server for OS/390 Resource Definition Guide*.

## BTB and MailRoom CICS transactions

These BTB transactions are defined:

*Table 4 (Page 1 of 2). BTB CICS transactions*

| Transaction | Description |
|---|---|
| KBB0 | BEC receive messages from IMS |
| KBBX | Sample CICS backend program for LU 6.2 |
| KBC1 | Sign-on panel |
| KBCX | Sign-on panel (for F4 RACF check) |
| KBHT | Timer |
| KBH0 | Menu navigation |

| *Table 4 (Page 2 of 2). BTB CICS transactions* | |
|---|---|
| **Transaction** | **Description** |
| KBH1 | Applications (with BEC) dynamic |
| KBH2 | Applications (administration) |
| KBH3 | Applications (monitoring) |
| KBH4 | Applications (not used) |
| KBH5 | Applications (not used) |
| KBH6 | Applications (not used) |
| KBHE | Scan for alert messages on ERRLOG table |
| KBHL | ERRLOG background transaction |
| KBHM | Extract CSP-RS error messages into ERRLOG |
| KBHN | Note formatter |
| KBI2 | BPI access via LU6.2 |
| KBIM | BPI access via DPL |
| KBIT | BPI access via TCP/IP |

These MailRoom transactions are defined:

| *Table 5 (Page 1 of 3). MailRoom CICS transactions* | |
|---|---|
| **Transaction** | **Description** |
| KBAA | DI acknowledgment scanner |
| KBAB | MQSeriesacknowledgment |
| KBAC | APPC source |
| KBAD | Group command |
| KBAE | Errors in TIE sent through MQSeries |
| KBAF | DI functional acknowledgment |
| KBAG | MQSeries source |
| KBAJ | TCP/IP source |
| KBAK | Priority selector kernel |
| KBAL | SAP R/3 source |
| KBAM | MQ source (Big documents) |
| KBAN | Send note to ISERROR |
| KBAO | SYSACK to SAP R/3 via TCP/IP |
| KBAP | Restart server |
| KBAQ | SYSACK server |
| KBAR | API DPL mirror transaction |
| KBAS | Scheduling scanner |
| KBAT | Overdue scanner |
| KBAU | Input scheduling scanner |
| KBAY | Rule value processor |
| KBA0 | CICS acknowledgment server |

| *Table 5 (Page 2 of 3). MailRoom CICS transactions* | |
|---|---|
| **Transaction** | **Description** |
| KBA1 | Recovery scanner |
| KBA4 | Batch acknowledgment scanner |
| KBA5 | Batch INIT document scanner |
| KBA8 | Autofail scanner |
| KBA9 | XMIT queue scanner |
| KBGL | Sample testing queue |
| KBGS | Sample SysAck |
| KBG2 | Sample COBOL write (not used) |
| KBG3 | Sample PL/I write (LTSQ) |
| KBG4 | Sample PL/I write |
| KBG5 | Sample PL/I read (LTSQ) |
| KBG6 | Sample COBOL read (not used) |
| KBG7 | Sample PL/I read |
| KBLA | APPC destination normal priority |
| KBLB | BATCH destination normal priority |
| KBLC | PGM-CICS destination normal priority |
| KBLD | DI-EDI destination normal priority |
| KBLE | EXP-DOC destination normal priority |
| KBLF | FAX destination normal priority |
| KBLG | PGM-BEC destination normal priority |
| KBLI | TIE-IMS destination normal priority |
| KBLK | Kernel normal priority |
| KBLL | EXP-FILE destination normal priority |
| KBLM | MAIL destination normal priority |
| KBLQ | MQ destination normal priority |
| KBLS | SAP destination normal priority |
| KBLT | TCPIP destination normal priority |
| KBL3 | SAP-MQ destination normal priority |
| KBL8 | DI-EDI preprocessing normal priority |
| KBKA | APPC destination high priority |
| KBKB | BATCH destination high priority |
| KBKC | PGM-CICS destination high priority |
| KBKD | DI-EDI destination high priority |
| KBKE | EXP-DOC destination high priority |
| KBKF | FAX destination high priority |
| KBKG | PGM-BEC destination high priority |
| KBKI | TIE-IMS destination high priority |
| KBKK | Kernel high priority |

| *Table 5 (Page 3 of 3). MailRoom CICS transactions* | |
|---|---|
| **Transaction** | **Description** |
| KBKL | EXP-FILE destination high priority |
| KBKM | MAIL destination high priority |
| KBKQ | MQ destination high priority |
| KBKS | SAP destination high priority |
| KBKT | TCPIP destination high priority |
| KBK3 | SAP-MQ destination high priority |
| KBK8 | DI-EDI preprocessing high priority |

These transactions can be used for problem determination:

| *Table 6. Problem determination CICS transactions* | |
|---|---|
| **Transaction** | **Description** |
| APIN | APPC *Ping* CICS from Windows or OS/2 |
| HCHK | Health check test panel |
| HUSR | Display active users |
| HTSQ | Display active TS queues |
| HVSM | Browse a VSAM data set |

Some DataInterchange and Expedite/CICS transactions are redefined to enable the products to invoke BTB programs written in CSP:

| *Table 7. DataInterchange and Expedite/CICS CICS transactions* | |
|---|---|
| **Transaction** | **Description** |
| EDIB | Redefine of DataInterchange transaction, enabling DataInterchange to invoke CSP programs (TWASIZE 1024) |
| IMR1 | Redefine of Expedite/CICS transaction, enabling Expedite/CICS to invoke CSP programs (TWASIZE 1024) |

These CIS-CSCS and A2AIF transactions are defined:

| *Table 8. Other CICS transactions* | |
|---|---|
| **Transaction** | **Description** |
| RCS2 | BPI access via CIS-CSCS (TWASIZE 1024) |
| RDTS | CSCS transaction |
| KBF1 | Client/server BTB Local User Administration (server transaction) |
| A2* | A2AIF transactions |

**Note:** All components are defined, whether you are going to use all the components or only the base components.

## CICS JCL

The DPAPLOAD data set must be allocated to DFHRPL early in the concatenation. TPCLOAD must also be allocated to DFHRPL. The DCT entries pointing to external files (SYSOUT) must be defined. When severe DB2 errors occur and it is impossible to write to the ERRLOG table (KBDTER), the access module writes to the **CEEMSG** DD name of your BTB CICS job. A DB2 plan in error can initiate this. JCL is provided in KBH.R450.CICS(KBHJCL) for the destination KBHMLOG.

For client/server implementation only

Sample JCL is provided in KBH.R450.CICS(KBIJCL) for the destinations A2ALOG and A2AERR, and for the the audit file KBIASCA. In a production environment you must add steps to your CICS job that dumps the ASCA data set either to a generation data set or to tape. After the dump the data set should be reset or reallocated to overwrite it with new data.

End of For client/server implementation only

All other files are defined through RDO definitions and need no names in the CICS JCL.

BTB requires LE/MVS run-time services. This means that SYS1.SCEERUN must be included in your CICS STEPLIB, and that SYS1.SCEECICS and SYS1.SCEERUN has to be included in the CICS DFHRPL (SYS1.SCEECICS must appear before SYS1.SCEERUN in the DFHRPL concatenation).

## CICS SIT

These are the SIT parameters required by BTB:

```
APPLID=CICSLUNM,          VTAM ACB name for the CICS system
GMTRAN=KBC1,              BTB good morning transaction
MN=ON,                    CICS monitoring active
MNPER=ON,                 Creating PERFORM SMF records
MXT=nn,                   Maximum tasks
PGAIPGM=ACTIVE,           Activate program autoinstall
SEC=YES,                  RACF security active
SECPRFX=YES,              Using CICS prefixing
SPOOL=YES                 CICS/JES2 interface active
```

**Parameter** **Explanation**

**APPLID** The VTAM application id that identifies the CICS system to the network. This is the APPLID that users log on to and that back-end IMS and CICS systems refer in the TERMINAL macros for ISC links.

**GMTRAN** This is the name of the *good morning* transaction that is automatically invoked whenever a terminal is connected to the CICS system.

**Note:** The *good morning* transaction MUST be *unprotected*. it can be run by anyone. It is the BTB sign-on transaction that verifies the authentication of the user through RACF and starts BTB.

**MN** This switches CICS monitoring on. You must switch on monitoring to collect the BTB accounting and statistics data.

**MNPER** MNPER activates the performance monitoring class (holding specific BTB data).

**MXT** Defines the maximum number of tasks, that can be attached at any time in the CICS region. Begin with maximum task setting of 40 and refer to *CICS Transaction Server for OS/390 Performance Guide*, if further adjustment is needed.

**PGAIPGM** This activates program autoinstall.

**SEC** This specifies that an external security package handles all authorization in the CICS system.

**SECPRFX** Indicates that all resources are prefixed with the CICS RACF user ID provided on the JCL JOB statement, when access authorization is queried in RACF. With this you can specify different access for your test, development, and production environments by using different user IDs in the three environments.

**SPOOL** Activates the interface to the Job Entry Subsystem (JES) spool. This is used for several functions where messages are sent via the JES spool.

If your are setting up new CICS systems in which to run BTB, you can use these initial settings for the dynamic storage areas:

```
DSALIM=4M,          DSA BELOW 16M
EDSALIM=96M,        DSA ABOVE 16M
```

Refer to the CICS library for more information about dynamic storage settings.

Follow your local standards and guidelines for the remaining SIT parameters.

# Destination Control Table (DCT)

Both the MailRoom and the client/server infrastructure need intrapartition destinations defined.

The DCTs are now defined through RDO, and the following transient data resources can be manged:

- Intrapartition
- Extrapartition
- Indirect
- Remote

## MailRoom DCT definitions

The DCT definitions are included in the RDO-group below.

```
KBA         * MailRoom components.
KBG         * Sample and verification components.
```

## BTB common functions

When errors occur, either in BTB or in the application, a TD queue is setup to receive a record with error information. This queue is then processed by a transaction that writes the error information to a DB2 table.

When e-mail is sent from BTB it is logged in a TD queue, referenced by DD name KBHMLOG in the CICS job. For more information see also “The mail transmission log (KBHMLOG)” on page 54

The DCT definitions are included in the RDO-group below.

```
KBH         * General IMB navigation components.
```

### Client/server DCT definitions

For client/server implementation only

The DCT definitions are included in the RDO-group below.

```
KBI        * Client/server infrastructure components.
```

End of For client/server implementation only

See also “RDO update job” on page 15.

## Program Load Table Initial (PLTI)

If you want to use the MailRoom or the client/server connectivity, you must modify the PLTI table. A transaction scheduler is a central part of BTB MailRoom. It periodically starts various transactions and is loaded when CICS is started, using the PLTI. A copybook with the required entries is supplied and you include this in your PLTI:

```
COPY KBHPLTI       * IMB TIMER
```

Expedite/CICS has extra PLTI entries which should already have been defined. It starts Expedite/CICS when the CICS is initialized. Check that this was implemented during installation of Expedite/CICS.

For client/server implementation only

Client/server support must be initiated at CICS startup. Add this statement to the PLTI:

```
COPY KBIPLTI       * IMB client/server support initialization
```

End of For client/server implementation only

## Program Load Table Shutdown (PLTS)

You stop the timer by adding this to the PLTS table:

```
COPY KBHPLTS       * IMB TIMER SHUT DOWN
```

## Inter-system communication (ISC) link definitions

This provides a front-end for IMS and CICS back-end applications. An ISC link must be established between the BTB front-end CICS system and each of the back-end systems. The terminals are defined using these commands:

```
CEDA DEFINE CONNECTION
CEDA DEFINE SESSIONS
```

### RDO sample

The sample is in KBH.R450.CICS(KBBTCTRD). This member is not included in the sample RDO definition job DFHCSDUP, as it must be customized before use. However, you can modify a copy of DFHCSDUP to create a batch job that defines the connection and terminal entries. This sample provides two logical terminals to IMS. You can duplicate the entries to get more parallel sessions. If you do, the **TRMIDNT** IMS entries and the related **NETNAMQ** CICS entries must match and

must be changed in the duplicate entries. You might also need to change the VTAM definitions.

The TCT entries for a CICS-CICS LU 6.1 ISC link are the same as the samples for IMS. In the front-end, the NETNAME parameter should point to the back-end CICS VTAM LU name, and in the back-end, the NETNAME parameter should point to the front-end VTAM LU name.

### Terminal definition for IE

The IE connection for Expedite/CICS is an LU 6.2 definition. A sample definition is provided with BTB in KBH.R450.CICS(KBATCTRD).

## Monitoring Control Table (MCT)

You need not define an MCT, as the appropriate definitions can be included in the SIT.

If you want to define an MCT, the BTB Event Monitor Points (EMPs) are defined in the MCT table and must be the first TYPE=ENTRY entries in the MCT table source. If you do not have an MCT, you must create one to enable the BTB monitoring facility.

To define and enable BTB accounting and statistics add this MCT source after the TYPE=INITIAL macro:

```
COPY KBHMCT            * BTB monitoring
```

**Note:** Do not change the contents of the KBHMCT COPYBOOK.

## DB2 resource definition table (RCT)

The DB2 definitions are now online and can be set up using CEDA. There will be one DB2 connection definition for each DB2 subsystem which the CICS region needs to connect to (typically only one), with DB2 entries and DB2 transactions defined. These can be viewed by using the following CICS commands:

```
CEMT I DB2Conn
CEMT I DB2Entry
CEMT I DB2Tran
```

The CICS DB2ENTRY defines resources to be used by a specific CICS transaction, or a group of transactions, when using the CICS DB2 interface. The CICS DB2TRAN resource definition defines additional transactions to be associated with a particular DB2ENTRY.

A sample RCT (CICS RDO DB2 defintions) copybook for BTB is supplied in KBH.R450.CICS. For details about the SQLID used in the DB2ENTRY (AUTH=) see “DB2 user IDs as BTB SQLID (optional)” on page 12. The userid must be defined so you can access DB2 from CICS, TSO, and batch, using the (restricted) ID if you choose to define aliases for the BTB DB2 tables. If required, modify the supplied sample included in your RDO group:

```
KBHRCTRD   * CICS RDO DB2 DEFINITIONS FOR IMB
```

The samples use BTB general prefix *KBH* as CICS SQLID in the AUTH parameter. See also “RDO update job” on page 15.

There is also no longer any need for PLT processing for the CICS-DB2 link, as CICS can acquire the DB2 connection at startup by setting SIT parameter DB2CONN to YES. CICS shutdown processing automatically disconnects from DB2 if a connection has been made.

## DataInterchange plans in the RCT

If you installed DataInterchange to exploit DB2, a DataInterchange plan for CICS was defined in the RCT, called DIENU*nn*C, depending on your version of DataInterchange. The DataInterchange plan must be extended to hold the necessary DBRMs from the MailRoom programs. The plan EDIPLAN provided with BTB and bound with the KBH.R450.RUN(IMBIND) sample job, must be defined in the RCT in place of the default DataInterchange plan (DIENU*nn*C). See also "RDO update job" on page 15.

For client/server implementation only

## Adapting CIS-CSCS for BTB

A subset of load modules are provided in KBH.R450.TPCLOAD and the RDO definitions of programs and transactions are included in the KBICSCS group.

You must load the VSAM file CSDS (CSDS Directory) before you can use CIS-CSCS. The sample data for CSCS provided in KBH.R450.UTIL(CSCSDATA) is sufficient to launch CSCS.

## Adapting A2AIF for BTB

A subset of A2AIF is delivered with BTB.

The data to initially load the A2AIF VSAM files is in KBH.R450.UTIL:

**A2AARID** Defines the VSAM data set KBH.R450.ARID, which holds the A2AIF Routing Information Directory.

**A2ANODE** Defines the VSAM data set KBH.R450.NODE, which holds the A2AIF CONNECTION/NODEID Directory.

**A2AUSER** Defines the VSAM data set KBH.R450.USER, which holds the A2AIF CICS user ID to remote user ID directory.

### Job to create and load the client/server VSAM data sets

**KBIDEFDS** A skeleton job in KBH.R450.RUN to define and load the CIS-CSCS directory based on KBH.R450.UTIL(CSCSDATA) and the A2AIF data sets, ARID, NODE and USER.

End of For client/server implementation only

## Establishing CICS back-end environment

The back-end CICS is defined the same as the front-end. You can use an existing CICS as back-end, or you can set up a new one. A RDO group definition is made specifically to hold just the CICS back-end definitions. The input source for the RDO utility (DFHCSDUP) is in KBH.R450.CICS(KBBBERDO). The BEC uses the same LU6.1 protocol for CICS-to-CICS communication as for CICS-to-IMS

communication. The TCT definitions are the same in the CICS front-end and the CICS back-end.

## Defining the VSAM data sets

Run the jobs described here to define these BTB VSAM data sets:

| | |
|---|---|
| **KBAASCA** | The BTB ASCA data set |
| **KBAHOT***xx* | The MailRoom hot buffer data sets |
| **KBAMQSRF** | The MQSeries support data set |
| **KBHVS***nnn* | The 32K-support data sets |

## Defining the KBAASCA data set

Customize and run KBH.R450.RUN(KBAASCA).

**Note:** The KBAASCA VSAM data set is updated by BTB. If you need to create, for example, daily ASCA reconciliation reports, customize and run KBH.R450.RUN(KBASCDAY).

To offload and recreate the KBAASCA data set, run the corresponding KBH.R450.RUN(KBASCPER) job. This can be done on a regular basis when BTB is not running.

## Defining the MailRoom hot buffer data sets

Customize and run KBH.R450.RUN(KBAHOTBF).

**Note:** To improve the performance of MailRoom registrations, three buffers have been introduced which hold the most recently used information. The buffers are implemented using CICS-maintained data tables. The maximum size of the buffers can be altered during installation. If a buffer becomes full, an automatic buffer compression routine is invoked to remove the 25% least-used entries in the table, and an information message is written to the BTB system error log.

If more than one CICS system is using the same set of registration tables, a partial cleanup can be performed in up to six remote CICS regions. This requires the CICS regions to be APPC-connected. Remote buffer cleanup is activated by the *REMOTE-MAILROOM* entry in the Working Criteria (WC) table (see “Customizing the Working Criteria (WC) table” on page 45).

## Defining the MQSeries support data set

Customize and run KBH.R450.RUN(KBAMQSRF). The KBAMQSRF data set is for the support of documents in the MQ source scenario that contain more than 1000 records. If a document contains more than 1000 records, the KBAG transaction writes records to KBAMQSRF and then starts transaction KBAM. The KBAM transaction reads records from KBAMQSRF and inserts them into the MailRoom tables. KBAMQSRF can be used by more than one task at a time.

**Note:** Consider tuning this data set in these areas:

- Adjust the number of index buffers to allow the entire index to be kept in storage.
- Adjust the space allocation to ensure that the data set can hold the total number of *concurrent* messages.

## Defining the 32K-support data sets

Customize and run KBH.R450.RUN(KBHVSAMP).

**Note:** The KBHVS*nnn* data sets are for the support of documents that are larger than 32K. When a document is larger than 32K, BTB switches to use one of these VSAM entry-sequenced data sets (ESDSs). The data sets belong to a dynamically allocated and freed pool of ESDS data sets. If all data sets are in use, the transaction will wait and performance will be degraded (an alert will be issued).

BTB delivers six data set definitions. To change the number of data sets used by BTB, you must first create the data sets, and then define them to CICS. You then use the WCEDIT fastpath command to update the *VSAM FILES KBH* entry in the WC table (see "Customizing the Working Criteria (WC) table" on page 45).

# Establishing the IMS back-end environment

This section assumes you have IMS already installed, and this information describes how you can adapt your IMS system to function as a back-end server for BTB front-ends. If the MailRoom is to be used, it is assumed that the definitions for the back-end communication are completed.

## IMS system generation

The copybooks referred to here are in KBH.R450.IMS. Allocate the KBH.R450.IMS data set to SYSLIB in your IMS generation job.

A skeleton job for program specification block (PSB) generation is provided in RUN member IMPSB. IMMFSCMP is a message format service (MFS) compile of the BEC support.

## Adapting the supplied IMS copybooks

You must modify the members in KBH.R450.IMS as required.

## IMS LU 6.1 access

Transaction routing between CICS and IMS can be handled by ISC or MQSeries. This section describes ISC routing.

ISC is part of the IMS DC feature and is based on the LU type 6.1 protocol (APPC).

To include ISC support in the IMS on-line system an IMS NUCLEUS generation is needed.

These IMS DC macros are used in BTB:

```
         TYPE UNITYPE=LUTYPE6
*
         TERMINAL NAME=CICSLUNM,           <<< PARTNER CICS LU NAME    X
               SEGSIZE=3072,                                           X
               OUTBUF=3072,                                            X
               SESSION=2,                  <<< CORRESPOND TO CICS TCT  X
               COMPT1=(SINGLE1,DPM-B1,IGNORE)
*
         VTAMPOOL
*
         SUBPOOL NAME=BE01                 <<< CORRESPOND TO CICS TCT  X
            NAME FKBE001,                      AND SESSION PARM.       X
            COMPT=1,ICOMPT=1
*
         SUBPOOL NAME=BE02                 <<< CORRESPOND TO CICS TCT  X
            NAME FKBE002,                      AND SESSION PARM.       X
            COMPT=1,ICOMPT=1
```

Some of these parameters are related to parameters defined in CICS. For details, refer to *CICS Transaction Server for OS/390 Intercommunication Guide*.

Here is a summary:

## TERMINAL macro

**NAME** The VTAM ACB name for the partner CICS (BTB front-end). This is the APPLID defined in the CICS SIT.

**SESSION** On the TERMINAL macro, two sessions are defined. You can extend this to four parallel sessions for performance reasons. This will expand the TERMINAL control blocks into 4 CLB/CTBs. To use all four sessions, four SUBPOOLs must be defined.

**COMPT1** DPM-B1 allows for optional use of MFS. The current BTB system contains MFS and non-MFS applications.

The COMPT and ICOMPT keywords on the NAME macros refer to this component.

**OUTBUF** TERMINAL macro. This value must match the Receivesize on the RDO SESSION definition.

## SUBPOOL macro

**NAME** The names of the SUBPOOLs must match the NETNAMEQ parameter in the RDO TERMINAL definition.

The sessions are automatically established by CICS during CICS startup and are shared between CICS application programs.

The number of sessions (2–255) has performance implications. You must define enough sessions to prevent CICS application programs from waiting for a free session. See Chapter 7, “Performance, tuning, and maintenance” on page 81 for details about tuning. The sample here is in the KBH.R450.IMS library and can be included by adding this to your source:

```
COPY KBBLU61
```

### IMS COMM macro for BTB

```
        COMM RECANY=(12,3842),      <<< ALIGN WITH CICS TCT BUFFER+22 X
             APPLID=IMSLUNME,       <<< IMS VTAM LU NAME              X
             OPTIONS=(TIMESTAMP,8192,FMTMAST,VTAMAUTH),               X
             MFSEXIT=(0,126),                                         X
             EDTNAME=ISCE,                                            X
             AOEXIT=YES
```

Relevant keywords are:

**RECANY** The size of the receive-any buffers should be equal to CICS RDO TERMINAL Receivesize + 22.

**APPLID** This is the VTAM ACBNAME for this IMS system. This is the name defined in CICS RDO Connection NETNAME.

**EDTNAME** ISCE is an alias of ISCEDT. It is not directly relevant to BTB, but applies to ISC sessions using the asynchronous (START/RETRIEVE) interface. EXEC START command parameters are limited to four characters.

The sample shown here is in KBH.R450.IMS and can be included by adding this to your source:

```
COPY KBBCOMM
```

## MailRoom IMS transactions

MailRoom uses these IMS transactions:

**KBAXSA0** BTB MailRoom IMS TIE system acknowledgement

**KBAXTR0** BTB MailRoom IMS TIE read

**KBAXTW0** BTB MailRoom IMS TIE write

**KBAXMR0** BTB MailRoom IMS TIE read and send via MQSeries.

**KBAXMW0** BTB MailRoom IMS TIE write from MQSeries.

Add this to your IMSGEN source:

```
  COPY KBAGEN        * IMB MailRoom IMS transactions
  COPY KBAGEN2       * IMB MailRoom IMS transactions for TIE-MQ scenario
```

BTB uses these IMS transactions:

**KBHXPI0** BEC IMS *ping* transaction

**KBHELI0** BTB error logging pipe to CICS

**KBHELM0** BTB error logging via MQSeries

Add this to your IMSGEN source:

```
  COPY KBHGEN        * IMB General IMS transactions
  COPY KBHGEN2       * IMB General IMS transactions for TIE-MQ scenario
```

## Program specification block (PSB) generation

PSBs must be generated before IMS MailRoom transactions can work. IMPSB is a job provided to generate PSBs. Here is a list of the PSBs for the transactions described in “MailRoom IMS transactions” on page 29:

**KBAXSAP0** BTB MailRoom IMS TIE system acknowledgement

**KBAXTRP0** BTB MailRoom IMS TIE read

**KBAXTWP0** BTB MailRoom IMS TIE write

**KBAXMRP0** BTB MailRoom IMS TIE read and send to MQSeries

**KBAXMWP0** BTB MailRoom IMS TIE write from MQSeries

**KBHXPIP0** BEC IMS *ping* transaction

**KBHELIP0** BTB error logging pipe to CICS

**KBHELMP0** BTB error logging via MQSeries

The KBA* PSBs are for MailRoom only. Omit them if you do not use the MailRoom.

## MFS FORMATs for back-end communication

To support communication between BTB and IMS, MFS must be compiled for the format in:

```
KBH.R450.MFS(KBB0ISC)
```

If your organization does not have procedures for generating MFS formats, you can use the sample provided in:

```
KBH.R450.RUN(IMMFSCMP)
```

The resulting format is saved in:

```
KBH.R450.TFORMAT
```

## Application definitions

Each back-end application must be defined to IMS.

## TIE definitions required when using TIE Read.

To ensure that incoming interfaces via TIE are not lost in an error situation, these TIE definitions are required:

- Application STOP.
- One BTX under this application for each TIE Read transaction you will use, including the TIE Read for MQSeries transaction. The name of the BTX is *BTXKBAX**x**R0*, where x is 'T' for standard TIE Read, and 'M' for TIE Read for MQSeries. If you have implemented clones of the standard TIE Read transaction you must also create BTXs for these, for example BTXKBAXTRA and BTXKBAXTR9.
- In the BTX Operational Controls for each BTX, enter one line per country from which you expect to receive data.

  For each line, enter:

  – S, to STOP the BTX (essential)

  – A, for audit (recommended)

  - Under TIP Tran, the name of the transaction this BTX will handle, for example, if the BTX is called BTXKBAXTR0, the transaction will be called KBAXTR0.
- Authorise each country that BTX Operational Controls, for use by IMS/VS (all user IDs).

For more information about using TIE definitions, refer to the *Application Programming Guide*.

# Special MQSeries definitions

## MQSeries IMS Trigger Monitor

For the TIE-MQ destination scenario it is necessary to have the IMS trigger monitor CSQQTRMN running in MQSeries. Information about this is available in the MQSeries Application Programming Guide.

## MQSeries Batch Trigger Monitor

If you are using the Batch MQSeries Read Utility you may want to set up an MQSeries Batch Trigger Monitor, so that the job runs automatically upon arrival of a message on the MQSeries queue. You can use the MQSeries support pack MA12 Batch Trigger Monitor to trigger your job:
`http://www-4.ibm.com/software/ts/mqseries/txppacs/ma12.html`

Alternatively you can use OPC to schedule your job frequently enough to service the queue.

# Making the VTAM definitions

For connection to the user terminals, BTB does not need any special VTAM definitions. However a VTAM APPL macro must be included for the CICS system where BTB runs.

**Note:** No sample files are delivered with the BTB package. The samples in this book are for guidance only.

This task is fully described in the *CICS Transaction Server for OS/390 System Definition Guide*, and the *CICS Transaction Server for OS/390 Installation Guide*.

Here is a sample VTAM APPL macro definition for an BTB CICS system:

```
         VBUILD TYPE=APPL
CICSAPL  APPL  AUTH=(ACQ,VPACE),ACBNAME=CICSLUNM,MODETAB=MODEISC,      X
               PARSESS=YES,SONSCIP=YES,VPACING=10,EAS=100
```

The ACBNAME must be the same as the APPLID in the CICS system initialization table (SIT).

IMS/CICS ISC uses the VTAM LU 6.1 protocol. The APPL macro shown for terminal access is also used for ISC links. LU 6.1 LOGMODE must be defined in the table that indicated by MODETAB.

Here is a sample IMS application major node for ISC/LU 6.1:

```
         VBUILD TYPE=APPL
LU61NAME APPL  AUTH=(ACQ,PASS),ACBNAME=IMSLUNME,MODETAB=MODEISC,     X
               PARSESS=YES,VPACING=10,EAS=600
```

The MODETAB keyword refers to the following modetable, which describes the LOGMODEs for the ISC communication:

Here is a sample MODETAB for an ISC IMS-CICS link:

```
MODEISC  MODETAB
         MODEENT LOGMODE=IMSPARS,COS=IMSISC,                           C
               FMPROF=X'12',TSPROF=X'04',PRIPROT=X'B1',                C
               SECPROT=X'B1',COMPROT=X'70A0',RUSIZES=X'8686',          C
               PSNDPAC=X'01',SRCVPAC=X'01',SSNDPAC=X'01',TYPE=X'00',   C
               PSERVIC=X'060038000000380000000000'
CICSLU62 MODEENT LOGMODE=CICSLU62,TYPE=0,COS=ROUTM001,                 C
               FMPROF=X'13',TSPROF=X'07',PRIPROT=X'B0',                C
               SECPROT=X'B0',COMPROT=X'50B1',RUSIZES=X'8587',          C
               SSNDPAC=X'02',SRCVPAC=X'02',PSNDPAC=X'02',              C
               PSERVIC=X'060200000000000000102000'                     C
         MODEEND
         END
```

You need not have a specific MODETAB for the ISC link. However, you must include an LU 6.1 definition as shown here in a MODETAB that is in use and specified in the MAJNODE definition.

For details for the VTAM macros, refer to *Advanced Communications Function for VTAM Installation and Resource Definition*.

## Setting up DB2

This section describes how to set up a DB2 environment for BTB. Statements are delivered in KBH.R450.SQL for creation of all the DB2 tables. There are also several jobs in KBH.R450.RUN and accompanying input members in KBH.R450.SQL for creation of the tables.

### DB2 plan for DSNTEP2 program

The supplied procedure KBHDB2 uses the DB2 utility DSNTEP2. If you already have a DB2 plan for DSNTEP2, modify the KBHDB2 procedure to point to that plan.

Otherwise, a sample BIND input is provided with the package to BIND a plan for DSNTEP2. The plan is called KBHDB2. You can extract the step in the IMBIND job that deals with KBHDB2 and create a job to BIND KBHDB2. You must provide a plan for DSNTEP2 to be able to run the supplied jobs.

## Adapt SQL members to your environment

## General

These members might have different names at your organization:

**ZSQLID** In the sample provided with the package, this issues a SET CURRENT SQLID = *KBHTEST* which become the SQL CREATOR ID of all the tables. This should be the TSO RACF user ID used for the installation tasks.

**ZSQLID2** Issues a SET CURRENT SQLID = *KBH*. This is the CICS SQLID. It is used when the ALIASes are created.

**Note:** *nnn* in the following descriptions refers to a group of members, each creating a table and tablespace, a view of the table and the required indexes. These members have the same name as the table they create.

**BTB trading partner registrations (KAF)**

**KAFGS01** Creates storage groups for tables and indexes for KAF tables.

**KAFD001** Creates the database for the KAF tables.

**KAFT***nnn* Create the KAF tables and views necessary for BTB. These members need not be modified.

**KAFGRANT** Grant access for BTB to the KAF tables. Modify the CICS SQLID

**KAFALIAS** Creates ALIASes owned by BTB SQLID for all the KAF tables. Modify the CREATOR SQLID if not KBH.

**BEC registrations (KBB)**

**KBBGS01** Creates storage groups for tables and indexes for back-end communication.

**KBBD001** Creates the database for the BEC.

**KBBT***nnn* Create the BEC control tables. No modification needed.

**KBBGRANT** Grant access for BTB to the BEC tables. Modify the CICS SQLID.

**KBBALIAS** Creates ALIASes owned by BTB SQLID for all the BEC tables. Modify the CREATOR SQLID.

**BTB common registrations (KBD)**

| | |
|---|---|
| **KBDGS01** | Creates storage groups for tables and indexes for BTB (no modification needed). |
| **KBDD001** | Creates the database for general BTB tables (no modification needed). |
| **KBDT***nnn* | Create the BTB tables (no modification needed). |
| **KBDGRANT** | Grant access for BTB to the BTB tables. Modify the CICS SQLID. |
| **KBDALIAS** | Creates ALIASes owned by BTB SQLID for all the BTB tables. Modify the CREATOR SQLID. |

If you are running the TIE-MQ scenario then you will also need to create the KBDTMT table which is used by the IMS transactions for TIE read and write for MQSeries.

This table must be created on the DB2 system where IMS is running.

**BTB remote definitions for TIE-MQ scenario**

| | |
|---|---|
| **KBDG002** | Creates storage groups for table KBDTMT. |
| **KBDD002** | Creates the data base for table KBDTMT. |
| **KBDTMT** | Creates table KBDTMT. |
| **KBDGRAN2** | Grants access to the KBDTMT table. |
| **KBDALIA2** | Creates alias for remote TIE-MQ table. |

### BTB grant to plans:

**Grant to plans**

| | |
|---|---|
| **KBHGRANT** | Grants EXECUTE to all plans for CICS SQLID (optional). |
| **KBHGRAN1** | Grants EXECUTE to all IMS BTB plans for the TIE-MQ scenario |

### Day-to-day operation

**Client/server implementation only**

| | |
|---|---|
| **KBDUPVBN** | Uses KBH.R450.RUN(KBDUPVBN) to build the PWS access lists for the registered users. |

## Create the DB2 tables and aliases

When the SQL members are customized, jobs are prepared to create the tables and aliases and setup access. These are described later in “Establishing the DB2 environment” on page 39.

## Initial data for the DB2 tables

Data that is prepared to be initially loaded into some of the tables, is included in the package. Some of the data sets should be adapted before they can be loaded, to allow you initial access to BTB (your user ID should be known to BTB). The WC table can be modified from within BTB. However this editor requires the table to contain initial data. You **must not** edit KBH.R450.KBDTWC before loading it.

## Unload data sets

The data sets are KBH.R450.*tablename*:

### KAF tables

```
KBH.R450.KAFT01        KBH.R450.KAFT06
KBH.R450.KAFT09        KBH.R450.KAFT13
KBH.R450.KAFT20        KBH.R450.KAFT25
KBH.R450.KAFT35        KBH.R450.KAFT39
```

### BEC control tables

```
KBH.R450.KBBTAPL       KBH.R450.KBBTDTY
KBH.R450.KBBTERR
```

### BTB tables

```
KBH.R450.KBDTAB        KBH.R450.KBDTAC
KBH.R450.KBDTAG        KBH.R450.KBDTAO
KBH.R450.KBDTAS        KBH.R450.KBDTBA
KBH.R450.KBDTBP        KBH.R450.KBDTBS
KBH.R450.KBDTEA        KBH.R450.KBDTMS
KBH.R450.KBDTOP        KBH.R450.KBDTPB
KBH.R450.KBDTPO        KBH.R450.KBDTPR
KBH.R450.KBDTRA        KBH.R450.KBDTRL
KBH.R450.KBDTRV        KBH.R450.KBDTSA
KBH.R450.KBDTSD        KBH.R450.KBDTSE
KBH.R450.KBDTSH        KBH.R450.KBDTSUN
KBH.R450.KBDTSV        KBH.R450.KBDTSX
KBH.R450.KBDTUA        KBH.R450.KBDTUP
KBH.R450.KBDTUS        KBH.R450.KBDTWC
KBH.R450.KBDTXM        KBH.R450.KBDTXT
```

There are more tables than data sets because the load data provided is the minimum needed to run BTB. Some of the tables are work tables, where the contents are either built dynamically when used by BTB, or log tables, where events are logged. All references should be resolved when the KBDLOAD job has ended.

To avoid potential performance problems, you are recommended to add 500 dummy rows to the KBDTTI table with the KBDTTILD job. The dummy rows are in unload dataset:

```
KBH.R450.KBDTTI.
```

## Preparing the data for loading

Some of the tables need the correct data for BTB to be operational when it is first run. Others can only be modified via the unloaded data sets by using a DB2 editor, for example QMF.

### The USer (US) table.

The supplied user table contains only the IMADM, IMUSER and IMUSER2 user IDs in KBH.R450.KBDTUS. If you are not using IMADM, you must add the user ID that you plan to use as Central Administration user, to data set KBH.R450.KBDTUS. Do this by changing IMADM in the line present, or by adding a new line using the IMADM as model. Do not to change any fields in records other than that containing the user ID.

## Modifying the LOAD control data sets

Modify these control data sets:

**KBH.R450.KAFCNTRL**
Controls load of KAF tables.

**KBH.R450.KBBCNTRL**
Controls load of back-end communication (KBB) tables.

**KBH.R450.KBDCNTRL**
Controls load of BTB (KBD) tables.

## Loading the tables

Jobs are provided to load the tables when the customization is complete. These are described later in “Establishing the DB2 environment” on page 39.

The control data sets are set up with the LOG YES option. This means that logging is carried out during the load. If you switch to LOG NO, an image copy of the tables must be made after the load, to make the tables operational.

## Creating the collections and binding the BTB packages

BTB needs this collection for the run-time environment:

**KBHL** BTB DB2 collection.

The input to add packages to this collection is in KBH.R450.BIND(IMBNDPKG). All packages are enabled for the environment they are designed to function in.

Modify BIND member IMBNDPKG as described in the IMBINDPA run member.

If the TIE-MQ scenario is to be used, one more collection has to be created on the *remote* DB2 system where IMS runs. It is recommended you use collection name KBHL. Modify BIND member IMBNDPK1 and submit RUN member IMBINDPA using this BIND member as input to the bind package job.

## DB2 packages for DataInterchange

To allow a *DB2 packages only* environment, BTB provides a job and BIND input to bind all the DataInterchange data base request modules (DBRMs) as packages. The collection for DataInterchange is:

**EDIL** DataInterchange DB2 collection

The input to add packages to this collection is in KBH.R450.BIND(EDIBNPKG). Modify this BIND member as required. Follow the instructions in RUN member IMBINDPA.

## Adapting the plans

All DB2 access in BTB and in the MailRoom is static SQL, so you must BIND some DB2 plans. The control cards for the binds are in KBH.R450.BIND.

Modify the DB2 subsystem name (SSID), owner (KBHTEST) and CICS LU-name (*CICSLU*) to your local naming standards.

**General BTB plan**

**KBHPLAN** BTB main plan, used for all CICS transactions in BTB.

If you do not want to use DataInterchange with BTB you must remove this line from the KBHPLAN input:

```
EDIL.*   +
```

**On-line help plan**

**KBHLMHP** BTB on-line help batch load program.

**BTB MailRoom & DataInterchange plan for CICS**

To implement MailRoom, you must also bind this plan:

**EDIPLAN** DataInterchange plan. EDIPLAN is adapted for DataInterchange use with BTB by adding some BTB packages to the DataInterchange plan. You must change the RCT entries for DataInterchange to point to EDIPLAN instead of DIENU*nn*C. (see “DataInterchange plans in the RCT” on page 25 for more details).

**BTB MailRoom plans for batch**

These plans are needed for the batch scenarios:

**KBADBRP** Batch destination scenario plan.

**KBASBWP** Batch source scenario plan.

**ASCA reconciliation plans**

**KBAASCA** MailRoom ASCA reconciliation.

**KBAMTEP** Plan for the program that reads ASCA log records and inserts them into the DB2 ASCA table.

**KBAMTFP** ASCA reconciliation.

**IMS plans**

| | |
|---|---|
| **KBAXTRP** | MailRoom TIE agent (TIE read). |
| **KBAXTWP** | MailRoom TIE agent (TIE write). |
| **KBHELIP** | BTB IMS error log agent. |
| **KBHXPIP** | BTB IMS *ping* program. |
| **KBAXMRP0** | IMS TIE-READ (IMS to MQ driver). |
| **KBAXMWP0** | IMS TIE-WRITE (MailRoom TIE-IMS destination). |
| **KBHELMP0** | Common error log (get IMS message and send to MQ) |

Client/server implementation only

**Client/server support plans**

| | |
|---|---|
| **KBIA2AP** | Plan used for all Client/server application support functions.<br><br>**Note:** As delivered this plan only holds the DBRMs necessary for the basic infrastructure and verification to work. Extra DBRMs must be added to the plan if there is application code involved with DB2 access. |

End of Client/server implementation only

**Sample program plans**

The sample programs use the common BTB plan.

**KBHDB2 utility**

| | |
|---|---|
| **KBHDB2** | This is used in the JCL procedure KBHDB2 as the plan for DB2 utility program DSNTEP2. If you already have this plan, change the KBHDB2 procedure in KBH.R450.PROCLIB and omit the bind for KBHDB2. |

## Updating the DB2 catalog

Before binding the BTB packages and plans, run STOSPACE on all tablespaces. Then run RUNSTAT on the tables not already processed by RUNSTAT. This ensures that the DB2 catalog statistics reflect the contents of the tables when you BIND the packages. No sample jobs are provided—use the procedures you have in place at your organization.

## Creating the KBHL collection

Before you can bind the BTB DB2 packages, the collection KBHL must first be created.

## PACKADM authority

You need PACKADM with GRANT authority to KBHL.* to bind the packages in KBHL and to later grant EXECUTE on all the packages to KBH (the CICS SQLID and plan owner).

To use DataInterchange you must also create the DataInterchange collection EDIL. You need PACKADM with GRANT authority to EDIL for this.

## Establishing the DB2 environment

These are the **jobs** needed to establish the DB2 setup. They are listed in the order in which they must be run and are in KBH.R450.RUN.

### BTB Trading Partner registrations

**KAF tables**

| | |
|---|---|
| **KAFCRTBL** | Creates all the KAF tables. |
| **KAFALIAS** | Creates all the ALIASes for CICS SQLID (optional). |
| **KAFGRANT** | Grants access to KAF tables for CICS SQLID (optional). |
| **KAFLOAD** | Loads initial contents in the subset KAF tables. |

**Note:** Do not change the order in which the tables are loaded, or the contents of the unloaded data sets apart from the changes described here. All references are resolved in the unloaded data.

**BEC tables (KBB)**

| | |
|---|---|
| **KBBCRTBL** | Creates all the BEC tables. |
| **KBBALIAS** | Defines the aliases for BEC tables for CICS SQLID (optional). |
| **KBBGRANT** | Grants access to BEC tables for CICS SQLID (optional). |
| **KBBLOAD** | Loads initial contents in the BEC tables. |

**BTB common registration tables (KBD)**

| | |
|---|---|
| **KBDCRTBL** | Creates all the base BTB tables. |
| **KBDALIAS** | Creates all the aliases for CICS SQLID (optional). |
| **KBDGRANT** | Grants access to BTB tables for CICS SQLID (optional). |
| **KBDLOAD** | Loads initial contents in the basic BTB tables. |
| **KBDTTILD** | Loads dummy rows into the BTB MailRoom DB2 table KBDTTI. |

**Note:** Do not change the order in which the tables are loaded, or the contents of the unloaded data sets apart from the changes described here. All references are resolved in the unloaded data.

**Optional DataInterchange tables:**

| | |
|---|---|
| **EDIALIAS** | Creates aliases for DataInterchange Version 3 Release 1 tables. |
| **EDIGRANT** | Grants access to DataInterchange tables for CICS SQLID. |

**Optional TIE-MQ scenario table**

| | |
|---|---|
| **KBDCRTB2** | Creates the remote TIE-MQ table KBDTMT. |
| **KBDALIA2** | Creates an alias for view KBDVMT. |
| **KBDGRAN2** | Grants access to the view KBDVMT. |

## Running RUNSTAT and STOSPACE

Run RUNSTAT and STOSPACE against all the tablespaces and storagegroups.

## Binding the packages

The IMGRANT job grants EXECUTE access to KBHL* for KBH. Modify KBH.R450.SQL(EXEGRANT) if you use another SQLID for CICS (and plan owner or prefix) than KBH.

This job binds the BTB packages:

**Bind of BTB packages**

| | |
|---|---|
| **IMBINDPA** | Bind of all the BTB packages in the KBHL collection. |

This job is in KBH.R450.RUN.

To BIND packages individually, extract the control information you need from BIND member IMBNDPKG.

**Bind of DataInterchange packages**

| | |
|---|---|
| **IMBINDPA** | Bind of all the DataInterchange Version 3 Release 1 packages in the EDIL collection. |

Use BIND member EDIBNPKG as input to this job.

**Bind of TIE-MQ scenario package**

| | |
|---|---|
| **IMBINPA1** | Bind the KBAXMTM package on the remote DB2 system. |

BIND member IMBNDPK1 is used as input to this job.

### Binding the plans

This job binds the BTB plans:

| Bind of BTB plans | |
|---|---|
| **IMBIND** | Bind of all BTB plans, including the DataInterchange plan. |

This job is also in KBH.R450.RUN. To BIND the plans individually, extract the steps you need from IMBIND.

| Bind of TIE-MQ scenario plans | |
|---|---|
| **IMBIND1** | Bind three plans on the remote DB2 system where IMS/TIE runs. |

### BTB grant execute to plans

This job grants EXECUTE access to the plans:

| Grant EXECUTE to plans | |
|---|---|
| **KBHGRANT** | Grants EXECUTE to all plans for CICS SQLID (optional), batch user ID, and IMS logical terminals. |

The optional KBHGRANT job need not be executed if the PLAN OWNER ID (or PREFIX) is the same as the CICS SQLID and the ALIAS creator ID. The procedure described here assumes that they are the same and therefore the job should not be run.

| Grant execute to TIE-MQ scenario plans | |
|---|---|
| **KBHGRAN1** | Grants EXECUTE to PUBLIC for three plans to be used in the remote IMS system. |

## Loading on-line help

A job to load on-line help is in KBH.R450.RUN(IMHLPLD). The input is a tagged file that is processed by an on-line-help load program. Change the supplied DB2 subsystem name (SSID) to the correct DB2 subsystem name.

## Modifying the BTB standard signon and signon help maps

### Standard signon map

The standard signon map (KBCSNP) can be used as-is or it can be modified to suit local requirements. The assembler macro source for the standard signon map is provided for reference in member KBCSNP2 in data set KBH.R450.ASM.

If you want to modify the standard signon map you should modify the ASM member KBCSNPA (which is a sample version based on the standard signon map). It is not recommended to change source statements outside the range indicated in the ASM member KBCSNPA. Failure to correctly change the assembler source may cause unpredictable problems during logon to BTB.

After modification of the KBCSNPA source member customize RUN member KBCSNHL (provided in data set KBH.R450.RUN) and run the first step for MAPSET=KBCSNP and MEMBER=KBCSNPA.

**Note:** The KBHMAPS procedure referenced by the job will assemble, link-edit and place the resulting load module in the DPAPLOAD library.

## Standard signon help map

The standard signon help map (KBCHLP) can be used as-is, but it is recommended to update the information provided in the sample ASM source member KBCHLP2 to give guidance for logon and usage of BTB in your local environment.

If you want to modify the standard signon help map you should modify the ASM member KBCHLP2 (which is only a sample version). It is not recommended to change source statements outside the range indicated in the ASM member KBCHLP2.

After modification of the KBCHLP2 source member customize RUN member KBCSNHL (provided in data set KBH.R450.RUN) and run the second step for MAPSET=KBCHLP and MEMBER=KBCHLP2.

**Note:** The KBHMAPS procedure referenced by the job will assemble, link-edit and place the resulting load module in the DPAPLOAD library.

## Hints for establishing DB2 and IMS environments.

If you run your back-end IMS on the same MVS and DB2 system as BTB, or if you will only be using the MQSeries connection between IMS and CICS, disregard this section. However, if CICS and IMS do not run on the same DB2 system, there are some special considerations, and the IMS environment must be setup according to the DB2 level that BTB is running on.

### Remote DB2

The Inbound and Outbound transport tables must be installed on the same DB2 system that is attached to the CICS system. The IMS transactions are SELECTing, INSERTing, and UPDATEing on the MailRoom transport tables.

All SQL is run using Distributed Data Facility (DDF) as shown in Figure 1.

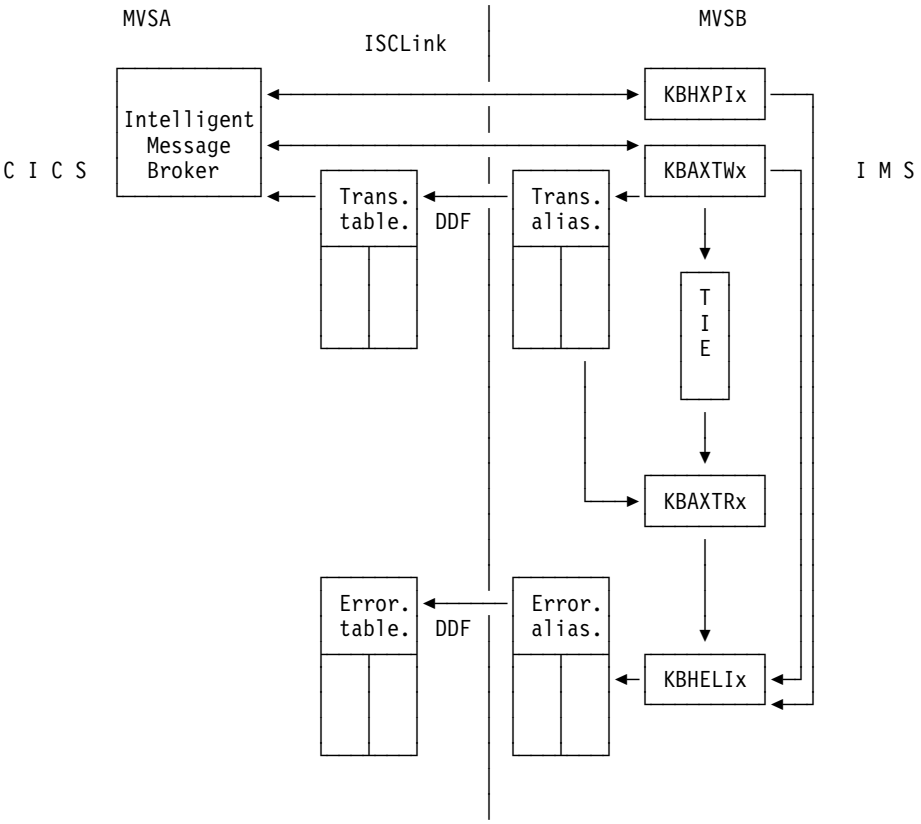


*Figure 1. Distributed Data Facility*

Ensure you correctly specify your VTAM definitions. Here are some important parameters:

```
luname   APPL  APPC=YES,                    X
               ....
               ATTNLOSS=ALL,               X
               ....
               SYNCLVL=SYNCPT,             X
               ....
```

### BIND packages

If you use remote INSERT, DELETE, UPDATE, and SELECT through the DDF, you must bind the plan with these parameters:

```
BIND     PLAN  (member) +
               ...
               PKLIST(location-name.collection-id.*) +
               ENABLE(REMOTE) +
               MEMBER(dbrm)+
               CURRENTSERVER(location-name) +
               ...
```

You must bind the plans on the same DB2 system that IMS is connected to. You must create aliases on the DB2 system the IMS is attached to. The aliases should point to the tables on the remote system. Then BIND the package list on the DB2 system the CICS is attached to.

```
BIND   PACKAGE(collection-id) +-
               ...
               ENABLE(IMSMPP) +
               MEMBER(dbrm)+
               ...
```

## Importing members from TSO to a QMF environment

In KBH.R450.RUN there is a job (KBHIQMF) to import all QMF members from TSO to QMF.

You will also find a job to export from QMF to TSO (KBHXQMF), and a job to erase QMF members from QMF (KBHEQMF).

## Starting the BTB CICS region

Assuming that your test environment is using the distributed load libraries, you can now run the BTB CICS region. If the CICS system is not using the BTB libraries directly, copy the DPAPLOAD and TPCLOAD library into one of your CICS application load libraries.

When CICS has initialized you can log on using the IMADM user ID. Customize the Working Criteria (WC) table as described in “Customizing the Working Criteria (WC) table” on page 45, and then proceed to the verification tasks in Chapter 4, “Verifying Business Transaction Broker” on page 59.

## Customizing the Working Criteria (WC) table

After loading the DB2 tables with initial data, you must customize some of the WC entries.

The WC entries can be modified using the BTB fastpath command WCEDIT. Here is an example of the scrollable panel:

```
KBHWBMIL               Working Criteria Table Entries                    IMB

Type one or more action codes, then press Enter.
Action codes: S=Select  I=Insert  C=Copy  M=Modify  D=Delete


A  WC-Key            Cty  Value                     Comment
_  AUTOFAIL BATCH    000  001 050                   Report old documents in s
_  AUTOFAIL PENDING  000  001 030                   Report old documents in s
_  AUTOFAIL SCHDUL   000  001 020                   Report old documents in s
_  AUTOFAIL XMITQ    000  001 010                   Report old documents in s
_  CICSNAME          000  IMBCICS IMB System Test   Name of CICS
_  DIST-ISERROR 1    000  TL EDS-IMM FORUM   EDSIN  Subscriber to ISERROR not
_  HEALTHCHK001      000  KBHHC1P  KBHPING 123      BEC ping to CICA
_  HEALTHCHK002      000  KBHHC2P                   TCP/IP availability check
_  HEALTHCHK003      000  DUMMY                     MQSeries check  (not acti
_  HEALTHCHK004      000  KBHHC4P  009.999.148.999  Check is this CICS is res
_  HEALTHCHK005      000  KBGHCKP  ABC ABC          Skeleton program
_  KBALIEMAILBOX     000  EUR     DKIBM   DKLINKXX  Account, and userid for R
_  MAILMAN NODEID    000  VMPROD12                  Nodeid for VM mailman
_  MAILMAN USERID    000  IBM                       Userid for VM mailman
_  REMOTE-MAILROOM   000  CIC1 -CIC2               Perform Hot Buffer cleanup
Command  ===>
F1=Help      F3=Exit      F6=Toggle    F8=Forward   F12=Cancel
```

*Figure 2. Working Criteria Table Entries*

There are three types of entry in this table:

**Global entries (country code 000)**
The global entries are used as system-wide parameters.

**Override entries (country code 123)**
The override entries can be used for local overrides for a single entry for a single country. Not all entries can be overridden.

**Skeleton entries (country code XXX)**
The skeleton entries can be used as a skeleton for inserting optional entries.

Extensive online help and edit masking is available for WC data. The editor mask is displayed if an entry is recognized, and it indicates how parameters must be entered in the value field. Online help can be viewed by pressing F1 on the detail panel in the key field.

You must make changes to these entries in the WC table:

**CICSNAME** The name of the BTB CICS system. This name is used in BTB messages output from the CICS system.

**DIST-ISERROR 1** One or more entries with the email address of key operators of BTB. You must specify an email address or information will be lost.

**KBALIEMAILBOX** The IBM Information Exchange (IE) mailbox used for sending MailRoom documents to IE. This is necessary if you are using EXP-FILE and EXP-DOC MailRoom destination scenarios.

**KBBEDAM KBAAIRP** A mandatory entry for communication from IMS to CICS. It specifies the logical terminal (LTERM) of the Inter-system communication (ISC) link from IMS to CICS.

**KBBEDAM KBASIRP** A mandatory entry for communication from IMS to CICS. It specifies the LTERM of the Inter-system communication (ISC) link from IMS to CICS.

These WC entries can be inserted or modified to activate optional features of BTB:

**AUTOFAIL** *xxxxx* Four entries to control the operational behaviour of the background Autofail scanner. The entries should be inserted if you want the scanner to fail old documents.

**CONT-RECEIVE** *nnn* The CONT-RECEIVE entries is used to store the names of the continuous receive profiles used by DataInterchange and Expedite. It is possible to check if all necessary continuous receives are active by using a function key from the BTB on-line option CRLIST.

BTB will then check if the continuous receives defined as mandatory in the WC table are active.

Read about WC Table Entry CONT-RECEIVE and the CRLIST panel in the *System Administration Guide*.

**HEALTHCHK***nnn* One or more entries to control optional activity in CICS/AO health checking (see“Understanding Business Transaction Broker Health Check” on page 84).

**REMOTE-MAILROOM** The system IDs (SYSIDs) of your connected CICS systems. To automatically perform remote buffer cleanup in your connected CICS systems, you must enter the SYSIDs of all connected CICS systems (in any order). The buffer cleanup program is invoked via DPL in the remote region, using the default CICS mirror transaction (CSMI).

**ROUTE***xx* An entry to change the routing mail type (see “Mail and Fax API” on page 47).

**SMTP***xxxxx* Three entries to specify the default SMTP port, sender, and server (see “Internet e-mail API” on page 49).

**JES SENDER** *xxxxx* — JES entries to improve message readability and to control the sender (see “Sending through JES” on page 50).

**JES-***xxx yyyyyyyy* — To override JES entries when communicating with a remote system (see “JES override entries for node ID” on page 51).

**IBMMAIL** *xxxxxx* — Three entries for using the Fax API or the Mail API through IBM Information Exchange (see “Using fax or the Internet through IBM Mail Exchange” on page 53).

**TOOLS** *dddddddd* — For appending mail to a forum on a TOOLS discussion disk (see “Appending to a TOOLS forum” on page 53).

**DIST-***ddddddddxxxx* — For sending a copy of the passed message or file to any number of receivers (see “Sending mail to a distribution list” on page 53).

**MAILMAN NODEID** — Optionally mail communication from BTB is going through a Mailman on a connected VM system. Mail routing can also be configured so that it does not use a Mailman. See also “Using a VM Mailman” on page 52. This entry is the *nodeid* of the Mailman VM system.

**MAILMAN USERID** — The user ID of the Mailman VM system (see “Using a VM Mailman” on page 52).

## Mail configuration

Various BTB components, especially the MailRoom, use the Mail, Fax and Internet APIs to send messages and files out from the CICS region. These APIs can also be used by user programs. The mail facilities can mostly be used without further setup, but depending on usage more configuration might be necessary.

## Mail and Fax API

BTB has a Mail and Fax API (KBHFTXP) supporting different address types as shown in Table 9. Some of these address types can be routed to the final receiver through different channels.

*Table 9 (Page 1 of 3). Mail routing. Default and optional mail routing in BTB.*

| Mail type | Mail type description | |
|---|---|---|
| | **Routing code** | **Routing description** |
| **HO** | Host address: *user ID at node ID* | |
| | **DIRECT** | *Default* routing code DIRECT sends mail directly through JES to the receiver. |
| | **MAILMAN** | Routing code MAILMAN sends mail through a Mailman to the receiver. |

*Table 9 (Page 2 of 3). Mail routing. Default and optional mail routing in BTB.*

| Mail type | Mail type description | |
|---|---|---|
| | **Routing code** | **Routing description** |
| **VM** | VM/Host address: *user ID at node ID*<br>VM is usually an alias for HO, but can be routed differently. | |
| | **DIRECT** | *Default* routing code DIRECT sends mail directly through JES to the receiver. |
| | **MAILMAN** | Routing code MAILMAN sends mail through a Mailman to the receiver. |
| **ME** | IBMMAIL IEA on IBM Mail Exchange: *user ID at IBMMAIL* | |
| | **MAILMAN** | *Default* routing code MAILMAN sends mail through a Mailman to IBMMAIL to the receiver. |
| | **DIRECT** | Routing code DIRECT sends mail directly through JES to IBMMAIL to the receiver. |
| **IN** | Internet e-mail address: *j_doe@somedomain.com*. | |
| | **SMTP** | *Default* routing code SMTP sends mail directly to a SMTP server. Default codepage translation table is CP500819. The full Internet API (see "Internet e-mail API" on page 49) is used. |
| | **IBMMAIL-MAILMAN** | Routing code IBMMAIL-MAILMAN uses a Mailman and the IBMMAIL bridge to Internet. |
| | **IBMMAIL-DIRECT** | Routing code IBMMAIL-DIRECT sends through JES to IBMMAIL and use the bridge to Internet. |
| **TL** | Tools append to FORUM: *my_forum FORUM on disk* | |
| | **MAILMAN** | *Default* routing code MAILMAN appends to the Forum through Mailman call to TOOLS EXEC. |
| | **DIRECT** | Routing code DIRECT sends the append directly through JES Punch to the TOOLS machine. |
| **FX** | Telefax: *cty_code + fax_number* | |
| | **IBMMAIL-MAILMAN** | *Default* routing code IBMMAIL-MAILMAN sends the fax through Mailman to IBM Mail Exchange Fax service |
| | **IBMMAIL-DIRECT** | Routing code IBMMAIL-DIRECT sends the fax through JES to IBM Mail Exchange Fax service |
| *xx* | Existing mail type or your own mail type.<br>Extend the Mail API support by adding your own code. | |
| | *pgmname* | The program receives control for all mail types *xx* and can use any method to send. The API (KBHFTXP) will `EXEC CICS LINK` the program with the full API structure passed in the communication area. |
| **LI** | Send mail to a distribution list.<br>Sending mail to a distribution list results in mail being sent to different kinds of receivers. See "Sending mail to a distribution list" on page 53. | |
| **IE** | IE Mailbox on IBM Information Exchange.<br>While not supported in the Mail API, the IE mail type *is* a recognized mail type in BTB registrations for MailRoom services. Data is sent to IE using Expedite/CICS. | |

| Table 9 (Page 3 of 3). Mail routing. Default and optional mail routing in BTB. | | |
|---|---|---|
| **Mail type** | **Mail type description** | |
| | **Routing code** | **Routing description** |
| **TC** | TCP/IP Server.<br>While not supported in the Mail API, the TC mail type is a recognized mail type in BTB registrations for MailRoom services. Data is sent to the TCP/IP Server through TCP/IP communication.<br>The address is either a host name or a *dotted* IP address. | |

The routing can be changed by adding entries to the WC table to select optional routes:

**ROUTE xx** *xx* is the mail type (for example HO or IN).

**Cty** 000 for global entry or *nnn* for override entry.

**Value** Positions 1–20 contain a routing code or program to be linked to. Position 21 is blank. Positions 22–29 can optionally contain a code page translation table. For valid routing codes, refer to Table 9 on page 47.

Here is an example of routing entries in the WC table:

```
WC-Key       Cty  Value            Comment
ROUTE VM     000  MAILMAN          Route most traffic through Mailman
ROUTE VM     123  DIRECT           Route some traffic directly through JES
```

For information about customizing the WC table, refer to “Customizing the Working Criteria (WC) table” on page 45.

## Internet e-mail API

The BTB Internet e-mail API (KBHSMTP) is a specialized API for sending e-mail with attachments to users on the Internet, through TCP/IP communication with an SMTP server, which delivers the mail to the receiver. It is a public API and also used internally in the Mail and Fax API (KBHFTXP).

**Note:** If used directly, it will not honor the routing setup for the IN mail type— it will always communicate directly with an SMTP server.

Before using the API you must customize three entries in the WC table to specify default port, sender, and server:

**SMTP PORT** The TCP/IP port number used by the SMTP server.

**Cty** 000 for global entry or *nnn* for override entry.

**Value** 00025 (the common port number for an SMTP server). Other values can be used if the SMTP server is using a different port number.

**SMTP SENDER** E-mail address to be used as sender.

**Cty** 000 for global entry or *nnn* for override entry.

**Value** An e-mail address (for example spoc@dk.ibm.com) which will be the sender of mail. An alternative format is:
"BTB Test" <spoc@dk.ibm.com> to distinguish between test and production.

**SMTP SERVER** Hostname of SMTP server.

**Cty** 000 for global entry or *nnn* for override entry.

**Value** The hostname or IP address of a nearby SMTP server that should be used when sending e-mail to the Internet.

For information about customizing the WC table, refer to “Customizing the Working Criteria (WC) table” on page 45.

If a hostname is used as the address of the SMTP server CICS must have access to the TCPIP.DATA file. Here is an example of the DD name:

```
//SYSTCPD  DD DSN=TCPIP.SEZAINST(TCPDATA),DISP=SHR
```

Further information is available in information APAR II10825 and II11145.

## Sending through JES

Most mail transmissions from the CICS region use JES, which requires that the CICS/JES interface is active as shown in “CICS SIT” on page 21. JES nodes must also be defined for all systems that BTB can send mail to, either by defining the entire network to JES and using the DIRECT (or xxx-DIRECT) routing codes, or by using a Mailman on a connected VM system (see “Using a VM Mailman” on page 52) and using MAILMAN (or xxx-MAILMAN) routing codes.

JES support can be used without further configuration, but to get more readable messages and to control the sender, you must customize some entries in the WC table:

**JES SENDER TEXT** Optional sender name for notes sent through JES.

**Cty** 000 for global entry or *nnn* for override entry.

**Value** Text to appear in note headers to identify the sender. For example, BTB Test.

**JES SENDER NODE** Optional sender node ID.

**Cty** 000 for global entry or *nnn* for override entry.

**Value** The internal sender node in the NETDATA transmission file.

**JES SENDER USER** Optional sender user ID.

**Cty** 000 for global entry or *nnn* for override entry.

**Value** The internal sender user in the NETDATA transmission file.

**JES SPOOL CLASS** Override of spool class.

**Cty** 000 for global entry or *nnn* for override entry.

**Value** The spool class used is B, but you can use this entry to change to other supported spool classes.

**JES SPOOL MODE** Override of spool mode.

**Cty** 000 for global entry or *nnn* for override entry.

**Value** Spool mode is usually NETDATA, but you can override it to either PUNCH or PRINT.

For information about customizing the WC table, refer to “Customizing the Working Criteria (WC) table” on page 45.

The external sender node and user are provided by the CICS and JES setup (which JES user started the CICS) and cannot be changed dynamically. But the user ID node specified inside the NETDATA transmission file (internal sender user ID and node) can be customized to be a monitored user ID. This is helpful if either the receiver makes a reply, or if there is a delivery failure. (Some mail gateways only pass the internal user and node.)

## JES override entries for node ID

JES SENDER TEXT, USER and NODE are usually customized globally, while JES SPOOL CLASS and MODE are not changed. If communicating with a remote system with special requirements, you can override all the JES entries mentioned here and add special output descriptor information for a single node ID.

This is done with JES-xxx yyyyyyyy entries in the WCtable::

| | |
|---|---|
| **JES---- yyyyyyyy** | Entry to activate override for node ID yyyyyyyy. |
| **Cty** | 000 for global entry or *nnn* for override entry |
| **Value** | This entry is queried for every node ID BTB sends to. If the entry exists BTB will not use the global entries but instead use special override entries for this node ID. |
| **JES-TXT yyyyyyy** | Sender name for notes sent through JES to node ID yyyyyyyy |
| **Cty** | 000 for global entry or *nnn* for override entry. |
| **Value** | Same function as JES SENDER TEXT. |
| **JES-NOD yyyyyyyy** | Sender node ID when sending to node ID yyyyyyyy. |
| **Cty** | 000 for global entry or *nnn* for override entry. |
| **Value** | Same function as JES SENDER NODE. |
| **JES-USR yyyyyyyy** | Sender user ID when sending to node ID yyyyyyyy. |
| **Cty** | 000 for global entry or *nnn* for override entry. |
| **Value** | Same function as JES SENDER USER. |
| **JES-CLS yyyyyyyy** | Override of spool class when sending to node ID yyyyyyyy. |
| **Cty** | 000 for global entry or *nnn* for override entry. |
| **Value** | Same function as JES SPOOL CLASS. |
| **JES-MOD yyyyyyyy** | Override of spool mode when sending to node ID yyyyyyyy. |
| **Cty** | 000 for global entry or *nnn* for override entry. |
| **Value** | Same function as JES SPOOL MODE |
| **JES-OUT yyyyyyyy** | Set an output descriptor when sending to node ID yyyyyyyy. |
| **Cty** | 000 for global entry or *nnn* for override entry. |
| **Value** | Additional instructions used as output descriptor. For example, WRITER('XYZ') or TITLE('Something') |

For information about customizing the WC table, refer to “Customizing the Working Criteria (WC) table” on page 45.

## Using a VM Mailman

The BTB mail API can use a *Mailman* on an adjacent VM system to distribute mail from BTB. This is useful if the JES system does not know all the nodes of the network. Mailman is optional and not part of base package.

If the Mailman is selected through the default routing or through specific ROUTE entries it is also necessary to configure a Mailman on VM and define its address in the WC table:

**MAILMAN node ID** Entry containing the node ID of the Mailman.

**Cty** 000 for global entry or *nnn* for override entry.

**Value** The node ID of the Mailman, for example XYZVM1.

**MAILMAN user ID** Entry containing the node ID of the Mailman.

**Cty** 000 for global entry or *nnn* for override entry.

**Value** The user ID of the Mailman, for example MAILMAN.

For information about customizing the WC table, refer to “Customizing the Working Criteria (WC) table” on page 45.

For more information about Mailman, refer to the Mailman package.

## Using IBM Mail Exchange

IBM Mail Exchange can be used to communicate with users on other systems connected to IBM Mail Exchange, and to send faxes and send e-mail to the Internet. BTB can use all of these IBM Mail Exchange functions.

Before using IBM Mail Exchange you must have an account and a connection with the node ID IBMMAIL. You then need to to accquire an inter-enterprise address (IEA) for the sending user ID.

If a Mailman is used, it is the Mailman user ID that must have an IEA. All communication from IBM Mail Exchange, such as acknowledgments, delivery failures, and reply e-mail are sent back to the Mailman, which has a process to automatically log acknowledgments and forward other files.

If a Mailman is not used, all communication with IBM Mail Exchange will be done directly from JES, and it is the external sender user ID and node ID that must have an IEA. The node IBMMAIL must also be known to JES. It is also necessary to force the internal NETDATA transmission file user ID and node ID to be exactly the same by using JES override entries in the WC table:

```
WC-Key            Cty  Value                    Comment
JES---- IBMMAIL   000  Override                 Should JES parameters
JES-NOD IBMMAIL   000  MYMVS1                   Node ID who is sending
JES-TXT IBMMAIL   000  IMB Test System         Text identification of
JES-USR IBMMAIL   000  MYJESUSR                 User ID who is sending
```

All communication from IBM Mail Exchange such as acknowledgments, delivery failures, and reply e-mail is sent back to this user ID, which must have a process to handle received files.

### Using fax or the Internet through IBM Mail Exchange

If either the Fax API is used to send faxes through IBM Mail Exchange, or the Mail API is using the IBM Mail Exchange Internet bridge (ROUTE IN through IBMMAIL), it is possible to customize the operation through three entries in the WC table:

**IBMMAIL FAX ACK** Entry to request Fax Acknowledgment report.

**Cty** 000 for global entry or *nnn* for override entry.

**Value** YES or NO (the default).

**IBMMAIL INT ACK** Entry to request Internet Bridge Acknowledgment report.

**Cty** 000 for global entry or *nnn* for override entry.

**Value** YES or NO (the default).

**IBMMAIL INT AT** Entry to specify character for @

**Cty** 000 for global entry or *nnn* for override entry.

**Value** The default character for @ is X'7C'. Use this entry to specify a different character. The correct character to use is dependent on how the system is defined in IBM Mail Exchange

For information about customizing the WC table, refer to “Customizing the Working Criteria (WC) table” on page 45.

## Appending to a TOOLS forum

When using the mail type TL the mail is appended to a forum on a TOOLS discussion disk. Before using this facility you must create the forum and define the address of the Toolsrun user ID and node ID controlling the TOOLS disk in the WC table:

**TOOLS dddddddd** Address of Toolsrun machine for TOOLS disk dddddddd.

**Cty** 000 for global entry or *nnn* for override entry.

**Value** Position 1–8 is the node ID. Position 10–17 is the user ID of the Toolsrun machine. Position 19–26 is the name of the disk (dddddddd).

For information about customizing the WC table, refer to “Customizing the Working Criteria (WC) table” on page 45.

## Sending mail to a distribution list

Using the mail type LI will send a copy of the passed message or file to any number of receivers.

This is used in the MailRoom where the distribution list ISERROR is used to alert the MailRoom operation about problems.

Before using a distribution list, it must be defined by specifying its members in the WC table:

**DIST-ddddddddxxx** dddddddd is the name of the distribution list. xxx is a character string to distinguish entries on the same list.

**Cty** 000 for global entry or *nnn* for override entry.

**Value** The mail type and the address for this member of the distribution list.

For information about customizing the WC table, refer to “Customizing the Working Criteria (WC) table” on page 45.

## The mail transmission log (KBHMLOG)

Whenever BTB attempts to send an e-mail out from the CICS system via either JES to SNA-connected systems, or via SMTP to the Internet, it is logged in a *Mail transmission log*. The log is an extrapartition TD queue defined in KBHDCT1 and KBHDCT2, as well as in the CICS JCL (the sample is in KBHJCL).

As delivered with BTB the TD queue is directed to this DD name in the CICS JCL:

```
//KBHMLOG  DD SYSOUT=*
```

The output can also be captured in a data set and retained for auditing and logging purposes.

The contents of the mail log can be seen in Figure 3.

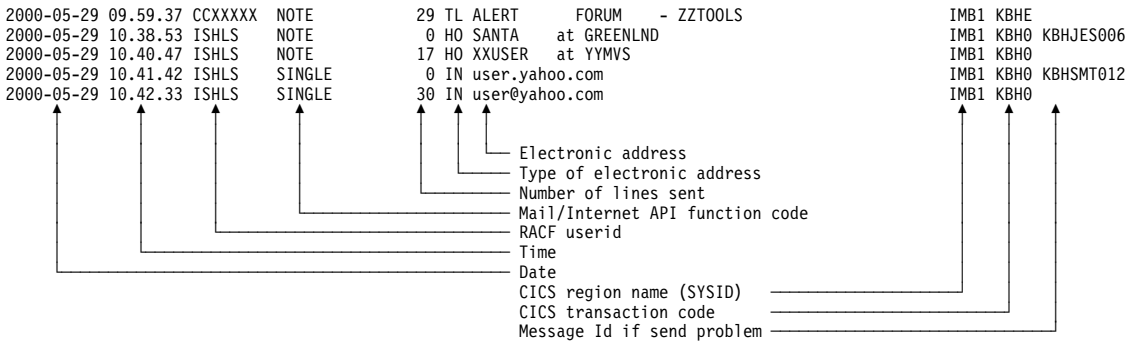


*Figure 3. Contents of mail log KBHMLOG*

# Chapter 3. Migrating to Intelligent Message Broker 4.5

This chapter describes how to migrate to IMB 4.5 from an existing IMB 4.4 system.

## Getting the migration package

The CICS and IMS migration data sets are DFSMSdss dump data sets in tersed format. Perform these actions to unload the data sets:

1. Receive the **IM450RCP DFDSS** and **IM450RIP DFDSS** files contained in the IM450RUN package and catalogue these data sets on your system:

   KBH.R450.IM450RCP

   KBH.R450.IM450RIP

2. Unterse and restore the DFSMSdss dump files contained in the fix package using the **IM450RUN JCL** included in the IM450RUN package as a model.

   The package contains all the information you need—it is a *base release*. After untersing and restoring the DFSMSdss files you will have a set of data sets called KBH.R450.*.

## Upgrading from an existing IMB 4.4 system

Perform these steps to upgrade your system from an IMB 4.4 system:

1. Ensure that your CICS has been upgraded to CICS Transaction Server for OS/390 1.3 before you proceed.

2. Run job **IM450MIG** in KBH.R450.RUN to:

   - Create three new tables (KBDTMG, KBDTSX and KBDTXM). Refer to KBH.R450.SQL(KBDTMG,KBDTSX,KBDTXM).
   - Grant access to the new tables. Refer to member KBDGRNEW in KBH.R450.SQL.
   - Define new aliases. Refer to member KBDALNEW in KBH.R450.SQL.
   - To drop unused tablespace. Refer to member IM450DRO in KBH.R450.SQL.
   - To create new indexes on ASCA tables. Refer to member INDXASCA in KBH.R450.SQL.
   - To create new GDG base for archive jobs.

   Customize these members to reflect the naming standards for your existing IMB 4.4 DB2 entities.

3. Load new data for some DB2 tables.

   Update these tables:

   **KBDTMS** Error Messages and Event Messages. Modify and run KBH.R450.RUN(KBDLOAD) to reload this table. Input data is in KBH.R450.KBDTMS. If you added messages to this table with the BTB option *MSG*, you must unload your existing data, separate your own entries in a file, and load the input data set and your data set.

© Copyright IBM Corp. 1992, 2002

**KBDTOP** Menu Options table. Modify and run KBH.R450.RUN(KBDLOAD) to reload this table. Input data is in KBH.R450.KBDTOP. If you added options to this table with the BTB option *OPTION*, you must unload your existing data, separate your own entries in a file, and load the input data set and your data set.

If you have added only a few options, it will be simpler to enter them again after loading the new input data set. Some dependent tables might get a CHECK PENDING state which can be corrected later.

**KBDTAO** Options in Agreement sets. Modify and run KBH.R450.RUN(KBDLOAD) to reload this table. Input data is in KBH.R450.KBDTAO. If you added your own options and included these in an agreement set using the BTB option *AGREM*, you must unload your existing data, separate your own entries in a file, and load the input data set and your data set.

If you have added only a few options, it will be simpler to enter them again after loading the new input data set.

**KBDTSUN** Sundry table. Modify and run KBH.R450.RUN(KBDLOAD) to reload this table. Input data is KBH.R450.KBDTSUN. If you added your own entries in the sundry table using BTB option *SUNDRY*, you must unload your existing data, separate your own entries in a file, and load the input data set and your data set.

If you have added only a few entries, it will be simpler to enter them again after loading the new input data set. Bee aware of possible entries regarding status of requests for archiving should be entred after load of SUNDRY table.

**KBDTWC** Working Criteria table. Modify and run KBH.R450.RUN(KBDLOAD) to reload this table. Input data is KBH.R450.KBDTWC. If you customized some entries in this table using the BTB option *WCEDIT* you are recommended to unload or print your existing customization, load the new input data set and manually perform any customisation required again.

You can also unload and keep only the non-skeleton entries (remove all entries with country code XXX), and merge it with all skeleton entries from the input data set, and load it back into the table. This method lets you keep your existing customization, and the new or updated skeleton entries (display using F6) can be used to add new entries in the WC table.

4. Run RUNSTAT and STOSPACE against all the tablespaces and storagegroups to update the DB2 catalog statistics.
5. Create packages for the new version of BTB.

   Modify KBH.R450.BIND(IMBNDPKG) and run KBH.R450.RUN(IMBINDPA).

   Review the IMBNDPKG BIND member to ensure you use the DB2 subsystem ID, owner, and other parameters specific to your organisation.

   **Note:** The *package version-id* for the packages created will be *IMB_4.5.0*.
6. Make the new load modules available to batch and to TSO.

Replace the LOAD library referenced by your batch jobs and by TSO with KBH.R450.LOAD.

7. Load on-line help by running KBH.R450.RUN(IMHLPLD). Input data for the job is in KBH.R450.HELP. Ensure to update your existing IMHLPLD job before submitting the load job. The job has been changed to include two new HELP members called SRCEXI and XML.

8. Install CICS RDO definitions.

   These RDO members are new :

   ADDRDO
   KBHRCTRD

   These RDO members have changed :

   DELRDO
   KBADPLRD
   KBAFCTRD
   KBARDO
   KBATCTRD
   KBBBERDO
   KBBRDO
   KBBTCTRD
   KBCRDO
   KBFRDO
   KBGRDO
   KBHDEBUG
   KBHFCTRD
   KBHRDO
   KBIA2AFI
   KBIA2AOP
   KBIA2APR
   KBICSRDO
   KBIDPLRD
   KBIRDO
   REMRDO

   Please notice that the KBHRCT definition now are included in the RDO. To avoid duplicates you must remove your old KBHRCT definitions from RDO before you add KBHRCTRD.

   The DCT definitions are now a part of the RDO, and you will find TD-queue definitions in the groups : KBA, KBG, KBH and KBI. You should remove your old DCT definitions from RDO before loading these groups.

9. Make the new modules available to CICS.

   Replace the TPCLOAD data set referenced by your CICS DFHRPL DD statement with KBH.R450.TPCLOAD.

   Replace the DPAPLOAD data set referenced by your CICS DFHRPL DD statement with KBH.R450.DPAPLOAD

   Remember to remove BTB quickfixes from previous release.

10. Make the new load modules available to IMS.

    Replace the TPILOAD data set referenced by your IMS STEPLIB DD statement with KBH.R450.TPILOAD.

These steps constitutes the *necessary* things, that has to be done to perform the upgrade. You can now start the CICS-region(s) to check, that the upgrade has been performed correctly.

## Additional migration tasks

1. DB2 Plan *KBASBWP* has changed and should be bound.
2. The following archive jobs has changed:

   **KBDUTL1A** Imagecopy of the transport tables.

   New table *KBDTMG* has been added.

   **KBDUTL1B** Unload/archive/reload of the transport tables.

   New table *KBDTMG* has been added.

   **KBDUTL2A** Imagecopy of the ASCA tables.

   *KBDTDE* and *KBDTEF* have been removed

   **KBDUTL2B** Unload/archive/reload of the ASCA tables.

   *KBDTDE* and *KBDTEF* have been removed
3. See also Chapter 6, “Understanding the archiving function” on page 71 regarding a new entry *ARCHSTAT* in the sundry table to define valid status codes for archiving.
4. Standard signon help map

   The standard signon help map (KBCHLP) can be used as-is, but it is recommended to update the information provided in the sample ASM source member KBCHLP2 to give guidance for logon and usage of BTB in your local environment. Refer to “Standard signon help map” on page 42.

## Using the DB2 Administration Tool

You can use DB2 Administration Tool for MVS/ESA to migrate the remaining data from the test environment to production. The DB2 Administration Tool can be used to create DB2 administration and maintenance jobs, such as UNLOAD, LOAD, and image copy.

# Chapter 4. Verifying Business Transaction Broker

This chapter describes the tasks you can run to verify that BTB is functioning correctly.

The procedures are designed to help you to understand the relationship between Services, Agreement Sets, Trading Partners, and Subscriptions. You are taken through these tasks:

- Create a Service
- Create an Agreement Set
- Add a Service to an Agreement Set
- Add an Agreement Set to a Trading Partner
- Insert an Electronic Address
- Create a Subscription
- Give a Trading Partner access to a Subscription
- Inquire on a Service
- Get the status of an Event

A verification program sends a document through MailRoom, to these two destination scenarios:

- A program (PGM-CICS)
- A mail recipient (MAIL) on a connected host system (VM or MVS)

The example used in the verification tasks uses a mail address of *XXUSERID at YYSYSTEM*, so you must define an electronic address called *XXUSERID at YYSYSTEM* (see "Inserting an Electronic Address" on page 62).

The panels shown in the verification procedure might differ slightly in appearance from those at your organization depending on the data loaded into the sample tables. Before beginning the verification procedure, ensure that you have loaded the sample DB2 tables as described in "Setting up DB2" on page 32. To get to the panel you need you can either:

- Enter the fastpath command on the command line of any panel, or
- Step through the panel flow by typing an action code, or choice, in the Action field, or on the command line.

To get a list of the fastpath commands, type the action code **C** from the Main Panel, or the fastpath command **COM** from any panel.

## Logging on to BTB

Start the CICS system and log on to BTB. You get the panel shown in Figure 4.

```
KBCSNP                 International Business Machines                    IMB

             =======   ============     ======      ======
             =======   ==============   =======    =======
               ===      ===     ====     ======   ======
               ===      ===========      ======= =======
               ===      ===========      === ======= ===
               ===      ===     ====     ===  =====  ===
             =======   ==============   =====   ===   =====
             =======   ============     =====    =    =====

                      Intelligent Message Broker

          Type User Identification and Password and press ENTER

          Userid . . . . .
          Password . . . .

          New Password . .           (Optional; if change is wanted)

F1=Help   F3=Exit                                                TESTCICS
```

*Figure 4. Logon panel*

Enter a user ID and password to get the Main Panel shown in Figure 5. The user ID **IMADM** is defined in Business Transaction Broker by default, but this might have changed during load of the tables (see "The USer (US) table." on page 36 and "RACF CICS user ID as BTB user" on page 12).

```
MENU                                Main Panel                          IMB

Type choice or fastpath, then press Enter.

_  A. ADM    Administration
   C. COM    All available Options

                                  ------------------------------------------
                                  | User...: XXUSER                        |
                                  | from...: IBM Denmark, IMB Admin        |
                                  ------------------------------------------
KBH001I Welcome to IMB 4.5 (c) Copyright IBM Denmark A/S 2002
Command  ===>
```

*Figure 5. Main Panel*

Figure 5 shows the BTB Main Panel.

© Copyright IBM Corp. 1992, 2002

## Creating a Service

Type the fastpath command **SERVIC**, or step through the panels using **A**,**3**,**3** from the Main Panel. You get the panel shown in Figure 6 on page 60.

```
KBEIBMCL                    Mailroom Services                          IMB

Type one or more action codes, then press Enter.
Action codes: D=Delete  I=Insert  C=Copy  M=Modify  S=Select T=TP subscribers


 __  ___  ____  _______  _____________  ____________________________________
A  Cty  Appl  Service   Layout          Description
I  123  KBAW  KBAWTP11  XX-ORDER        Sample XX-ORDER to TP 11 via MAIL
_  123  KBAW  KBAWTP12  XX-ORDER        Sample XX-ORDER to TP 12 via FAX
_  123  KBAW  KBAWTP13  XX-ORDER        Sample XX-ORDER to TP 13 via DI-EDI
_  123  KBAZ  KBAZPGBA  PGM-TO-BATCH    Verification - PGM to BATCH
_  123  KBAZ  KBAZPGCI  PGM-TO-PGM-CICS Verification - PGM to CICS
_  123  KBAZ  KBAZPGDI  PGM-TO-DI-EDI   Verification - PGM to DI-EDI
_  123  KBAZ  KBAZPGED  PGM-TO-EXP-DOC  Verification - PGM to EXP-DOC
_  123  KBAZ  KBAZPGEF  PGM-TO-EXP-FILE Verification - PGM to EXP-FILE
_  123  KBAZ  KBAZPGFA  PGM-TO-FAX      Verification - PGM to FAX
_  123  KBAZ  KBAZPGMA  PGM-TO-MAIL     Verification - PGM to MAIL
_  123  KBAZ  KBAZPGTC  PGM-TO-TCPIP    Verification - PGM to TCPIP
_  123  KBAZ  KBAZPGTI  PGM-TO-TIE-IMS  Verification - PGM to TIE-IMS
_

Command  ===>
F1=Help      F3=Exit      F8=Forward   F12=Cancel
```

*Figure 6. Mailroom Services*

Type **I**, for Insert, in the Action field and you get the scrollable panel shown in Figure 7.

```
KBEICM1I                Insert new MailRoom Service                    IMB

Press Enter to insert new MailRoom Service

Global info for service
Service name . . . . . . SAMPLE-1
Country Code . . . . . . 123
Application System . . . KBAZ
Description. . . . . . . Sample program to verify MailRoom__
Subscription Type. . . . T +
Source Scenario. . . . . ________ +
Destination Scenario . . ________ +
Enabled. . . . . . . . . 1 +
Document Layout. . . . . SAMPLE-LAYOUT__
Archive Profile. . . . . ________ +

Kernel processing
Extended Logging . . . . ________ +
Priority level . . . . . ________ +
Kernel Exit  . . . . . . ________ +
Exit parameters. . . . . ________________________________________

Service Point of Contact
Trading partner number . 009999999 +
Trading partner name . . : IBM Test Country users
Electronic address . . . ________________________________________ +
Language code  . . . . . UK +


Command  ===>
F1=Help      F3=Exit      F4=Prompt    F7=Backward  F12=Cancel
```

*Figure 7. Insert new MailRoom Service*

In this panel, enter these values:

**Service name** SAMPLE-1

**Country Code** 123

**Application System** KBAZ

**Description** Sample program to verify MailRoom

**Subscription Type** T

**Enabled** 1

**Document Layout** SAMPLE-LAYOUT

**Language code** UK

Press Enter to accept the values.

## Creating an Agreement Set

Type the fastpath command **AGREM**, or step through the panels using **A**,**3**,**2** from the Main Panel. You get the panel shown in Figure 8.

```
KBEFBMIL                      Agreement Sets                           IMB

Type one or more action codes, then press Enter.
Action codes: B=BPIs in set   O=Options in Set  S=Services in Set
              T=Trading Partner Access  I=Insert  M=Modify  D=Delete


 _____ ____________________________________
A  Agr.Set  Description
I  BPI-4    IMB Sample BPI
_  EDI-4+   MailRoom 4.x Sample Services
_  KBHCEADM IMB Central User Administration
_  KBHDEVL  IMB Test Applications for Developer
_  KBHEDS   IMB MailRoom Monitor Application
_  KBHINSTL IMB Installation Applications
_  KBHOPER  IMB Operation Applications



Command  ===>
F1=Help      F3=Exit      F8=Forward   F12=Cancel
```

*Figure 8. Agreement Sets*

Type **I**, for Insert, in the Action field and you get the panel shown in Figure 9.

```
KBEHEMII                  Insert new Agreement Set                     IMB

Press Enter to insert new Agreement Set




Agreement Set  . . . . . SAMPLE


Description  . . . . . . Sample MailRoom services_________________


Agreement Set Type . . . A     'A' = Normal Agreement Set
                               'B' = Special Agreement Set (Hidden)
                               ' ' = IMB Internal Administration Set




Command  ===>
F1=Help      F3=Exit      F12=Cancel
```

*Figure 9. Insert new Agreement Set*

In this panel, enter these values:

**Agreement Set** SAMPLE

**Description** Sample MailRoom Services

**Agreement Set Type** A

Press Enter to accept the values and you get the panel shown in Figure 10 on page 61.

## Adding a Service to an Agreement Set

```
KBEFBMIL                        Agreement Sets                          IMB

Type one or more action codes, then press Enter.
Action codes: B=BPIs in set   O=Options in Set  S=Services in Set
              T=Trading Partner Access  I=Insert  M=Modify  D=Delete


   SA_____ ____________________________________________
A  Agr.Set  Description
S  SAMPLE   Sample MailRoom services




Command  ===>
F1=Help      F3=Exit      F8=Forward   F12=Cancel
```

*Figure 10. Agreement Sets*

You can set masks to limit the lines that are displayed. Type **SA** in the field above *Agr.Set* to limit the display to Agreement Sets beginning with the letters **SA**.

Type **S**, for Services in Set, in the Action field next to the Agreement Set you just created, to list the Services. You get the panel shown in Figure 11.

```
KBEHFMIL             Mailroom Services in Agreement set                 IMB

Type one or more action codes, then press Enter.
Action codes: A=Add  R=Remove  S=Select

Agreement Set: SAMPLE   / Sample MailRoom services


A  Cty  Appl  Service   Layout            Description
A




KBE171I No MailRoom services in this Agreement Set
Command  ===>
F1=Help      F3=Exit      F12=Cancel
```

*Figure 11. Mailroom Services in Agreement Set (Add)*

Type **A**, for Add, in the Action field, and you are presented with a list of Services, shown in Figure 12.

```
KBEIBMCP                     Mailroom Services                          IMB

Type one action code, then press Enter.
Action code: A=Add to Agrement set

                              S_____________  ____________________________________
A  Cty  Appl  Service   Layout            Description
_  123  KBAZ  SAMPLE-1  SAMPLE-LAYOUT     Test sample pgm to verify MailRoom
_  123  KBAZ  SAMPPGXX  SAMPLE-LAYOUT     Sample CICS Write to 2 receivers




Command  ===>
F1=Help      F3=Exit      F12=Cancel
```

*Figure 12. Mailroom Services*

Mask the list by typing **S** is the *Layout* field. Type **A**, for Add, next to the service you created in "Creating a Service" on page 60.

## Adding an Agreement Set to a Trading Partner

Return to the Trading Partners panel (Figure 13) by using one of these methods:

- Typing the fastpath command **CEADM**
- Stepping through the panels using **A**,**1**,**1** from the Main Panel.

```
KBEABMCL            Central Trading Partner Administration              IMB

Type one or more action codes, then press Enter.
Action codes: A=Agreement Sets  E=Electronic Addresses  T=External TP's
              P=Persons         S=Subscriptions         U=Users    X=Scope

   123 ________  ____________________________________________
A  Cty. Number    Trading Partner
_  123  000800000  Verification TP Inc.
A  123  000800001  Sample TP no. 1 (sender)
_  123  000800002  Sample TP no. 2 (sender)
_  123  000800003  Sample TP no. 3 (sender)
_  123  000800011  Sample TP no. 11 (receiver)
_  123  000800012  Sample TP no. 12 (receiver)
_  123  000800013  Sample TP no. 13 (receiver)
_  123  009999999  IBM Test Country users




Command  ===>
F1=Help      F3=Exit      F12=Cancel
```

*Figure 13. Trading Partners*

Type **A**, for Agreement Sets, next to *Trading Partner 000800001* and you get the panel shown in Figure 14 on page 62.

```
KBEFBMCL                        Agreement Sets                          IMB

Type one or more action codes, then press Enter.
Action codes: A=Add  R=Remove

Trading Partner: 123 / 000800001 / Sample TP no. 1 (sender)

   _______ ____________________________________
A  Agr.Set  Description                          Included
_  BPI-4    IMB Sample BPI                       No
_  EDI-4+   MailRoom 4.x Sample Services         Yes
_  KBHEDS   IMB MailRoom Monitor Application     No
_  KBHOPER  IMB Operation Applications           No
A  SAMPLE   Sample MailRoom services             Yes




Command  ===>
F1=Help      F3=Exit      F12=Cancel
```

*Figure 14. Agreement Sets (Add)*

Type **A**, for Add, next to the Agreement Set called SAMPLE. An asterisk appears in the Action field and the *Included* field changes to *Yes*, indicating the Agreement Set has been added to Trading Partner 000800001. Return to the Trading Partners panel (Figure 13 on page 61).

Repeat this procedure for Trading Partners 0008000011 and 0008000012.

## Inserting an Electronic Address

Return to the Trading Partners panel shown in Figure 13 on page 61 Type **E**, for Electronic Addresses, in the Action field next to *Trading Partner 000800012* and you get the panel shown in Figure 15.

```
KBEEDMCL                     Electronic Addresses                       IMB

Type one or more action codes, then press Enter.
Action codes: D=Delete  I=Insert  C=Copy  M=Modify  S=Select

Trading Partner:  123 / 000800012 / Sample TP no. 12 (receiver)

   ____________________________________
A  Electronic Address                  Type of address            Scope
I






Command  ===>
F1=Help      F3=Exit      F12=Cancel
```

*Figure 15. Electronic Addresses*

Type **I**, for Insert, in the Action field, and you get the panel shown in Figure 16.

```
KBEEEMCI                Insert new Electronic Address                   IMB

Press Enter to insert new Electronic Address

Addressing mode:
Trading Partner. . . . : 123 / 000800012 / Sample TP no. 12 (receiver)
Address type . . . . . . HO +
Scope of address . . . . 1 +

Host address:
Userid . . . . . . . . . _______
Nodeid . . . . . . . . . _______




Command  ===>
F1=Help      F3=Exit      F4=Prompt    F12=Cancel
```

*Figure 16. Insert new Electronic Address*

In the Insert new Electronic Address panel, enter these values:

**User** XXUSERID.

**Node** YYSYSTEM

Press Enter to accept the values.

## Creating a Subscription

Type **S**, for Subscriptions, in the Action field next to *Trading Partner 000800001*, and you get the panel shown in Figure 17.

```
KBEDBMCL                Subscribe to MailRoom Services                  IMB

Type one or more action codes, then press Enter.
Action codes: S=Subscribe  U=Unsubscribe  M=Modify  T=TP Subscribers

Trading Partner: 123 / 000800001 / Sample TP no. 1 (sender)

   S_______ ___________________ ____________________________
A  Service  Dir  Layout           Description                  State    Sub.
S  SAMPLE-1 Send SAMPLE-LAYOUT    Test sample pgm to verify Mai          No
_  SAMPLE-1 Recv SAMPLE-LAYOUT    Test sample pgm to verify Mai          No





Command  ===>
F1=Help      F3=Exit      F8=Forward   F12=Cancel
```

*Figure 17. Mailroom-Services Available for Subscription (Sender)*

Type **S**, for Subscribe, in the Action field next to *SAMPLE-1 Send SAMPLE-LAYOUT*, and you get the panel shown in Figure 18 on page 63.

```
KBEICM2I            Insert new MailRoom Send Subscription                  IMB

Press Enter to insert new Send Subscription

Subscription Data
Service name . . . . . : SAMPLE-1
Description. . . . . . : Test sample pgm to verify MailRoom
Source Scenario. . . . . PGM____ +
Enabled. . . . . . . . . 1 +
Comments . . . . . . . . ________________________________________

Source: Program
Source Accounting Info . ________________________________________

Service Control info
Input Schedule . . . . . ____________________ +

Define System Ack.
System Ack type. . . . . ________ +

Command  ===>
F1=Help      F3=Exit      F4=Prompt    F12=Cancel
```

*Figure 18. Insert new MailRoom Send Subscription*

In this panel, enter these values:

**Source Scenario** PGM

**Enabled** 1

Press Enter to update the panel and you get this message:

```
KBE05DI Service has changed type, new attributes are shown
```

Then enter these values: Press Enter to accept the values.

Return to the Trading Partners panel (Figure 13 on page 61).

Type **S**, for Subscriptions, in the Action field next to *Trading Partner 000800011*, and you get the panel shown in Figure 19.

```
KBEDBMCL                Subscribe to MailRoom Services                   IMB

Type one or more action codes, then press Enter.
Action codes: S=Subscribe  U=Unsubscribe  M=Modify  T=TP Subscribers

Trading Partner: 123 / 000800011 / Sample TP no. 11 (receiver)

   S_______ _____________ ____________________________
A  Service  Dir  Layout           Description                  State    Sub.
_  SAMPLE-1 Send SAMPLE-LAYOUT    Test sample pgm to verify Mai          No
S  SAMPLE-1 Recv SAMPLE-LAYOUT    Test sample pgm to verify Mai          No

Command  ===>
F1=Help      F3=Exit      F8=Forward   F12=Cancel
```

*Figure 19. Mailroom-Services Available for Subscription (Receiver)*

Type **S**, for Subscribe, in the Action field next to *SAMPLE-1 Recv SAMPLE-LAYOUT*, and you get the panel shown in Figure 20.

```
KBEICM2I            Insert new MailRoom Receive Subscription               IMB

Press Enter to insert new Receive Subscription

Subscription Data
Service name . . . . . : SAMPLE-1
Description. . . . . . : Test sample pgm to verify MailRoom
Destination Scenario . . PGM-CICS +
Enabled. . . . . . . . . 1 +
Comments . . . . . . . . ________________________________________

Dest: Program/CICS
CICS TD Queue. . . . . . KBG5
Userfield. . . . . . . . ________________________________________
Send which records . . . ________ +
Format of M-Record . . . ________ +
Destination Exit . . . . ________ +
Exit parameters. . . . . ________________________________________
Dest Accounting Info . . ________________________________________

Service Control info
Output Schedule  . . . . ________ +
Acknowledgment level . . 2 +
Overdue time . . . . . . _________

Command  ===>
F1=Help      F3=Exit      F4=Prompt    F12=Cancel
```

*Figure 20. Insert new MailRoom Receive Subscription*

In this panel, enter these values:

**Destination Scenario** PGM-CICS

**Enabled** 1

Press Enter to update the panel and enter these values:

**CICS TD Queue** KBG5

**Acknowledgement level** 2

Press Enter to accept the values. Return to the Trading Partners panel (Figure 13 on page 61).

Type **S**, for Subscriptions, in the Action field next to *Trading Partner 000800012*, and you get the panel shown in Figure 21.

```
KBEDBMCL                Subscribe to MailRoom Services                   IMB

Type one or more action codes, then press Enter.
Action codes: S=Subscribe  U=Unsubscribe  M=Modify  T=TP Subscribers

Trading Partner: 123 / 000800012 / Sample TP no. 12 (receiver)

   S_______ _____________ ____________________________
A  Service  Dir  Layout           Description                  State    Sub.
_  SAMPLE-1 Send SAMPLE-LAYOUT    Test sample pgm to verify Mai          No
S  SAMPLE-1 Recv SAMPLE-LAYOUT    Test sample pgm to verify Mai          No

Command  ===>
F1=Help      F3=Exit      F8=Forward   F12=Cancel
```

*Figure 21. Mailroom-Services Available for Subscription (Receiver)*

Type **S**, for Subscribe, in the Action field next to *SAMPLE-1 Recv SAMPLE-LAYOUT*, and you get the panel shown in Figure 22 on page 64.

```
KBEICM2I          Insert new MailRoom Receive Subscription              IMB

Press Enter to insert new Receive Subscription

Subscription Data
Service name . . . . . : SAMPLE-1
Description. . . . . : Test sample pgm to verify MailRoom
Destination Scenario . . MAIL____ +
Enabled. . . . . . . . . 1 +
Comments . . . . . . . . ________________________________________

Dest: Mail
Mail address . . . . . . HO: XXUSERID at YYSYSTEM_______________ +
Send mode. . . . . . . . ________ +
Codepage conversion. . . ________ +
Subject. . . . . . . . . ________________________________________
Filename . . . . . . . . ________________________________________
Sender override. . . . . ________________________________________
Send which records . . . ________ +
Format of M-Record . . . ________ +
Destination Exit . . . . ________ +
Exit parameters. . . . . ________________________________________
Dest Accounting Info . . ________________________________________

Service Control info
Output Schedule  . . . . ________ +
Acknowledgment level . . 0 +
Overdue time . . . . . . _________

Command  ===>
F1=Help      F3=Exit      F4=Prompt    F7=Backward  F12=Cancel
```

*Figure 22. Insert new MailRoom Receive Subscription*

In this panel, enter these values:

**Destination Scenario** MAIL

**Enabled** 1

Press Enter to update the panel and you get this message:

```
KBE05DI Service has changed type, new attributes are shown
```

Then enter these values:

**Mail address**

Press the Prompt key (F4) to get a list of Mail addresses. Select **XXUSERID at YYSYSTEM**

**Acknowledgement level**

0

Press Enter to accept.

## Checking Subscriptions

Return to the Trading Partners panel (Figure 13 on page 61).

Type **S**, for Subscriptions, in the Action field next to *Trading Partner 000800012*, and you get the panel shown in Figure 21 on page 63. Type **T**, for TP Subscribers in the Action field next to *SAMPLE-1 Send SAMPLE-LAYOUT* and you get the panel shown in Figure 23.

```
KBEDGMCL          Trading Partners subscribing to Service               IMB

Type one or more action codes, then press Enter.
Action codes: S=Select Subscription

Service. . . . :  123 / SAMPLE-1             Sub. Type. . . :  T
Description. . :  Test sample pgm to verify  Src. Type. . . :  <*>
Layout . . . . :  SAMPLE-LAYOUT              Dst. Type. . . :  <*>


A  TP number  Name                          Direction    Method    State
_  000800001  Sample TP no. 1 (sender)       S - Secv    PGM       Enabled
_  000800011  Sample TP no. 11 (receiver)    R - Recv    PGM-CICS  Enabled
_  000800012  Sample TP no. 12 (receiver)    R - Recv    MAIL      Enabled




Command  ===>
F1=Help      F3=Exit      F12=Cancel
```

*Figure 23. Trading Partners subscribing to Service*

This panel shows which subscriptions are associated with the **SAMPLE-1** service.

## Running the verification transaction

You are now ready to run the verification test transaction.

Go to native CICS by either typing the fastpath command **CICS**, or stepping through the panels using **A**,**4**,**C** from the Main Panel.

Type the transaction name **KBG3**.

If the transaction runs successfully this message is displayed:

```
KBGXW3P: CICS Write API processed xxxxxxxxx
```

*xxxxxxxxx* is the generated MailRoom key.

Return to BTB by running transaction **KBH0**.

## Checking Envelope status

Type the fastpath command **ENVST**, to get the panel shown in Figure 24 on page 65.

```
KBAMXMCL              MailRoom Source Envelope Status                   IMB

Type one or more action codes, then press Enter.
Action codes: C=Cancel  E=Events  Q=reQuest  S=Select  X=eXpand

   123 2000-03-25_____ ________ ____________ _____________ ________
A  Cty Arrivaltime     From TP  Envelope Id  Layout          Status    Req.
Q  123 2000-03-17-08.35 000800001 R0S399217   SAMPLE-LAYOUT   FINISH       2









Command  ===>
F1=Help      F3=Exit      F5=Refresh   F6=Bottom    F9=DestEnv   F12=Cancel
```

*Figure 24. MailRoom Source Envelope Status*

This panel shows the status of the envelope you created. You should recognize the envelope from the previous step. Type **Q**, for reQuest, in the Action field, and you get the panel shown in Figure 25.

```
KBAMRMCL              MailRoom Requests in an Envelope                  IMB

Type one or more action codes, then press Enter.
Action codes: S=Select    E=Event     D=Document   V=Versions   P=DI-rePort
              A=sysAck    F=Fail      M=Mail       R=Resend     I=DI-Image

Country code . . . : 123                    From Trading Partner: 000800001

_ _____ ________
A SeqNo Status    To Tp     Layout          Envelope ID  Last update
E 00001 FINISH    000800011 SAMPLE-LAYOUT   R0S399217000 17-20.03.21
_ 00002 FINISH    000800012 SAMPLE-LAYOUT   R0S399217001 17-20.03.21









Command  ===>
F1=Help      F3=Exit      F5=Refresh   F6=Toggle    F12=Cancel
```

*Figure 25. MailRoom Requests in an Envelope*

This panel displays the requests for a particular envelope. The first line, for Trading Partner 000800011 is the document sent to another CICS program. The second line, for Trading Partner 000800012 is the document sent to your mail address.

Type **E**, for Event, in the Action field next to the first document, and you get the screen shown in Figure 26.

```
KBAMEMCL                MailRoom List of Events                         IMB

Type one or more action codes, then press Enter.
Action codes: T=Text  H=Help  J=Jump to Envelope  ?=Entire Message text

Country code . . . : 123              Layout . . . . . : SAMPLE-LAYOUT
To Tp. . . . . : 000800011            Envelope Id  . . . : R0S399217000
From Tp. . . . . : 000800001          Message Language . . UK

_ ________ __________
A Status   Message ID Message text                              Last Update
_ PENDING  KBADXA009  Send to PGM-CICS OK, reply is pending     17-20.06.07
_ IN PROC  KBADTR003  Document read by Read API (Ack lvl 2)     17-20.06.07
_ IN PROC  KBGXR5001  Document received in sample program       17-20.06.07
_ IN PROC  KBGXR5002  Received and printed 00012 lines          17-20.06.07
_ FINISH   KBGXR5003  Document finished in sample program       17-20.06.07









Command  ===>
F1=Help      F3=Exit      F4=Close     F5=Refresh   F6=Bottom    F12=Cancel
```

*Figure 26. MailRoom List of Events (Program)*

This panel displays some of the steps that the sample program processed.

Further information is written to the **CEEMSG** DDname of your BTB CICS job.

Type **E**, for Event, in the Action field next to the second document, and you get the panel shown in Figure 27.

```
KBAMEMCL                MailRoom List of Events                         IMB

Type one or more action codes, then press Enter.
Action codes: T=Text  H=Help  J=Jump to Envelope  ?=Entire Message text

Country code . . . : 123              Layout . . . . . : SAMPLE-LAYOUT
To Tp. . . . . : 000800012            Envelope Id  . . . : R0S399217001
From Tp. . . . . : 000800001          Message Language . . UK

_ ________ __________
A Status   Message ID Message text                              Last Update
_ FINISH   KBADXA002  Send to MAIL OK                          17-20.06.07









Command  ===>
F1=Help      F3=Exit      F4=Close     F5=Refresh   F6=Bottom    F12=Cancel
```

*Figure 27. MailRoom List of Events (Mail)*

This panel displays some of the steps that the sample program processed.

Logging of the mail transmission is written to the **KBHMLOG** DDname of your BTB CICS job.

Check your Mail Box for the document sent to your mail address.

This completes the verification test.

# Chapter 5. Implementing your production environment

When your BTB test environment is verified, you can implement the production environment.

## Preparing CICS and IMS

All the changes carried out for the test environment must now be repeated for production. You can use the DFHCSDUP sample from KBH.R450.RUN to create the IMB group list or you can use the DFHCSDUP utility to copy the list and the definitions from your test CSD to the production CICS CSD. Refer to the CICS library for more information about defining resources.

## Copying the load libraries

Copy the data to production libraries using the procedures in place at your organization. The entire contents of the load libraries must be copied to the production libraries.

Here is a list of the libraries:

**DPAPLOAD** Contains signon, BEC and PEP modules.

**LOAD** Contains batch modules.

**TPCLOAD** Contains CICS modules to be copied to your CICS load data set.

**TPILOAD** Contains IMS modules to be copied to your IMS load data set.

**PSBLIB** Contains PSBs to be copied to your PSBLIB data set.

**TFORMAT** Contains BEC MFS format to be copied to your TFORMAT data set.

**Note:** The DPAPLOAD data set must be copied to a protected data set. Concatenate this data set close to the top of DFHRPL.

## Copying the DBRMs

Copy all the DBRMs to a production DBRM data set. You must keep the load libraries and the DBRMs in synchronization.

## Preparing DB2

Use the procedures in place at your organization to establish a production DB2 environment. You can adapt the jobs you used for the test setup.

© Copyright IBM Corp. 1992, 2002

## Binding the collection

You must bind a new set of packages in another collection on the production system.

You can adapt the IMBINDPA job for the production DB2 system, referring to the production DBRM data set you created earlier, and using the package owner, and thereby point to the production tables.

If you want to use the TIE-MQ scenario, you must adapt the BIND member IMBNDPK1 and run job IMBINPA1.

The same applies for the DataInterchange packages. The IMBINDPA job can be used. Remember to refer to the BIND member EDIBNPKG.

## Binding the plans

You must bind all the plans to your production tables. You can use the same IMBIND (and, optionally IMBIND1) jobs used in the test environment. If you chose to enable for a specific CICS, you should use the name for your production CICS system.

## Setting up DataInterchange

Use the DataInterchange *export* utility to export definitions from your test environment. Import them using the DataInterchange *import* utility. Remember to include the BTB verification definitions to verify the production system.

---

## Setting up Expedite

There is no utility to export or import the Expedite/CICS setup, but you can use IDCAMS to REPRO the EXPDSRC data sets. Refer to the Expedite/CICS books for more information.

---

## Setting up TCP/IP

Access control via TCP/IP is enforced via a security exit in the CICS TCP/IP Sockets Interface. This module, normally named EZACICSE, can reject incoming TCP/IP requests. This functionality is utilized in BTB to check if incomming TCP/IP addresses or hostnames are registered in the BTB Electronic Address DB2 table.

In releases of CICS TCP/IP Sockets Interface prior to TCP/IP Version 3 Release 2, the CICS TCP/IP Sockets Interface would attempt to invoke the security exit EZACICSE before accepting incoming requests. BTB ships this module and it will automatically be used.

In releases of CICS TCP/IP Sockets Interface after TCP/IP Version 3 Release 2, configuration and startup of the Sockets Interface is improved. Configuration is achieved using the CICS transaction EZAC, and startup and shutdown of the Interface is controlled by programs in the CICS PLT, using information held in a configuration file. The security exit is not automatically invoked. Instead, the listener configuration must be customized, using EZAC, to specify the security exit EZACICSE (see Figure 28 on page 69).

Enter this command in native CICS:

```
EZAC,ALter,LISTENER
```

In the next screen, enter the CICS APPLID and listener transaction name and you get the panel shown in Figure 28.

```
EZAC,ALter,LISTENER
OVERTYPE TO ENTER

APPLID       ===> TESTCICS            APPLID of CICS System
TRANID       ===> CSKL                Transaction Name of Listener
PORT         ===> 01812               Port Number of Listener
IMMEDIATE    ===> YES                 Immediate Startup   Yes|No
BACKLOG      ===> 040                 Backlog Value for Listener
NUMSOCK      ===> 100                 Number of Sockets in Listener
MINMSGL      ===> 004                 Minimum Message Length
ACCTIME      ===> 060                 Timeout Value for ACCEPT
GIVTIME      ===> 005                 Timeout Value for GIVESOCKET
REATIME      ===> 005                 Timeout Value for READ
FASTRD       ===> YES                 Read Immediately    Yes|No
TRANTRN      ===> YES                 Translate TRNID     Yes|No
TRANUSR      ===> YES                 Translate User Data Yes|No
SECEXIT      ===> EZACICSE            Name of Security Exit
WLM groups   ===>             ===>             ===>


PRESS ENTER TO CONFIRM ALter       FUNCTION
                                                    APPLID = TESTCICS

PF               3 END                          9 MSG          12 CNCL
```

*Figure 28. EZAC transaction*

Figure 28 shows the panel where you specify the TCP/IP security exit.

In releases of CICS TCP/IP Sockets Interface after TCP/IP Version 3 Release 2, you must include this data set in your CICS JCL:

```
//SYSTCPD DD DSN=TCPIP.SEZAINST(TCPDATA),DISP=SHR
```

This is needed to enable DNS look-ups, so that the TCP/IP host name resolver can locate the domain name server address. SYSTCPD explicitly identifies which data set is to be used to obtain the parameters defined by TCPIP.DATA, which describes the stack you want to use if there are multiple TCP/IP stacks running.

Also, ensure TCP/IP program EZACIC25 is defined in your CICS system to run in EXECKey CICS, as shown here:

```
EXECKey      : Cics              User | Cics
```

**Note:** If you install your programs using the default CICS-supplied autoinstall program, EZACIC25 will be installed incorrectly. You must explicitly install the program to use EXECKey CICS. BTB is delivering a program definition of EZACIC25 defined with EXECKey CICS.

## BTB registrations

If you have only a few definitions, you can redefine them. If you have many registrations in your test environment that you want to migrate to the production environment, you can use SQL INSERT statements from QMF or SPUFI to insert new rows selected from your test tables. If your test tables are not in the same DB2 system as your production tables, setup a Distributed Data Facility (DDF) link between the two DB2 system and define aliases in the production DB2 system, pointing to the test DB2 tables (use the *ALIAS members in KBH.R450.SQL). You can then select through the ALIASes from the test system, and insert them in the production system.

Remember to insert in the *child* tables before you insert in the *parent* tables. If you need all the tables, you can unload them on the test system and load them on the production system. You can use the KBH.R450.RUN(*LOAD) jobs as skeletons.

## Starting your production Business Transaction Broker system

Start the CICS system and repeat the verification tests described in Chapter 4, “Verifying Business Transaction Broker” on page 59.

# Chapter 6. Understanding the archiving function

This chapter describes the BTB archiving function.

## Introducing BTB archiving

The archiving function consists of five groups of logically-linked tables. One of the groups handles the Transport tables and for this group the archiving function can either delete data from tables and archive the deleted data in a sequential data set, or simply delete data from tables.

For the other four groups the data is deleted from the tables and archived in sequential data sets.

The five groups of tables are:

- MailRoom Transport tables group
- ASCA tables group
- Error Message table group
- Export table group
- Administration table group

There are two general jobs in KBH.R450.RUN to be run when the archive function is installed:

- KBHICGDG - create GDG data sets for image copies
- KBHUAGDG - create GDG data sets for unload data

There are a number of general utility members containing DB2 load control information in KBH.R450.UTIL that has to be customized if another creator than *KBHTEST* was used to qualify the BTB DB2 tables:

- KBDTAELK
- KBDTALLK
- KBDTAXLK
- KBDTDILK
- KBDTENLK
- KBDTERLK
- KBDTESLK
- KBDTETLK
- KBDTEVLK
- KBDTMGLK
- KBDTRQLK
- KBDTTALK
- KBDTTCLK
- KBDTTGLK
- KBDTTILK
- KBDTTRLK

© Copyright IBM Corp. 1992, 2002

## Archiving of MailRoom Transport tables group.

In this group you can either delete and archive data from Transport tables or simply delete the data from the tables. The option used depends upon your business requirement. If the business need is to archive data to retain for later access, the archiving option should be used. If there is no business need to access data later, the delete option should be used.

Another option is the status. It is possible to define what status the envelopes should be in to be a candidate for achiving. The proper status for the installation should be defined in Sundry panel.

The Transport tables are:

**KBDTEN** Envelope table
**KBDTRQ** Request table
**KBDTET** Event text table
**KBDTEV** Event status table
**KBDTTG** Total transport table control
**KBDTTC** Transport table control
**KBDTTA** Transport appldata unique table
**KBDTTR** Transport table document data
**KBDTTI** Transport table index
**KBDTMG** MailRoom Group table

There are three jobs to run. The first job makes an Image Copy of all the tables in the group, so that you have a copy to recover from if the archiving and delete job fails. The second job deletes and archives the tables. The third job makes an Image Copy of the tables.

The jobs must be customized to your environment before running. The jobs to run are in KBH.R450.RUN:

**KBDUTL1A** Image Copy
**KBDUTL1B** Delete and archive data
**KBDUTL1A** Image Copy

KBDUTL1B uses procedures which must be customized to your environment before executing. The procedures used are in KBH.R450.PROCLIB:

**KBDUTLUA** Unload for archiving procedure
**KBDUTLUK** Unload for keeping procedure
**KBDUTLLK** Load keep procedure

Some of the SQL members used in the jobs and procedures must be customized to your environment before executing. The SQL members to be changed are listed in the jobs.

These SQL members specify the data base and tablespaces. They must be customised only if you are using non-standard BTB data base or tablespace names:

- KBDSENB
- KBDSRQB
- KBDSETB
- KBDSEVB
- KBDSTGB

- KBDSTCB
- KBDSTAB
- KBDSTRB
- KBDSTIB
- KBDSMGB

These members contain SQL code to unload data to be archived. Customisation is required only if another creator than *KBHTEST* has been used:

- KBDTENUA
- KBDTRQUA
- KBDTETUA
- KBDTEVUA
- KBDTTGUA
- KBDTTCUA
- KBDTTAUA
- KBDTTRUA
- KBDTTIUA
- KBDTMGUA

These members contain SQL code to unload data to be retained. Customisation is required only if another creator than *KBHTEST* has been used:

- KBDTENUK
- KBDTRQUK
- KBDTETUK
- KBDTEVUK
- KBDTTGUK
- KBDTTCUK
- KBDTTAUK
- KBDTTRUK
- KBDTTIUK
- KBDTMGUK

The load procedure KBDUTLLK sorts the data to be loaded and the input sort is in the utility library. As the Transport table data KBDTTR table can be very large, there is a *filesize* statement which must be customised. The UTIL member is in KBH.R450.UTIL:

**KBDTTR** Transport table document data

## Define proper status in Sundry panel.

There are different needs for which kind of request there are candidates for archiving or deleting. In one installation request of all kinds of status are candidates - in another installation perhaps only request in status FINISH are candidates. In the Sundry panel the the proper status are defined. Default values are: CANCEL, FAIL, FAIL-P, FINISH and LOCK.

```
KBHLJMCL                    Sundry Prompt Texts                        IMB

Type one or more action codes, then press Enter.
Action codes: D=Delete  I=Insert  C=Copy  M=Modify  S=Select  T=Test

   ____  ___  __  ARCHSTAT  ________________  ________________________________
A  Sys   Cty Lang Item      Value             Description
_  KBA   000  UK  ARCHSTAT  CANCEL            Status code CANCEL is valid
_  KBA   000  UK  ARCHSTAT  FAIL              Status code FAIL is valid
_  KBA   000  UK  ARCHSTAT  FAIL-P            Status code FAIL-P is valid
_  KBA   000  UK  ARCHSTAT  FINISH            Status code FINISH is valid
_  KBA   000  UK  ARCHSTAT  LOCK              Status code LOCK is valid
```

*Figure 29. MailRoom Sundry Table panel*

## Details of a proper status

```
Appl. System . . . . . : KBA
Country code . . . . . : 000
Language . . . . . . . : UK
Sundry Item. . . . . . : ARCHSTAT
Value (char) . . . . . : FINISH
Value.(integer). . . . :          0
Value.(decimal). . . . :          0.0000
Description. . . . . . :
Status code FINISH is valid for archiving
```

## Define archive and delete options

Before the archiving function can become active, a set of parameters must be entered in the Sundry table. Use the BTB fastpath command SUNDRY to maintain the entries.

Here are some sample entries in the Sundry table:

```
Sys Cty Lang Item      Value    Description
KBA 000  UK  ARCHIVE            Default, archive after 1/2 year
KBA 000  UK  ARCHIVE   ARCH30   Archive after 30 days
KBA 000  UK  ARCHIVE   DELETE30 Delete after 30 days
```

## Default option

```
Appl. System . . . . . : KBA
Country code . . . . . : 000
Language . . . . . . . : UK
Sundry Item. . . . . . : ARCHIVE
Value (char) . . . . . :
Value.(integer). . . . .        183
Value.(decimal). . . . .          0.0000
Description. . . . . . .
Default, archive after 1/2 year
```

**Note:** When the archive function is used, the number of days should be entered in the *Value.(integer)* field. This value indicates the time period in days for data to be kept. In this sample all data less than 183 days old will be retained.

## Archive option

Here is an example of an archive option:

```
Appl. System . . . . . : KBA
Country code . . . . . : 000
Language . . . . . : UK
Sundry Item. . . . . : ARCHIVE
Value (char) . . . . . : ARCH30
Value.(integer). . . . .         30
Value.(decimal). . . . .          0.0000
Description. . . . . .
Archive after 30 days
```

**Note:** When the Archive function is used, the number of days must be entered in the *Value.(integer)* field. The value indicates until when the data should be archived. In this sample all data more than 30 days old will be deleted and archived.

## Delete option

```
Appl. System . . . . . : KBA
Country code . . . . . : 000
Language . . . . . : UK
Sundry Item. . . . . : ARCHIVE
Value (char) . . . . . : DELETE30
Value.(integer). . . . .          0
Value.(decimal). . . . .         30.0000
Description. . . . . .
Default, keep 30 days
```

**Note:** When the Delete function is used, the number of days must be entered in the *Value.(decimal)* field. The value indicates the time period in days for data to be kept. In this sample all data more than 30 days old will be deleted. Data less than 30 days old will be retained.

## Service panel

A field is provided on the Service screen - Archive profile.

```
Service name . . . . . : KBAZTIMA
Country Code . . . . . : 123
Application System . . . KBAZ
Description. . . . . . . Verification test - TIE to MAIL__________
Subscription Type. . . : R
Source Scenario. . . . . TIE-IMS_ +
Destination Scenario . : MAIL
Enabled. . . . . : 1 +
Document Layout. . . . . TIE-TO-MAIL_____
Archive Profile. . . . . ________ +
Fixed TP Sender. . . . . 009999999 +
Trading partner name . : IBM Test Country users
```

A prompt in this field will give the list of archive profiles made in the Sundry table. As all services will be blank as default it is recommended to have a default Archive profile with blank in the *Archive Profile* field, as shown in the example. The default profile can either be with delete or archive depending on your business need.

## Archiving of ASCA tables group

In this group you can archive data from ASCA tables and keep all the remaining data.

The ASCA tables are:

**KBDTDI** ASCA DI log table
**KBDTAE** ASCA Envelope table
**KBDTAX** ASCA Expedite log table

There are three jobs to run. The first job makes an Image Copy of the tables so you can recover if the archiving and delete job fail. The second job deletes and archives the tables. The third job makes an Image Copy of the tables. The jobs should be customized to the environment before running. All changes are described in the members and the jobs to run are:

**KBDUTL2A** Image Copy
**KBDUTL2B** Delete and archive data
**KBDUTL2A** Image Copy

The job KBDUTL2B uses the same procedure as KBDUTL1B. The procedures should be customized to the environment before executing. All changes are described in the members and the procedures used are:

**KBDUTLUA** Unload for archiving procedure
**KBDUTLUK** Unload for keeping procedure
**KBDUTLLK** Load keep procedure

Some of the SQL used in the jobs and procedures must be customized to the environment before running. The SQL members to be changed are listed in the jobs.

The following SQL members specify the data base and tablespaces and must be customised only if you are using non-standard BTB data base or tablespace names:

- KBDSDIB
- KBDSAEB
- KBDSAXB

SQL code to unload data to be archived. Customisation is required only if another creator than *KBHTEST* has been used:

- KBDTDIUA
- KBDTAEUA
- KBDTAXUA

SQL code to unload data to be kept. Customisation is required only if another creator than *KBHTEST* has been used:

- KBDTDIUK
- KBDTAEUK
- KBDTAXUK

## Activate archive functionality on ASCA tables

In the SQL members the archive period is specified. The default period is three months, meaning that all data with a date stamp before today's date less three months will be archived and the rest will be kept. See the listed SQL members and customise the period according to your business need.

## Archiving of Error message table group

In this group you can archive data from the Error message table and keep all the rest.

The Error message table is:

**KBDTER** Common Errlorlog table

There are 3 jobs to run. The first job makes an Image Copy of the table to enable recovery if the archiving and delete job fail. The second job deletes and archives the table. The third job makes an Image Copy of the table. The jobs should be customized to the environment before running. All changes are described in the members and the jobs to run are:

**KBDUTL3A** Image Copy
**KBDUTL3B** Delete and archive data
**KBDUTL3A** Image Copy

The job KBDUTL3B uses the same procedure as KBDUTL1B. The procedures must be customized to the environment before executing. All changes are described in the members and the procedures used are:

**KBDUTLUA** Unload for archiving procedure
**KBDUTLUK** Unload for keeping procedure
**KBDUTLLK** Load keep procedure

Some of the SQL used in the jobs and procedures must be customized to the environment before executing. The SQL members which should be changed are listed in the jobs. The SQL members are:

**KBDSERB** The member specifies the data base and tablespace
**KBDTERUA** The SQL code to unload data to be archived
**KBDTERUK** The SQL code to unload data to be kept

## Activate archive functionality on Errorlog table

In the SQL member the archive period is specified. The default period is nine months, meaning all data with date before today's date less nine months will be archived and the rest will be kept. See the listed SQL members and customise the period to the business need.

## Archiving of Export table group

In this group you can archive data from the Export table and keep all the rest.

The MailRoom Export status table is:

**KBDTES** MailRoom Export status table

There are 3 jobs to run. The first job makes an Image Copy of the table so that you can recover if the archiving and delete jobs fail. The second job deletes and archives the table. The third job makes an Image Copy of the table. The jobs should be customized to the environment before running. All changes are described in the members and the jobs to run are:

**KBDUTL4A** Image Copy
**KBDUTL4B** Delete and archive data
**KBDUTL4A** Image Copy

The job KBDUTL4B use the same procedure as KBDUTL1B. The procedures should be customized to the environment before running. All changes are described in the members and the procedures used are:

**KBDUTLUA** Unload for archiving procedure
**KBDUTLUK** Unload for keeping procedure
**KBDUTLLK** Load keep procedure

Some of the SQL used in the jobs and procedures must be customized to the environment before running. The SQL members to be changed are listed in the jobs. The SQL members:

**KBDSESB** The member specifies the data base and tablespace
**KBDTESUA** The SQL code to unload data to be archived
**KBDTESUK** The SQL code to unload data to be kept

## Activate archive functionality on MailRoom Export status table

In the SQL members the archive period is specified. The default period is nine months, meaning all data with a date stamp before today's date less nine months will be archived and the rest will be kept. Look in the listed SQL members and customise the period according to your business need.

---

## Archiving of Administration table group

In this group you can archive data from the Administration table and keep the rest.

The Administration table is:

**KBDTAL** BTB Administration log table

There are three jobs to run. The first job makes an Image Copy of the table so you can recover if the archiving and delete job fails. The second job deletes and archives the table. The third job makes an Image Copy of the table. The jobs should be customized to the environment before running. All changes are described in the members and the jobs to run are:

**KBDUTL5A** Image Copy
**KBDUTL5B** Delete and archive data
**KBDUTL5A** Image Copy

The job KBDUTL5B uses the same procedure as KBDUTL1B. The procedures should be customized to the environment before running. All changes are described in the members and the procedures used are:

**KBDUTLUA** Unload for archiving procedure
**KBDUTLUK** Unload for keeping procedure
**KBDUTLLK** Load keep procedure

Some of the SQL used in the jobs and procedures must be customized to the environment before running. The SQL members to be changed are listed in the jobs. The SQL are members are:

**KBDSALB** The member specifies the data base and tablespace
**KBDTALUA** The SQL code to unload data to be archived
**KBDTALUK** The SQL code to unload data to be kept

## Activate archive functionality on BTB Administration log table

In the SQL member the archive period is specified. The default period is one month, meaning all data with date before today's date less one month will be archived and the rest will be kept. See the listed SQL members and customise the period according to your business need.

# Chapter 7. Performance, tuning, and maintenance

This chapter provides information on performance, tuning and maintenance of BTB.

## The basic system

Tuning of the underlying MVS system, including CICS, DB2, and CSP depends upon your own particular environment and requirements. The sections in this chapter describe some tuning techniques that can enhance the operation of your BTB system.

## CICS tuning

Consider these areas when tuning your CICS system:

- SIT parameters
- Transaction classes
- DB2 parameters
- Data tables
- LSR pools
- Inter-system communication

## SIT parameters

**SUBTASKS=1** Setting SUBTASKS to 1 causes CICS to use an additional, concurrent mode, task control block (TCB), to perform subtasking functions. Subtasking can be useful in CICS systems that use VSAM, such as BTB. With SUBTASKS=1, all VSAM file control WRITE requests are subtasked and all VSAM browse GETNEXT requests are not subtasked. Refer to *CICS Transaction Server for OS/390 Performance Guide*.

**MXT=***nn* When determining your maximum tasks value, you must also consider the number of threads defined in the DB2CONN. If you want to limit resource usage, you can specify a MXT value of less than the number of threads in the DB2CONN. However, this can have throughput implications.

## Transaction classes

BTB provides transaction class definitions designed to limit timeouts and deadlocks. It must be emphasized that these provided transaction class definitions are samples. Therefore examine these definitions to determine if they are suitable for your environment. The TRANCLASS parameter for a transaction corresponds to the number of DB2 threads defined for the related transaction. So if you change the TRANCLASS value, you must also adjust the DB2-parameters. This is however only the case if thread waits are not overflowing to the pool (see “DB2 parameters (RCT)” on page 82). In the sample (see RDO definitions in CICS member KBARDO) there is a specific transaction class limit for the most important transactions. Two comments on that:

- If you only use a subset of BTB MailRoom remove the transaction class limits for those functions not used. Increase the transaction class limits corresponding to the used functions if necessary for throughput.

© Copyright IBM Corp. 1992, 2002

- Consider collecting individual transaction class limits in one common transaction class for transactions with same priority (medium or low) and same base functionality, e.g. either source or destination. This will increase throughput so unused "pipes" in e.g. SAP destination high priority (KBKS) can be used in MQ destination high priority (KBKQ). So consider the common transaction class limit as a pool of pipes for work with same priority and same base function. See also the description of the CICS transaction class definitions supplied with BTB on page 15.

## DB2 parameters (RCT)

You can adjust the DB2 definitions (RCT) provided with BTB to suit your needs. You should consider throughput, total number of threads, and the priority of BTB when deciding which parameters to change. Important parameters to consider are

- The priority of the pool entry threads compared to the priority of the entry overflowing to the pool. Make sure that work with lower priority is not getting high priority by overflowing to the pool.
- High priority work should also have the DB2 work priority set to high. This is above the CICS main TCB that is used by all transactions including the low priority transactions. This will enforce that CICS work of low priority can not interfere with DB2 work with high priority.
- ACCOUNTREC, which determine processing overhead regarding sign-on, sign-off, and reuse.

## Data tables

To improve VSAM record handling, consider defining this DataInterchange data set as CICS-maintained data table:

- EDIHELP

This data set are suitable candidate to be data table because is has little update activity compared to retrieval rate. For more information about data tables in CICS, refer to *CICS Transaction Server for OS/390 Resource Definition Guide*.

## LSR pools

These DataInterchange and Expedite/CICS data sets will benefit from being defined in an LSR pool:

- EDISCRN
- EXPDSRC
- EXPRDAT
- EXPSDAT
- EXPDPTF

## Inter-system communication

In the sample ISC link definitions provided with BTB, only two VTAM sessions are defined between front-end and back-end. To avoid *collisions*, you can increase this number (for example, to four parallel sessions). Remember to align IMS TERMINAL, IMS SUBPOOL, CICS NETNAMEQ and VTAM LU definitions.

# DB2 tuning

## SQL

The SQL statements provided with BTB and the selected indexes provide optimum performance and should not be changed.

## Indexes

It is recommended you use type 2 indexes because this can provide more locking flexibility and better response times. If the default for index creation at your organization is not type 2, you should change all of the BTB-supplied CREATE INDEX statements to reflect this.

## LOCKSIZE

You should use LOCKSIZE ROW on high access DB2 tables. This will allow more parallel processes to read and update table rows without introducing locks (if the rows in the table are in same page). A type 2 index is a prerequisite for using LOCKSIZE ROW.

To help avoid deadlocks and rollbacks, it is recommended that you use LOCKSIZE ROW on these tables:

**Transport tables** KBDTTG, KBDTTC, KBDTTA, and KBDTTI

**Status tables** KBDTEN, KBDTRQ, and KBDTEV

It is not recommended to use LOCKSIZE ROW for the mailroom transport table KBDTTR. This is because this table will have an update for every document line and will for that reason accumulate too many DB2 locks before being released.

## Maintenance

Examine the DB2 tables supplied with BTB and decide if you need to make any changes specific to your organization. Consider these points:

- REORG frequency to keep the tables in clustering sequence
- FREESPACE and PAGE size for expected updates
- Estimate total size
- RUNSTAT and REBIND packages frequently to optimize DB2 access paths
- I/O parallellism to improve concurrency

Run the RUNSTATS and STOSPACE utilities regularly and monitor the condition of the tables. REORG the tables on a regular basis and REBIND after maintenance is applied to the tables. Also rebind after a RUNSTAT.

## Static DB2

All BTB DB2 applications must run in static DB2. Rebind the packages periodically after a RUNSTAT and STOSPACE.

Do not change any of the BTB-supplied plans. If you have applications with DB2 access running under BTB and want to make them run in static mode, define the application to run in its own CICS transaction and DB2 plan.

## Understanding Business Transaction Broker Health Check

If, for example, a CICS ISC link fails and data is not received by or transferred by BTB, this could have a major impact on your business. The BTB Health Check program works with AOC/MVS to check aspects of the external environment upon which BTB is dependant.

One function of AOC/MVS is to periodically check all CICS connections. AOC/MVS can be set up to call a user program which can perform more specific checks on, for example, logical unit (LU) names, and return any error conditions to AOC/MVS. AOC/MVS can then take appropriate remedial action.

## Mandatory Health Checks

DB2 availability is always checked, because DB2 is required for the following optional health checks.

## Optional Health Checks

To to be able to perform the different Health Checks the main program examines entries in the WC table (see Figure 30 on page 85).

You add Health Check entries to the WC table by entering the BTB fastpath command **WCEDIT** (see "Customizing the Working Criteria (WC) table" on page 45).

The Health Check entries in the WC table are in this format:

**HEALTHCHKnnn** nnn is an incremented number, starting at 001. The Health Check program looks for the next entry in the table until no more entries are found.

**Cty** Must be 000.

**Value** Positions 0-7 contain the name of the program to be linked to. Position 8 is blank character. The remaining 23 positions can optionally contain program parameters.

The same program can be called many times with different parameters.

To ignore an entry, enter *DUMMY* in positions 0–5.

Figure 30 on page 85 shows an example of some Health Check entries in the WC table.

```
KBHWBMIL               Working Criteria Table Entries                    IMB

Type one or more action codes, then press Enter.
Action codes: S=Select  I=Insert  C=Copy  M=Modify  D=Delete


A  WC-Key            Cty  Value                      Comment
_  HEALTHCHK001      000  KBHHC1P  KBHPING 123       BEC ping for New York
_  HEALTHCHK002      000  KBHHC2P                    TCP availability check
_  HEALTHCHK003      000  DUMMY                      MQS availability check
_  HEALTHCHK004      000  KBHHC4P  009.999.999.096   Check if PRODMVS.DK...
_  HEALTHCHK005      000  KBGHCKP  FIELD FIELD       Skeleton program test









Command  ===>
F1=Help      F3=Exit      F6=Toggle    F8=Forward   F12=Cancel
```

*Figure 30. WC Table Health Check entries*

## Health Check check programs provided by BTB

These Health Check programs are provided by BTB:

**KBHHC1P** *Ping* check module—checks if there is a connection to a specified CICS or IMS application and location combination.

The application and location must be supplied in the *Value* field separated by a blank character.

**KBHHC2P** TCP connection module—checks if the TCP connection is available to CICS.

**KBHHC3P** MQSeries connection module—checks if the MQSeries connection is available to CICS.

**KBHHC4P** Server response check module—checks if a server is responding based, on an IP address and a port. Because the TCP connection must be available, the KBHHC2P program must have been called before the KBHHC4P module is called.

The IP address and the port must be supplied in the *Value* field separated by one blank character.

## New Health Check programs

You can write your own programs to perform other checks. There is a skeleton Health Check PL/1 program in KBH.R450.PLI(KBGHCKM).

You must define your new program in the WC table using the next available HEALTHCHK suffix.

## Testing Health Check programs

Enter **HCHK** from BTB or from native CICS. You get the panel shown in Figure 31.

```
Intelligent Message Broker                              IBM Global Services

                            IMB call to Health program

Input:
Ack / Noack. .                  (Leave blank)



Output:

Data 1 . . . .
Data 2 . . . .









F3=Exit
```

*Figure 31. Health Check*

Press Enter. If *ACK* is displayed, the Health Check was successful. If *NOACK* is displayed, errors were found during the Health Check

For details on how to define program KBHHCMP to AOC/MVS, refer to *AOC/MVS Planning and Installation*.

## Understanding the CICS Program Error Program (DFHPEP)

The Program Error Program (PEP) consists of:

**KBCPEPP** The PL/1 load module (in KBH.R450.DPAPLOAD).

**KBCPEP** The PEP map.

**KBCPHL** The PEP help map.

If a task abends, the Abend Control Program (DFHACP) links to DFHPEP. In DFHPEP you can handle various error conditions. The DFHPEP provided with BTB contains processing to suppress ATCV abends. For other CICS abends, a map is presented informing you an error has occurred. If the abending task is an BTB task (as defined in PL/1 include member KBCIMAB), the user is presented with the BTB sign-on screen, preventing access to native CICS.

When a terminal timeout occurs resulting in an AZCT abend, DFHPEP is invoked. The user will not be logged off, but will receive the the BTB Main Panel shown in Figure 5 on page 59.

The source code for the list of transactions to process is in KBH.R450.PLINCL(KBCTOUT). It is a 200—byte table with 43 slots available for

tailoring. Modify the table and recompile and link DFHPEP and KBCPEPP by running KBH.R450.RUN(KBCPEPP).

## Local adaptations

The map source-code is provided. You can change the language of the text by editing the source-code.

## Selective Timeout

Two sample CICS RDO profiles are provided with BTB. KBHPROF specifies RTIMOUT=6000 (60 minutes and 00 seconds). Transactions defined with this profile will timeout after 60 minutes of inactivity. The transactions KBH0–KBH6, and KBHE are defined with this timeout value. KBIPROF specifies RTIMOUT=500 (5 minutes and 00 seconds). The transactions KBIM and KBI2 are defined with this timeout value.

## Linkage considerations

Some of the components described have naming restrictions. Most of the components must be linked with an alias to fulfill compatibility or CICS restrictions. Refer to the comments in each of the components for what the aliases should be.

# Glossary

This glossary defines terms and abbreviations that are used in the BTB library. If you do not find the term you are looking for, refer to the index, or to the *IBM Dictionary of Computing*, New York: McGraw-Hill, 1994.

## A

**ACF/VTAM**. Advanced Communications Function for the Virtual Telecommunications Access Method product. Synonym for Virtual Telecommunications Access Method (VTAM) product.

**ACF**. See ACF/VTAM.

**AIX**. Advanced Interactive Executive. IBM's implementation of the UNIX operating system.

**Advanced Program-to-Program Communication (APPC)**. The SNA protocol boundary of the presentation services layer of the LU6.2 architecture. APPC is commonly used as a synonym for LU6.2.

**application identifier (APPLID)**. The name by which a logical unit is known in a VTAM network. The CICS APPLID is specified in the APPLID system initialization parameter.

**APPLID**. See application identifier.

**APPC**. See Advanced Program-to-Program Communication.

**audit trail**. A way of tracking and verifying basic information about the status of messages.

**autofail**. An BTB function where old documents in the MailRoom are automatically put in a failed state if they have received no response from external systems after a specified period.

## B

**BEC**. Back-end communication.

**buffer**. An area of storage that is temporarily reserved for use in performing an input/output operation into which data is read or from which data is written.

## C

**CICS**. Customer Information Control System.

**CICS-maintained data table**. A type of CICS data table, for which CICS automatically maintains consistency between the table and its source data set. All changes to the data table are reflected in the source data set and all changes to the source data set are reflected in the data table.

**client/server**. In communications, the model of interaction in distributed data processing in which a program at one site sends a request to a program at another site and awaits a response. The requesting program is called a client; the answering program is called a server.

**command line**. The line at the bottom or at the top of a panel (depending on your panel settings) that provides an alternate way of requesting services rather that using the *Action* field of the panel body.

**copybook**. A COBOL term referring to sections of reusable COBOL code copied into a COBOL program. The equivalent PL/1 function is achieved using %INCLUDE statements, and in assembler a COPY statement is used.

## D

**data set**. The major unit of data storage and retrieval consisting of a collection of data in a prescribed arrangement and described by control information.

**DATABASE 2 (DB2)**. A relational database management system in which data is presented to the user in the form of tables.

**DataInterchange**. A part of IBM EDI Services, DataInterchange is the translation software for EDI. The software converts application data formats into (or from) industry-specific or EDI standards or other fixed application data formats.

**data table**. A file whose records are held in main storage. See also CICS-maintained data table and user-maintained data table.

**DB2**. See DATABASE 2.

**DCT**. See destination control table

**destination control table (DCT)**. The CICS table defining transient data destinations.

© Copyright IBM Corp. 1992, 2002

**DFHCSDUP**. CICS system definition data set (CSD) utility program. It provides offline services for the CSD. It can be invoked as a batch program or from a user-written program running in batch mode or under TSO.

**DI**. See DataInterchange.

**Distributed Program Link (DPL)**. A type of CICS intercommunication which enables CICS to ship LINK requests between distributed CICS (for example Windows) and a host CICS region.

**DPL**. See Distributed Program Link.

# E

**EDI**. See electronic data interchange.

**electronic data interchange (EDI)**. The process of electronically sending specially formatted business documents directly from one computer to another.

**electronic mail (email)**. The process of sending free-formatted messages and formatted files from one computer to another.

**email**. See electronic mail.

**Expedite/CICS**. An IBM licensed program that provides communications and user interfaces to Information Exchange (IE).

# F

**FCT**. See file control table.

**file control table (FCT)**. CICS Table containing the characteristics of the files accessed by CICS file control.

**function key**. A key that causes a specified sequence of operations to be performed when it is pressed. Generally used to refer to keys labelled F*n*, where *n* is a number from 1 to 24.

# I

**IBM Global Network**. The worldwide IBM communications network that provides network solutions and a global information infrastructure.

**IE**. See Information Exchange.

**IGN**. See IBM Global Network.

**BTB**. See Business Transaction Broker.

**IMS**. Information Management System.

**Information Exchange (IE)**. A continuously running CICS application on the IBM Global Network (IGN) that stores and forwards information to Trading Partners.

**Business Transaction Broker (BTB)**. A mainframe-based solution that helps you to achieve business integration by connecting disparate platforms in a heterogeneous network.

**interregion communication (IRC)**. The method by which CICS provides communication between a CICS region and another region in the same processor.

**intersystem communication (ISC)**. Communication between separate systems by means of SNA networking facilities or by means of the application-to-application facilities of VTAM. ISC links CICS systems and other systems, and may be used for user application to user application communication, or for transparently executing CICS functions on a remote CICS system.

**I/O**. Input/output.

**IRC**. See interregion communication.

**ISC**. See intersystem communication.

# J

**job control language (JCL)**. Control language used to describe a job and its requirements to an operating system.

**journal control table (JCT)**. CICS table in which the system log and user journals and their characteristics are described to CICS for access through journal control. The JCT contains control information and operating system control blocks describing each journal.

**JCL**. See job control language.

**JCT**. See journal control table.

# L

**LSR**. See local shared resources

**local shared resources (LSR)**. Files that share a common pool of buffers and a common pool of strings; that is, control blocks supporting the I/O operations.

**LU6.1**. Type of logical unit used for processor-to-processor sessions. CICS to IMS intercommunication uses LU6.1 sessions.

**LU6.2**. Type of logical unit used for CICS intersystem (ISC) sessions. LU6.2 architecture supports both CICS host to system-level products and CICS host to

device-level products. CICS ISC uses LU6.2 sessions. APPC is the protocol boundary of the LU6.2 architecture.

# M

**MCT**. See monitoring control table.

**MCO**. Multi country operations.

**ME**. Mail Exchange.

**MailRoom**. In BTB, an asynchronous repository for many kinds of EDI between various business applications.

**message**. (1) In message queuing applications, a communication sent between programs. (2) Any piece of data that users send or receive. (3) The smallest subdivision of information that can be sent from one user to another. (4) An instruction or explanation on the screen that tells you what the system is doing, or warns you that the system has detected an error.

**message header**. The leading part of a message that contains information, such as the source or destination code of the message.

**MLS**. Multi language support

**monitoring control table (MCT)**. CICS table containing monitoring requirements for the CICS region.

**MQ**. See MQSeries.

**MQSeries**. A family of IBM licensed programs that provides message queuing services.

# N

**national language support (NLS)**. Translation requirements affecting parts of licensed programs;for example, translation of message text and conversion of symbols specific to countries.

**NLS**. See national language support.

# P

**panel**. A screen that displays a set of information; for example, a menu, a data entry panel, or a selection list.

**PCT**. See program control table.

**PLTPI**. See program list table.

**PLTSD**. See program list table.

**program control table (PCT)**. A CICS table defining all transactions that may be processed by the CICS system.

**program function (PF) key**. See function key.

**program list table**. A CICS table that contains a list of programs that are to be executed during CICS startup (PLTPI) or during a controlled shutdown (PLTSD).

# R

**RCT**. See resource control table.

**resource control table (RCT)**. A control table that defines the relationship between CICS transactions and DB2 resources. For more details, refer to *IBM DATABASE 2 for MVS/ESA Administration Guide*.

**RACF**. See the Resource Access Control Facility.

**The Resource Access Control Facility (RACF)**. An external security management facility running under MVS.

# S

**SIT**. See system initialization table.

**SNA**. See Systems Network Architecture.

**SQL**. Structured Query Language.

**system initialization table (SIT)**. A table containing parameters used by CICS on startup.

**Systems Network Architecture (SNA)**. The description of the logical structure, formats, protocols, and operational sequences for transmitting information units through and controlling the configuration and operation of networks.

# T

**TCP/IP**. See Transmission Control Protocol/Internet Protocol.

**TP**. See Trading Partner.

**Trading Partner (TP)**. Business associates, such as a manufacturer and a supplier, who agree to exchange information using electronic data interchange.

**Transmission Control Protocol/Internet Protocol (TCP/IP)**. A set of communications protocols that support peer-to-peer connectivity functions for both local and wide area networks.

# U

**user-maintained data table**. A type of CICS data table that has no CICS-supported association with its source data set set after it has been loaded. Changes to the table are not automatically reflected in the source data set.

# V

**Virtual Storage Access Method (VSAM)**. An IBM access method for direct or sequential processing of fixed and variable length records on disk devices.

**VSAM**. See Virtual Storage Access Method.

**VTAM**. Virtual Telecommunications Access Method. See also ACF/VTAM.

# Index


## A

administration table 78
Agreement Set 60, 61
AIX
  client prerequisites 3
  client/server access 1
ALIAS 5, 12, 33
APPC 1, 3, 13
APPL 31
application identifier 21
archiving
  administration table 78
  errorlog table 77
  export status table 77
  image copy 72
  introducing 71
  load procedure 73
  service panel 75
  sundry table 74
  transport tables 71
ASCA 76, 77
asynchronous 1
auditing 2
autofail 46

## B

back-end 15, 23, 82
bibliography xii—xiii
BIND 32, 44, 68
BTB
  *See* Business Transaction Broker
Business Transaction Broker
  archiving 71—79
  auditing 2
  changes in the release xv
  CICS transactions 16
  DataInterchange CICS transactions 19
  enhancements xv
  Expedite/CICS CICS transactions 19
  good morning transaction 21
  implementing 67—70
  installing 7—54
  introducing 1
  logging 2
  maintenance 81—87
  migrating 55—58
  panels 59—65
  performance 81—87
  planning 1—6
  problem determination 19
Business Transaction Broker *(continued)*
  starting 44
  tuning 81—87
  verifying 59—65

## C

CEEMSG 20, 65
changes in this release xv
CICS
  APPLID 21
  assembling tables 15
  back-end 25
  BTB load library 14, 20
  BTB transactions 16
  CEEMSG 20, 65
  COPYBOOKS 14
  CSD 67
  data tables 81, 82
  DataInterchange transactions 19
  DB2 81
  DCT 15, 20, 22, 57
  DFHCSDUP 15, 25
  DFHPEP 14, 86
  DFHRPL 20, 57
  DFHSCDUP 67
  DFHZNEP 14
  DPAPLOAD 14, 20
  DPL 15
  Expedite/CICS 23
  Expedite/CICS transactions 19
  front-end 25
  good morning transaction 21
  GRPLIST 16
  implementing BTB with 67
  ISC 23, 81, 82
  JCL 20
  KBHMLOG 22, 54, 65
  LSR pool 81
  MailRoom transactions 17
  maximum tasks 21, 81
  MCT 24
  migrating BTB 57
  monitoring 21
  performance 81
  PLT 23
  prerequisites 2
  problem determination 19
  program autoinstall 16, 22
  RACF transaction protection 13
  RCT 15, 24, 57
  RDO 14, 22, 24, 29


© Copyright IBM Corp. 1992, 2002

CICS *(continued)*
RTIMOUT 87
setting up 14
SIT 21, 81
Sockets Interface 68
storage 22
tailoring for BTB 14
TCP/IP Sockets 68
transaction classes 15, 81
tuning 81
TWA 14
user ID for BTB 12
CICS TS
*See* CICS
CICS/ESA
*See* CICS
continuous receive 46
CSD 67
CSP
programs 19
tables 5

# D

DASD 4, 9
data tables 81, 82
DataInterchange
CICS RDO consideration 14
CICS transactions 19
DB2 packages 5
EDIB 14
export 68
implementing BTB with 68
import 68
LSR pool 82
setting up 68
DB2
actions before verifying 59
Administration Tool 58
ALIAS 5, 12, 33
BIND 32, 44, 68
DBRMs 67
Distributed Data Facility 70
DSNTEP2 32
errors 20
establishing the environment 39
hints 43
KBHRCT 15
loading tables 36
LOCKSIZE 83
migrating BTB 55
PACKADM 5, 39
plan owner 12
prerequisites 2
QMF 44
RCT 15, 24
DB2 *(continued)*
REORG 83
RUNSTAT 38, 83
setting up 32—44
SQL 70
SQLID 12, 33
STOSPACE 38, 83
SYNONYM 5
THRDA 15
THRDM 15
threads 15
tuning 83
type 2 index 83
unloading tables 35
updating the catalog 38
destination control table 22
DFHCSDUP 15, 25, 67
DFHPEP 14, 86
DFHRPL 20, 57
DFHZNEP 14
DFSMSdss 5, 55
Distributed Data Facility 70
distributed program link 15
DPAPLOAD 14, 20, 44
DSNTEP2 32

# E

Electronic Address 62
enhancements to BTB xv
Envelope 64
errorlog table 77
Expedite/CICS
CICS PLT 23
CICS transactions 19
IE connection 24
implementing BTB with 68
LSR pool 82
setting up 68
export status table 77
EZACICSE 68

# F

fastpath command 45, 59, 84
front-end 23, 82

# G

glossary 89—92
GRPLIST 16

# H

hardware prerequisites 2
HCHK 86

Health Check program
DB2 availability 84
HCHK 86
mandatory 84
optional 84
sample panel 86
Working Criteria table 46, 84
hot buffer data sets 26

# I

IBM Global Network
asynchronous exchange using 1
MailRoom planning 6
IBMMAIL 52, 53
IDCAMS 68
IE
*See* Information Exchange
IGN
*See* IBM Global Network
IMADM 12, 59
IMB xi
implementing BTB
copying DBRMs 67
DataInterchange 68
Expedite/CICS 68
preparing CICS 67
preparing DB2 67
preparing IMS 67
registrations 70
running DFHSCDUP 67
TCP/IP 68
IMS
back-end 27
COMM macro 29
COPYBOOKS 27
hints 43
implementing BTB with 67
LU 6.1 27
MailRoom 27, 29
MFS 27, 28, 30
PSB 27, 30
PSBLIB 67
system generation 27
TERMINAL macro 28
IMUSER 12
Information Exchange
CICS TCT definitons 14
Expedite/CICS 24
mailbox 6
installing BTB
DB2 hints 43
defining the VSAM data sets 26
defining user IDs 11
DFSMSdss restore 8
establishing DB2 environment 39
installing BTB *(continued)*
IMS hints 43
Mailman 52
sample JCL 8
setting up CICS 14—26
setting up DB2 32—44
setting up IMS back-end 27—30
starting BTB 44
updating DB2 catalog 38
VTAM definitions 31
Intelligent Message Broker xi
inter-system communication 23, 81, 82

# K

KBHMLOG 22, 54, 65

# L

Language Environment
*See* LE/370
LE/370 21
backwards compatibility 14
CEEMSG 20
CICS considerations 21
CICS DFHRPL 21
CICS STEPLIB 21
customizing 13
recommended settings 13
SCEECICS 21
SCEERUN 21
LE/MVS
*See* LE/370
LOCKSIZE 83
logging 2
LOGMODE 31
LSR pool 81, 82

# M

mailbox 6
Mailman
establishing 52
Working Criteria table 47
MailRoom
CICS DCT definitions 22
CICS transactions 17
planning 6
prerequisites 3
Sundry Table panel 74
maintaining BTB
archiving 71
CICS 81
DB2 83
MVS 81

MAJNODE 32
MAXACTIVE 15
MCO 5
message format service 27, 28, 30
middleware 1
migrating BTB
  archiving 58
  CICS RDO definitions 57
  DB2 Administration Tool 58
  DFSMSdss 55
  getting the package 55
  loading DB2 tables 55
  Working Criteria table 56
MLS 5
MODETAB 31
monitoring control table 24
MQSeries
  MailRoom prerequisite 3
  support data set 26
multi country operation
  *See* MCO
multi language support
  *See* MLS
MVS 81
MXT 21, 81

# N

naming conventions 6
national language support
  *See* NLS
NLS 5

# O

OS/2
  client prerequisites 3
  client/server access 1
  ping 13, 19

# P

PACKADM 5, 39
panels
  Agreement Sets 60, 61, 62
  Electronic Addresses 62
  entering commands 59
  fastpath command 45, 59, 84
  Health Check 86
  Insert new Agreement Set 60
  Insert new Electronic Address 62
  Insert new Mailroom Service 60
  Insert Receive Subscription 63
  Insert Send Subscription 63
  List of Events 65
  logon panel 59
panels *(continued)*
  MailRoom Requests 65
  Mailroom Services 60, 61, 62
  Mailroom Services in Agreement Set 61
  MailRoom Source Envelope 65
  Main Panel 59
  TCP/IP alter listener 69
  Trading Partners 61, 64
  Working Criteria Table 45, 85
performance
  CICS 81
  DB2 83
  MVS 81
planning for BTB
  DASD requirements 4
  MailRoom 6
  MCO 5
  NLS 5
  prerequisites 3
  security 5
  virtual storage 4
prerequisites
  AIX client 3
  BTB 2
  CICS 2
  CSP 2
  DB2 2
  hardware 2
  MailRoom 3
  MVS 2
  OS/2 client 3
  SAP/R3 client 3
  software 2
  Windows client 3
program autoinstall 16, 22
program control block 27
program load table 23
program specification block 30
PSBLIB 67

# Q

QMF 44

# R

RACF 11
registrations 70
remote buffer cleanup 26
REORG 83
resorce definition online 14, 29
resource control table 57
RTIMOUT 87
RUNSTAT 38, 83

# S

SAP
  R/3 client prerequisites 3
sending comments xiii
Service 60
Sockets 68
software prerequisites 2
SQL 70, 72, 77
SQLID 33
STOSPACE 38, 83
Subscription 62, 64
subtasking 81
SUBTASKS 81
sundry table 74
SYNONYM 5
SYSTCPD 69
system initialization table 21, 81

# T

TCP/IP 1, 68
terminals
  3270 1
  emulated 1
  non-programmable 1
  NPT 1
terminology xi, 89—92
TIE 2
TPCLOAD 44, 57
TPILOAD 57
Trading Partner 61
TRANCLASS 15, 81
transaction classes 15, 81
Transaction Server
  *See* CICS
transaction work area 14
transport tables 71, 73
TSO 11
tuning BTB
  CICS 81
  DB2 83
  MVS 81

# V

verification transaction 64
verifying BTB
  adding a Service 60
  adding an Agreement Set 61
  checking Envelope status 64
  checking Subscriptions 64
  creating a Service 60
  creating a Subscription 62
  creating an Agreement Set 60
  inserting a Electronic Address 62
  logging on 59
verifying BTB *(continued)*
  Main Panel 59
  verification transaction 64
VM 47
VSAM
  32K support 27
  catalog alias 13
  data tables 82
  defining the BTB data sets 26
  ESDS 27
  GETNEXT 81
  hot buffers 26
  IDCAMS 68
  MQSeries support data set 26
  remote buffer cleanup 26
  REPRO 68
  setting up Expedite/CICS 68
  subtasking 81
  WRITE 81
VTAM definitions 31, 82

# W

WCEDIT 27, 45, 56
Windows
  Business Transaction Broker support for 3
  client prerequisites 3
  client/server access 1
  ping 13, 19
Working Criteria table
  32-K support data sets 27
  continuous receive 46
  customizing 44
  DIST 53
  Health Check 84
  IBMMAIL 53
  JES 50
  Mailman 52
  migrating 56
  remote buffer cleanup 26
  Routing 49
  sample panel 45
  SMTP 49
  TOOLS 53
  WCEDIT 27, 45, 84

Printed in the United States of America
on recycled paper containing 10%
recovered post-consumer fiber.

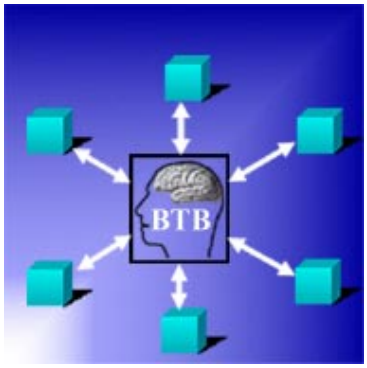


GC27-1581-01