Linux on z Systems and LinuxONE

Device Drivers, Features, and Commands on SUSE Linux Enterprise Server 12 SP3

SC34-2745-04

Linux on z Systems and LinuxONE

Device Drivers, Features, and Commands on SUSE Linux Enterprise Server 12 SP3

SC34-2745-04

Note

Before using this document, be sure to read the information in “Notices” on page 711.

This edition applies to SUSE Linux Enterprise Server 12 SP3 and to all subsequent releases and modifications until otherwise indicated in new editions.

Contents

Summary of changes

This revision reflects changes for SUSE Linux Enterprise Server 12 Service Pack 2.

SUSE Linux Enterprise Server 12 SP3 changes

This editions contains changes related to SUSE Linux Enterprise Server 12 SP3.

New information

- Linux now supports UIDs as persistent identifiers for PCI functions, see "PCI Express support" on page 19.
- Channel paths that are subject to frequent IFCC or CCC errors can now be taken offline automatically, see "Setting defective channel paths offline automatically" on page 145.
- You can now use 2 GB large pages when Linux is running on an LPAR, see Chapter 24, "Large page support," on page 347.
- The **dasdfmt** command now offers a quick format mode for DASD that have previously been formatted with the `cdl` or `ldl` disk layout, see "dasdfmt - Format a DASD" on page 543.
- The **dasdfmt** command and the **zdsfs** commands now check whether a DASD volume is online to another operating system instance, see "dasdfmt - Format a DASD" on page 543 and "zdsfs - Mount a z/OS DASD" on page 674.

Changed Information

- The CPU topology information now includes drawers, see "Examining the CPU topology" on page 334

This revision also includes maintenance and editorial changes. Technical changes or additions to the text and illustrations are indicated by a vertical line to the left of the change.

Deleted Information

- None.

SUSE Linux Enterprise Server 12 SP2 changes

This editions contains changes related to SUSE Linux Enterprise Server 12 SP2.

New information

- You can now read measurement data for PCIe devices, see "Reading statistics for a PCIe device" on page 22.
- The **snipl** tool now supports IPv6 connections between the Linux instance where **snipl** runs and the SE, HMC, or z/VM CP instance that controls the LPARs or guest virtual machines you want to work with, see Chapter 8, "Remotely controlling virtual hardware - snipl," on page 87.
- A HiperSockets™ port can be configured as a member of a Linux software bridge, see "Layer 2 bridge port function" on page 229.
- Priority queueing for QDIO devices now supports IPv6. There are also two new values that you can set, prio_queueing_vlan for VLANs and prio_queueing_skb for other cases. See "Using priority queueing" on page 238.

- NUMA emulation is now available for Linux on z Systems™. See Chapter 22, "NUMA emulation," on page 337.
- A new device driver facilitates hardware-accelerated data compression and decompression through a PCIe-attached Field Programmable Gate Array (FPGA) acceleration adapter, see Chapter 30, "Data compression with GenWQE and zEDC Express," on page 371.
- Information has been added about using hardware-acceleration for in-kernel cryptographic operations, see Chapter 43, "Hardware-accelerated in-kernel cryptography," on page 457.
- There is a new section about obtaining information about your system and its capabilities, Chapter 51, "Displaying system information," on page 491.
- You can now view z Systems specific kernel messages through an app for mobile devices. See "Viewing messages with the IBM Doc Buddy app" on page 494.
- A new command, **cpacfstats**, lets you monitor CPACF activity, see "cpacfstats - Monitor CPACF cryptographic activity" on page 530.
- With new parameters for the **vmur** command, you can control the CLASS, DEST, FORM, and DIST spooling options for virtual unit record devices. See "vmur - Work with z/VM spool file queues" on page 665.
- A new section describes the `fips` kernel parameter, which enables the FIPS mode of operation, "fips - Run Linux in FIPS mode" on page 689.

Changed Information

- You can now IPL from subchannel sets other than 0, see "Booting from DASD" on page 63 and "Attributes for ccw" on page 72.
- The format of SCSI device nodes that are based on bus IDs has changed, see "SCSI device nodes" on page 155.
- The storage-class memory device driver now supports submitting more concurrent I/O requests than the current limit, see "Setting up the storage-class memory device driver" on page 196.
- The qeth device driver now supports offloading checksum operations in layer 2 as well as layer 3, see "Configuring checksum offload operations" on page 246.

This revision also includes maintenance and editorial changes. Technical changes or additions to the text and illustrations are indicated by a vertical line to the left of the change.

Deleted Information

- CLAW devices are no longer supported and the description of the CLAW device driver has been removed.

SUSE Linux Enterprise Server 12 SP1 changes

This editions contains changes related to SUSE Linux Enterprise Server 12 SP1.

New information

- Linux on z Systems now includes a HMC media device driver to access files on removable media at systems that run the HMC. Installers on suitably prepared installation DVDs can use this device driver to install Linux in an LPAR. See the following sections:
  - "Loading Linux from removable media or from an FTP server" on page 67
  - Chapter 29, "HMC media device driver," on page 367

  - "hmcdrvfs - Mount a FUSE file system for remote access to media in the HMC media drive" on page 570
  - "lshmc - List media contents in the HMC media drive" on page 598
- You can now, if needed, tune the behavior of the automatic port scan, see "Controlling automatic port scanning" on page 169.
- New attributes for FCP-attached SCSI devices let you check whether a device is trying to recover, recovery failed, or access is denied. See Table 29 on page 180, and "Recovering failed SCSI devices" on page 183.
- Linux in LPAR mode now supports simultaneous multithreading, see "Simultaneous multithreading" on page 331.
- The cryptographic device driver now exploits the Crypto Express5S (CEX5S) feature, see "Hardware and software prerequisites" on page 438.
- The pseudorandom number generator device driver now supports version 5 of the Message Security Assist (MSA), available as of the EC12 with the latest firmware level. See Chapter 42, "Pseudo-random number device driver," on page 453.
- The support for the z/Architecture® CPU-measurement facilities now includes the CPU-measurement sampling facility, see Chapter 46, "Using the CPU-measurement counter facility," on page 471. A new command helps you to display details about supported and authorized counters and sampling modes, see "lscpumf - Display information about the CPU-measurement facilities" on page 587.
- The **hyptop** command can now display additional data, see "hyptop - Display hypervisor performance data" on page 574.
  - Time data by thread for LPARs with multithreading.
  - Management time for z/VM® mode.

Changed Information

- You can now display the supported forwarding modes of a switch, see "Isolating data connections" on page 248.
- The z/VM watchdog device driver has been replaced by the diag288 watchdog device driver. The new device driver can be used for both Linux on z/VM and Linux in LPAR mode. See Chapter 28, "The diag288 watchdog device driver," on page 363.

This revision also includes maintenance and editorial changes. Technical changes or additions to the text and illustrations are indicated by a vertical line to the left of the change.

Deleted Information

- The mem= kernel parameter has become obsolete and is no longer described.

About this publication

This publication describes the device drivers, features, and commands available to SUSE Linux Enterprise Server 12 SP3 for the control of IBM® z Systems devices and attachments. Unless stated otherwise, in this publication the terms *device drivers* and *features* are understood to refer to device drivers and features for SUSE Linux Enterprise Server 12 SP3 for z Systems.

Unless stated otherwise, all z/VM related information in this document assumes a current z/VM version, see www.vm.ibm.com/techinfo/lpmigr/vmleos.html.

As of July 2017, IBM z Systems is re-branded to IBM Z. In this document, *Linux on z Systems* refers to Linux running on LinuxONE or an IBM mainframe, including all IBM mainframe systems supported by SUSE Linux Enterprise Server 12 SP3 for z Systems. In particular, this includes IBM z13™ (z13), IBM zEnterprise® BC12 (zBC12), IBM zEnterprise EC12 (zEC12), IBM zEnterprise 196 (z196), and IBM zEnterprise 114 (z114) mainframes.

For more specific information about the device driver structure, see the documents in the kernel source tree at `/usr/src/linux-<version>/Documentation/s390`.

For what is new, known issues, prerequisites, restrictions, and frequently asked questions, see the SUSE Linux Enterprise Server 12 SP3 release notes at www.suse.com/releasenotes

You can find the latest version of this publication on the developerWorks® website at www.ibm.com/developerworks/linux/linux390/documentation_suse.html

How this document is organized

The first part of this document contains general and overview information for the z Systems device drivers for SUSE Linux Enterprise Server 12 SP3 for z Systems.

Part two contains chapters about device drivers and features that are used in the context of booting and shutting down Linux.

Part three contains chapters specific to individual storage device drivers.

Part four contains chapters specific to individual network device drivers.

Part five contains chapters about device drivers and features that help to manage the resources of the real or virtual hardware.

Part six contains chapters that describe device drivers and features in support of z/VM virtual server integration.

Part seven contains chapters about device drivers and features that support security aspects of SUSE Linux Enterprise Server 12 SP3 for z Systems.

Part eight contains chapters about assessing the performance of Linux on z Systems.

Part nine contains chapters about device drivers and features that are used in the context of diagnostics and problem solving.

Part ten contains chapters with reference information about commands, kernel parameters, and Linux use of z/VM DIAG calls.

Who should read this document

Most of the information in this document is intended for system administrators who want to configure SUSE Linux Enterprise Server 12 SP3 for z Systems.

The following general assumptions are made about your background knowledge:

- You have an understanding of basic computer architecture, operating systems, and programs.
- You have an understanding of Linux and z Systems terminology.
- You are familiar with Linux device driver software.
- You are familiar with the z Systems devices attached to your system.

Programmers: Some sections are of interest primarily to specialists who want to program extensions to the Linux on z Systems device drivers and features.

Conventions and assumptions used in this publication

This section summarizes the styles, highlighting, and assumptions used throughout this publication.

Authority

Most of the tasks described in this document require a user with root authority. In particular, writing to procfs, and writing to most of the described sysfs attributes requires root authority.

Throughout this document, it is assumed that you have root authority.

Using sysfs and YaST

This document describes how to change settings and options in sysfs. In most cases, changes in sysfs are not persistent. To make your changes persistent, use YaST. If you use a tool other than YaST, ensure that the tool makes persistent changes. See *SUSE Linux Enterprise Server 12 SP3 Deployment Guide* and *SUSE Linux Enterprise Server 12 SP3 Administration Guide* for details.

Terminology

In this publication, the term *booting* is used for running boot loader code that loads the Linux operating system. *IPL* is used for issuing an IPL command to load boot loader code or a stand-alone dump utility. See also “IPL and booting” on page 55.

sysfs and procfs

In this publication, the mount point for the virtual Linux file system sysfs is assumed to be `/sys`. Correspondingly, the mount point for procfs is assumed to be `/proc`.

debugfs

This document assumes that debugfs has been mounted at `/sys/kernel/debug`.

To mount debugfs, you can use this command:

```
# mount none -t debugfs /sys/kernel/debug
```

Number prefixes

In this publication, KB means 1024 bytes, MB means 1,048,576 bytes, and GB means 1,073,741,824 bytes.

Hexadecimal numbers

Mainframe publications and Linux publications tend to use different styles for writing hexadecimal numbers. Thirty-one, for example, would typically read X'1F' in a mainframe publication and 0x1f in a Linux publication.

Because the Linux style is required in many commands and is also used in some code samples, the Linux style is used throughout this publication.

Highlighting

This publication uses the following highlighting styles:

- Paths and URLs are highlighted in `monospace`.
- Variables are highlighted in *<italics within angled brackets>*.
- Commands in text are highlighted in **`monospace bold`**.
- Input and output as normally seen on a computer screen is shown

```
within a screen frame.
Prompts are shown as hash signs:
#
```

Part 1. General concepts

This information at an overview level describes concepts that apply across different device drivers and kernel features.

Newest version

You can find the newest version of this publication on IBM Knowledge Center at www.ibm.com/support/knowledgecenter/linuxonibm/liaaf/lnz_r_suse.html

Chapter 1. How devices are accessed by Linux

Applications on Linux access character and block devices through device nodes, and network devices through network interfaces.

Device names, device nodes, and major/minor numbers

The Linux kernel represents character and block devices as pairs of numbers *<major>*:*<minor>*.

Some major numbers are reserved for particular device drivers. Other device nodes are dynamically assigned to a device driver when Linux boots. For example, major number 94 is always the major number for DASD devices while the device driver for channel-attached tape devices has no fixed major number. A major number can also be shared by multiple device drivers. See `/proc/devices` to find out how major numbers are assigned on a running Linux instance.

The device driver uses the minor number *<minor>* to distinguish individual physical or logical devices. For example, the DASD device driver assigns four minor numbers to each DASD: one to the DASD as a whole and the other three for up to three partitions.

Device drivers assign device names to their devices, according to a device driver-specific naming scheme (see, for example, "DASD naming scheme" on page 119). Each device name is associated with a minor number (see Figure 1).

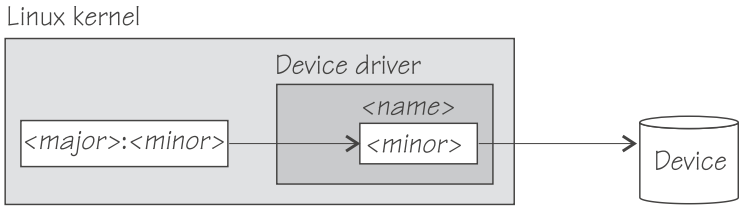

Figure 1. Minor numbers and device names

User space programs access character and block devices through *device nodes* also referred to as *device special files*. When a device node is created, it is associated with a major and minor number (see Figure 2).

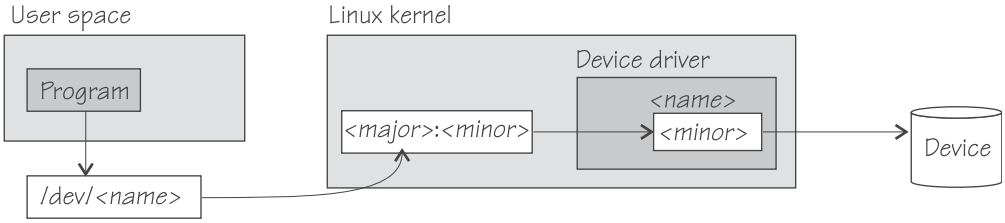

Figure 2. Device nodes

SUSE Linux Enterprise Server 12 SP3 uses udev to create device nodes for you. Standard device nodes match the device name that is used by the kernel, but

different or additional nodes might be created by special udev rules. See *SUSE Linux Enterprise Server 12 SP3 Administration Guide* and the udev man page for more details.

Network interfaces

The Linux kernel representation of a network device is an interface.

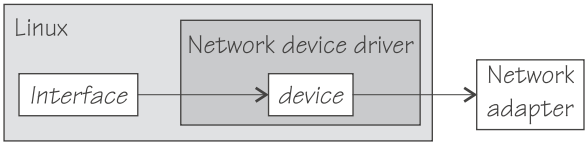

Figure 3. Interfaces

When a network device is defined, it is associated with a real or virtual network adapter (see Figure 3). You can configure the adapter properties for a particular network device through the device representation in sysfs (see "Device directories" on page 9).

You activate or deactivate a connection by addressing the interface with **ifconfig** or an equivalent command. All interfaces that are provided by the z Systems specific network device drivers are interfaces for the Internet Protocol (IP).

Interface names

The interface names are assigned by the Linux network stack.

Interface names are of the form <*base_name*><*n*> where <*base_name*> is a base name that is used for a particular interface type. <*n*> is an index number that identifies an individual interface of a particular type.

Table 1 summarizes the base names that are used for the network device drivers for interfaces that are associated with real hardware.

Table 1. Interface base names for real devices.

This table lists interface type and applicable device driver for the available base names. The last table row contains a comment and spans all cells.

Base name	Interface type	Device driver module	Hardware
eth	Ethernet	qeth, lcs	OSA-Express features
eth	Ethernet	mlx4_en	RoCE Express feature

This table is intended as an overview only. For details about which version of a particular hardware is supported by a device driver, see the applicable section about the device driver.

Table 2 on page 5 summarizes the base names that are used for the network device drivers for interfaces that are associated with virtual hardware:

Table 2. Interface base names for virtual devices.

This table lists interface type and applicable device driver for the available base names.

Base name	Interface type	Device driver module	Comment
hsi	HiperSockets , virtual NIC	qeth	Real HiperSockets or virtual NIC type HiperSockets coupled to a guest LAN
eth	virtual NIC	qeth	QDIO virtual NIC coupled to a guest LAN or virtual switch

When the first device for a particular interface name is set online, it is assigned the index number 0, the second is assigned 1, the third 2, and so on. For example, the first HiperSockets interface is named hsi0, the second hsi1, the third hsi2, and so on.

When a network device is set offline, it retains its interface name. When a device is removed, it surrenders its interface name and the name can be reassigned as network devices are defined in the future. When an interface is defined, the Linux kernel always assigns the interface name with the lowest free index number for the particular type. For example, if the network device with an associated interface name hsi1 is removed while the devices for hsi0 and hsi2 are retained, the next HiperSockets interface to be defined becomes hsi1.

Matching devices with the corresponding interfaces

If you define multiple interfaces on a Linux instance, you must keep track of the interface names assigned to your network devices.

SUSE Linux Enterprise Server 12 SP3 uses udev to track the network interface name and preserves the mapping of interface names to network devices across IPLs.

How you can keep track of the mapping yourself differs depending on the network device driver. For qeth, you can use the **lsqeth** command (see "lsqeth - List qeth-based network devices" on page 603) to obtain a mapping.

After setting a device online, read `/var/log/messages` or issue **dmesg** to find the associated interface name in the messages that are issued in response to the device being set online.

For each network device that is online, there is a symbolic link of the form `/sys/class/net/<interface>/device` where *<interface>* is the interface name. This link points to a sysfs directory that represents the corresponding network device. You can read this symbolic link with **readlink** to confirm that an interface name corresponds to a particular network device.

Main steps for setting up a network interface

The main steps apply to all Linux on z Systems network devices drivers that are based on ccwgroup devices (for example, qeth and lcs devices). How to perform a particular step can be different for the different device drivers.

The main steps are:

1. Create a network device by combining suitable subchannels into a group device. The device driver then creates directories that represent the device in sysfs.
2. Configure the device through its attributes in sysfs. See “Device views in sysfs” on page 11. Some devices have attributes that can or must be set later when the device is online or when the connection is active.
3. Set the device online. This step associates the device with an interface name and thus makes the device known to the Linux network stack. For devices that are associated with a physical network adapter it also initializes the adapter for the network interface.
4. Configure and activate the interface. This step adds interface properties like IP addresses, netmasks, and MTU to the network interface and moves the network interface into state "up". The interface is then ready for user space (socket) programs to run connections and transfer data across it.

To configure a network device, use tools provided with SUSE Linux Enterprise Server 12 SP3. See *SUSE Linux Enterprise Server 12 SP3 Administration Guide*.

Chapter 2. Devices in sysfs

Most of the device drivers create structures in sysfs. These structures hold information about individual devices and are also used to configure and control the devices.

Device categories

There are several Linux on z Systems specific device categories in the `/sys/devices` directory.

Figure 4 illustrates a part of sysfs.

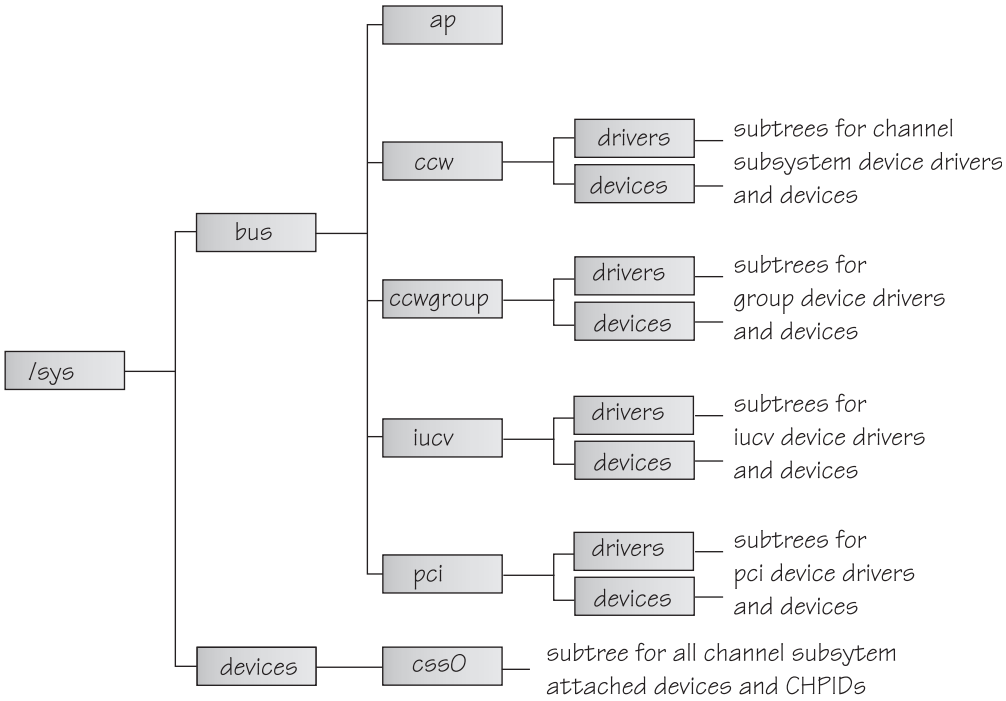

Figure 4. sysfs

`/sys/bus` and `/sys/devices` are common Linux directories. The directories following `/sys/bus` sort the device drivers according to the categories of devices they control. There are several categories of devices. The sysfs branch for a particular category might be missing if there is no device for that category.

AP devices
: are adjunct processors used for cryptographic operations.

CCW devices
: are devices that can be addressed with channel-command words (CCWs). These devices use a single subchannel on the mainframe's channel subsystem.

CCW group devices
are devices that use multiple subchannels on the mainframe's channel subsystem.

IUCV devices
are devices for virtual connections between z/VM guest virtual machines within an IBM mainframe. IUCV devices do not use the channel subsystem.

PCI devices
represent PCIe devices, for example, a 10GbE RoCE Express device. In sysfs, PCIe devices are listed in the `/pci` directory rather than the `/pcie` directory.

Table 3 lists the device drivers that have representation in sysfs:

Table 3. Device drivers with representation in sysfs

Device driver	Category	sysfs directories
3215 console	CCW	`/sys/bus/ccw/drivers/3215`
3270 console	CCW	`/sys/bus/ccw/drivers/3270`
DASD	CCW	`/sys/bus/ccw/drivers/dasd-eckd` `/sys/bus/ccw/drivers/dasd-fba`
SCSI-over-Fibre Channel	CCW	`/sys/bus/ccw/drivers/zfcp`
Storage class memory supporting Flash Express	SCM	`/sys/bus/scm/`
Channel-attached tape	CCW	`/sys/bus/ccw/drivers/tape_34xx` `/sys/bus/ccw/drivers/tape_3590`

Cryptographic	AP	`/sys/bus/ap/drivers/cex5a`
		`/sys/bus/ap/drivers/cex5c`
		`/sys/bus/ap/drivers/cex5p`
		`/sys/bus/ap/drivers/cex4a`
		`/sys/bus/ap/drivers/cex4c`
		`/sys/bus/ap/drivers/cex4p`
		`/sys/bus/ap/drivers/cex3a`
		`/sys/bus/ap/drivers/cex3c`
		`/sys/bus/ap/drivers/pcixcc`

DCSS	n/a	`/sys/devices/dcssblk`
XPRAM	n/a	`/sys/devices/system/xpram`
z/VM recording	IUCV	`/sys/bus/iucv/drivers/vmlogrdr`
qeth (OSA-Express features and HiperSockets)	CCW group	`/sys/bus/ccwgroup/drivers/qeth`
LCS	CCW group	`/sys/bus/ccwgroup/drivers/lcs`
CTCM	CCW group	`/sys/bus/ccwgroup/drivers/ctcm`
NETIUCV	IUCV	`/sys/bus/iucv/drivers/netiucv`
10GbE RoCE Express devices (mlx4_en)	PCI	`sys/bus/pci/drivers/mlx4_core`

Some device drivers do not relate to physical devices that are connected through the channel subsystem. Their representation in sysfs differs from the CCW and CCW group devices, for example, the cryptographic device drivers have their own category, AP.

The following sections provide more details about devices and their representation in sysfs.

Device directories

Each device that is known to Linux is represented by a directory in sysfs.

For CCW and CCW group devices the name of the directory is a *bus ID* that identifies the device within the scope of a Linux instance. For a CCW device, the bus ID is the device's device number with a leading "0.<*n*>.", where <*n*> is the subchannel set ID. For example, 0.1.0ab1.

CCW group devices are associated with multiple device numbers. For CCW group devices, the bus ID is the primary device number with a leading "0.<*n*>.", where <*n*> is the subchannel set ID.

"Device views in sysfs" on page 11 tells you where you can find the device directories with their attributes in sysfs.

Device attributes

The device directories contain attributes. You control a device by writing values to its attributes.

Some attributes are common to all devices in a device category, other attributes are specific to a particular device driver. The following attributes are common to all CCW devices:

online
: You use this attribute to set the device online or offline. To set a device online, write the value `1` to its online attribute. To set a device offline, write the value `0` to its online attribute.

cutype
: specifies the control unit type and model, if applicable. This attribute is read-only.

cmb_enable
: enables I/O data collection for the device. See "Enabling, resetting, and switching off data collection" on page 464 for details.

devtype
: specifies the device type and model, if applicable. This attribute is read-only.

availability
: indicates whether the device can be used. The following values are possible:

  good
  : This is the normal state. The device can be used.

  boxed
  : The device is locked by another operating system instance and cannot be used until the lock is surrendered or the DASD is accessed by force (see "Accessing DASD by force" on page 129).

  no device
  : Applies to disconnected devices only. The device disappears after a machine check and the device driver requests to keep the device online anyway. Changes back to "good" when the device returns after another machine check and the device driver accepts the device back.

no path
Applies to disconnected devices only. After a machine check or a logical vary off, no path remains to the device. However, the device driver keeps the device online. Changes back to "good" when the path returns after another machine check or logical vary on and the device driver accepts the device back.

modalias
contains the module alias for the device. It is of the format:

```
ccw:t<cu_type>m<cu_model>
```

or

```
ccw:t<cu_type>m<cu_model>dt<dev_type>dm<dev_model>
```

Setting attributes

Directly write to attributes or, for CCW devices, use the **chccwdev** command to set attribute values.

Procedure

- You can set a writable attribute by writing the designated value to the corresponding attribute file.
- For CCW devices, you can also use the **chccwdev** command (see "chccwdev - Set CCW device attributes" on page 500) to set attributes.

  With a single **chccwdev** command you can:
  - Set an attribute for multiple devices
  - Set multiple attributes for a device, including setting the device online
  - Set multiple attributes for multiple devices

Working with newly available devices

Errors can occur if you try to work with a device before its sysfs representation is completely initialized.

About this task

When new devices become available to a running Linux instance, some time elapses until the corresponding device directories and their attributes are created in sysfs. Errors can occur if you attempt to work with a device for which the sysfs structures are not present or are not complete. These errors are most likely to occur and most difficult to handle when you are configuring devices with scripts.

Procedure

Use the following steps before you work with a newly available device to avoid such errors:

1. Attach the device, for example, with a z/VM CP ATTACH command.
2. Assure that the sysfs structures for the new device are complete.

   ```
   # echo 1 > /proc/cio_settle
   ```

   This command returns control after all pending updates to sysfs are complete.

Tip: For CCW devices you can omit this step if you then use **chccwdev** (see "chccwdev - Set CCW device attributes" on page 500) to work with the devices. **chccwdev** triggers cio_settle for you and waits for cio_settle to complete.

Results

You can now work with the new device, For example, you can set the device online or set attributes for the device.

Device views in sysfs

sysfs provides multiple views of device specific data.

The most important views are:

- "Device driver view"
- "Device category view" on page 12
- "Device view" on page 12
- "Channel subsystem view" on page 12

Many paths in sysfs contain device bus-IDs to identify devices. Device bus-IDs of subchannel-attached devices are of the form:

```
0.<n>.<devno>
```

where *<n>* is the subchannel set-ID and *<devno>* is the device number.

Device driver view

This view groups devices by the device drivers that control them.

The device driver view is of the form:

```
/sys/bus/<bus>/drivers/<driver>/<device_bus_id>
```

where:

<bus> is the device category, for example, ccw or ccwgroup.

<driver>
is a name that specifies an individual device driver or the device driver component that controls the device (see Table 3 on page 8).

<device_bus_id>
identifies an individual device (see "Device directories" on page 9).

Note: DCSSs and XPRAM are not represented in this view.

Examples

- This example shows the path for an ECKD™ type DASD device:
  `/sys/bus/ccw/drivers/dasd-eckd/0.0.b100`
- This example shows the path for a qeth device:
  `/sys/bus/ccwgroup/drivers/qeth/0.0.a100`
- This example shows the path for a cryptographic device (a CEX4A card):
  `/sys/bus/ap/drivers/cex4a/card3b`

Device category view

This view groups devices by major categories that can span multiple device drivers.

The device category view does not sort the devices according to their device drivers. All devices of the same category are contained in a single directory. The device category view is of the form:
`/sys/bus/<bus>/devices/<device_bus_id>`

where:

<bus> is the device category, for example, ccw or ccwgroup.

<device_bus_id>
identifies an individual device (see "Device directories" on page 9).

Note: DCSSs and XPRAM are not represented in this view.

Examples

- This example shows the path for a CCW device.
  `/sys/bus/ccw/devices/0.0.b100`
- This example shows the path for a CCW group device.
  `/sys/bus/ccwgroup/devices/0.0.a100`
- This example shows the path for a cryptographic device:
  `/sys/bus/ap/devices/card3b`

Device view

This view sorts devices according to their device drivers, but independent from the device category. It also includes logical devices that are not categorized.

The device view is of the form:
`/sys/devices/<driver>/<device>`

where:

<driver>
is a name that specifies an individual device driver or the device driver component that controls the device.

<device>
identifies an individual device. The name of this directory can be a device bus-ID or the name of a DCSS or IUCV device.

Examples

- This example shows the path for a qeth device.
  `/sys/devices/qeth/0.0.a100`
- This example shows the path for a DCSS block device.
  `/sys/devices/dcssblk/mydcss`

Channel subsystem view

The channel subsystem view shows the relationship between subchannels and devices.

The channel subsystem view is of the form:
`/sys/devices/css0/<subchannel>`

where:

<subchannel>
is a subchannel number with a leading "0.<*n*>.", where <*n*> is the subchannel set ID.

I/O subchannels show the devices in relation to their respective subchannel sets and subchannels. An I/O subchannel is of the form:
`/sys/devices/css0/<subchannel>/<device_bus_id>`

where:

<subchannel>
is a subchannel number with a leading "0.<*n*>.", where <*n*> is the subchannel set ID.

<device_bus_id>
is a device number with a leading "0.<*n*>.", where <*n*> is the subchannel set ID (see "Device directories" on page 9).

Examples

- This example shows a CCW device with device number 0xb100 that is associated with a subchannel 0x0001.

  ```
  /sys/devices/css0/0.0.0001/0.0.b100
  ```

- This example shows a CCW device with device number 0xb200 that is associated with a subchannel 0x0001 in subchannel set 1.

  ```
  /sys/devices/css0/0.1.0001/0.1.b200
  ```

- The entries for a group device show as separate subchannels. If a CCW group device uses three subchannels 0x0002, 0x0003, and 0x0004 the subchannel information could be:

  ```
  /sys/devices/css0/0.0.0002/0.0.a100
  /sys/devices/css0/0.0.0003/0.0.a101
  /sys/devices/css0/0.0.0004/0.0.a102
  ```

  Each subchannel is associated with a device number. Only the primary device number is used for the bus ID of the device in the device driver view and the device view.

- This example lists the information available for a non-I/O subchannel with which no device is associated:

  ```
  ls /sys/devices/css0/0.0.ff00/
  bus  driver  modalias  subsystem  type  uevent
  ```

Subchannel attributes

There are sysfs attributes that represent subchannel properties, including common attributes and information specific to the subchannel type.

Subchannels have two common attributes:

`type`
The subchannel type, which is a numerical value, for example:

- 0 for an I/O subchannel
- 1 for a CHSC subchannel
- 3 for an EADM subchannel

modalias
The module alias for the device of the form css:t<*n*>, where <*n*> is the subchannel type (for example, 0 or 1).

These two attributes are the only ones that are always present. Some subchannels, like I/O subchannels, might contain devices and further attributes.

Apart from the bus ID of the attached device, I/O subchannel directories typically contain these attributes:

chpids
is a list of the channel-path identifiers (CHPIDs) through with the device is connected. See also "Channel path ID information" on page 15.

pimpampom
provides the path installed, path available, and path operational masks. See *z/Architecture Principles of Operation*, SA22-7832 for details about the masks.

Channel path measurement

A sysfs attribute controls the channel path measurement facility of the channel subsystem.

```
/sys/devices/css0/cm_enable
```

With the `cm_enable` attribute you can enable and disable the extended channel-path measurement facility. It can take the following values:

0 Deactivates the measurement facility and remove the measurement-related attributes for the channel paths. No action if measurements are not active.

1 Attempts to activate the measurement facility and create the measurement-related attributes for the channel paths. No action if measurements are already active.

If a machine does not support extended channel-path measurements the `cm_enable` attribute is not created.

Two sysfs attributes are added for each channel path object:

cmg Specifies the channel measurement group or unknown if no characteristics are available.

shared
Specifies whether the channel path is shared between LPARs or unknown if no characteristics are available.

If measurements are active, two more sysfs attributes are created for each channel path object:

measurement
A binary sysfs attribute that contains the extended channel-path measurement data for the channel path. It consists of eight 32-bit values and must always be read in its entirety, or 0 will be returned.

measurement_chars
A binary sysfs attribute that is either empty, or contains the channel measurement group dependent characteristics for the channel path, if the channel measurement group is 2 or 3. If not empty, it consists of five 32-bit values.

Examples

- To turn measurements on issue:

```
# echo 1 > /sys/devices/css0/cm_enable
```

- To turn measurements off issue:

```
# echo 0 > /sys/devices/css0/cm_enable
```

Channel path ID information

All CHPIDs that are known to Linux are shown alongside the subchannels in the `/sys/devices/css0` directory.

The directories that represent the CHPIDs have the form:
`/sys/devices/css0/chp0.<chpid>`

where <*chpid*> is a two digit hexadecimal CHPID.

Example: `/sys/devices/css0/chp0.4a`

Setting a CHPID logically online or offline

Directories that represent CHPIDs contain a `status` attribute that you can use to set the CHPID logically online or offline.

About this task

When a CHPID has been set logically offline from a particular Linux instance, the CHPID is, in effect, offline for this Linux instance. A CHPID that is shared by multiple operating system instances can be logically online to some instances and offline to others. A CHPID can also be logically online to Linux while it has been varied off at the SE.

Procedure

To set a CHPID logically online, set its `status` attribute to `online` by writing the value `on` to it. To set a CHPID logically offline, set its `status` attribute to `offline` by writing `off` to it.

Issue a command of this form:

```
# echo <value> > /sys/devices/css0/chp0.<CHPID>/status
```

where:

<CHPID>
is a two digit hexadecimal CHPID.

<value>
is either `on` or `off`.

Examples

- To set a CHPID 0x4a logically offline issue:

```
# echo off > /sys/devices/css0/chp0.4a/status
```

- To read the status attribute to confirm that the CHPID is logically offline issue:

```
# cat /sys/devices/css0/chp0.4a/status
offline
```

- To set the same CHPID logically online issue:

```
# echo on > /sys/devices/css0/chp0.4a/status
```

- To read the status attribute to confirm that the CHPID is logically online issue:

```
# cat /sys/devices/css0/chp0.4a/status
online
```

Configuring a CHPID on LPAR

For Linux in LPAR mode, directories that represent CHPIDs contain a `configure` attribute that you can use to query and change the configuration state of I/O channel-paths.

About this task

The following configuration changes are supported:

- From standby to configured (“configure”)
- From configured to standby (“deconfigure”)

Procedure

To configure a CHPID, set its configure attribute by writing the value `1` to it. To deconfigure a CHPID, set its configure attribute by writing `0` to it.

Issue a command of this form:

```
# echo <value> > /sys/devices/css0/chp0.<CHPID>/configure
```

where:

<CHPID>
is a two digit hexadecimal CHPID.

<value>
is either `1` or `0`.

To query and set the configure value using commands, see “chchp - Change channel path status” on page 502 and “lschp - List channel paths” on page 585.

Examples

- To set a channel path with the ID 0x40 to standby issue:

```
# echo 0 > /sys/devices/css0/chp0.40/configure
```

This operation is equivalent to performing a Configure Channel Path Off operation on the hardware management console.

- To read the configure attribute to confirm that the channel path has been set to standby issue:

```
# cat /sys/devices/css0/chp0.40/configure
0
```

- To set the same CHPID to configured issue:

```
# echo 1 > /sys/devices/css0/chp0.40/configure
```

This operation is equivalent to performing a Configure Channel Path On operation on the hardware management console.

- To read the status attribute to confirm that the CHPID has been set to configured issue:

```
# cat /sys/devices/css0/chp0.40/configure
1
```

Finding the physical channel associated with a CHPID

Use the mapping of physical channel IDs (PCHID) to CHPIDs to find the hardware from the CHPID number or the CHPID numbers from the PCHID.

About this task

A CHPID is associated with either a physical port or with an internal connection defined inside the mainframe, such as HiperSockets. See Figure 5. You can determine the PCHID or internal channel ID number that is associated with a CHPID number.

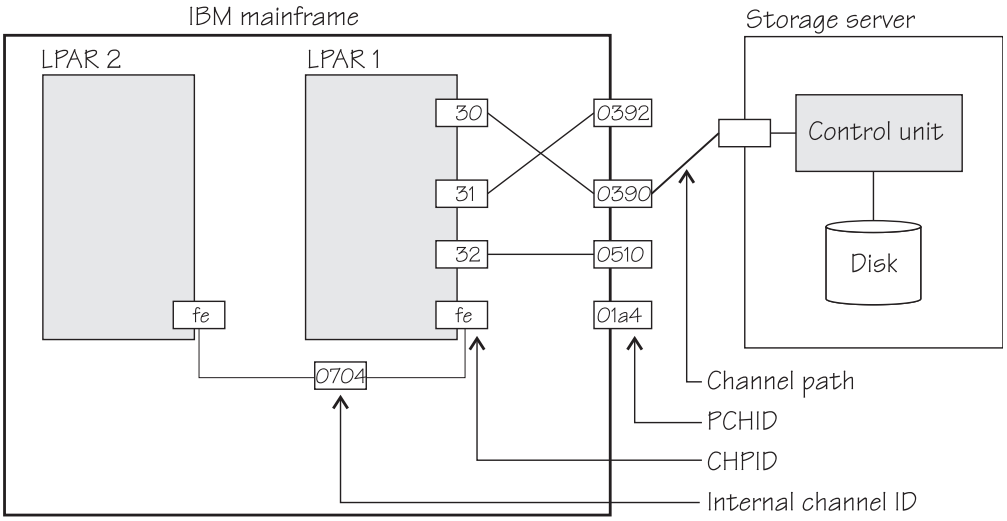

Figure 5. Relationships between CHPIDs, PCHIDs, and internal channel ID numbers.

Knowing the PCHID number can be useful in the following situations:

- When Linux indicates that a CHPID is in an error state, you can use the PCHID number to identify the associated hardware.

- When a hardware interface requires service action, the PCHID mapping can be used to determine which CHPIDs and I/O devices will be affected.

The internal channel ID number can be useful to determine which CHPIDs are connected to the same communication path, such as a HiperSockets link.

Procedure

To find the physical channel ID corresponding to a CHPID, either:

- Display the mapping of all CHPIDs to PCHIDs. Issue the **lschp** command:

```
# lschp
```

- Find the channel-ID related files for the CHPID. These sysfs files are located under `/sys/devices/css0/chp0.<num>`, where <*num*> is the two-digit, lowercase, hexadecimal CHPID number. There are two attribute files:

  chid The channel ID number.

  chid_external
  A flag that indicates whether this CHPID is associated with an internal channel ID (value 0) or a physical channel ID (value 1).

  The sysfs attribute files are created only when channel ID information is available to Linux. For Linux on z/VM, the availability of this information depends on the z/VM version and configuration. For Linux in LPAR mode, this information is always available.

Example

The **lschp** command shows channel ID information in a column labeled PCHID. Internal channel IDs are enclosed in brackets. If no channel ID information is available, the column shows "-".

```
# lschp
CHPID  Vary  Cfg.  Type  Cmg  Shared  PCHID
==========================================
0.30   1     1     1b    2    1       0390
0.31   1     1     1b    2    1       0392
0.32   1     1     1b    2    1       0510
0.33   1     1     1b    2    1       0512
0.34   1     0     1b    -    -       0580
0.fc   1     1     24    3    1      (0702)
0.fd   1     1     24    3    1      (0703)
0.fe   1     1     24    3    1      (0704)
```

In this example, CHPID `30` is associated with PCHID `0390`, and CHPID `fe` is associated with internal channel ID `0704`.

Alternatively, read the `chid` and `chid_external` sysfs attributes, for example for CHPID `30`:

```
# cat /sys/devices/css0/chp0.30/chid
0390
# cat /sys/devices/css0/chp0.30/chid_external
1
```

CCW hotplug events

A hotplug event is generated when a CCW device appears or disappears with a machine check.

The hotplug events provide the following variables:

CU_TYPE
for the control unit type of the device that appeared or disappeared.

CU_MODEL
for the control unit model of the device that appeared or disappeared.

DEV_TYPE
for the type of the device that appeared or disappeared.

DEV_MODEL
for the model of the device that appeared or disappeared.

MODALIAS
for the module alias of the device that appeared or disappeared. The module alias is the same value that is contained in `/sys/devices/css0/<subchannel_id>/<device_bus_id>/modalias` and is of the format`ccw:t<cu_type>m<cu_model>` or `ccw:t<cu_type>m<cu_model>dt<dev_type>dm<dev_model>`

Hotplug events can be used, for example, for:
- Automatically setting devices online as they appear
- Automatically loading driver modules for which devices have appeared

PCI Express support

The Peripheral Component Interconnect Express (PCIe) device driver provides support of RDMA over Converged Ethernet (RoCE).

For more information about RoCE, see Chapter 20, "RDMA over Converged Ethernet," on page 327.

PCIe functions are seen by Linux as devices, hence *devices* is used here synonymously. You can assign PCIe devices to LPARs in the IOCDS.

Linux supports UIDs as persistent identifiers for PCI functions. Provide UIDs for required PCI functions in the hardware configuration (IOCDS). The LPAR needs to be enabled for UID checking. UIDs are unique hexadecimal values in the range 0 - FFFF. For example, with a UID of 0x318, the name of the function would be: `0318:00:00.0`.

Setting up the PCIe support

Configure the PCIe support through the `pci=` kernel parameter.

PCIe devices are automatically configured during the system boot process. In contrast to most z Systems devices, all PCIe devices that are in a configured state are automatically set online. PCIe devices that are in stand-by state are not automatically enabled.

Scanning of PCIe devices is enabled by default. To disable use of PCI devices, set the kernel command line parameter **`pci=off`**.

PCI kernel parameter syntax

```
     ┌pci=on──┐
►►───┤        ├──────────────────────────────────────────────────►◄
     └pci=off─┘
```

where:

off
disables automatic scanning of PCIe devices.

on enables automatic scanning of PCIe devices (default).

Example

The following kernel parameter enables automatic scanning of PCIe devices.

```
pci=on
```

Using PCIe hotplug

Use PCIe hotplug to change the availability of a shared PCIe device.

About this task

Only one LPAR can access a PCIe device. Other LPARs can be candidates for access. Use the HMC or SE to define which LPAR is connected and which LPARs are on the candidate list. A PCIe device that is defined, but not yet used, is shown as a PCIe slot in Linux.

On Linux, you use the `power` sysfs attribute of a PCIe slot to connect the device to the LPAR where Linux runs. While a PCIe device is connected to one LPAR, it is in the reserved state for all other LPARs that are in the candidates list. A reserved PCIe device is invisible to the operating system. The slot is removed from sysfs.

Procedure

The `power` attribute of a slot contains 0 if a PCIe device is in stand-by state, or 1 if the device is configured and usable.

1. Locate the slot for the card you want to work with. To locate the slot, read the `function_id` attribute of the PCIe device from sysfs. For example, to read the `/sys/bus/pci/devices/0000:00:00.0/function_id` issue:

   ```
   # cat /sys/bus/pci/devices/0000:00:00.0/function_id
   0x00000011
   ```

   where `00000011` is the slot. Alternatively, you can use the **`lspci -v`** command to find the slot.
2. Write the value that you want to the `power` attribute:

- Write 1 to `power` to connect the PCIe device to the LPAR in which your Linux instance is running. Linux automatically scans the device, registers it, and brings it online. For example:

  ```
  echo 1 > /sys/bus/pci/slots/00000011/power
  ```

- Write 0 to `power` to stop using the PCIe device. The device state changes to stand-by. The PCIe device is set offline automatically. For example:

  ```
  echo 0 > /sys/bus/pci/slots/00000011/power
  ```

  A PCIe device in standby is also in the standby state to all other LPARs in the candidates list. A standby PCIe device appears as a slot, but without a PCIe device.

Recovering a PCIe device

Use the `recover` sysfs attribute to recover a PCIe device.

About this task

A message is displayed when a PCIe device enters the error state. It is not possible to automatically relieve the PCIe device from this state.

Procedure

1. Find the PCIe device directory in sysfs. PCIe device directories are of the form `/sys/devices/pci<dev>` where *<dev>* is the device ID. For example: `/sys/devices/pci0000:00/0000:00:00.0/`.
2. Write 1 to the `recover` attribute of the PCIe device. For example:

   ```
   # echo 1 > /sys/devices/pci0000:00/0000:00:00.0/recover
   ```

   After a successful recovery, the PCI device is de-registered and reprobed.

Displaying PCIe information

To display information about PCIe devices, read the attributes of the devices in sysfs.

About this task

The sysfs representation of a PCIe device or slot is a directory of the form `/sys/devices/pci<device_bus_id>/<device_bus_id>`, where *<device_bus_id>* is the bus ID of the PCIe device. This sysfs directory contains a number of attributes with information about the PCIe device.

Table 4. Attributes with PCIe device information

Attribute	Explanation
function_handle	Eight-character, hexadecimal PCI-function (device) handle. This attribute is read-only.
function_id	Eight-character, hexadecimal PCI-function (device) ID. The ID identifies the PCIe device within the processor configuration. This attribute is read-only.
pchid	Four-character, hexadecimal, physical channel ID. Specifies the slot of the PCIe adapter in the I/O drawer. Thus identifies the adapter that provides the device. This attribute is read-only.

Table 4. Attributes with PCIe device information (continued)

Attribute	Explanation
pfgid	Two-character, hexadecimal, physical function group ID. This attribute is read-only.
pfip/segment0 /segment1 /segment2 /segment3	Two-character, hexadecimal, PCI-function internal path. Provides an abstract indication of the path that is used to access the PCI function. This can be used to compare the paths used by two or more PCI functions, to give an indication of the degree of isolation between them.
uid	Up to eight-character, hexadecimal, user-defined identifier.
vfn	Four-character, hexadecimal, virtual function number. If an adapter, identified by its PCHID, supports more than one PCI function, the VFN uniquely identifies the instance of that function within the adapter.

Procedure

Issue a command of this form to read an attribute:

```
# cat /sys/devices/pci<device_bus_id>/<device_bus_id>/<attribute>
```

where <*attribute*> is one of the attributes of Table 4 on page 21.

Reading statistics for a PCIe device

Use the `statistics` attribute file to see measurement data for a PCIe device.

About this task

All PCIe devices collect measurement data by default. You can read the data in a sysfs attribute file in the debug file system, by default mounted at `/sys/kernel/debug`.

You can turn data collection on and off. To switch off measurement data collecting for the current session, write "0" to the `statistics` attribute. To enable data collection again, write "1" to the `statistics` attribute.

Example

To read measurement data for a (RoCE) function named 0000:00:00.0 use:

```
# cat /sys/kernel/debug/pci/0000:00:00.0/statistics
```

The statistics attribute file might look similar to this example:

```
FMB @ 0000000078cd8000
Update interval: 4000 ms
Samples: 14373
Last update TOD: cefa44fa50006378
           Load operations:     1002780
          Store operations:     1950622
    Store block operations:     0
        Refresh operations:     0
            Received bytes:     0
          Received packets:     0
         Transmitted bytes:     0
```

```
Transmitted packets:     0
    Allocated pages:     9104
       Mapped pages:     16633
     Unmapped pages:     2337
```

Chapter 3. Kernel and module parameters

Kernel and module parameters are used to configure the kernel and kernel modules.

Individual kernel parameters or module parameters are single keywords, or keyword-value pairs of the form keyword=<*value*> with no blank. Blanks separate consecutive parameters.

Kernel parameters and module parameters are encoded as strings of ASCII characters.

Use *kernel parameters* to configure the base kernel and any optional kernel parts that have been compiled into the kernel image. Use *module parameters* to configure separate kernel modules. Do not confuse kernel and module parameters. Although a module parameter can have the same syntax as a related kernel parameter, kernel and module parameters are specified and processed differently.

Kernel parameters

Use kernel parameters to configure the base kernel and all modules that have been compiled into the kernel.

Where possible, this document describes kernel parameters with the device driver or feature to which they apply. Kernel parameters that apply to the base kernel or cannot be attributed to a particular device driver or feature are described in Chapter 54, "Selected kernel parameters," on page 683. You can also find descriptions for most of the kernel parameters in `Documentation/kernel-parameters.txt` in the Linux source tree.

Specifying kernel parameters

You can use several interfaces to specify kernel parameters.

- Including kernel parameters in a boot configuration
- Adding kernel parameters when booting Linux
- z/VM reader only: Using a kernel parameter file

Avoid parameters that break GRUB 2

This section applies to all interfaces for specifying kernel parameters, except the kernel parameter file that you can use when booting from the z/VM reader.

During the boot process, first the auxiliary kernel and GRUB 2 are started. GRUB 2 then proceeds to start the target SUSE Linux Enterprise Server 12 SP3 kernel (see Figure 13 on page 55).

The auxiliary kernel and the target SUSE Linux Enterprise Server 12 SP3 kernel use the same set of kernel parameters. Be cautious when making changes to the parameters in the boot configuration.

- New or changed parameters might adversely affect the auxiliary kernel.
- Replacing the entire kernel parameter line eliminates parameters that are required by the auxiliary kernel.

Including kernel parameters in a boot configuration

Use GRUB 2 to create or modify boot configurations for SUSE Linux Enterprise Server 12 SP3 for z Systems.

See *SUSE Linux Enterprise Server 12 SP3 Administration Guide* about how to specify kernel parameters with GRUB 2.

Adding kernel parameters when booting Linux

Depending on your platform, boot medium, and boot configuration, you can provide kernel parameters when you start the boot process.

Note:

- Kernel parameters that you add when booting Linux are not persistent. Such parameters enter the default reboot configuration, but are omitted after a regular shutdown. To define a permanent set of kernel parameters for a Linux instance, include these parameters in the boot configuration.
- Kernel parameters that you add when booting might interfere with parameters that SUSE Linux Enterprise Server 12 SP3 sets for you. Read `/proc/cmdline` to find out which parameters were used to start a running Linux instance.

If it is displayed, you can specify kernel parameters on the interactive GRUB 2 menu. See *SUSE Linux Enterprise Server 12 SP3 Administration Guide* for more information.

Specifying kernel parameters before GRUB 2 takes control

Important: The preferred method for specifying kernel parameters when booting is through the GRUB 2 interactive boot menu.

You might be able to use one or more of these interfaces for specifying kernel parameters:

z/VM guest virtual machine with a CCW boot device
When booting Linux in a z/VM guest virtual machine from a CCW boot device, you can use the PARM parameter of the IPL command to specify kernel parameters. CCW boot devices include DASD and the z/VM reader.

For details, see the subsection of "Booting Linux in a z/VM guest virtual machine" on page 58 that applies to your boot device.

z/VM guest virtual machine with a SCSI boot device
When booting Linux in a z/VM guest virtual machine from a SCSI boot device, you can use the SET LOADDEV command with the SCPDATA option to specify kernel parameters. See "Booting from a SCSI device" on page 59 for details.

LPAR mode with a SCSI boot device
When booting Linux in LPAR mode from a SCSI boot device, you can specify kernel parameters in the **Operating system specific load parameters** field on the HMC Load panel. See Figure 17 on page 66.

Kernel parameters as entered from a CMS or CP session are interpreted as lowercase on Linux.

How kernel parameters from different sources are combined

If kernel parameters are specified in a combination of methods, they are concatenated in a specific order.

1. Kernel parameters that have been included in the boot configuration with GRUB 2.
2. Kernel parameters that are specified with the GRUB 2 interactive boot menu.

   The combined parameters that are specified in the boot configuration and through the GRUB 2 interactive boot menu must not exceed 895 characters.
3. Kernel parameters that you specify through the HMC or through z/VM interfaces (see "Adding kernel parameters when booting Linux" on page 26).

   For DASD boot devices you can specify up to 64 characters (z/VM only); for SCSI boot devices you can specify up to 3452 characters.

In total, the combined kernel parameter string that is passed to the Linux kernel for booting can be up to 4096 characters.

Multiple specifications for the same parameter

For some kernel parameters, multiple instances in the kernel parameter string are treated cumulatively. For example, multiple specifications for `cio_ignore=` are all processed and combined.

Conflicting kernel parameters

If the kernel parameter string contains kernel parameters with mutually exclusive settings, the last specification in the string overrides preceding ones. Thus, you can specify a kernel parameter when booting to override an unwanted setting in the boot configuration.

Examples:

- If the kernel parameters in your boot configuration include `possible_cpus=8` but you specify `possible_cpus=2` when booting, Linux uses `possible_cpus=2`.
- If the kernel parameters in your boot configuration include `resume=/dev/dasda2` to specify a disk from which to resume the Linux instance when it has been suspended, you can circumvent the resume process by specifying `noresume` when booting.

Parameters other than kernel parameters

Parameters on the kernel parameter string that the kernel does not recognize as kernel parameters are ignored by the kernel and made available to user space programs. How multiple specifications and conflicts are resolved for such parameters depends on the program that evaluates them.

Using a kernel parameter file with the z/VM reader.

You can use a kernel parameter file for booting Linux from the z/VM reader.

See "Booting from the z/VM reader" on page 61 about using a kernel parameter file in the z/VM reader.

Examples for kernel parameters

Typical parameters that are used for booting SUSE Linux Enterprise Server 12 SP3 configure the console, kdump, and the suspend and resume function.

`conmode=<mode>, condev=<cuu>, console=<name>`
: to set up the Linux console. See "Console kernel parameter syntax" on page 40 for details.

crashkernel=<*area*>
reserves a memory area for a kdump kernel and its initial RAM disk (initrd).

resume=<*partition*>, noresume, no_console_suspend
to configure suspend-and-resume support (see Chapter 6, "Suspending and resuming Linux," on page 77).

See Chapter 54, "Selected kernel parameters," on page 683 for more examples of kernel parameters.

Displaying the current kernel parameter line

Read `/proc/cmdline` to find out with which kernel parameters a running Linux instance was booted.

About this task

Apart from kernel parameters, which are evaluated by the Linux kernel, the kernel parameter line can contain parameters that are evaluated by user space programs, for example, modprobe.

See also "Displaying current IPL parameters" on page 70 about displaying the parameters that were used to IPL and boot the running Linux instance.

Example:

```
# cat /proc/cmdline
root=UUID=93722c3c-85ed-4537-ac68-8528a5bdef0c hvc_iucv=8 TERM=dumb OsaMedium=eth crashkernel=204M-:102M
```

Kernel parameters for rebooting

When rebooting, you can use the current kernel parameters or an alternative set of kernel parameters.

By default, Linux uses the current kernel parameters for rebooting. See "Rebooting from an alternative source" on page 72 about setting up Linux to use different kernel parameters for re-IPL and the associated reboot.

Module parameters

Use module parameters to configure kernel modules that are compiled as separate modules that can be loaded by the kernel.

Separate kernel modules must be loaded before they can be used. Many modules are loaded automatically by SUSE Linux Enterprise Server 12 SP3 when they are needed and you use YaST to specify the module parameters.

To keep the module parameters in the context of the device driver or feature module to which they apply, this information describes module parameters as part of the syntax you would use to load the module with modprobe.

To find the separate kernel modules for SUSE Linux Enterprise Server 12 SP3, list the contents of the subdirectories of `/lib/modules/<kernel-release>` in the Linux file system. In the path, `<kernel-release>` denotes the kernel level. You can query the value for `<kernel-release>` with **uname -r**.

Specifying module parameters

How to specify module parameters depends on how the module is loaded, for example, with YaST or from the command line.

YaST is the preferred tool for specifying module parameters for SUSE Linux Enterprise Server 12 SP3. You can use alternative means to specify module parameters, for example, if a particular setting is not supported by YaST. Avoid specifying the same parameter through multiple means.

Specifying module parameters with modprobe

If you load a module explicitly with a **modprobe** command, you can specify the module parameters as command arguments.

Module parameters that are specified as arguments to **modprobe** are effective only until the module is unloaded.

Note: Parameters that you specify as command arguments might interfere with parameters that SUSE Linux Enterprise Server 12 SP3 sets for you.

Module parameters on the kernel parameter line

Parameters that the kernel does not recognize as kernel parameters are ignored by the kernel and made available to user space programs.

One of these programs is modprobe, which SUSE Linux Enterprise Server 12 SP3 uses to load modules for you. modprobe interprets module parameters that are specified on the kernel parameter line if they are qualified with a leading module prefix and a dot.

For example, you can include a specification with `cmm.sender=TESTID` on the kernel parameter line. modprobe evaluates this specification as the `sender=` module parameter when it loads the cmm module.

Including module parameters in a boot configuration

Module parameters for modules that are required early during the boot process must be included in the boot configuration.

About this task

SUSE Linux Enterprise Server 12 SP3 uses an initial RAM disk when booting.

Procedure

Perform these steps to provide module parameters for modules that are included in the initial RAM disk:

1. Make your configuration changes with YaST or an alternative method.
2. If YaST does not perform this task for you, run **dracut -f** to create an initial RAM disk that includes the module parameters.

Displaying information about module parameters

Loaded modules can export module parameter settings to sysfs.

The parameters for modules are available as sysfs attributes of the form:

`/sys/module/<module_name>/parameters/<parameter_name>`

Before you begin

You can display information about modules that fulfill these prerequisites:

- The module must be loaded.
- The module must export the parameters to sysfs.

Procedure

To find and display the parameters for a module, follow these steps:

1. Optional: Confirm that the module of interest is loaded by issuing a command of this form:

   ```
   # lsmod | grep <module_name>
   ```

   where <*module_name*> is the name of the module.
2. Optional: Get an overview of the parameters for the module by issuing a command of this form:

   ```
   # modinfo <module_name>
   ```

3. To check if a module exports settings to sysfs, try listing the module parameters. Issue a command of the form:

   ```
   # ls /sys/module/<module_name>/parameters
   ```

4. If the previous command listed parameters, you can display the value for the parameter you are interested in. Issue a command of the form:

   ```
   # cat /sys/module/<module_name>/parameters/<parameter_name>
   ```

Example

- To list the module parameters for the ap module, issue:

  ```
  # ls /sys/module/ap/parameters
   domain
   ...
  ```

- To display the value of the domain parameter, issue:

  ```
  # cat /sys/module/ap/parameters/domain
  1
  ```

Part 2. Booting and shutdown

These device drivers and features are useful for booting and shutting down SUSE Linux Enterprise Server 12 SP3.

Newest version

You can find the newest version of this publication on IBM Knowledge Center at www.ibm.com/support/knowledgecenter/linuxonibm/liaaf/lnz_r_suse.html

Restrictions

For prerequisites and restrictions see the z Systems architecture specific information in the SUSE Linux Enterprise Server 12 SP3 release notes at www.suse.com/releasenotes

Chapter 4. Console device drivers

The Linux on z Systems console device drivers support terminal devices for basic Linux control, for example, for booting Linux, for troubleshooting, and for displaying Linux kernel messages.

The only interface to a Linux instance in an LPAR before the boot process is completed is the Hardware Management Console (HMC), see Figure 6. After the boot process has completed, you typically use a network connection to access Linux through a user login, for example, in an ssh session. The possible connections depend on the configuration of your particular Linux instance.

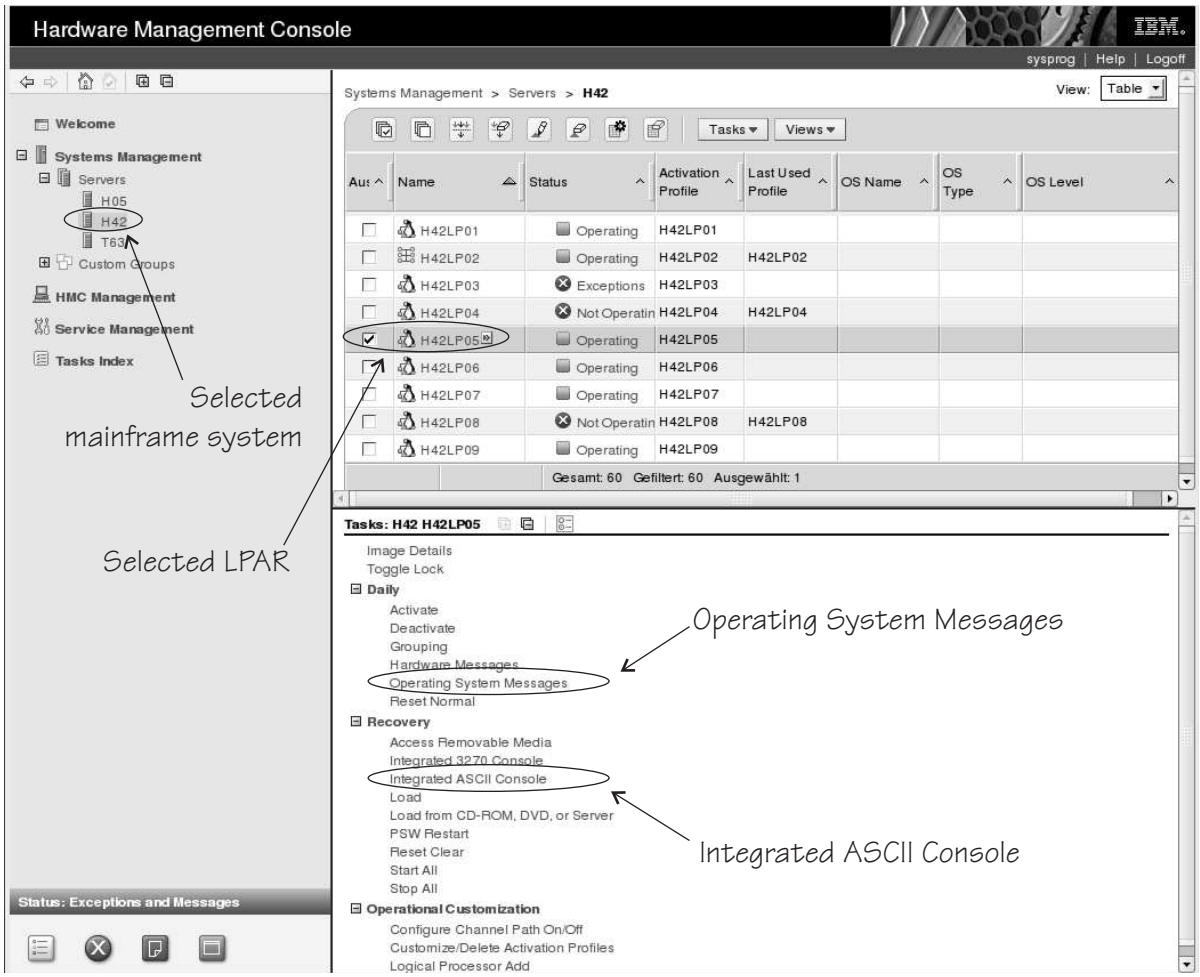

Figure 6. Hardware Management Console

With Linux on z/VM, you typically use a 3270 terminal or terminal emulator to log in to z/VM first. From the 3270 terminal, you IPL the Linux boot device. Again, after boot you typically use a network connection to access Linux through a user login rather than a 3270 terminal.

Console features

The console device drivers support several types of terminal devices.

HMC applets

You can use two applets.

Operating System Messages

This applet provides a line-mode terminal. See Figure 7 for an example.

Integrated ASCII Console

This applet provides a full-screen mode terminal.

These HMC applets are accessed through the service-call logical processor (SCLP) console interface.

3270 terminal

This terminal can be based on physical 3270 terminal hardware or a 3270 terminal emulation.

z/VM can use the 3270 terminal as a 3270 device or perform a protocol translation and use it as a 3215 device. As a 3215 device it is a line-mode terminal for the United States code page (037).

The iucvconn program

You can use the iucvconn program from Linux on z/VM to access terminal devices on other Linux instances that run as guests of the same z/VM system.

See *How to Set up a Terminal Server Environment on z/VM*, SC34-2596 for information about the iucvconn program.

The console device drivers support these terminals as output devices for Linux kernel messages.

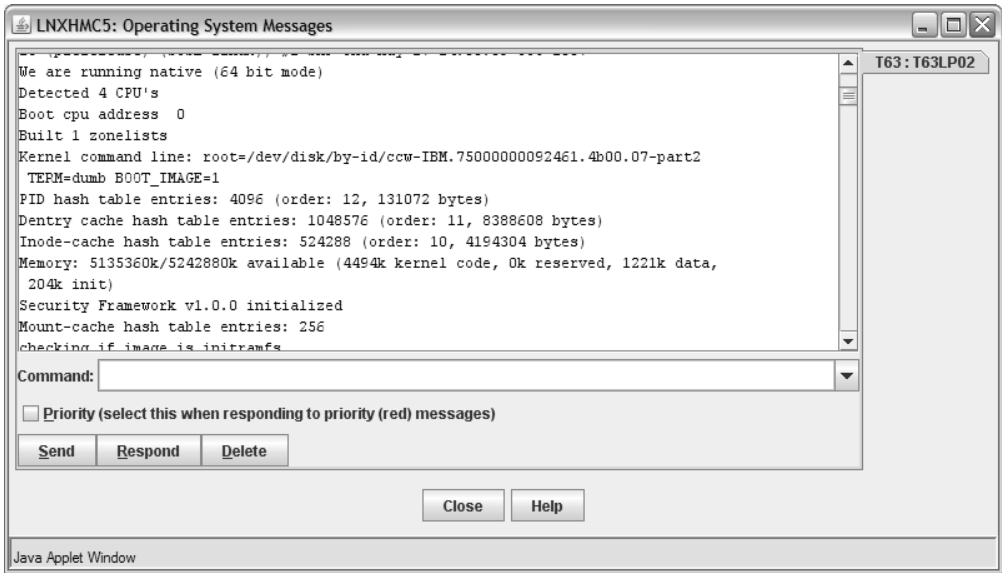

Figure 7. Linux kernel messages on the HMC Operating System Messages applet

What you should know about the console device drivers

The console concepts, naming conventions, and terminology overview help you to understand the tasks you might have to perform with console and terminal devices.

Console terminology

Terminal and *console* have special meanings in Linux.

Linux terminal
An input/output device through which users interact with Linux and Linux applications. Login programs and shells typically run on Linux terminals and provide access to the Linux system.

Linux console
An output-only device to which the Linux kernel can write kernel messages. Linux console devices can be associated with Linux terminal devices. Thus, console output can be displayed on a Linux terminal.

Mainframe terminal
Any device that gives a user access to operating systems and applications that run on a mainframe. A mainframe terminal can be a physical device such as a 3270 terminal hardware that is linked to the mainframe through a controller. It can also be a terminal emulator on a workstation that is connected through a network. For example, you access z/OS® through a mainframe terminal.

Hardware Management Console (HMC)
A device that gives a system programmer control over z Systems hardware resources, for example, LPARs. The HMC is a web application on a web server that is connected to the support element (SE). The HMC can be accessed from the SE but more commonly is accessed from a workstation within a secure network.

On the mainframe, the Linux console and Linux terminals can both be connected to a mainframe terminal.

Before you have a Linux terminal - boot menus

Do not confuse boot menus with a Linux terminal.

Depending on your setup, a zipl boot menu, a GRUB 2 boot menu, or both might be displayed when you perform an IPL.

zipl boot menu
The zipl boot menu is part of the boot loader for the auxiliary kernel that provides GRUB 2 and is displayed before a Linux terminal is set up.

GRUB 2 boot menu
GRUB 2 might display a menu for selecting the target kernel to be booted. For more information about GRUB 2, see *SUSE Linux Enterprise Server 12 SP3 Administration Guide*.

Device and console names

Each terminal device driver can provide a single console device.

Table 5 on page 36 lists the terminal device drivers with the corresponding device names and console names.

Table 5. Device and console names

Device driver	Device name	Console name
SCLP line-mode terminal device driver	sclp_line0	ttyS0
SCLP VT220 terminal device driver	ttysclp0	ttyS1
3215 line-mode terminal device driver	ttyS0	ttyS0
3270 terminal device driver	3270/tty1 to 3270/tty<*N*>	tty3270
z/VM IUCV HVC device driver	hvc0 to hvc7	hvc0

As shown in Table 5, the console with name ttyS0 can be provided either by the SCLP console device driver or by the 3215 line-mode terminal device driver. The system environment and settings determine which device driver provides ttyS0. For details, see the information about the conmode kernel parameter in "Console kernel parameter syntax" on page 40.

Of the terminal devices that are provided by the z/VM IUCV HVC device driver only hvc0 is associated with a console.

Of the 3270/tty<*N*> terminal devices only 3270/tty1 is associated with a console.

Device nodes

Applications, for example, login programs, access terminal devices by device nodes.

For example, with the default `conmode` settings, udev creates the following device nodes:

Table 6. Device nodes created by udev

Device driver	On LPAR	On z/VM
SCLP line-mode terminal device driver	`/dev/sclp_line0`	n/a
SCLP VT220 terminal device driver	`/dev/ttysclp0`	`/dev/ttysclp0`
3215 line-mode terminal device driver	n/a	`/dev/ttyS0`
3270 terminal device driver	`/dev/3270/tty1` to `/dev/3270/tty<N>`	`/dev/3270/tty1` to `/dev/3270/tty<N>`
z/VM IUCV HVC device driver	n/a	`/dev/hvc0` to `/dev/hvc7`

Terminal modes

The Linux terminals that are provided by the console device drivers include line-mode terminals, block-mode terminals, and full-screen mode terminals.

On a full-screen mode terminal, pressing any key immediately results in data being sent to the terminal. Also, terminal output can be positioned anywhere on the screen. This feature facilitates advanced interactive capability for terminal-based applications like the vi editor.

On a line-mode terminal, the user first types a full line, and then presses Enter to indicate that the line is complete. The device driver then issues a read to get the completed line, adds a new line, and hands over the input to the generic TTY routines.

The terminal that is provided by the 3270 terminal device driver is a traditional IBM mainframe block-mode terminal. Block-mode terminals provide full-screen output support and users can type input in predefined fields on the screen. Other than on typical full-screen mode terminals, no input is passed on until the user presses Enter. The terminal that is provided by the 3270 terminal device driver provides limited support for full-screen applications. For example, the ned editor is supported, but not vi.

Table 7 summarizes when to expect which terminal mode.

Table 7. Terminal modes

Accessed through	Environment	Device driver	Mode
Operating System Messages applet on the HMC	LPAR	SCLP line-mode terminal device driver	Line mode
z/VM emulation of the HMC **Operating System Messages** applet	z/VM	SCLP line-mode terminal device driver	Line mode
Integrated ASCII Console applet on the HMC	z/VM or LPAR	SCLP VT220 terminal device driver	Full-screen mode
3270 terminal hardware or emulation	z/VM with CONMODE=3215	3215 line-mode terminal device driver	Line mode
3270 terminal hardware or emulation	z/VM with CONMODE=3270	3270 terminal device driver	Block mode
iucvconn program	z/VM	z/VM IUCV HVC device driver	Full-screen mode

The 3270 terminal device driver provides three different views. See "Switching the views of the 3270 terminal device driver" on page 47 for details.

How console devices are accessed

How you can access console devices depends on your environment.

The diagrams in the following sections omit device drivers that are not relevant for the particular access scenario.

Using the HMC for Linux in an LPAR

You can use two applets on the HMC to access terminal devices on Linux instances that run directly in an LPAR.

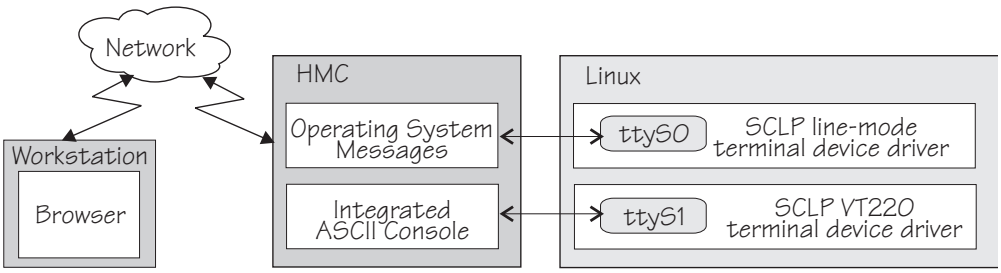

Figure 8. Accessing terminal devices on Linux in an LPAR from the HMC

The **Operating System Messages** applet accesses the device that is provided by the SCLP line-mode terminal device driver. The **Integrated ASCII console** applet accesses the device that is provided by the SCLP VT220 terminal device driver.

Using the HMC for Linux on z/VM

You can use the HMC **Integrated ASCII Console** applet to access terminal devices on Linux instances that run as z/VM guests.

While the ASCII system console is attached to the z/VM guest virtual machine where the Linux instance runs, you can access the ttyS1 terminal device from the HMC **Integrated ASCII Console** applet.

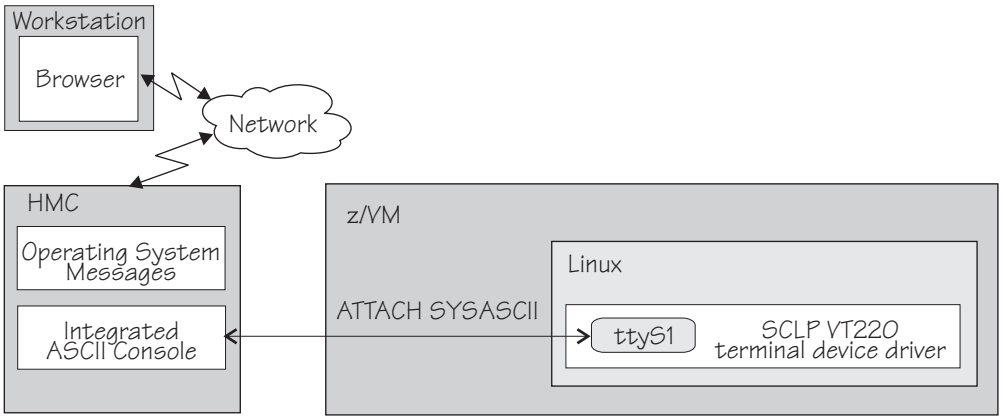

Figure 9. Accessing terminal devices from the HMC for Linux on z/VM

Use the CP ATTACH SYSASCII command to attach the ASCII system console to your z/VM guest virtual machine.

Using a 3270 terminal emulation

For Linux on z/VM, you can use 3270 terminal emulation to access a console device.

Figure 10 illustrates how z/VM can handle the 3270 communication.

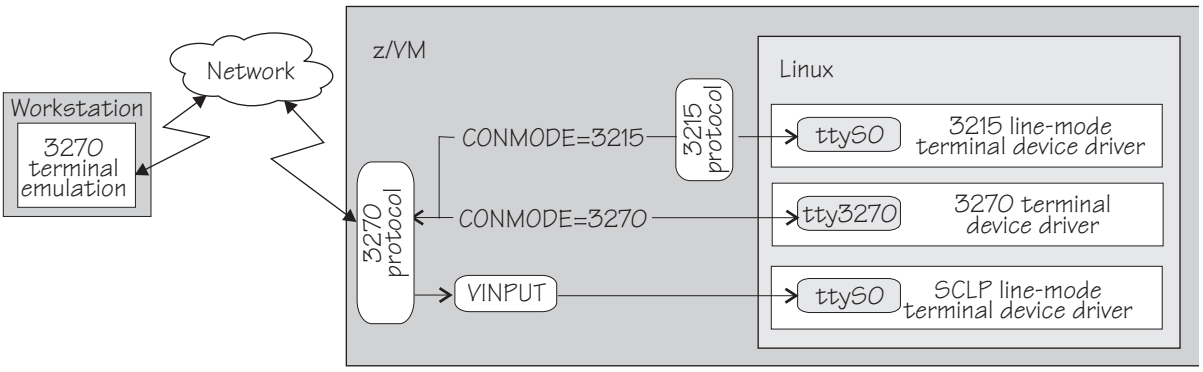

Figure 10. Accessing terminal devices from a 3270 device

Note: Figure 10 shows two console devices with the name ttyS0. Only one of these devices can be present at any one time.

CONMODE=3215
translates between the 3270 protocol and the 3215 protocol and connects the 3270 terminal emulation to the 3215 line-mode terminal device driver in the Linux kernel.

CONMODE=3270
connects the 3270 terminal emulation to the 3270 terminal device driver in the Linux kernel.

VINPUT
is a z/VM CP command that directs input to the ttyS0 device provided by the SCLP line-mode terminal device driver. In a default z/VM environment, ttyS0 is provided by the 3215 line-mode terminal device driver. You can use the conmode kernel parameter to make the SCLP line-mode terminal device driver provide ttyS0 (see "Console kernel parameter syntax" on page 40).

The terminal device drivers continue to support 3270 terminal hardware, which, if available at your installation, can be used instead of a 3270 terminal emulation.

Using iucvconn on Linux on z/VM

On Linux on z/VM, you can access the terminal devices that are provided by the z/VM IUCV Hypervisor Console (HVC) device driver.

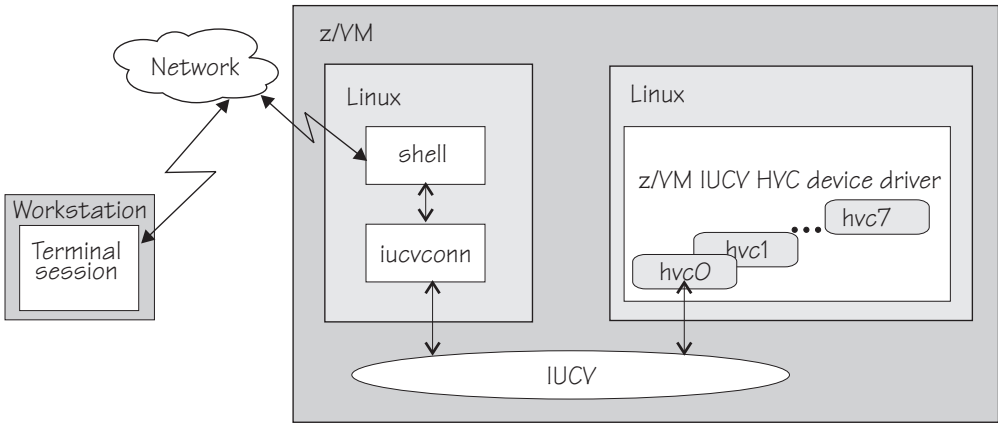

Figure 11. Accessing terminal devices from a peer Linux instance

As illustrated in Figure 11, you access the devices with the iucvconn program from another Linux instance. Both Linux instances are guests of the same z/VM system. IUCV provides the communication between the two Linux instances. With this setup, you can access terminal devices on Linux instances with no external network connection.

Note: Of the terminal devices that are provided by the z/VM IUCV HVC device driver only hvc0 can be activated to receive Linux kernel messages.

Setting up the console device drivers

You configure the console device drivers through kernel parameters. You also might have to enable user logins on terminals and ensure that the TERM environment variable has a suitable value.

Console kernel parameter syntax

Use the console kernel parameters to configure the console device drivers, line-mode terminals, and HVC terminal devices.

The `sclp_con_pages=` and `sclp_con_drop=` parameters apply only to the SCLP line-mode terminal device driver and to the SCLP VT220 terminal device driver.

The `hvc_iucv=` and `hvc_iucv_allow=` kernel parameters apply only to terminal devices that are provided by the z/VM IUCV HVC device driver.

Console kernel parameter syntax

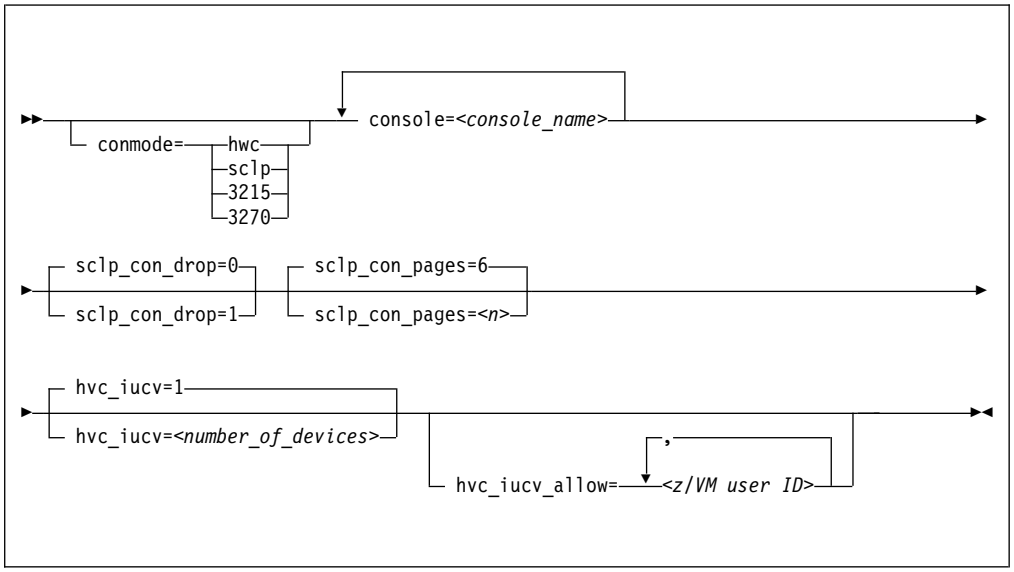

Note: If you specify both the conmode= and the console= parameter, specify them in the sequence that is shown, conmode= first.

where:

`conmode`
specifies which one of the line-mode or block-mode terminal devices is present and provided by which device driver.

A Linux kernel might include multiple console device drivers that can provide a line-mode terminal:

- SCLP line-mode terminal device driver
- 3215 line-mode terminal device driver
- 3270 terminal device driver

On a running Linux instance, only one of these device drivers can provide a device. Table 8 shows how the device driver that is used by default depends on the environment.

Table 8. Default device driver for the line-mode terminal device

Mode	Default
LPAR	SCLP line-mode terminal device driver

Table 8. Default device driver for the line-mode terminal device (continued)

Mode	Default
z/VM	3215 line-mode terminal device driver or 3270 terminal device driver, depending on the z/VM guest's console settings (the `CONMODE` field in the output of `#CP QUERY TERMINAL`). If the device driver you specify with the conmode= kernel parameter contradicts the CONMODE z/VM setting, z/VM is reconfigured to match the specification for the kernel parameter.

You can use the conmode parameter to override the default.

sclp or hwc
specifies the SCLP line-mode terminal device driver.

You need this specification if you want to use the z/VM CP VINPUT command ("Using a z/VM emulation of the HMC Operating System Messages applet" on page 51).

3270
specifies the 3270 device driver.

3215
specifies the 3215 device driver.

console=<*console_name*>
specifies the console devices to be activated to receive Linux kernel messages. If present, ttyS0 is always activated to receive Linux kernel messages and, by default, it is also the *preferred* console.

The preferred console is used as an initial terminal device, beginning at the stage of the boot process when the initialization procedures run. Messages that are issued by programs that are run at this stage are therefore only displayed on the preferred console. Multiple terminal devices can be activated to receive Linux kernel messages but only one of the activated terminal devices can be the preferred console.

If you specify `conmode=3270`, there is no console with name `ttyS0`.

If you want console devices other than ttyS0 to be activated to receive Linux kernel messages, specify a console statement for each of these other devices. The last console statement designates the preferred console.

If you specify one or more console parameters and you want to keep ttyS0 as the preferred console, add a console parameter for ttyS0 as the last console parameter. Otherwise, you do not need a console parameter for ttyS0.

<*console_name*> is the console name that is associated with the terminal device to be activated to receive Linux kernel messages. Of the terminal devices that are provided by the z/VM IUCV HVC device driver only hvc0 can be activated. Specify the console names as shown in Table 5 on page 36.

sclp_con_drop
governs the behavior of the SCLP line-mode and VT220 terminal device driver if either of them runs out of output buffer pages. The trade-off is between slowing down Linux and losing console output. Possible values are `0` (default) and 1.

0 assures complete console output by pausing until used output buffer pages are written to an output device and can be reused without loss.

1 avoids system pauses by overwriting used output buffer pages, even if the content was never written to an output device.

You can use the `sclp_con_pages=` parameter to set the number of output buffers.

sclp_con_pages=<*n*>
specifies the number of 4-KB memory pages to be used as the output buffer for the SCLP line-mode and VT220 terminals. Depending on the line length, each output buffer can hold multiple lines. Use many buffer pages for a kernel with frequent phases of producing console output faster than it can be written to the output device.

Depending on the setting for the `sclp_con_drop=`, running out of pages can slow down Linux or cause it to lose console output.

The value is a positive integer. The default is 6.

hvc_iucv=<*number_of_devices*>
specifies the number of terminal devices that are provided by the z/VM IUCV HVC device driver. <*number_of_devices*> is an integer in the range 0 - 8. Specify 0 to switch off the z/VM IUCV HVC device driver.

hvc_iucv_allow=<*z/VM user ID*>,<*z/VM user ID*>, ...
specifies an initial list of z/VM guest virtual machines that are allowed to connect to HVC terminal devices. If this parameter is omitted, any z/VM guest virtual machine that is authorized to establish the required IUCV connection is also allowed to connect. On the running system, you can change this list with the **chiucvallow** command. See *How to Set up a Terminal Server Environment on z/VM*, SC34-2596 for more information.

Examples

- To activate `ttyS1` in addition to `ttyS0`, and to use `ttyS1` as the preferred console, add the following specification to the kernel command line:

  ```
  console=ttyS1
  ```

- To activate `ttyS1` in addition to `ttyS0`, and to keep `ttyS0` as the preferred console, add the following specification to the kernel command line:

  ```
  console=ttyS1 console=ttyS0
  ```

- To use an emulated HMC Operating System Messages applet in a z/VM environment specify:

  ```
  conmode=sclp
  ```

- To activate `hvc0` in addition to `ttyS0`, use `hvc0` as the preferred console, configure the z/VM IUCV HVC device driver to provide four devices, and limit the z/VM guest virtual machines that can connect to HVC terminal devices to `lxtserv1` and `lxtserv2`, add the following specification to the kernel command line:

  ```
  console=hvc0 hvc_iucv=4 hvc_iucv_allow=lxtserv1,lxtserv2
  ```

- The following specification selects the SCLP line-mode terminal and configures 32 4-KB pages (128 KB) for the output buffer. If buffer pages run out, the SCLP line-mode terminal device driver does not wait for pages to be written to an output device. Instead of pausing, it reuses output buffer pages at the expense of losing content.

  ```
  console=sclp sclp_con_pages=32 sclp_con_drop=1
  ```

Setting up a z/VM guest virtual machine for iucvconn

Because the iucvconn program uses z/VM IUCV to access Linux, you must set up your z/VM guest virtual machine for IUCV.

See "Setting up your z/VM guest virtual machine for IUCV" on page 324 for details about setting up the z/VM guest virtual machine.

For information about accessing Linux through the iucvtty program rather than through the z/VM IUCV HVC device driver, see *How to Set up a Terminal Server Environment on z/VM*, SC34-2596 or the man pages for the **iucvtty** and **iucvconn** commands.

Setting up a line-mode terminal

The line-mode terminals are primarily intended for booting Linux.

The preferred user access to a running SUSE Linux Enterprise Server 12 SP3 instance is through a user login that runs, for example, in an ssh session. See "Terminal modes" on page 36 for information about the available line-mode terminals.

Tip: If the terminal does not provide the expected output, ensure that `dumb` is assigned to the `TERM` environment variable. For example, enter the following command on the bash shell:

```
# export TERM=dumb
```

Setting up a full-screen mode terminal

The full-screen terminal can be used for full-screen text editors, such as `vi`, and terminal-based full-screen system administration tools.

See "Terminal modes" on page 36 for information about the available full-screen mode terminals.

Tip: If the terminal does not provide the expected output, ensure that `linux` is assigned to the `TERM` environment variable. For example, enter the following command on the bash shell:

```
# export TERM=linux
```

Setting up a terminal provided by the 3270 terminal device driver

The terminal that is provided by the 3270 terminal device driver is not a line-mode terminal, but it is also not a typical full-screen mode terminal.

The terminal provides limited support for full-screen applications. For example, the ned editor is supported, but not vi.

Tip: If the terminal does not provide the expected output, ensure that `linux` is assigned to the `TERM` environment variable. For example, enter the following command on the bash shell:

```
# export TERM=linux
```

Enabling user logins

Use systemd service units to enable terminals for user access.

About this task

You must explicitly enable user logins for the HVC terminals `hvc1` to `hvc7` and for any dynamically attached virtual or real 3270 terminals. On other terminals that are, typically, available in your environment, including `hvc0` and `3270/tty1`, systemd automatically enables user logins for you.

Enabling user logins for 3270 terminals

Instantiate getty services for terminals to enable users access.

Procedure

Perform these steps to use a getty service for enabling user logins on any dynamically added real or virtual 3270 terminals.

1. Enable the new getty service by issuing a command of this form:

   ```
   # systemctl enable serial-getty@<terminal>.service
   ```

   where <*terminal*> specifies one of the terminals `3270-tty<N>` and <*N*> is an integer greater than 1.

   Note: You specify terminal `3270/tty<N>` as `3270-tty<N>`.

2. Optional: Start the new getty service by issuing a command of this form:

   ```
   # systemctl start serial-getty@<terminal>.service
   ```

Results

At the next system start, systemd automatically starts the getty service for you.

Example

For `3270/tty2`, issue:

```
# systemctl enable serial-getty@3270-tty2.service
# systemctl start serial-getty@3270-tty2.service
```

Preventing respawns for non-operational HVC terminals

If you enable user logins on a HVC terminal that is not available or not operational, systemd keeps respawning the getty program.

About this task

If user logins are enabled on unavailable HVC terminals `hvc1` to `hvc7`, systemd might keep respawning the getty program. To be free to change the conditions that affect the availability of these terminals, use the ttyrun service to enable user logins for them. HVC terminals are operational only in a z/VM environment, and they depend on the `hvc_iucv=` kernel parameter (see "Console kernel parameter syntax" on page 40).

Any other unavailable terminals with enabled user login, including `hvc0`, do not cause problems with systemd.

Procedure

Perform these steps to use a ttyrun service for enabling user logins on a terminal:

1. Enable the ttyrun service by issuing a command of this form:

   ```
   # systemctl enable ttyrun-getty@hvc<n>.service
   ```

   where hvc<*n*> specifies one of the terminals `hvc1` to `hvc7`.
2. Optional: Start the new service by issuing a command of this form:

   ```
   # systemctl start ttyrun-getty@hvc<n>.service
   ```

Results

At the next system start, systemd starts the ttyrun service for hvc<*n*>. The ttyrun service starts a getty only if this terminal is available.

Example

For `hvc1`, issue:

```
# systemctl enable ttyrun-getty@hvc1.service
# systemctl start ttyrun-getty@hvc1.service
```

Setting up the code page for an x3270 emulation on Linux

For accessing z/VM from Linux through the x3270 terminal emulation, you must add a number of settings to the `.Xdefaults` file to get the correct code translation.

Add these settings:

```
! X3270 keymap and charset settings for Linux
x3270.charset: us-intl
x3270.keymap: circumfix
x3270.keymap.circumfix: :<key>asciicircum: Key("^")\n
```

Working with Linux terminals

You might have to work with different types of Linux terminals, and use special functions on these terminals.

Using the terminal applets on the HMC

You should be aware of some aspects of the line-mode and the full-screen mode terminal when working with the corresponding applets on the HMC.

The following statements apply to both the line-mode terminal and the full-screen mode terminal on the HMC:

- On an HMC, you can open each applet only once.
- Within an LPAR, there can be only one active terminal session for each applet, even if multiple HMCs are used.
- A particular Linux instance supports only one active terminal session for each applet.
- Security hint: Always end a terminal session by explicitly logging off (for example, type "exit" and press Enter). Simply closing the applet leaves the session active and the next user to open the applet resumes the existing session without a logon.
- Slow performance of the HMC is often due to a busy console or increased network traffic.

The following statements apply to the full-screen mode terminal only:

- Output that is written by Linux while the terminal window is closed is not displayed. Therefore, a newly opened terminal window is always blank. For most applications, like login or shell prompts, it is sufficient to press Enter to obtain a new prompt.
- The terminal window shows only 24 lines and does not provide a scroll bar. To scroll up, press Shift+PgUp; to scroll down, press Shift+PgDn.

Accessing terminal devices over z/VM IUCV

Use z/VM IUCV to access hypervisor console (HVC) terminal devices, which are provided by the z/VM IUCV HVC device driver.

About this task

For information about accessing terminal devices that are provided by the iucvtty program see *How to Set up a Terminal Server Environment on z/VM*, SC34-2596.

You access HVC terminal devices from a Linux instance where the iucvconn program is installed. The Linux instance with the terminal device to be accessed and the Linux instance with the iucvconn program must both run as guests of the same z/VM system. The two guest virtual machines must be configured such that IUCV communication is permitted between them.

Procedure

Perform these steps to access an HVC terminal device over z/VM IUCV:

1. Open a terminal session on the Linux instance where the iucvconn program is installed.
2. Enter a command of this form:

   ```
   # iucvconn <guest_ID> <terminal_ID>
   ```

   where:

<guest_ID>
specifies the z/VM guest virtual machine on which the Linux instance with the HVC terminal device to be accessed runs.

<terminal_ID>
specifies an identifier for the terminal device to be accessed. HVC terminal device names are of the form hvc*n* where *n* is an integer in the range 0-7. The corresponding terminal IDs are lnxhvc*n*.

Example: To access HVC terminal device hvc0 on a Linux instance that runs on a z/VM guest virtual machine LXGUEST1, enter:

```
# iucvconn LXGUEST1 lnxhvc0
```

For more details and further parameters of the **iucvconn** command, see the **iucvconn** man page or *How to Set up a Terminal Server Environment on z/VM*, SC34-2596.

3. Press Enter to obtain a prompt.

   Output that is written by Linux while the terminal window is closed, is not displayed. Therefore, a newly opened terminal window is always blank. For most applications, like login or shell prompts, it is sufficient to press Enter to obtain a new prompt.

Security hint

Always end terminal sessions by explicitly logging off (for example, type **exit** and press Enter). If logging off results in a new login prompt, press Control and Underscore (Ctrl+_), then press D to close the login window. Simply closing the terminal window for a hvc0 terminal device that was activated for Linux kernel messages leaves the device active. The terminal session can then be reopened without a login.

Switching the views of the 3270 terminal device driver

The 3270 terminal device driver provides three different views.

Use function key 3 (PF3) to switch between the views (see Figure 12).

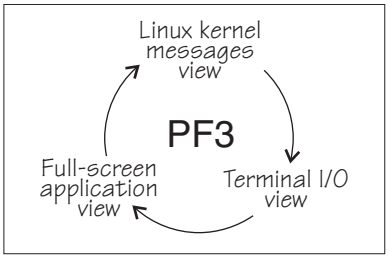

Figure 12. Switching views of the 3270 terminal device driver

The Linux kernel messages view is available only if the terminal device is activated for Linux kernel messages. The full-screen application view is available only if there is an application that uses this view, for example, the ned editor.

Be aware that the 3270 terminal provides only limited full-screen support. The full-screen application view of the 3270 terminal is not intended for applications that require vt220 capabilities. The application itself must create the 3270 data stream.

For the Linux kernel messages view and the terminal I/O view, you can use the PF7 key to scroll backward and the PF8 key to scroll forward. The scroll buffers are fixed at four pages (16 KB) for the Linux kernel messages view and five pages (20 KB) for the terminal I/O view. When the buffer is full and more terminal data needs to be printed, the oldest lines are removed until there is enough room. The number of lines in the history, therefore, vary. Scrolling in the full-screen application view depends on the application.

You cannot issue z/VM CP commands from any of the three views that are provided by the 3270 terminal device driver. If you want to issue CP commands, use the PA1 key to switch to the CP READ mode.

Setting a CCW terminal device online or offline

The 3270 terminal device driver uses CCW devices and provides them as CCW terminal devices.

About this task

This section applies to Linux on z/VM. A CCW terminal device can be:

- The tty3270 terminal device that can be activated for receiving Linux kernel messages.

  If this device exists, it comes online early during the Linux boot process. In a default z/VM environment, the device number for this device is 0009. In sysfs, it is represented as `/sys/bus/ccw/drivers/3270/0.0.0009`. You need not set this device online and you must not set it offline.
- CCW terminal devices through which users can log in to Linux with the CP DIAL command.

  These devices are defined with the CP DEF GRAF command. They are represented in sysfs as `/sys/bus/ccw/drivers/3270/0.<n>.<devno>` where <*n*> is the subchannel set ID and <*devno*> is the virtual device number. By setting these devices online, you enable them for user logins. If you set a device offline, it can no longer be used for user login.

See *z/VM CP Commands and Utilities Reference*, SC24-6175 for more information about the DEF GRAF and DIAL commands.

Procedure

You can use the **chccwdev** command (see "chccwdev - Set CCW device attributes" on page 500) to set a CCW terminal device online or offline. Alternatively, you can write 1 to the device's online attribute to set it online, or `0` to set it offline.

Examples

- To set a CCW terminal device `0.0.7b01` online, issue:

  ```
  # chccwdev -e 0.0.7b01
  ```

  Alternatively issue:

```
# echo 1 > /sys/bus/ccw/drivers/3270/0.0.7b01/online
```

- To set a CCW terminal device `0.0.7b01` offline, issue:

```
# chccwdev -d 0.0.7b01
```

Alternatively issue:

```
# echo 0 > /sys/bus/ccw/drivers/3270/0.0.7b01/online
```

Entering control and special characters on line-mode terminals

Line-mode terminals do not have a control (Ctrl) key. Without a control key, you cannot enter control characters directly.

Also, pressing the Enter key adds a newline character to your input string. Some applications do not tolerate such trailing newline characters.

Table 9 summarizes how to use the caret character (^) to enter some control characters and to enter strings without appended newline characters.

Table 9. Control and special characters on line-mode terminals

For the key combination	Enter	Usage
`Ctrl+C`	`^c`	Cancel the process that is running in the foreground of the terminal.
`Ctrl+D`	`^d`	Generate an end of file (EOF) indication.
`Ctrl+Z`	`^z`	Stop a process.
n/a	`^n`	Suppresses the automatic generation of a new line. Thus, you can enter single characters; for example, the characters that are needed for yes/no answers in some utilities.

Note: For a 3215 line-mode terminal in 3215 mode, you must use United States code page (037).

Using the magic sysrequest feature

You can call the magic sysrequest functions from a line-mode terminal and, depending on your setup, from the hvc0 terminal device.

To call the magic sysrequest functions on a line-mode terminal, enter the 2 characters "^-" (caret and hyphen) followed by a third character that specifies the particular function.

You can also call the magic sysrequest functions from the hvc0 terminal device if it is present and is activated to receive Linux kernel messages. To call the magic sysrequest functions from hvc0, enter the single character Ctrl+o followed by the character for the particular function.

Table 10 on page 50 provides an overview of the commands for the magic sysrequest functions:

Table 10. Magic sysrequest functions

On line-mode terminals, enter	On hvc0, enter	To
^-b	Ctrl+o b	Re-IPL immediately (see "lsreipl - List IPL and re-IPL settings" on page 605).
^-s	Ctrl+o s	Emergency sync all file systems.
^-u	Ctrl+o u	Emergency remount all mounted file systems read-only.
^-t	Ctrl+o t	Show task info.
^-m	Ctrl+o m	Show memory.
^- followed by a digit (0 - 9)	Ctrl+o followed by a digit (0 - 9)	Set the console log level.
^-e	Ctrl+o e	Send the TERM signal to end all tasks except init.
^-i	Ctrl+o i	Send the KILL signal to end all tasks except init.
^-p	Ctrl+o p	See "Obtaining debug information" on page 475.

Note: In Table 10 Ctrl+o means pressing O while holding down the control key.

Table 10 lists the main magic sysrequest functions that are known to work on Linux on z Systems. For a more comprehensive list of functions, see `Documentation/sysrq.txt` in the Linux source tree. Some of the listed functions might not work on your system.

Activating and deactivating the magic sysrequest feature

Use the `sysrq` procfs attribute to activate or deactivate the magic sysrequest feature.

Procedure

Issue the following command to activate the magic sysrequest feature:

```
echo 1 > /proc/sys/kernel/sysrq
```

Enter the following command to deactivate the magic sysrequest feature:

```
echo 0 > /proc/sys/kernel/sysrq
```

Tip: You can use YaST to activate and deactivate the magic sysrequest function. Go to **yast -> system -> Kernel Settings**, select or clear the **enable SYSRQ** option and leave YaST with **OK**.

Triggering magic sysrequest functions from procfs

If you are working from a terminal that does not support a key sequence or combination to call magic sysrequest functions, you can trigger the functions through procfs.

Procedure

Write the character for the particular function to `/proc/sysrq-trigger`.
You can use this interface even if the magic sysrequest feature is not activated as described in "Activating and deactivating the magic sysrequest feature" on page 50.

Example

To set the console log level to 9, enter:

```
# echo 9 > /proc/sysrq-trigger
```

Using a z/VM emulation of the HMC Operating System Messages applet

You can use the **Operating System Messages** applet emulation; for example, if the 3215 terminal is not operational.

About this task

The preferred terminal devices for Linux instances that run as z/VM guests are provided by the 3215 or 3270 terminal device drivers.

The emulation requires a terminal device that is provided by the SCLP line-mode terminal device driver. To use the emulation, you must override the default device driver for z/VM environments (see "Console kernel parameter syntax" on page 40).

For the emulation, you use the z/VM CP VINPUT command instead of the graphical user interface at the service element or HMC. Type any input to the operating system with a leading CP VINPUT.

The examples in the sections that follow show the input line of a 3270 terminal or terminal emulator (for example, x3270). Omit the leading `#CP` if you are in CP read mode. For more information about VINPUT, see *z/VM CP Commands and Utilities Reference*, SC24-6175.

Priority and non-priority commands

`VINPUT` commands require a VMSG (non-priority) or PVMSG (priority) specification.

Operating systems that accept this specification, process priority commands with a higher priority than non-priority commands.

The hardware console driver can accept both if supported by the hardware console within the specific machine or virtual machine.

Linux does not distinguish priority and non-priority commands.

Example

The specifications:

```
#CP VINPUT VMSG LS -L
```

and

```
#CP VINPUT PVMSG LS -L
```

are equivalent.

Case conversion

All lowercase characters are converted by z/VM to uppercase. To compensate for this effect, the console device driver converts all input to lowercase.

For example, if you type `VInput VMSG echo $PATH`, the device driver gets `ECHO $PATH` and converts it into `echo $path`.

Linux and bash are case-sensitive and require some specifications with uppercase characters. To include uppercase characters in a command, use the percent sign (%) as a delimiter. The console device driver interprets characters that are enclosed by percent signs as uppercase.

Examples

In the following examples, the first line shows the user input. The second line shows what the device driver receives after the case conversion by CP. The third line shows the command that is processed by bash:

-
```
#cp vinput vmsg ls -l
CP VINPUT VMSG LS -L
ls -l
...
```

- The following input would result in a bash command that contains a variable $path, which is not defined in lowercase:
```
#cp vinput vmsg echo $PATH
CP VINPUT VMSG ECHO $PATH
echo $path
...
```

  To obtain the correct bash command enclose the uppercase string with the conversion escape character:
```
#cp vinput vmsg echo $%PATH%
CP VINPUT VMSG ECHO $%PATH%
echo $PATH
...
```

Using the escape character

The quotation mark (") is the standard CP escape character. To include the escape character in a command that is passed to Linux, you must type it twice.

For example, the following command passes a string in double quotation marks to be echoed.

```
#cp vinput pvmsg echo ""here is ""$0
CP VINPUT PVMSG ECHO "HERE IS "$0
echo "here is "$0
here is -bash
```

In the example, $0 resolves to the name of the current process.

Using the end-of-line character

To include the end-of-line character in the command that is passed to Linux, you must specify it with a leading escape character.

If you are using the standard settings according to “Using a 3270 terminal in 3215 mode,” you must specify "# to pass # to Linux.

If you specify the end-of-line character without a leading escape character, z/VM CP interprets it as an end-of-line character that ends the **VINPUT** command.

Example

In this example, a number sign is intended to mark the begin of a comment in the bash command. This character is misinterpreted as the beginning of a second command.

```
#cp vinput pvmsg echo ""%N%umber signs start bash comments"" #like this one
CP VINPUT PVMSG ECHO "%N%UMBER SIGNS START BASH COMMENTS"
LIKE THIS ONE
HCPCMD001E Unknown CP command: LIKE
...
```

The escape character prevents the number sign from being interpreted as an end-of-line character.

```
#cp vinput pvmsg echo ""%N%umber signs start bash comments"" "#like this one
VINPUT PVMSG ECHO "%N%UMBER SIGNS START BASH COMMENTS" #LIKE THIS ONE
echo "Number signs start bash comments" #like this one
Number signs start bash comments
```

Simulating the Enter and Spacebar keys

You can use the **CP VINPUT** command to simulate the Enter and Spacebar keys.

Simulate the Enter key by entering a blank followed by `\n`:

```
#CP VINPUT VMSG \n
```

Simulate the Spacebar key by entering two blanks followed by `\n`:

```
#CP VINPUT VMSG  \n
```

Using a 3270 terminal in 3215 mode

The z/VM control program (CP) defines five characters as line-editing symbols. Use the **CP QUERY TERMINAL** command to see the current settings.

The default line-editing symbols depend on your terminal emulator. You can reassign the symbols by changing the settings of `LINEND`, `TABCHAR`, `CHARDEL`, `LINEDEL`, or `ESCAPE` with the **CP TERMINAL** command. Table 11 on page 54 shows the most commonly used settings:

Table 11. Line edit characters

Character	Symbol	Usage
#	LINEND	The end of line character. With this character, you can enter several logical lines at once.
|	TABCHAR	The logical tab character.
@	CHARDEL	The character delete symbol deletes the preceding character.
[or ¢	LINEDEL	The line delete symbol deletes everything back to and including the previous LINEND symbol or the start of the input. "[" is common for ASCII terminals and "¢" for EBCDIC terminals.
"	ESCAPE	The escape character. With this character, you can enter a line-edit symbol as a normal character.

To enter a line-edit symbol, you must precede it with the escape character. In particular, to enter the escape character, you must type it twice.

Examples

The following examples assume the settings of Table 11 with the opening bracket character ([) as the "delete line" character.

- To specify a tab character, specify:
  ```
  "|
  ```
- To specify a double quotation mark character, specify:
  ```
  ""
  ```
- If you type the character string:
  ```
  #CP HALT#CP ZIPL 190[#CP IPL 1@290 PARM vmpoff=""MSG OP REBOOT"#IPL 290""
  ```

  the actual commands that are received by CP are:
  ```
  CP HALT
  CP IPL 290 PARM vmpoff="MSG OP REBOOT#IPL 290"
  ```

Chapter 5. Booting Linux

The options and requirements you have for booting Linux depend on your platform, LPAR or z/VM, and on your boot medium.

The boot loader for SUSE Linux Enterprise Server 12 SP3 is GRUB 2. Use GRUB 2 to prepare DASD and SCSI devices as IPL devices for booting Linux. For details about GRUB 2, see *SUSE Linux Enterprise Server 12 SP3 Administration Guide*.

IPL and booting

On z Systems, you usually start booting Linux by performing an Initial Program Load (IPL).

Figure 13 illustrates the main steps of booting SUSE Linux Enterprise Server 12 SP3.

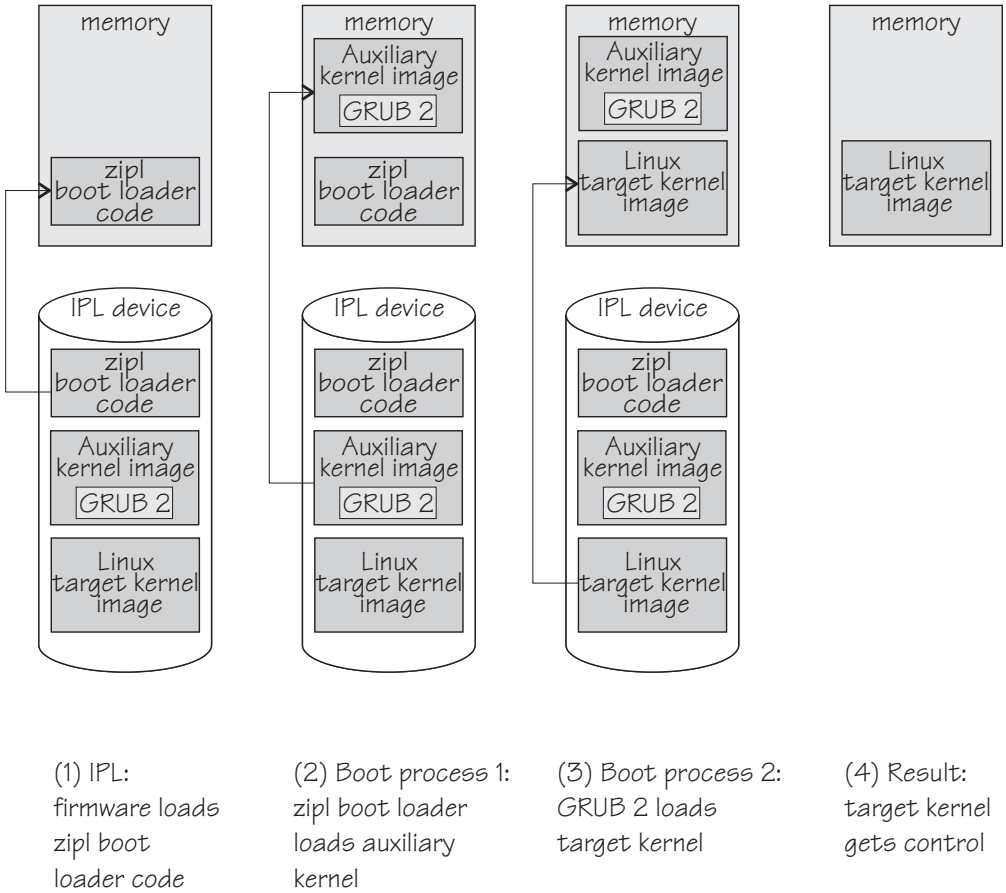

Figure 13. IPL and boot process

First step: IPL

The IPL process is controlled by the z Systems firmware. In this step, zipl boot loader code is loaded into memory.

Second step: boot process for the auxiliary kernel
In this step, the zipl boot loader gets control. It loads a Linux auxiliary kernel into memory. This auxiliary kernel includes GRUB 2. Depending on your configuration and boot device, a zipl boot menu might be displayed during this step.

Third step: boot process for the target kernel
In this step, GRUB 2 gets control. It loads the target Linux kernel into memory.

Fourth step: the target kernel takes over
When the boot process for the target Linux kernel has completed, the target Linux kernel gets control.

If your Linux instance is to run in LPAR mode, you can also use the HMC or the service element (SE) to copy the Linux kernel to the mainframe memory (see "Loading Linux from removable media or from an FTP server" on page 67). Typically, this method applies to an initial installation of a Linux instance.

Apart from starting a boot process, an IPL can also start a dump process. See *Using the Dump Tools on SUSE Linux Enterprise Server 12 SP1*, SC34-2746 for more information about dumps.

You can find the newest version of this publication on IBM Knowledge Center at www.ibm.com/support/knowledgecenter/linuxonibm/liaaf/lnz_r_suse.html

Control point and boot medium

The control point from where you can start the boot process depends on the environment where Linux is to run.

If your Linux instance is to run in LPAR mode, the control point is the mainframe's Support Element (SE) or an attached Hardware Management Console (HMC). For Linux on z/VM, the control point is the control program (CP) of the hosting z/VM.

The media that can be used as boot devices also depend on where Linux is to run. Table 12 provides an overview of the possibilities:

Table 12. Boot media

	DASD	SCSI	z/VM reader	CD-ROM/FTP
z/VM guest	✓	✓	✓	
LPAR	✓	✓		✓

DASDs and SCSI devices that are attached through an FCP channel can be used for both LPAR and z/VM guest virtual machines. A SCSI device can be a disk or an FC-attached CD-ROM or DVD drive. The z/VM reader is available only in a z/VM environment.

For Linux in LPAR mode, you can also boot from a CD-ROM drive on the SE or HMC, or you can obtain the boot data from a remote FTP server.

Typically, booting from removable media applies to initial installation of Linux. Booting from DASD or SCSI disk devices usually applies to previously installed Linux instances.

Boot data

To boot Linux, you generally need a kernel image, boot loader code, kernel parameters, and an initial RAM disk image.

For the z/VM reader, as a sequential I/O boot device, the order in which this data is provided is significant. For random access devices there is no required order.

On SUSE Linux Enterprise Server 12 SP3, kernel images are installed into the `/boot` directory and are named `image-<version>`. For information about where to find the images and how to start an installation, see *SUSE Linux Enterprise Server 12 SP3 Deployment Guide*.

Boot loader code

SUSE Linux Enterprise Server 12 SP3 kernel images are compiled to contain boot loader code for IPL from z/VM reader devices.

If you want to boot a kernel image from a device that does not correspond to the included boot loader code, you can provide alternate boot loader code separate from the kernel image.

Use GRUB 2 to prepare boot devices with separate DASD or SCSI boot loader code. You can then boot from these devices, regardless of the boot loader code in the kernel image.

Kernel parameters

The kernel parameters are in form of an ASCII text string of up to 895 characters. If the boot device is the z/VM reader, the string can also be encoded in EBCDIC.

Individual kernel parameters are single keywords or keyword/value pairs of the form keyword=<*value*> with no blank. Blanks are used to separate consecutive parameters.

You specify kernel parameters when you create your boot configuration with GRUB 2. Depending on your boot method, you can add kernel parameters when starting the boot process.

Important: Do not specify parameters that prevent SUSE Linux Enterprise Server 12 SP3 from booting. See "Avoid parameters that break GRUB 2" on page 25.

Initial RAM disk image

An initial RAM disk holds files, programs, or modules that are not included in the kernel image but are required for booting.

For example, booting from DASD requires the DASD device driver. If you want to boot from DASD but the DASD device driver has not been compiled into your kernel, you need to provide the DASD device driver module on an initial RAM disk.

SUSE Linux Enterprise Server 12 SP3 provides a ramdisk in `/boot` and named `initrd-<kernel version>`.

Rebuilding the initial RAM disk image

Configuration changes might apply to components that are required in the boot process before the root file system is mounted.

For SUSE Linux Enterprise Server 12, such components and their configuration are provided through an initial RAM disk.

Procedure

Perform these steps to make configuration changes for components in the initrd take effect:

1. Issue **dracut -f** to update the initial RAM disk of your target kernel.
2. Issue **grub2-install** to update the initial RAM disk of the auxiliary kernel and to rewrite the zipl boot record.

Booting Linux in a z/VM guest virtual machine

You boot Linux in a z/VM guest virtual machine by issuing CP commands from a CMS or CP session.

For more general information about z/VM guest environments for Linux, see *z/VM Getting Started with Linux on System z®*, SC24-6194.

Booting from a DASD

Boot Linux by issuing the IPL command with a DASD boot device.

Before you begin

You need a DASD boot device that is prepared with GRUB 2.

Procedure

Perform these steps to start the boot process:

1. Establish a CMS or CP session with the z/VM guest virtual machine where you want to boot Linux.
2. Ensure that the boot device is accessible to your z/VM guest virtual machine.
3. Issue a command of this form:

```
#cp i <devno> clear loadparm <n>g<grub_parameters> parm <kernel_parameters>
```

where:

<devno>
specifies the device number of the boot device as seen by the guest.

<n>
selects the kernel to be booted.

0 or 1
immediately starts GRUB 2 for booting the target SUSE Linux Enterprise Server 12 SP3 kernel.

2 boots a rescue kernel.

If you omit this specification, GRUB 2 is started after a timeout period has expired. Depending on your configuration, a zipl boot menu might be displayed during the timeout period. From this menu, you can choose between starting GRUB 2 or booting a rescue kernel.

<grub_parameters>
specifies parameters for GRUB 2. Typically, this specification selects a boot option from a GRUB 2 boot menu. For details, see "Specifying GRUB 2 parameters" on page 70.

<kernel_parameters>
is an optional 64-byte string of kernel parameters to be concatenated to the end of the existing kernel parameters that are used by your boot configuration.

Important: Do not specify parameters that prevent SUSE Linux Enterprise Server 12 SP3 from booting. See "Avoid parameters that break GRUB 2" on page 25.

Example for the zipl menu

This example illustrates how a zipl menu is displayed on the z/VM guest virtual machine console.

```
00: zIPL interactive boot menu
00:
00:  0. default (grub2)
00:
00:  1. grub2
00:  2. skip-grub
00:
00: Note: VM users please use '#cp vi vmsg <number> <kernel-parameters>'
00:
00: Please choose (default will boot in 30 seconds): #cp vi vmsg 1
```

Specify `0` or `1` to immediately start GRUB 2 to proceed with booting the target kernel. Specify `2` to start a rescue kernel. If you do not select a menu item until the timeout expires, GRUB 2 is started.

Example: To start GRUB 2 specify:

```
#cp vi vmsg 1
```

Booting from a SCSI device

Boot Linux by issuing the IPL command with an FCP channel as the IPL device. You must specify the target port and LUN for the boot device in advance by setting the z/VM CP LOADDEV parameter.

Before you begin

You need a SCSI boot device that is prepared with GRUB 2.

Procedure

Perform these steps to start the boot process:

1. Establish a CMS or CP session with the z/VM guest virtual machine where you want to boot Linux.

2. Ensure that the FCP channel that provides access to the SCSI boot disk is accessible to your z/VM guest virtual machine.
3. Specify the target port and LUN of the SCSI boot disk. Enter a command of this form:

```
#cp set loaddev portname <wwpn> lun <lun>
```

where:

<wwpn>
specifies the world wide port name (WWPN) of the target port in hexadecimal format. A blank separates the first eight digits from the final eight digits.

<lun>
specifies the LUN of the SCSI boot disk in hexadecimal format. A blank separating the first eight digits from the final eight digits.

Example: To specify a WWPN 0x5005076300c20b8e and a LUN 0x5241000000000000:

```
#cp set loaddev portname 50050763 00c20b8e lun 52410000 00000000
```

4. Optional for menu configurations: Specify the boot configuration (boot program in z/VM terminology) to be used. Enter a command of this form:

```
#cp set loaddev bootprog <n>
```

where <*n*> selects the kernel to be booted.

0 or 1
immediately starts GRUB 2 for booting the target SUSE Linux Enterprise Server 12 SP3 kernel.

2 boots a rescue kernel.

If you omit this specification, GRUB 2 is started after a timeout period has expired.

Example: To start GRUB 2 and proceed with booting the target kernel, issue this command:

```
#cp set loaddev bootprog 0
```

5. Optional: Add kernel parameters.
Issue a command of this form:

```
#cp set loaddev scpdata <APPEND|NEW> '<kernel_parameters>'
```

where:

<kernel_parameters>
specifies a set of kernel parameters to be stored as system control program data (SCPDATA). When booting Linux, these kernel parameters are concatenated to the end of the existing kernel parameters that are used by your boot configuration.

<kernel_parameters> must contain ASCII characters only. If characters other than ASCII characters are present, the boot process ignores the SCPDATA. *<kernel_parameters>* as entered from a CMS or CP session is interpreted as lowercase on Linux. If you require uppercase characters in the kernel parameters, run the SET LOADDEV command from a REXX script instead. In the REXX script, use the "address command" statement. See *REXX/VM Reference*, SC24-6221 and *REXX/VM User's Guide*, SC24-6222 for details.

Optional: APPEND
appends kernel parameters to existing SCPDATA. This is the default.

Optional: NEW
replaces existing SCPDATA.

Important: Do not specify parameters that prevent SUSE Linux Enterprise Server 12 SP3 from booting. See "Avoid parameters that break GRUB 2" on page 25.

6. Start the IPL and boot process by entering a command of this form:

```
#cp i <devno> loadparm g<grub_parameters>
```

where

<devno>
is the device number of the FCP channel that provides access to the SCSI boot disk.

loadparm g*<grub_parameters>*
optionally specifies parameters for GRUB 2. Typically, this specification selects a boot option from a GRUB 2 boot menu. For details, see "Specifying GRUB 2 parameters" on page 70.

Tip

You can specify the target port and LUN of the SCSI boot disk, a boot configuration, and SCPDATA all with a single SET LOADDEV command. See *z/VM CP Commands and Utilities Reference*, SC24-6175 for more information about the SET LOADDEV command.

Booting from the z/VM reader

Boot Linux by issuing the IPL command with the z/VM reader as the IPL device. You first must transfer the boot data to the reader.

Before you begin

You need the following files, all in record format `fixed 80`:

- Linux kernel image with built-in z/VM reader boot loader code. This is the case for the default SUSE Linux Enterprise Server 12 SP3 kernel.
- Kernel parameters (optional)
- Initial RAM disk image (optional)

About this task

This information is a summary of how to boot Linux from a z/VM reader. For more details, see Redpaper™ *Building Linux Systems under IBM VM*, REDP-0120.

Tip: On the SUSE Linux Enterprise Server 12 SP3 DVD under `/boot/s390x` there is a sample script (SLES12 EXEC) for booting from the z/VM reader.

Procedure

Proceed like this to boot Linux from a z/VM reader:

1. Establish a CMS session with the guest where you want to boot Linux.
2. Transfer the kernel image, kernel parameters, and the initial RAM disk image to your guest. You can obtain the files from a shared minidisk or use:
   - The z/VM sendfile facility.
   - An FTP file transfer in binary mode.

   Files that are sent to your reader contain a file header that you must remove before you can use them for booting. Receive files that you obtain through your z/VM reader to a minidisk.
3. Set up the reader as a boot device.
   a. Ensure that your reader is empty.
   b. Direct the output of the punch device to the reader. Issue:

   ```
   spool pun * rdr
   ```

   c. Use the CMS PUNCH command to transfer each of the required files to the reader. Be sure to use the "no header" option to omit the file headers.
      First transfer the kernel image.
      Second transfer the kernel parameters.
      Third transfer the initial RAM disk image, if present.

      For each file, issue a command of this form:

   ```
   pun <file_name> <file_type> <file_mode> (noh
   ```

   d. Optional: Ensure that the contents of the reader remain fixed.

   ```
   change rdr all keep nohold
   ```

   If you omit this step, all files are deleted from the reader during the IPL that follows.
4. Issue the IPL command:

   ```
   ipl 000c clear parm <kernel_parameters>
   ```

   where:

   0x000c
   is the device number of the reader.

   parm *<kernel_parameters>*
   is an optional 64-byte string of kernel parameters to be concatenated to the end of the existing kernel parameters that are used by your boot configuration.

   See also "Adding kernel parameters when booting Linux" on page 26.

Booting Linux in LPAR mode

You can boot Linux in LPAR mode from a Hardware Management Console (HMC) or Support Element (SE).

About this task

The following description refers to an HMC, but the same steps also apply to an SE.

Booting from DASD

Use the SE or HMC to boot Linux in LPAR from a DASD boot device.

Before you begin

You need a boot device that is prepared with GRUB 2.

Procedure

Perform these steps to boot from a DASD:

1. In the navigation pane of the HMC, expand **Systems Management** and **Servers** and select the mainframe system that you want to work with. A table of LPARs is displayed on the **Images** tab in the content area.
2. Select the LPAR where you want to boot Linux.
3. In the **Tasks** area, expand **Recovery** and click **Load** (see Figure 14).

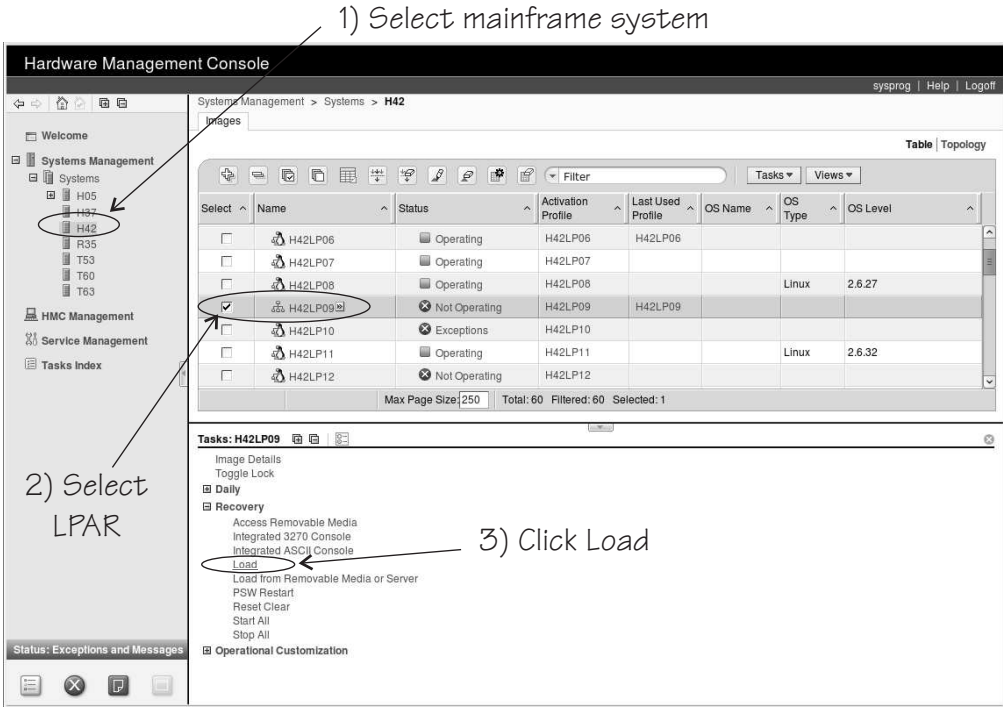

Figure 14. Load task on the HMC

4. Select load type **Normal** (see Figure 15 on page 64).

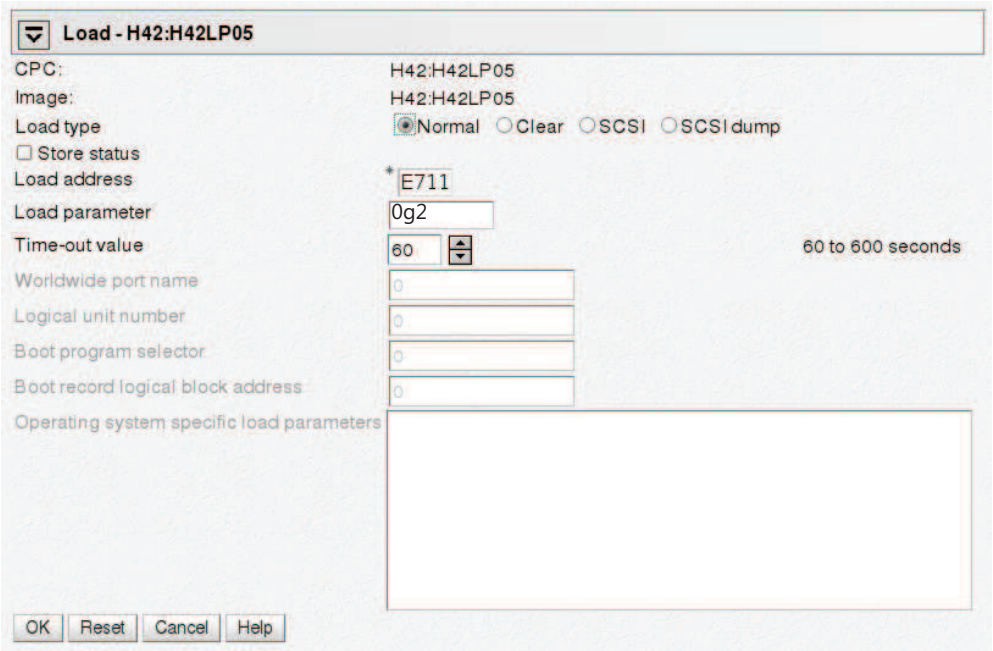

Figure 15. Load panel for booting from DASD

5. Enter the device number of the DASD boot device in the **Load address** field.
6. Enter a specification of the form *<n>***g***<grub_parameters>* in the **Load parameter** filed.

   <n>
   selects the kernel to be booted.

   0 or 1
   immediately starts GRUB 2 for booting the target SUSE Linux Enterprise Server 12 SP3 kernel.

   2 boots a rescue kernel.

   If you omit this specification, GRUB 2 is started after a timeout period has expired. Depending on your configuration, a zipl boot menu might be displayed during the timeout period. From this menu, you can choose between starting GRUB 2 or booting a rescue kernel.

   <grub_parameters>
   specifies parameters for GRUB 2. Typically, this specification selects a boot option from a GRUB 2 boot menu. For details, see "Specifying GRUB 2 parameters" on page 70.
7. Click **OK** to start the boot process.

Example for the zipl menu

This example illustrates how a zipl menu is displayed on the HMC or SE.

```
zIPL interactive boot menu

 0. default (grub2)

 1. grub2
 2. skip-grub

Note: VM users please use '#cp vi vmsg <number> <kernel-parameters>'

Please choose (default will boot in 30 seconds): 1
```

Specify `0` or `1` to immediately start GRUB 2 and proceed with booting the target kernel. Specify `2` to start a rescue kernel. If you do not select a menu item before the timeout expires, GRUB 2 is started.

What to do next

Check the output on the preferred console (see "Console kernel parameter syntax" on page 40) to monitor the boot progress.

Booting from SCSI

Use the SE or HMC to boot Linux in LPAR from a SCSI boot device.

Before you begin

You need a boot device that is prepared with GRUB 2.

Procedure

Perform these steps to boot from a SCSI boot device:

1. In the navigation pane of the HMC, expand **Systems Management** and **Servers** and select the mainframe system that you want to work with. A table of LPARs is displayed on the **Images** tab in the content area.
2. Select the LPAR where you want to boot Linux.
3. In the **Tasks** area, expand **Recovery** and click **Load** (see Figure 16 on page 66).

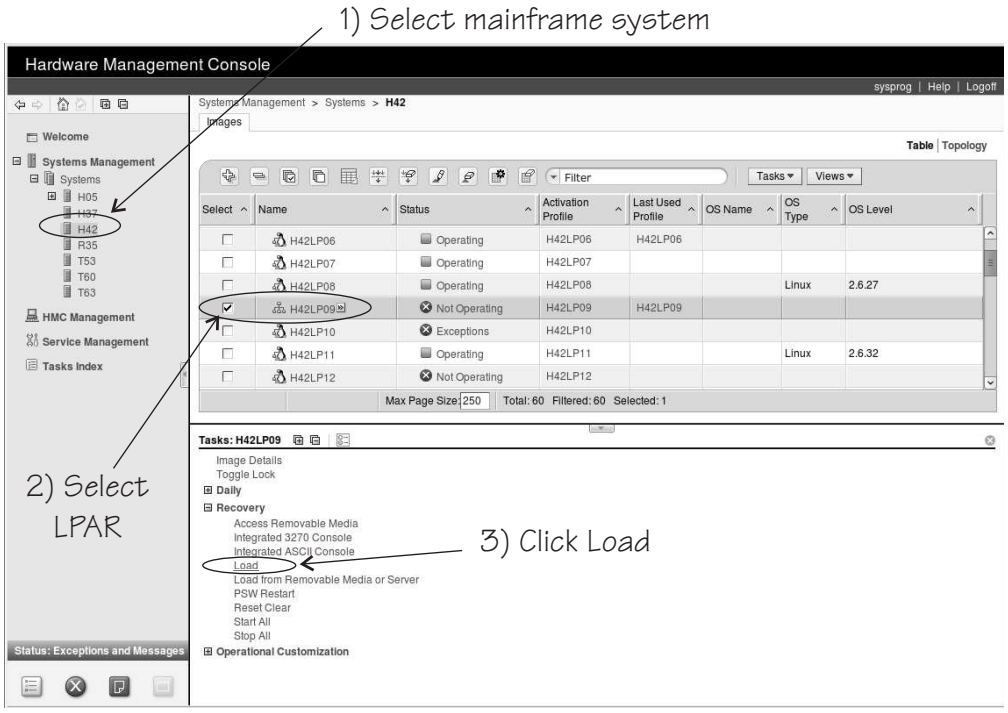

Figure 16. Load task on the HMC

4. Select load type **SCSI** (see Figure 17).

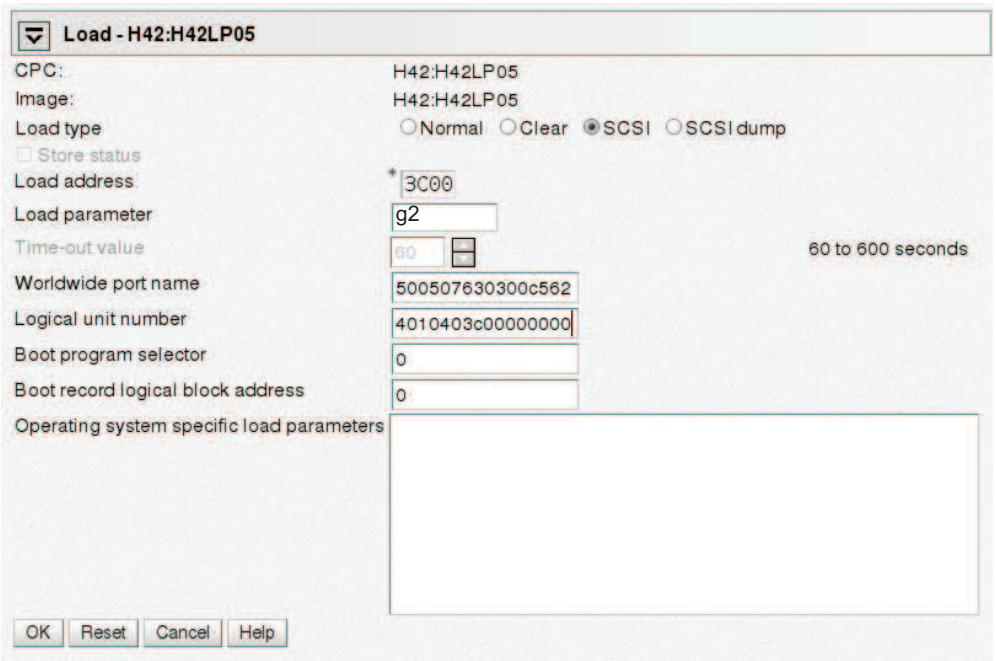

Figure 17. Load panel with SCSI feature enabled - for booting from a SCSI device

5. Enter the device number of the FCP channel through which the SCSI device is accessed in the **Load address** field.
6. Enter the WWPN of the SCSI device in the **World wide port name** field.
7. Enter the LUN of the SCSI device in the **Logical unit number** field.

8. Optional: In the **Boot program selector** field, enter `0`, `1`, or `2`.

   `0 or 1`
   immediately starts GRUB 2 for booting the target SUSE Linux Enterprise Server 12 SP3 kernel.

   `2` boots a rescue kernel.

   If you omit this specification, the target kernel is booted after a timeout period has expired.
9. Optional: In the **Load parameter** field specify **g**<*grub_parameters*> where <*grub_parameters*> are parameters to be evaluated by GRUB 2.

   Typically, this specification selects a boot option from a GRUB 2 boot menu. For details, see "Specifying GRUB 2 parameters" on page 70.
10. Optional: Type kernel parameters in the **Operating system specific load parameters** field. These parameters are concatenated to the end of the existing kernel parameters used by your boot configuration when booting Linux.

    Use ASCII characters only. If you enter characters other than ASCII characters, the boot process ignores the data in the **Operating system specific load parameters** field.

    Important: Do not specify parameters that prevent SUSE Linux Enterprise Server 12 SP3 from booting. See "Avoid parameters that break GRUB 2" on page 25.
11. Accept the defaults for the remaining fields.
12. Click **OK** to start the boot process.

What to do next

Check the output on the preferred console (see "Console kernel parameter syntax" on page 40) to monitor the boot progress.

Loading Linux from removable media or from an FTP server

Instead of a boot loader, you can use SE functions to copy the Linux kernel image to your LPAR memory.

After the Linux kernel is loaded, Linux is started using restart PSW.

Before you begin

You need installation data that includes a special file with installation information (with extension "ins"). This file can be in different locations:

- On a disk that is inserted in the CD-ROM or DVD drive of the system where the HMC runs
- In the file system of an FTP server that you can access through FTP from your HMC system

The `.ins` file contains a mapping of the location of installation data on the disk or FTP server and the memory locations where the data is to be copied.

For SUSE Linux Enterprise Server 12 SP3 this file is called `suse.ins` and located in the root directory of the file system on the DVD 1.

Procedure

Perform these steps:

1. In the navigation pane of the HMC, expand **Systems Management** and **Servers** and select the mainframe system you want to work with. A table of LPARs is displayed on the **Images** tab in the content area.
2. Select the LPAR where you want to boot Linux.
3. In the **Tasks** area, expand **Recovery** and click **Load from Removable Media or Server** (see Figure 18).

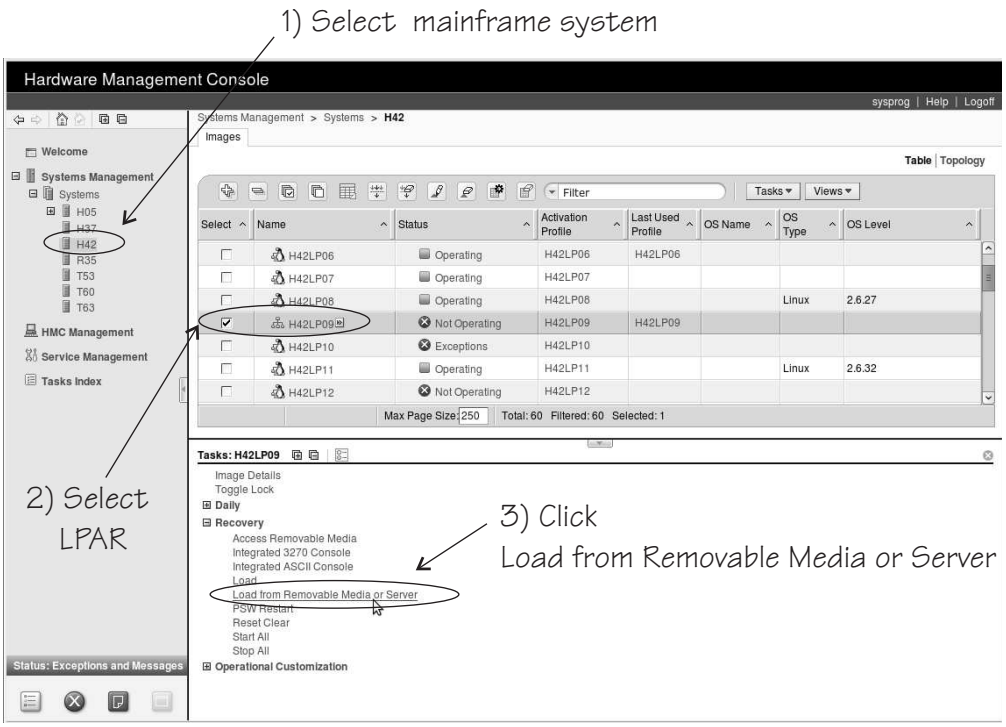

Figure 18. Load from Removable Media or Server on the HMC

4. Specify the source of the code to be loaded.
   - For loading from a CD-ROM drive:
     a. Select **Hardware Management Console CD-ROM/DVD** (see Figure 19 on page 69).

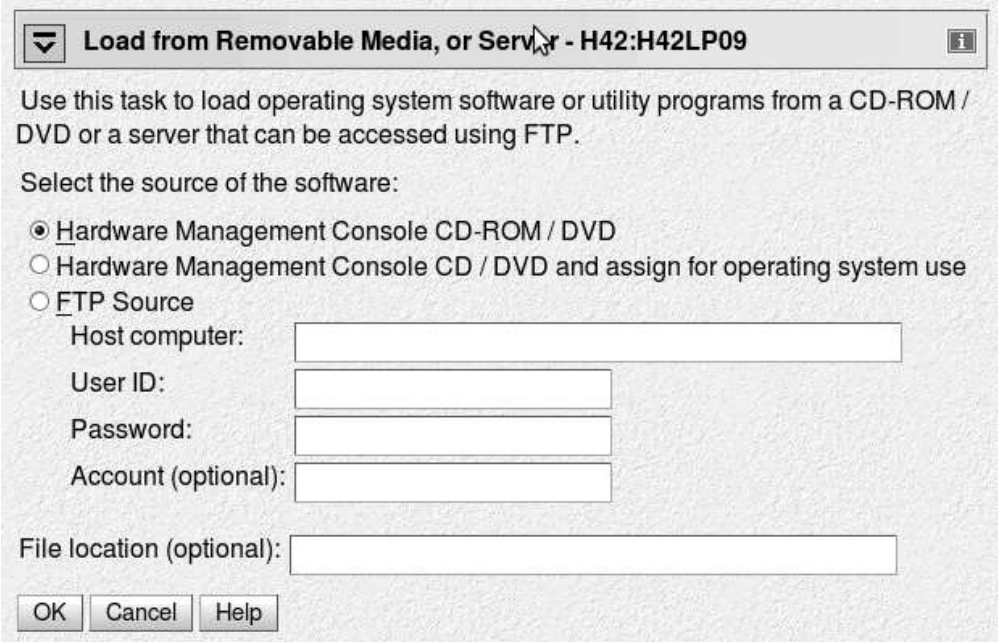

Figure 19. Load from Removable Media or Server panel

   b. Leave the **File location** field blank.

- For an initial installation from removable media at the HMC
   a. Select **Hardware Management Console CD / DVD and assign for operating system use** (see Figure 19).
   b. Enter the path for the directory where the "ins-file" is in the **File location** field. You can leave this field blank if the "ins-file" is in the root directory of the file system on the removable media.

   The installation CD or DVD must hold a distribution that supports an installation from the HMC.
- For loading from an FTP server
   a. Select the **FTP Source** radio button.
   b. Enter the IP address or host name of the FTP server with the installation code resides in the **Host computer** entry field.
   c. Enter your user ID for the FTP server in the **User ID** entry field.
   d. Enter your password for the FTP server in the **Password** entry field.
   e. If required by your FTP server, enter your account information in the **Account** entry field.
   f. Enter the path for the directory where the `suse.ins` resides in the file location entry field. You can leave this field blank if the file is in the FTP server's root directory.

5. Click **Continue** to display the Select Software to Install panel (Figure 20 on page 70).

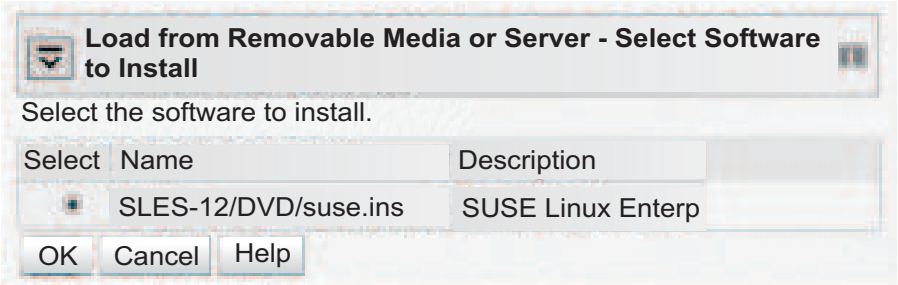

Figure 20. Select Software to Install panel

6. Select `suse.ins`.
7. Click **OK** to start loading Linux.

Results

The kernel has started and the SUSE Linux Enterprise Server 12 SP3 boot process continues.

Specifying GRUB 2 parameters

When you IPL from SCSI or DASD, you can use the loadparm parameter to, for example, select a boot option from a GRUB 2 boot menu.

About this task

For DASD the syntax is `<0|1|2>g<grub_parameters>`, for SCSI it is `g<grub_parameters>`, where `<grub_parameters>` specifies a boot configuration from a GRUB 2 boot menu.

Procedure

1. Optional: To select a GRUB 2 boot option, first use **`grub2-once --enum`** to list the GRUB 2 boot entries, for example:

```
# grub2-once --enum
0 SLES12
1>0 Advanced options for SLES12>SLES12, with Linux 3.12.49-3-default
1>1 Advanced options for SLES12>SLES12, with Linux 3.12.49-3-default (recovery mode)
```

2. To specify a GRUB 2 boot entry, replace the greater than (>) character with the full stop (.) character. For example, specify **`loadparm g1.1`** for the 1>1 boot entry.

Displaying current IPL parameters

To display the IPL parameters, use the **`lsreipl`** command with the `-i` option. Alternatively, a sysfs interface is available.

For more information about the **`lsreipl`** command, see "lsreipl - List IPL and re-IPL settings" on page 605. In sysfs, information about IPL parameters is available in subdirectories of `/sys/firmware/ipl`.

`/sys/firmware/ipl/ipl_type`

The `/sys/firmware/ipl/ipl_type` attribute contains the device type from which the kernel was booted. The following values are possible:

ccw The IPL device is a CCW device, for example, a DASD or the z/VM reader.

fcp The IPL device is an FCP device.

unknown
The IPL device is not known.

Depending on the IPL type, there might be more attributes in `/sys/firmware/ipl/`.

If the device is a CCW device, the additional attributes `device` and `loadparm` are present.

`device` Contains the bus ID of the CCW device that is used for IPL, for example:

```
# cat /sys/firmware/ipl/device
0.0.1234
```

`loadparm`
Contains up to 8 characters for the loadparm that is used for IPL, for example:

```
# cat /sys/firmware/ipl/loadparm
0g2
```

`parm`

Contains additional kernel parameters that are specified with the PARM parameter when booting with the z/VM CP IPL command. See also "Adding kernel parameters when booting Linux" on page 26.

If the device is FCP, a number of additional attributes are present (also see Chapter 10, "SCSI-over-Fibre Channel device driver," on page 153 for details):

`device` Contains the bus ID of the FCP device that is used for IPL, for example:

```
# cat /sys/firmware/ipl/device
0.0.50dc
```

`wwpn` Contains the WWPN used for IPL, for example:

```
# cat /sys/firmware/ipl/wwpn
0x5005076300c20b8e
```

`lun` Contains the LUN used for IPL, for example:

```
# cat /sys/firmware/ipl/lun
0x5010000000000000
```

`br_lba` Contains the logical block address of the boot record on the boot device (usually 0).

`bootprog`
Contains the boot program number. For example:

```
# cat /sys/firmware/ipl/bootprog
0
```

loadparm
Contains up to 8 characters as parameters for GRUB 2. Typically, this specification selects a boot option from a GRUB 2 boot menu. For example:

```
# cat /sys/firmware/ipl/loadparm
g2
```

scp_data
Contains additional kernel parameters, if any, that are used when booting from a SCSI device. For information about how SCPDATA can be set see the following sections:

- "Booting from a SCSI device" on page 59 for z/VM
- "Booting from SCSI" on page 65 for LPAR
- "chreipl - Modify the re-IPL configuration" on page 507

binary_parameter
Contains the information of the preceding attributes in binary format.

Rebooting from an alternative source

When you reboot Linux, the system conventionally boots from the last used location. However, you can configure an alternative device to be used for re-IPL instead of the last used IPL device.

When the system is re-IPLed, the alternative device is used to boot the kernel.

To configure the re-IPL device, use the **chreipl** tool (see "chreipl - Modify the re-IPL configuration" on page 507).

Alternatively, you can use the sysfs attributes in `/sys/firmware/reipl`. To configure, write strings into the attributes. The following re-IPL types can be set with the `/sys/firmware/reipl/reipl_type` attribute:

ccw For ccw devices such as DASDs that are attached through ESCON or FICON®.

fcp For FCP SCSI devices, including SCSI disks and CD or DVD drives (Hardware support is required.)

nss For Named Saved Systems (z/VM only)

For each supported re-IPL type a sysfs directory is created under `/sys/firmware/reipl` that contains the configuration attributes for the device. The directory name is the same as the name of the re-IPL type.

When Linux is booted, the re-IPL attributes are set by default to the values of the boot device, which can be found under `/sys/firmware/ipl`.

Attributes for ccw

You can find the attributes for re-IPL type ccw in the `/sys/firmware/reipl/ccw` sysfs directory.

device Device number of the re-IPL device. For example 0.0.7412 or 0.1.5119.

loadparm
Up to eight characters for the loadparm used to select the boot configuration in the zipl menu (if available).

If the re-IPL target kernel is SUSE Linux Enterprise Server 12 or later, the specification must be of the form <*n*>**g**<*grub_parameters*>, where

<n>
selects the kernel to be booted.

0 or 1
immediately starts GRUB 2 for booting the target kernel.

2 boots a rescue kernel.

If you omit this specification, GRUB 2 is started after a timeout period has expired.

<grub_parameters>
specifies parameters for GRUB 2. Typically, this specification selects a boot option from a GRUB 2 boot menu. For details, see "Specifying GRUB 2 parameters" on page 70.

parm A 64-byte string of kernel parameters that is concatenated to the boot command line. The PARM parameter can be set only for Linux on z/VM. See also "Adding kernel parameters when booting Linux" on page 26.

A leading equal sign (=) means that the existing kernel parameter line in the boot configuration is ignored and the boot process uses the kernel parameters in the `scp_data` attribute only.

Important:

- If the re-IPL kernel is SUSE Linux Enterprise Server 12 or later, be sure not to specify kernel parameters that prevent the target kernel from booting.
- In particular, do not use a leading equal sign if the re-IPL kernel is SUSE Linux Enterprise Server or later.

See "Avoid parameters that break GRUB 2" on page 25.

Attributes for fcp

You can find the attributes for re-IPL type fcp in the `/sys/firmware/reipl/fcp` sysfs directory.

device Device number of the FCP device that is used for re-IPL. For example, 0.0.7412.

Note: IPL is possible only from subchannel set 0.

wwpn World wide port number of the FCP re-IPL device.

lun Logical unit number of the FCP re-IPL device.

loadparm

If the re-IPL target is a SUSE Linux Enterprise Server 12 SP3 kernel, up to eight characters to specify parameters for GRUB 2. The specification must be of the form **g**<*grub_parameters*>. Typically, <*grub_parameters*> is a specification that selects an entry in the GRUB 2 menu. For details, see "Specifying GRUB 2 parameters" on page 70.

bootprog
Boot program selector to select the kernel to be booted.

0 or 1
immediately starts GRUB 2 for booting the target kernel.

2 boots a rescue kernel.

If you omit this specification, GRUB 2 is started after a timeout period has expired.

br_lba Boot record logical block address. Master boot record. Is always 0 for Linux.

scp_data
Kernel parameters to be used for the next FCP re-IPL.

A leading equal sign (=) means that the existing kernel parameter line in the boot configuration is ignored and the boot process uses the kernel parameters in the `scp_data` attribute only.

Important:

- If the re-IPL kernel is SUSE Linux Enterprise Server 12 or later, be sure not to specify kernel parameters that prevent the target kernel from booting.
- In particular, do not use a leading equal sign if the re-IPL kernel is SUSE Linux Enterprise Server or later.

See "Avoid parameters that break GRUB 2" on page 25.

Attributes for nss

You can find the attributes for re-IPL type nss in the `/sys/firmware/reipl/nss` sysfs directory.

name Name of the NSS. The NSS name can be 1-8 characters long and must consist of alphabetic or numeric characters. The following examples are all valid NSS names: 73248734, NSSCSITE, or NSS1234.

parm A 56-byte string of parameters for the operating system in the NSS.

You cannot load SUSE Linux Enterprise Server 12 or later from an NSS. If the NSS contains a Linux distribution that supports NSS, the value could be a string of kernel parameters.

Kernel panic settings

Set the attribute `/sys/firmware/shutdown_actions/on_panic` to `reipl` to make the system re-IPL with the current re-IPL settings if a kernel panic occurs.

See also the description of the **dumpconf** tool in *Using the Dump Tools on SUSE Linux Enterprise Server 12 SP1*, SC34-2746 on the IBM Knowledge Center website at www.ibm.com/support/knowledgecenter/linuxonibm/com.ibm.trouble.doc/serviceandsupport.html

Examples for configuring re-IPL

Typical examples include configuring re-IPL from an FCP device and specifying parameters for re-IPL.

- To configure an FCP re-IPL device 0.0.5711 with a LUN 0x1711000000000000 and a WWPN 0x5005076303004715 with an additional kernel parameter `noresume`:

```
# echo 0.0.5711 > /sys/firmware/reipl/fcp/device
# echo 0x5005076303004715 > /sys/firmware/reipl/fcp/wwpn
# echo 0x1711000000000000 > /sys/firmware/reipl/fcp/lun
# echo 0 > /sys/firmware/reipl/fcp/bootprog
# echo 0 > /sys/firmware/reipl/fcp/br_lba
# echo fcp > /sys/firmware/reipl/reipl_type
```

- To set up re-IPL from a CMS NSS:
  1. Set the reipl_type to nss:

     ```
     # echo nss > /sys/firmware/reipl/reipl_type
     ```

  2. Set up the attributes in the nss directory:

     ```
     # echo CMSNSS > /sys/firmware/reipl/reipl_type/nss/name
     # echo "AUTOCR" > /sys/firmware/reipl/reipl_type/nss/parm
     ```

Chapter 6. Suspending and resuming Linux

With suspend and resume support, you can stop a running Linux on z Systems instance and later continue operations.

When Linux is suspended, data is written to a swap partition. The resume process uses this data to make Linux continue from where it left off when it was suspended. A suspended Linux instance does not require memory or processor cycles.

Linux on z Systems suspend and resume support applies to both Linux on z/VM and Linux instances that run directly in an LPAR.

While a Linux instance is suspended, you can run another Linux instance in the z/VM guest virtual machine or in the LPAR where the suspended Linux instance was running.

What you should know about suspend and resume

Before suspending a Linux instance, you must be aware of the prerequisites and of activities that can cause resume to fail.

Prerequisites for suspending a Linux instance

Suspend and resume support checks for conditions that might prevent resuming a suspended Linux instance. You cannot suspend a Linux instance unless all prerequisites are fulfilled.

The following prerequisites must be fulfilled regardless of whether a Linux instance runs directly in an LPAR or as a z/VM guest:

- All tape device nodes must be closed and online tape drives must be unloaded.
- The Linux instance must not have used any hotplug memory since it was last booted.
- No program must be in a prolonged uninterruptible sleep state.

  Programs can assume this state while they are waiting for an outstanding I/O request to complete. Most I/O requests complete in a very short time and do not compromise suspend processing. An example of an I/O request that can take too long to complete is rewinding a tape.

For Linux on z/VM, the following additional prerequisites must be fulfilled:

- No discontiguous saved segment (DCSS) device must be accessed in exclusive-writable mode.

  You must remove all DCSSs of segment types EW, SW, and EN by writing the DCSS name to the sysfs `remove` attribute.

  You must remove all DCSSs of segment types SR and ER that are accessed in exclusive-writable mode or change their access mode to `shared`.

  For more information, see “Removing a DCSS device” on page 421 and “Setting the access mode” on page 418.
- All device nodes of the z/VM recording device driver must be closed.
- All device nodes of the z/VM unit record device driver must be closed.
- No watchdog timer must run and the watchdog device node must be closed.

Precautions while a Linux instance is suspended

There are conditions outside the control of the suspended Linux instance that can cause resume to fail.

- The CPU configuration must remain unchanged between suspend and resume.
- The data that is written to the swap partition when the Linux instance is suspended must not be compromised.

  In particular, be sure that the swap partition is not used if another operating system instance runs in the LPAR or z/VM guest virtual machine while the initial Linux instance is suspended.
- If the Linux instance uses expanded storage (XPRAM), this expanded storage must remain unchanged until the Linux instance is resumed.

  If the size or content of the expanded memory is changed before the Linux instance is resumed or if the expanded memory is unavailable when the Linux instance is resumed, resuming fails with a kernel panic.
- If an instance of Linux on z/VM uses one or more DCSSs these DCSSs must remain unchanged until the Linux instance is resumed.

  If the size, location, or content of a DCSS is changed before the Linux instance is resumed, resuming fails with a kernel panic.
- Take special care when replacing a DASD and, thus, making a different device available at a particular device bus-ID.

  You might intentionally replace a device with a backup device. Changing the device also changes its UID-based device nodes. Expect problems if you run an application that depends on UID-based device nodes and you exchange one of the DASD the application uses. In particular, you cannot use multipath tools when the UID changes.
- Generally, avoid changes to the real or virtual hardware configuration between suspending and resuming a Linux instance.
- Disks that hold swap partitions or the root file system must be present when resuming the Linux instance.

Handling of devices that are unavailable when resuming

Devices that were available when the Linux instance was suspended might be unavailable when resuming.

If such unavailable devices were offline when the Linux instance was suspended, they are de-registered and the device name can be assigned to other devices.

If unavailable devices where online when the Linux instance was suspended, handling depends on the respective device driver. DASD and FCP devices remain registered as disconnected devices. The device name and the device configuration are preserved. Devices that are controlled by other device drivers are de-registered.

Handling of devices that become available at a different subchannel

The mapping between subchannels and device bus-IDs can change if the real or virtual hardware is restarted between suspending and resuming Linux.

If the subchannel changes for a DASD or FCP device, the device configuration is changed to reflect the new subchannel. This change is accomplished without de-registration. Thus, device name and device configuration are preserved.

If the subchannel changes for any other device, the device is de-registered and registered again as a new device.

Setting up Linux for suspend and resume

Configure suspend and resume support through kernel parameters, set up a suitable swap partition for suspending and resuming a Linux instance, and update your boot configuration.

Kernel parameters

You configure the suspend and resume support by adding parameters to the kernel parameter line.

suspend and resume kernel parameter syntax

```
►►──resume=<device_node>──┬──────────────────────┬──┬──────────┬──────────►◄
                          └─ no_console_suspend─┘  └─ noresume─┘
```

where:

resume=<*device_node*>
specifies the standard device node of the swap partition with the data that is required for resuming the Linux instance.

This swap partition must be available during the boot process (see "Updating the boot configuration" on page 80).

no_console_suspend
prevents Linux consoles from being suspended early in the suspend process. Without this parameter, you cannot see the kernel messages that are issued by the suspend process.

noresume
boots the kernel without resuming a previously suspended Linux instance. Add this parameter to circumvent the resume process, for example, if the data written by the previous suspend process is damaged.

Example

To use a partition `/dev/disk/by-path/ccw-0.0.b100-part2` as the swap partition and prevent Linux consoles from being suspended early in the suspend process specify:

```
resume=/dev/disk/by-path/ccw-0.0.b100-part2 no_console_suspend
```

Setting up a swap partition

During the suspend process, Linux writes data to a swap partition. This data is required later to resume Linux.

Set up a swap partition that is at least the size of the available LPAR memory or the memory of the z/VM guest virtual machine.

Do not use this swap partition for any other operating system that might run in the LPAR or z/VM guest virtual machine while the Linux instance is suspended.

You cannot suspend a Linux instance while most of the memory and most of the swap space are in use. If there is not sufficient remaining swap space to hold the data for resuming the Linux instance, suspending the Linux instance fails.

To assure sufficient swap space you might have to configure two swap partitions, one partition for regular swapping and another for suspending the Linux instance. Configure the swap partition for suspending the Linux instance with a lower priority than the regular swap partition.

Use the `pri=` parameter to specify the swap partitions in `/etc/fstab` with different priorities. See the swapon man page for details.

The following example shows two swap partitions with different priorities:

```
# cat /etc/fstab
...
/dev/disk/by-path/ccw-0.0.b101-part1 swap swap pri=-1 0 0
/dev/disk/by-path/ccw-0.0.b100-part2 swap swap pri=-2 0 0
```

In the example, the partition to be used for the resume data is `/dev/disk/by-path/ccw-0.0.b100-part2`.

You can check your current swap configuration by reading `/proc/swaps`.

```
# cat /proc/swaps
Filename                                Type         Size       Used     Priority
/dev/disk/by-path/ccw-0.0.b101-part1    partition    7212136    71056    -1
/dev/disk/by-path/ccw-0.0.b100-part2    partition    7212136    0        -2
```

Updating the boot configuration

You have to update your boot configuration to include the kernel parameters that are required for resuming Linux.

Procedure

Perform these steps to create a boot configuration that supports resuming your Linux instance:

1. Run **`dracut -f`** to create an initial RAM disk with the module parameter that identifies your device with the swap partition and with the device driver required for this device.
2. Reboot your Linux instance.

Configuring for fast resume

The more devices are available to a Linux instance, the longer it takes to resume a suspended instance.

With a thousand or more available devices, the resume process can take longer than an IPL. If the duration of the resume process is critical for a Linux instance with many devices, include unused devices in the exclusion list (see “cio_ignore - List devices to be ignored” on page 684 and “cio_ignore - Manage the I/O exclusion list” on page 522).

Suspending a Linux instance

Suspend a Linux instance by writing to the `/sys/power/state` sysfs attribute.

Before you begin

Attention: Only suspend a Linux instance for which you have specified the `resume=` kernel parameter. Without this parameter, you cannot resume the suspended Linux instance.

Procedure

Enter the following command to suspend a Linux instance:

```
# echo disk > /sys/power/state
```

Results

On the Linux console you might see progress indications until the console itself is suspended. Most of these messages require log level 7 or higher to be printed. See "Using the magic sysrequest feature" on page 49 about setting the log level. You cannot see such progress messages if you suspend the Linux instance from an ssh session.

Resuming a suspended Linux instance

Boot Linux to resume a suspended Linux instance.

About this task

Use the same kernel, initial RAM disk, and kernel parameters that you used to first boot the suspended Linux instance.

You must reestablish any terminal session for HVC terminal devices and for terminals that are provided by the iucvtty program. You also must reestablish all ssh sessions that have timed out while the Linux instance was suspended.

If resuming the Linux instance fails, boot Linux again with the `noresume` kernel parameter. The boot process then ignores the data that was written to the swap partition and starts Linux without resuming the suspended instance.

Chapter 7. Shutdown actions

Several triggers can cause Linux to shut down. For each shutdown trigger, you can configure a specific shutdown action to be taken as a response.

Table 13. Shutdown triggers and default action overview

Trigger	Command or condition	Default shutdown action
halt	Linux **chshut** command	stop
poff	Linux **poweroff** or **chshut** command	stop
reboot	Linux **reboot** or **chshut** command	reipl
restart	• **PSW restart** on the HMC for Linux in LPAR mode • z/VM CP **system restart** command for Linux on z/VM	stop
panic	Linux **dumpconf** command	stop

The available shutdown actions are summarized in Table 14.

Table 14. Shutdown actions

Action	Explanation	See also
stop	For `panic` or `restart`, enters a disabled wait state. For all other shutdown triggers, stops all CPUs.	n/a
ipl	Performs an IPL according to the specifications in `/sys/firmware/ipl`.	"Displaying current IPL parameters" on page 70
reipl	Performs an IPL according to the specifications in `/sys/firmware/reipl`.	"Rebooting from an alternative source" on page 72
dump	Creates a dump according to the specifications in `/sys/firmware/dump`.	*Using the Dump Tools on SUSE Linux Enterprise Server 12 SP1*, SC34-2746
dump_reipl	Performs the `dump` action followed by the `reipl` action.	*Using the Dump Tools on SUSE Linux Enterprise Server 12 SP1*, SC34-2746
vmcmd	For Linux on z/VM, issues one or more z/VM CP commands according to the specifications in `/sys/firmware/vmcmd`.	"Configuring z/VM CP commands as a shutdown action" on page 85

Use **lsshut** to find out which shutdown action is configured for each shutdown trigger, see "lsshut - List the current system shutdown actions" on page 608.

Use the applicable command for setting the actions to be taken on shutdown:

- For `halt`, `power off`, and `reboot` use **chshut**, see "chshut - Control the system shutdown actions" on page 511.
- For `panic` use **dumpconf**, see *Using the Dump Tools on SUSE Linux Enterprise Server 12 SP1*, SC34-2746

kdump for restart and panic

If kdump is set up for a Linux instance, kdump is started to create a dump, regardless of the shutdown actions that are specified for `restart` and `panic`. With kdump, these settings act as a backup that is used only if kdump fails.

Note: kdump is not a shutdown action that you can set as a sysfs attribute value for a shutdown trigger. See *Using the Dump Tools on SUSE Linux Enterprise Server 12 SP1*, SC34-2746 about how to set up kdump.

The shutdown configuration in sysfs

The configured shutdown action for each shutdown trigger is stored in a sysfs attribute `/sys/firmware/shutdown_actions/on_<trigger>`.

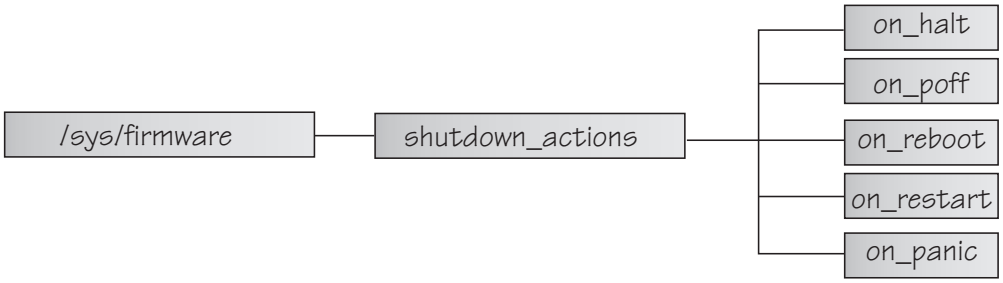

Figure 21. sysfs branch with shutdown action settings

The preferred way to read or change these settings is using the **lsshut**, **chshut**, and **dumpconf** commands. Alternatively, you can read and write to the `/sys/firmware/shutdown_actions/on_<trigger>` attributes.

Examples

- This command reads the shutdown setting for the `poff` shutdown trigger.

```
# cat /sys/firmware/shutdown_actions/on_poff
stop
```

- This command changes the setting for the `restart` shutdown trigger to `ipl`:

```
# echo ipl > /sys/firmware/shutdown_actions/on_restart
```

Details for the `ipl`, `reipl`, `dump`, and `vmcmd` shutdown actions are contained in the corresponding subdirectories in `/sys/firmware`. For example, `/sys/firmware/ipl` contains specifications for an IPL device and other IPL parameters.

Configuring z/VM CP commands as a shutdown action

Use **chshut** and **dumpconf** to configure a CP command as a shutdown action, or directly write to the relevant sysfs attributes.

Before you start: This information applies to Linux on z/VM only.

In sysfs, two attributes are required to set a z/VM CP command as a shutdown action for a trigger <*trigger*>:

- `/sys/firmware/shutdown_actions/on_<trigger>` must be set to `vmcmd`.
- `/sys/firmware/vmcmd/on_<trigger>` specifies the z/VM CP command.

The values of the attributes in the `/sys/firmware/vmcmd` directory must conform to these rules:

- The value must be a valid z/VM CP command.
- The commands, including any z/VM user IDs or device numbers, must be specified with uppercase characters.
- Commands that include blanks must be delimited by double quotation marks (").
- The value must not exceed 127 characters.

You can specify multiple z/VM CP commands that are separated by the newline character "\n". Each newline is counted as one character. When writing values with multiple commands, use this syntax to ensure that the newline character is processed correctly:

```
# echo -e <cmd1>\n<cmd2>... | cat > /sys/firmware/vmcmd/on_<trigger>
```

where `<cmd1>\n<cmd2>...` are two or more z/VM CP commands and `on_<trigger>` is one of the attributes in the `vmcmd` directory.

The **-e echo** option and redirect through **cat** are required because of the newline character.

Example for a single z/VM CP command

Issue the following command to configure the z/VM CP LOGOFF command as the shutdown action for the `poff` shutdown trigger.

```
# chshut poff vmcmd "LOGOFF"
```

Alternatively, you can issue the following commands to directly write the shutdown configuration to sysfs:

```
# echo vmcmd > /sys/firmware/shutdown_actions/on_poff
# echo LOGOFF > /sys/firmware/vmcmd/on_poff
```

Figure 22 on page 86 illustrates the relationship of the sysfs attributes for this example.

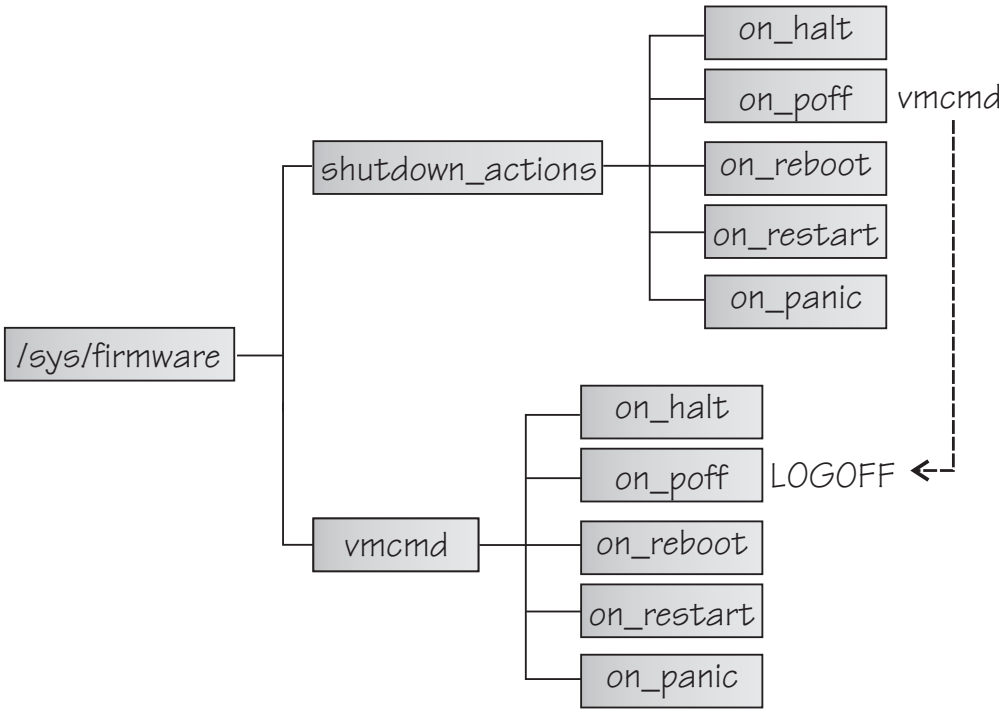

Figure 22. sysfs branch with shutdown action settings

Example for multiple z/VM CP commands

Issue the following command to configure two z/VM CP commands as the shutdown action for the `poff` shutdown trigger. First a message is sent to user OPERATOR, and then the LOGOFF command is issued.

```
# chshut poff vmcmd "MSG OPERATOR Going down" vmcmd "LOGOFF"
```

Alternatively, you can issue the following commands to directly write the shutdown configuration to sysfs:

```
# echo vmcmd > /sys/firmware/shutdown_actions/on_poff
# echo -e "MSG OPERATOR Going down\nLOGOFF" | cat > /sys/firmware/vmcmd/on_poff
```

Chapter 8. Remotely controlling virtual hardware - snipl

snipl is a command line tool for remotely controlling virtual z Systems hardware.

This information applies to simple network IPL (snipl) version 2.3.0. A snipl package is provided with SUSE Linux Enterprise Server 12 SP3.

You can use **snipl** to activate and deactivate virtual z Systems hardware with Linux instances. You can set up a Linux instance on a mainframe system or on a different hardware platform for running **snipl**.

snipl helps you to automate tasks that are typically performed by human operators, for example, through the graphical interfaces of the HMC or SE. Automation is required, for example, for failover setups within Linux clusters.

snipl can run in one of two modes, LPAR mode or z/VM mode.

Attention: **snipl** is intended for use by experienced system programmers and administrators. Incautious use of **snipl** can result in unplanned downtime and loss of data.

LPAR mode

In LPAR mode, **snipl** provides basic z Systems support element (SE) functions.

With **snipl** in LPAR mode, you can perform the following tasks:

- Activate, reset, or deactivate an LPAR.
- Load (IPL) an LPAR from a disk device, for example, a DASD device or a SCSI device.
- Create a dump on a DASD or SCSI dump device.
- Send commands to the operating system and retrieve operating system messages.

Setting up snipl for LPAR mode

The Linux instance where **snipl** runs requires access to all SEs that control LPARs you want to work with.

snipl uses the “hwmcaapi” network management application programming interfaces (API) provided by the SE. The API establishes an SNMP network connection and uses the SNMP protocol to send and retrieve data. The libraries that implement the API are available from IBM Resource Link® at www.ibm.com/servers/resourcelink.

Customize the API settings on the HMC or SE you want to connect to:

- Configure SNMP support.
- Add the IP address of the Linux instance where **snipl** runs and set the SNMP community.

  If the communication is through IPv6, an IPv6 community string must be set.
- In the firewall settings, ensure that UDP port 161 and TCP port 3161 are enabled.

If **snipl** in LPAR mode repeatedly reports a timeout, the specified SE is most likely inaccessible or not configured properly. For details about configuring the HMC or SE, see the following publications:

- The *Support Element Operations Guide* for your mainframe system.
- The applicable *Hardware Management Console Operations Guide*.
- *System z Application Programming Interfaces*, SB10-7030
- *S/390 Application Programming Interfaces*, SC28-8141

You can obtain these publications from IBM Resource Link at www.ibm.com/servers/resourcelink.

Command line syntax (LPAR mode)

There is a generic syntax with main options. Each main option has a specific set of parameters.

"Overview for LPAR mode" summarizes **snipl** command in LPAR mode. Details for each option are provided in context in the sections that follow.

Overview for LPAR mode

On the command line, a **snipl** command in LPAR mode always requires a main option, access data, and , with one exception, specifications for one or more LPARs.

LPAR mode: overview

```
►►─snipl──────────────────────────────────────────────────────────────►
   ┌──────────────────────────────────────────────────────────────────┐
   │   ┌──────────────┐                                                │
   │   ▼              │                                                │
   ►───<image_name>───┴─┤ lpar-access-data ├──┬─ -a─┤ activate parameters ├──┬──────────►◄
   │                    │                     ├─ -d──────────────────────┤  │
   │                    │                     │    └─ -F─┘               │  │
   │                    │                     ├─ -r──────────────────────┤  │
   │                    │                     │    └─ -F─┘               │  │
   │                    │                     ├─ -o──────────────────────┤  │
   │                    │                     ├─ -g──────────────────────┤  │
   │                    │                     ├─ -l─┤ load parameters ├────┤  │
   │                    │                     │   ┌─ -s─┤ SCSI parameters ├─┤  │
   │                    │                     │   └─ -D─┘                  │  │
   │   ┌──────────────┐ │                     │                            │  │
   │   └─<image_name>─┴─┤ lpar-access-data ├──┴─ -x─┤ list parameters ├────┤  │
   │                    │                                                  │  │
   └─<image_name>───┴─┤ lpar-access-data ├──┴─ -i─┤ dialog parameters ├──┘
```

Where:

<image_name>
specifies an LPAR. If **snipl** directly accesses the SE, this is the LPAR name as defined in the hardware setup.

If **snipl** accesses the SE through an HMC, the specification has the format <*mainframe_system*>-<*lpar_name*> where <*mainframe_system*> is the name that identifies the mainframe on the HMC. If you are using a **snipl** configuration file that defines an alias for an LPAR, you can specify the alias.

SE Example: `lpar204`

HMC Example: `z02-lpar204`

A **snipl** command applies to one or more LPARs that are controlled by the same HMC or SE. If multiple LPARs are specified, it is assumed that all LPARs are controlled by the same HMC or SE as the first LPAR. Other LPARs are ignored.

|lpar-access-data|
is described in "Specifying access data for LPAR mode."

-a, -d, -r, -o, -g
are described in "Activate, deactivate, reset, stop, or get status information" on page 90.

-l is described in "Perform an IPL operation from a CCW device" on page 92.

-s, -D
are described in "Perform an IPL or dump operation from a SCSI device" on page 93.

-x is described in "List LPARs" on page 95.

-i is described in "Emulate the Operating Systems Messages applet" on page 96.

-F or --force
unconditionally forces the operation.

-v or --version
displays the version of **snipl** and exits.

-h or --help
displays a short usage description and exits. To view the man page enter **man snipl**.

Specifying access data for LPAR mode

The **snipl** command requires access data for the HMC or SE that controls a particular LPAR.

lpar-access-data:

```
                        (1)   ┌ -p public ──────┐
├── -L <ip_address> ──────────┼─────────────────┼──┬ -u <user> ──┬──────────────────►
                              ├ -p <community> ─┤  └ -e ────────┘
                              └ -P ─────────────┘

  ┌ -f <defaultfile> ─┐  ┌ --timeout 60000 ─────┐
►─┼───────────────────┼──┼──────────────────────┼──────────────────────────────────┤
  └ -f <filename> ────┘  └ --timeout <timeout> ─┘
```

Notes:

1 **-L** can be omitted if the required information is specified through a configuration file.

-L <*ip_address*> or --lparserver <*ip_address*>
specifies the IP address or host name of the HMC or SE that controls the LPAR or LPARs you want to work with. You can use IPv6 or IPv4 connections.

You can omit this parameter if the IP address or host name is specified through a configuration file.

-p <*community*> or --password <*community*>
specifies the password in the SNMP configuration settings on the SE that controls the LPAR or LPARs you want to work with. This parameter can also be specified through a configuration file. The default password is `public`.

Note: The default password feature is deprecated and will be removed in a subsequent release.

-P or --promptpassword
prompts for a password in protected entry mode.

-e or --noencryption
specifies that no encryption is used when connecting to the server. A user name is not allowed if encryption is disabled. This parameter can also be specified through a configuration file.

-u <*user*> or --userid <*user*>
specifies an SNMPv3 user identifier that is authorized to access an HMC or SE. This parameter can be omitted if it is specified in the configuration file.

-f <*filename*> or --configfilename <*filename*>
specifies the name of a configuration file that maps LPARs to the corresponding specifications for the HMC or SE address and password (community).

If no configuration file is specified, the user-specific default file `~/.snipl.conf` is used. If this file does not exist, the system default file `/etc/snipl.conf` is used.

Be sure that the command-line parameters you provide uniquely identify the configuration-file section you want to work with. If you specify multiple LPARs on the command line, only the first specification is used to identify the section. If your specifications map to multiple sections, the first match is processed.

If conflicting specifications are provided through the command line and the configuration file, the command-line specification is used.

If a configuration file is neither specified nor available at the default locations, all required parameters must be specified on the command line.

For more information about the configuration file, see "The snipl configuration file" on page 101.

--timeout <*timeout*>
specifies the timeout in milliseconds for general management API calls. The default is 60000 ms.

Activate, deactivate, reset, stop, or get status information

Several main options follow a simple command syntax that requires specifications for one or more LPARs and the corresponding access data.

LPAR mode: -a, -d, -r, -o, -g options

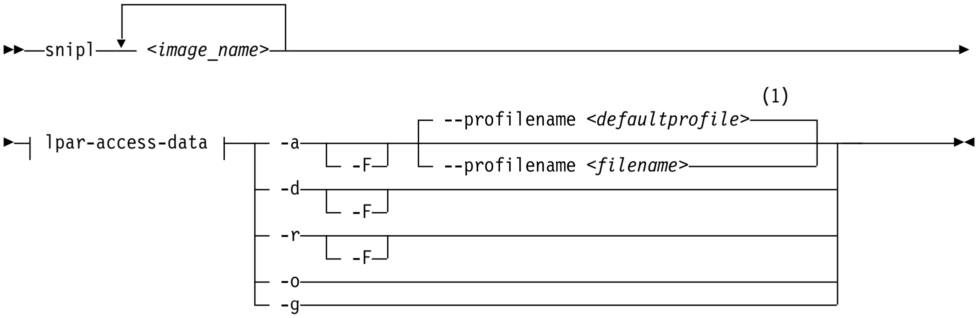

Notes:

1 If not specified, the HMC or SE default profile for the specified LPAR is used.

Where:

`<image_name>`
see "Overview for LPAR mode" on page 88.

`|lpar-access-data|`
see "Specifying access data for LPAR mode" on page 89.

`-a or --activate`
activates the specified LPARs.

`--profilename <filename>`
specifies an activation profile. If omitted, the SE or an HMC default profile for the specified LPAR is used.

`-d or --deactivate`
deactivates the specified LPARs.

`-r or --reset`
resets the specified LPARs.

`-o or --stop`
stops all CPUs for the specified LPARs.

`-g or --getstatus`
returns the status for the specified LPARs.

`-F or --force`
unconditionally forces the operation.

Examples

- The following command deactivates an LPAR `SZ01LP02` with the force option:

```
# snipl SZ01LP02 -L 192.0.2.4 -e -P -d -F
Enter password:
Warning : No default configuration file could be found/opened.
processing......
SZ01LP02: acknowledged.
```

- The following command retrieves the status for an LPAR `SZ01LP03`:

```
# snipl SZ01LP03 -L 192.0.2.4 -e -P -g
Enter password:
Warning : No default configuration file could be found/opened.
status of sz01lp03:  operating
```

- The following command retrieves the status for an LPAR `SZ02LP03` on a mainframe system that is identified as `SZ02` on an HMC with an IP address `2001:0db8::11a0`:

```
# snipl SZ02-SZ02LP03 -L 2001:0db8::11a0 -e -P -g
Enter password:
Warning : No default configuration file could be found/opened.
status of SZ02-SZ02LP03:  operating
```

Perform an IPL operation from a CCW device

To IPL an LPAR from a CCW device, **snipl** requires specifications for the LPAR, the corresponding access data, and the IPL device. There are also several optional parameters.

For IPL from a SCSI device, see "Perform an IPL or dump operation from a SCSI device" on page 93.

LPAR mode: IPL from CCW

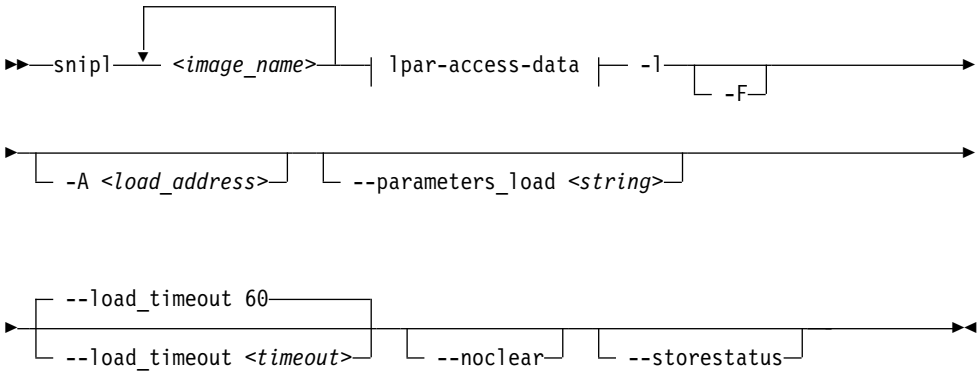

Where:

<image_name>
specifies the LPARs for which to perform the IPL. If multiple LPARs are specified, the same IPL device and IPL parameters are used for all of them. See also "Overview for LPAR mode" on page 88.

|lpar-access-data|
see "Specifying access data for LPAR mode" on page 89.

-l or --load
performs an IPL for the specified LPARs.

-F or --force
unconditionally forces the IPL operation.

-A <*loadaddress*> or --address_load <*loadaddress*>
specifies the hexadecimal four-digit device number of the IPL device. To use a device from a subchannel set other than 0, specify five digits: The subchannel set ID followed by the device number, for example 15199. The default is subchannel set 0. If the `-A` parameter is omitted, the IPL device of the most recent IPL of the LPAR is used.

--parameters_load <*string*>
specifies a parameter string for IPL. If this parameter is omitted, the string of the most recent IPL of the LPAR is used.

--load_timeout <*timeout*>
specifies the maximum time for load completion in seconds. The timeout must be in the range of 60 - 600 seconds. The default timeout is 60 seconds.

If the timeout expires, control is returned without an indication about the success of the IPL operation.

--noclear
prevents the memory from being cleared before loading.

--storestatus
stores status before performing the IPL. This option implies **--noclear** and also prevents the main memory from being cleared before loading.

Examples:

- The following command performs an IPL from a CCW device with bus ID `0.0.5119` for an LPAR `SZ02LP03` on a mainframe system that is identified as `SZ02` on an HMC with an IP address `2001:0db8::11a0`:

```
# snipl SZ02-SZ02LP03 -L 2001:0db8::11a0 -e -P -l -A 5119
Enter password:
Warning : No default configuration file could be found/opened.
processing......
SZ02-SZ02LP03: acknowledged.
```

- To perform an IPL from a CCW device in subchannel set 1 with the bus ID `0.1.5119` for an LPAR `SZ03LP00`:

```
% snipl SZ03LP00 -L 192.0.2.4 -e -P -l -A 15119
```

Perform an IPL or dump operation from a SCSI device

To IPL an LPAR from a SCSI device, **snipl** requires specifications for the LPAR, the corresponding access data, the IPL device, target WWPN, and LUN. There are also several optional parameters.

For IPL from a CCW device, see "Perform an IPL operation from a CCW device" on page 92.

LPAR mode: SCSI IPL or dump

```
►►─snipl──┬─<image_name>─┬─┤ lpar-access-data ├─┬─ -s ─┬─┬─ -F ─┬──────────────►
          ▲              │                    └─ -D ─┘ └──────┘
►─┬─ -A <load_address> ─┬─┬─ --parameters_load <string> ─┬──────────────────────►
  └─────────────────────┘ └──────────────────────────────┘
►─┬─ --wwpn_scsiload <portname> ─┬─┬─ --lun_scsiload <unitnumber> ─┬──────────►
  └──────────────────────────────┘ └───────────────────────────────┘
►─┬─ --bps_scsiload <selector> ─┬─┬─ --ossparms_scsiload <string> ─┬──────────►
  └─────────────────────────────┘ └────────────────────────────────┘
►─┬─ --bootrecord_scsiload <hexaddress> ─┬──────────────────────────────────►◄
  └──────────────────────────────────────┘
```

Where:

<image_name>
specifies the LPARs for which to perform the IPL or dump operation. If multiple LPARs are specified, the same command parameters apply to all of them. See also "Overview for LPAR mode" on page 88.

|lpar-access-data|
see "Specifying access data for LPAR mode" on page 89.

-s or --scsiload
performs an IPL from a SCSI device for the specified LPARs.

-D or --scsidump
creates a dump for the specified LPAR to a SCSI device.

-F or --force
unconditionally forces the operation.

-A <*loadaddress*> or --address_load <*loadaddress*>
specifies the hexadecimal four-digit device number of the IPL device. If this parameter is omitted, the IPL device of the most recent SCSI IPL of the LPAR is used.

Note: The IPL device must be on subchannel set 0.

--parameters_load <*string*>
specifies a parameter string for IPL. If this parameter is omitted, the string of the most recent SCSI IPL of the LPAR is used.

--wwpn_scsiload <*portname*>
specifies the worldwide port name (WWPN) for the SCSI IPL device. If fewer

than 16 characters are specified, the WWPN is padded with zeroes at the end. If this parameter is omitted, the WWPN of the most recent SCSI IPL of the LPAR is used.

--lun_scsiload <*unitnumber*>
specifies the logical unit number (LUN) for the SCSI IPL device. If fewer than 16 characters are specified, the LUN is padded with zeroes at the end. If this parameter is omitted, the LUN of the most recent SCSI IPL of the LPAR is used.

--bps_scsiload <*selector*>
specifies the boot program that is required for the SCSI IPL device. Selector values are in the range 0 - 30. If this parameter is omitted, the boot program of the most recent SCSI IPL of the LPAR is used.

--ossparms_scsiload <*string*>
specifies an operating system-specific parameter string for IPL from a SCSI device. If this parameter is omitted, the string of the most recent SCSI IPL of the LPAR is used. This parameter string is ignored by the boot program and passed to the operating system or dump program to be loaded. For example, you can specify additional kernel parameters for Linux (see "Adding kernel parameters when booting Linux" on page 26).

--bootrecord_scsiload <*hexaddress*>
specifies the boot record logical block address for the SCSI IPL device. If fewer than 16 characters are specified, the address is padded with zeroes at the end. If this parameter is omitted, the address of the most recent SCSI IPL of the LPAR is used.

Example: The following command performs a SCSI IPL for an LPAR `SZ01LP00`:

```
# snipl SZ01LP00 -L 192.0.2.4 -e -P -s -A 3d0f --wwpn_scsiload 500507630303c562 \
--lun_scsiload 4010404900000000
Enter password:
Warning : No default configuration file could be found/opened.
processing...
SZ01LP00: acknowledged.
```

Note: Instead of using the continuation sign (\) at the end of the first line, you can specify the complete command on a single line.

List LPARs

To list all LPARs that are controlled by an HMC or SE, **snipl** requires specifications for the HMC or SE and the corresponding access data.

Use the **-x** option to list all LPARs of a z Systems mainframe.

LPAR mode: list

```
►►─snipl─┬──────────────────┬─┤ lpar-access-data ├─ -x──────────────────────►◄
         └─ <image_name>────┘
```

Where:

<image_name>
specifies an LPAR to identify a section in the **snipl** configuration file. Omit this parameter if an HMC or SE is specified with the **-L** option (see "Overview for LPAR mode" on page 88).

|lpar-access-data|
see "Specifying access data for LPAR mode" on page 89.

-x or --listimages
retrieves a list of all LPARs from the specified HMC or SE. If an HMC is specified, all LPARs for all managed mainframe systems are listed.

Example: The following command lists the LPARs for an SE with IP address 192.0.2.4:

```
# snipl -L 192.0.2.4 -e -P -x
Enter password:
Warning : No default configuration file could be found/opened.

available images for server 192.0.2.4 :

    SZ01LP00      SZ01LP01      SZ01LP02      SZ01LP03
```

Emulate the Operating Systems Messages applet

To emulate the HMC or SE Operating Systems Messages applet, **snipl** requires specifications for the LPAR and the corresponding access data. There are also optional parameters.

Use the **-i** option to start an emulation of the HMC or SE Operating Systems Messages applet for a specified LPAR. End the emulation with CTRL+D.

LPAR mode: dialog

```
►►─snipl─ <image_name>─┤ lpar-access-data ├─ -i──────────────────────►

  ┌─ --msgtimeout 5000──────┐
►─┤                         ├──┬──────────────────────────────────────►◄
  └─ --msgtimeout <interval>─┘  └─ --msgfilename <name>─┘
```

Where:

<image_name>
specifies the LPAR for which you want to emulate the HMC or SE Operating Systems Messages applet (see also "Overview for LPAR mode" on page 88).

|lpar-access-data|
see "Specifying access data for LPAR mode" on page 89.

-i or --dialog
starts an emulation of the HMC or SE Operating System Message applet for the specified LPAR.

--msgtimeout *<interval>*
specifies the timeout for retrieving operating system messages in milliseconds. The default value is 5000 ms.

-M <*name*> or --msgfilename <*name*>
specifies a file to which the operating system messages are written in addition to stdout. If no file is specified, the operating system messages are written to stdout only.

Example: The following command opens an emulation of the SE Operating Systems Messages applet with the operating system instance that runs on LPAR `SZ01LP02`. During the emulation session, the operating system messages are written to a file, `SZ01LP02.transcript`.

```
# snipl SZ01LP02 -L 192.0.2.4 -e -P -i -M SZ01LP02.transcript
Enter password:
Warning : No default configuration file could be found/opened.
processing......
...
```

z/VM mode

With **snipl** in z/VM mode, you can log on, reset, or log off a z/VM guest virtual machine.

Setting up snipl for z/VM mode

The Linux instance where **snipl** runs requires access to the systems management API of all z/VM systems that host z/VM guest virtual machines you want to work with.

snipl in z/VM mode uses the systems management application programming interfaces (APIs) of z/VM. How **snipl** communicates with the API on the z/VM system depends on your z/VM system version and on your system setup.

If **snipl** in z/VM mode repeatedly reports "RPC: Port mapper failure - RPC timed out", it is most likely that the z/VM system is inaccessible, or not set up correctly. Although only one of the communication methods uses RPC, this method is the fallback method that is tried if the other method fails.

Using a SMAPI request server

snipl can access the systems management API through a SMAPI request server. The following configuration is required for the z/VM systems you want to work with:

- An AF_INET based SMAPI request server must be configured.
- A port on which the request server listens must be set up.
- A z/VM user ID to be specified with the **snipl** command must be set up. This user ID must be authorized for the request server.

For more information, see *z/VM Systems Management Application Programming*, SC24-6234.

Using a VSMSERVE service machine

snipl can access the systems management API through a VSMSERVE service machine on your z/VM system. The following configuration is required for the z/VM systems you want to work with:

- The VSMSERVE service machine must be configured and authorized for the directory manager.

- The `vsmapi` service must be registered.
- A z/VM user ID to be specified with the **snipl** command must be set up. This user ID must be authorized for VSMSERVE.

For more information, see *z/VM Systems Management Application Programming*, SC24-6122-02 or earlier.

Command line syntax (z/VM mode)

In z/VM mode, the **snipl** command requires specification for a guest virtual machine, credentials, and other access data for the systems management API. There are also several optional parameters.

snipl command syntax (z/VM mode)

```
►►─snipl──┬─<guest_id>─┬──────────────────────────────────────►
          ◄────────────┘
►─┤ zvm-access-data ├──┬─ -a ──────────────────────────────────►◄
                       │      ┌─ -X 300 ──────┐
                       ├─ -d ─┼─ -X <maxperiod>─┤
                       │      └─ -F ──────────┘
                       ├─ -r ──────────────────┤
                       ├─ -g ──────────────────┤
                       └─ -x ──────────────────┘
```

zvm-access-data:

```
├─ -V <ip_address>──┬──────────────────────────────────────►
                    │                   (1)
                    └─ -z <portnumber>──┘

                                                   (2)
                                          ┌─ -f <defaultfile>──┐
►─ -u <user_id>──┬──────┬── -p <password>─┼──────────────────┼──►
                 └─ -e ─┘  └─ -P ──────────┘  └─ -f <filename>─┘

   ┌─ --timeout 60000──┐
►──┼────────────────────┼──────────────────────────────────┤
   └─ --timeout <timeout>─┘
```

Notes:

1 Required for connections through a SMAPI request server, unless the port is specified through a configuration file.

2 **-V**, **-u**, and **-p** can be omitted if the required data is specified through a configuration file.

Where:

<guest_id>
specifies the z/VM guest virtual machine you want to work with. Specify multiple z/VM user IDs to perform the same action for multiple z/VM guest virtual machines.

If you are using a **snipl** configuration file that defines an alias for a z/VM guest virtual machine, you can specify the alias.

You can omit this parameter for the **-x** option if other specifications on the command line identify a section in the configuration file.

-V <*ip_address*> or --vmserver <*ip_address*>
specifies the IP address or host name of the SMAPI request server or

VSMSERVE service machine through which the specified z/VM guest virtual machines are controlled. You can use IPv6 or IPv4 connections.

This option can be omitted if defined in the configuration file.

-z <*portnumber*> or --port <*portnumber*>
specifies the port at which the SMAPI request server listens.

-u <*user_id*> or --userid <*user_id*>
specifies a z/VM user ID that is authorized to access the SMAPI request server or VSMSERVE service machine. This option can be omitted if defined in the configuration file.

-e or --noencryption
specifies that no encryption is used when connecting to the server. This parameter can also be specified through a configuration file. To use encryption, you require a configuration file with an SSL fingerprint defined.

-p <*password*> or --password <*password*>
specifies the password for the z/VM user ID specified with **--userid**. This option can be omitted if defined in the configuration file.

-P or --promptpassword
prompts for a password in protected entry mode.

-f <*filename*> or --configfilename <*filename*>
specifies the name of a configuration file that maps z/VM guest virtual machines to the corresponding specifications for the SMAPI request server or VSMSERVE service machine, the authorized z/VM user ID, and the password.

If no configuration file is specified, the user-specific default file `~/.snipl.conf` is used. If this file does not exist, the system default file `/etc/snipl.conf` is used.

Be sure that the command line parameters you provide uniquely identify the configuration-file section you want to work with. If you specify multiple z/VM guest virtual machines on the command line, only the first specification is used to identify the section. If your specifications map to multiple sections, the first match is processed.

If conflicting specifications are provided through the command line and the configuration file, the command line specification is used. If no configuration file is used, all required parameters must be specified on the command line.

For more information about the configuration file, see "The snipl configuration file" on page 101.

--timeout <*timeout*>
specifies the timeout in milliseconds for general management API calls. The default is 60000 ms.

-a or --activate
logs on the specified z/VM guest virtual machines.

-d or --deactivate
logs off the specified z/VM guest virtual machines.

-X <*maxperiod*> or --shutdowntime <*maxperiod*>
specifies the maximum period, in seconds, granted for graceful completion before CP FORCE commands are issued against the specified z/VM guest virtual machines. By default, the maximum period is 300 s.

-F or --force
immediately issues CP FORCE commands to log off the specified z/VM guest virtual machines. This parameter is equivalent to **-X 0**.

-r or --reset
logs off the specified z/VM guest virtual machines and then logs them back on.

-g or --getstatus
returns the status for the specified z/VM guest virtual machines.

-x or --listimages
lists the z/VM guest virtual machines as specified in a configuration-file section (see "The snipl configuration file"). You can identify the configuration file section with the **-V** parameter, by specifying a z/VM guest virtual machine, or by specifying a z/VM guest virtual machine and the **-u** parameter.

-v or --version
displays the version of **snipl** and exits.

-h or --help
displays a short usage description and exits. To view the man page enter **man snipl**.

Examples

- The following command logs on two z/VM guest virtual machines:

```
# snipl sndlnx04 sndlnx05 -V sandbox.www.example.com -e \
                          -z 44444 -u sndadm01 -p pw42play -a
Warning : No default configuration file could be found/opened.
* ImageActivate : Image sndlnx04 Request Successful
* ImageActivate : Image sndlnx05 Request Successful
```

- The following command logs off a z/VM guest virtual machine:

```
# snipl vm04lnxd -V 2001:0db8::1a:0015 -e -z 77899 -u vm04main -p mainpw -d
Warning : No default configuration file could be found/opened.
processing......
* ImageDeactivate : Image vm04lnxd Request Successful
```

The snipl configuration file

Use the **snipl** configuration file to provide parameter values to **snipl** instead of specifying all values on the command line.

See "Specifying access data for LPAR mode" on page 89 or "Command line syntax (z/VM mode)" on page 98 about how to include a configuration file when issuing a **snipl** command.

A **snipl** configuration file contains one or more sections. Each section consists of multiple lines with specifications of the form <*keyword*>=<*value*> for either a z/VM system or an SE.

The following rules apply to the configuration file:

- Lines that begin with a number sign (#) are comment lines. A number sign in the middle of a line makes the remaining line a comment.
- Empty lines are permitted.
- The specifications are not case-sensitive.

- The same configuration file can contain sections for snipl in both LPAR mode and z/VM mode.
- In a <*keyword*>=<*value*> pair, one or more blanks are allowed before or after the equal sign (=).

Table 15 summarizes the keywords for the configuration file and the command -line equivalents for LPAR mode and z/VM mode.

Table 15. snipl configuration file keywords

Keyword	Value for LPAR mode	Value for z/VM mode	Command-line equivalent
server (required)	Starts a configuration file section by specifying the IP address or host name of an HMC or SE. You can use IPv6 or IPv4 connections.	Starts a configuration file section by specifying the IP address or host name of a SMAPI request server or VSMSERVE service machine. You can use IPv6 or IPv4 connections.	(See note 1 on page 103)
type (required)	LPAR	VM	(See note 1 on page 103)
user (See note 2 on page 103)	n/a	A z/VM user ID that is authorized for the SMAPI request server or VSMSERVE service machine.	**-u** or **--user**
password (See note 3 on page 103)	The value for `community` in the SNMP settings of the SE. If not specified through either the configuration file or the command, the default, `public`, is used.	The password for the z/VM user ID specified with the **user** keyword. (See note 2 on page 103)	**-p** or **--password**
encryption	"no" specifies an SNMPv2 unencrypted connection. "yes" specifies an SNMPv3 encrypted connection.	"no" specifies unencrypted connection to the SMAPI request server. "yes" specifies use of the OpenSSL protocol when connecting to the SMAPI request server.	**-e** or **--noencryption**
sslfingerprint	n/a	If encryption is enabled, the fingerprint mechanism is used to detect man-in-the-middle attacks. Specified in the configuration file, the fingerprint value must be equal to the server certificate fingerprint for each new snIPL connection. The **sslfingerprint** connection parameter can be specified only in a configuration file.	
port	n/a	Required if the **server** keyword specifies the IP address or host name of a SMAPI request server.	**-z** or **--port**

Table 15. snipl configuration file keywords (continued)

Keyword	Value for LPAR mode	Value for z/VM mode	Command-line equivalent
image A valid section must have one or more lines with this keyword.	An LPAR name as defined in the mainframe hardware configuration. If the **server** keyword specifies an HMC, the specification begins with the name that identifies the mainframe on the HMC, followed by a hyphen (-), followed by the LPAR name. You can define an alias name for the LPAR by appending a forward slash (/) to the LPAR name and specifying the alias after the slash.	A z/VM user ID that specifies a target z/VM guest virtual machine. You can define an alias name for the z/VM user ID by appending a forward slash (/) to the ID and specifying the alias after the slash.	A list of one or more items that are separated by blanks and specified without a switch.

Note:

1. Jointly, the **server** and **type** keywords are equivalent to the command-line option **-L** for LPAR mode or to **-V** for z/VM mode.
2. Can be omitted and specified on the command line instead.
3. Do not include passwords in the **snipl** configuration file unless the security policy at your installation permits you to do so.

Figure 23 on page 104 shows a configuration file example with multiple sections, including sections for LPAR mode and for z/VM mode.

```
# z/VM system for Linux training sessions
server = sandbox.www.example.com
type = VM
password = pw42play
encryption = yes
sslfingerprint = a2:ea:81:ed:e9: ... 84:cf:87:98:fe:38:54:c7
port = 44444
user = sndadm01
image = sndlnx01
image = sndlnx02
image = sndlnx03/tutor
image = sndlnx04
image = sndlnx05
image = sndcms01/c1

# SE for production SZ01
Server=192.0.2.4
type=LPAR
image=SZ01LP00
image=SZ01LP01
image=SZ01LP02
image=SZ01LP03

# HMC for test SZ02
Server = 2001:0db8::11a0
type=LPAR
encryption = yes
user = sz01adm
image=Z02-SZ02LP00/Z0200
image=Z02-SZ02LP01
image=Z02-SZ02LP02
image=Z02-SZ02LP03

# Production VM 04 - uses SMAPI
server = 2001:0db8::1a:0015
type = VM
encryption = no
port = 77899
user = VM04MAIN
image = VM04LNXA
image = VM04LNXC
image = VM04LNXD

# Production VM 05 - uses VSMSERVE so no port
server = 192.0.2.20
type = VM
encryption = no
user = VM05MAIN
image = VM05G001
image = VM05G002
image = VM05G003
image = VM05G004
```

Figure 23. Example of a snipl configuration file

Examples

The examples that follow assume that the configuration file of Figure 23 is used.

- The following command logs on two z/VM guest virtual machines, `sndlnx01` and `sndlnx03` (with alias `tutor`). In the example, the command output shows that `sndlnx03` is already logged on.

```
# snipl sndlnx01 sndlnx03 -V sandbox.www.example.com -z 44444 -u sndadm01 -p pw42play -a
Warning : No default configuration file could be found/opened.
* ImageActivate : Image sndlnx01 Request Successful
* ImageActivate : Image sndlnx03 Image Already Active
```

Assuming that the configuration file of Figure 23 on page 104 is available at `/etc/xcfg`, an equivalent command would be:

```
# snipl sndlnx01 tutor -a -f /etc/xcfg
Server sandbox.www.example.com from config file /etc/xcfg is used
* ImageActivate : Image sndlnx01 Request Successful
* ImageActivate : Image sndlnx03 Image Already Active
```

Assuming that the configuration file of Figure 23 on page 104 is used by default, an equivalent command would be:

```
# snipl sndlnx01 tutor -a
Server sandbox.www.example.com from config file /etc/snipl.conf is used
* ImageActivate : Image sndlnx01 Request Successful
* ImageActivate : Image sndlnx03 Image Already Active
```

- The following command performs an IPL for an LPAR `SZ01LP03`:

```
# snipl SZ01LP03 -L 192.0.2.4 -u sz01adm -l -P -A 5000
Enter password:
Warning : No default configuration file could be found/opened.
processing......
SZ01LP03: acknowledged.
```

Assuming that the configuration file of Figure 23 on page 104 is available at `/etc/xcfg`, an equivalent command would be:

```
# snipl SZ01LP03 -l -P -A 5000 -f /etc/xcfg
Enter password:
Server 192.0.2.4 from config file /etc/xcfg is used
SZ01LP03: acknowledged.
```

Assuming that the configuration file of Figure 23 on page 104 is used by default, an equivalent command would be:

```
# snipl SZ01LP03 -l -P -A 5000
Enter password:
Server 192.0.2.4 from config file /etc/snipl.conf is used
SZ01LP03: acknowledged.
```

- Assuming that the configuration file of Figure 23 on page 104 is available at `/etc/xcfg`, the following command lists the z/VM guest virtual machines as specified in the section for sandbox.www.example.com:

```
# snipl -V sandbox.www.example.com -f /etc/xcfg -x
available images for server sandbox.www.example.com and userid SNDADM01 :

        sndlnx01         sndlnx02         sndlnx03         sndlnx04
        sndlnx05         sndcms01
```

- The following command logs off a z/VM guest virtual machine:

```
# snipl vm04lnxd -V 2001:0db8::1a:0015 -z 77899 -u vm04main -p mainpw -d
Warning : No default configuration file could be found/opened.
processing......
* ImageDeactivate : Image vm04lnxd Request Successful
```

Assuming that the configuration file of Figure 23 on page 104 is used by default, an equivalent command would be:

```
# snipl vm04lnxd -d
Enter password:
Server 2001:0db8::1a:0015 from config file /etc/snipl.conf is used
processing......
* ImageDeactivate : Image vm04lnxd Request Successful
```

Connection errors and return codes

You might receive error indications from **snipl** or from the SE.

snipl return codes

Successful **snipl** commands return 0. If an error occurs, **snipl** writes a short message to `stderr` and completes with a return code other than 0.

The following return codes indicate **snipl** syntax errors or specifications that are not valid:

1 An unknown command option was specified.

2 A command option with an invalid value was specified.

3 A command option was specified more than once.

4 Conflicting command options was specified.

5 No command option was specified.

6 No SE, HMC, SMAPI request server or VSMSERVE service machine was specified on the command line or through a configuration file.

7 No LPAR or z/VM guest virtual machine was specified.

8 No z/VM user ID was specified on the command line or through a configuration file.

9 No password was specified on the command line or through a configuration file.

10 A specified LPAR or z/VM guest virtual machine does not exist on the specified SE or z/VM system.

22 More than one LPAR was specified for option `--dialog`.

The following return codes indicate setup errors or program errors:

30 An error occurred while loading one of the systems management API libraries `libhwmcaapi.so` or `libvmsmapi.so`.

40 Operation `--dialog` encounters a problem while starting another process.

41 Operation `--dialog` encounters a problem with `stdin` attribute setting.

50 A response from the HMC or SE could not be interpreted.

60 The response buffer is too small for a response from the HMC or SE.

90 A storage allocation failure occurred.

99 A program error occurred.

Connection errors

If a connection error occurs (for example, a timeout), **snipl** sends a message to stderr.

To recover connection errors, try again to issue the command. If the problem persists, a networking failure is most likely. In this case, increase the timeout value.

Return codes from the SE

Error messages from the SE have the format
`<LPAR_name>: <message> - rc is <rc>`

In the message, *<rc>* is a return code from the network management application programming interfaces (HWMCAAPI) on the SE.

Example

```
LPARLNX1: not acknowledged – command was not successful – rc is 135921664
```

To interpret these return codes, see *System z Application Programming Interfaces*, SB10-7030. You can obtain this publication from IBM Resource Link at www.ibm.com/servers/resourcelink.

STONITH support (snipl for STONITH)

The STONITH implementation is part of the Heartbeat framework of the High Availability Project.

STONITH is usually used as part of this framework but can also be used independently. **snipl** provides a plug-in to STONITH.

For a general description of the STONITH technology go to linux-ha.org.

Before you begin

- STONITH requires a configuration file that maps LPARs and z/VM guest virtual machines to the specifications for the corresponding SE, HMC or z/VM system. The **snipl** for STONITH configuration file has the same syntax as the **snipl** configuration file, see "The snipl configuration file" on page 101.
- The SEs, HMCs and z/VM systems you want to work with must be set up as described in "Setting up snipl for LPAR mode" on page 87 and "Setting up snipl for z/VM mode" on page 97.

Using stonith

When using **stonith** commands for Linux on z/VM or for Linux in LPAR mode you must provide *<keyword>=<value>* pairs as described in "The snipl configuration file" on page 101. There are two ways to specify this information:

- On the command line with the **stonith** command, using the **-p** option and the **snipl_parm** keyword.
- Through a configuration file, using the **-p** option and the **snipl_file** keyword.

Unlike **snipl**, you must specify all parameters in the same way; all parameters on the command line or all parameters in the configuration file.

On z/VM, you must use a configuration file containing a SSL fingerprint for an encrypted connection.

stonith syntax (simplified)

```
►►─stonith─ -t lic_vps─ -p─┬─ "snipl_param <parameters>"─┬──────────────►
                           └─ "snipl_file <file>"────────┘

►─ -T─┬─ on────┬─ <image>──────────────────────────────────────────────►◄
      ├─ off───┤
      └─reset──┘
```

Where:

-t *lic_vps*
specifies the "server type". For STONITH with **snipl**, the server type is always `lic_vps`.

-p specifies parameters.

snipl_param *<parameters>*
specifies comma-separated *<keyword>*=*<value>* pairs with the same keywords as used in the configuration file (see "The snipl configuration file" on page 101).

For LPAR mode the following keywords are required:

- server
- type
- user (or encryption=no)
- password
- image

For z/VM mode the following keywords are required:

- server
- port (required if the z/VM system is configured with a SMAPI request server rather than a VSMSERVE service machine)
- type
- user
- password
- image

snipl_file *<parameters>*
specifies a configuration file (see "The snipl configuration file" on page 101). The configuration file must contain all required keywords, including the password. The configuration file must always be specified explicitly. No file is used by default.

-T specifies the action to be performed.

-on
activates the specified LPAR or logs on the specified z/VM virtual machine.

-off
deactivates the specified LPAR or logs off the specified z/VM virtual machine.

-reset
resets the specified LPAR or z/VM virtual machine.

<image>
specifies the LPAR or z/VM virtual machine you want to work with. If you use the **snipl_param** parameter, the contained **image** keyword must specify the same LPAR or z/VM virtual machine.

For more information, see the **stonith** man page.

Examples

- This example command resets the z/VM guest virtual machine `sndlnx04`:

```
# stonith -t lic_vps -p "snipl_param server=sandbox.www.example.com,type=vm\
,user=sndadm01,password=pw42play,encryption=no,image=sndlnx04" -T reset sndlnx04
```

  Note: Instead of using the continuation sign (\) at the end of the first line, you can specify the complete command on a single line.

- With `/etc/xcfg` as shown in Example of a snipl configuration file, the following command is equivalent:

```
# stonith -t lic_vps -p "snipl_file /etc/xcfg" -T reset sndlnx04
```

Part 3. Storage

There are several z Systems specific storage device drivers for SUSE Linux Enterprise Server 12 SP3 for z Systems.

Newest version

You can find the newest version of this publication on IBM Knowledge Center at www.ibm.com/support/knowledgecenter/linuxonibm/liaaf/lnz_r_suse.html

Restrictions

For prerequisites and restrictions see the z Systems architecture specific information in the SUSE Linux Enterprise Server 12 SP3 release notes at www.suse.com/releasenotes

Chapter 9. DASD device driver

The DASD device driver provides access to all real or emulated direct access storage devices (DASD) that can be attached to the channel subsystem of an IBM mainframe.

DASD devices include various physical media on which data is organized in blocks or records or both. The blocks or records in a DASD can be accessed for read or write in random order.

Traditional DASD devices are attached to a control unit that is connected to a mainframe I/O channel. Today, these real DASD have been largely replaced by emulated DASDs. For example, such emulated DASDs can be the volumes of the IBM System Storage® DS8000® Turbo, or the volumes of the IBM System Storage DS6000™. These emulated DASD are completely virtual and the identity of the physical device is hidden.

SCSI disks that are attached through an FCP channel are not classified as DASD. They are handled by the zfcp driver (see Chapter 10, "SCSI-over-Fibre Channel device driver," on page 153).

Features

The DASD device driver supports a wide range of disk devices and disk functions.

- The DASD device driver has no dependencies on the adapter hardware that is used to physically connect the DASDs to the z Systems hardware. You can use any adapter that is supported by the z Systems hardware (see www.ibm.com/systems/z/connectivity for more information).
- The DASD device driver supports ESS virtual ECKD type disks
- The DASD device driver supports the control unit attached physical ECKD (Extended Count Key Data) and FBA (Fixed Block Access) devices as summarized in Table 16:

Table 16. Supported control unit attached DASD

Device format	Control unit type	Device type
ECKD	1750	3380 and 3390
ECKD	2107	3380 and 3390
ECKD	2105	3380 and 3390
ECKD	3990	3380 and 3390
ECKD	9343	9345
ECKD	3880	3390
FBA	6310	9336
FBA	3880	3370

All models of the specified control units and device types can be used with the DASD device driver. This includes large devices with more than 65520 cylinders, for example, 3390 Model A. Check the storage support statement to find out what works for SUSE Linux Enterprise Server 12 SP3.

- The DASD device driver provides a disk format with up to three partitions per disk. See "z Systems compatible disk layout" on page 115 for details.
- The DASD device driver provides an option for extended error reporting for ECKD devices. Extended error reporting can support high availability setups.
- The DASD device driver supports parallel access volume (PAV) and HyperPAV on storage devices that provide this feature. The DASD device driver handles dynamic PAV alias changes on storage devices. For more information about PAV and HyperPAV, see *How to Improve Performance with PAV*, SC33-8414. Use the **dasdstat** command to check whether a DASD uses PAV, see "Scenario: Verifying that PAV and HPF are used" on page 141.
- The DASD device driver supports High Performance FICON, including multitrack requests, on storage devices that provide this feature. Use the **dasdstat** command to check whether a DASD uses High Performance FICON, see "Scenario: Verifying that PAV and HPF are used" on page 141.

What you should know about DASD

The DASD device driver supports various disk layouts with different partitioning capabilities. The DASD device naming scheme helps you to keep track of your DASDs and DASD device nodes.

The IBM label partitioning scheme

Linux on z Systems supports the same standard DASD format that is also used by traditional mainframe operating systems, but it also supports any other Linux partition table.

The DASD device driver is embedded into the Linux generic support for partitioned disks. As a result, you can use any partition table format that is supported by Linux for your DASDs.

Traditional mainframe operating systems (such as, z/OS, z/VM, and z/VSE®) expect a standard DASD format. In particular, the format of the first two tracks of a DASD is defined by this standard. These tracks include the z Systems IPL, label, and for some layouts VTOC records. Partitioning schemes for platforms other than z Systems generally do not preserve these mainframe specific records.

SUSE Linux Enterprise Server 12 SP3 for z Systems includes the IBM label partitioning scheme that preserves the z Systems IPL, label, and VTOC records. With this partitioning scheme, Linux can share a disk with other mainframe operating systems. For example, a traditional mainframe operating system can handle backup and restore for a partition that is used by Linux.

The following sections describe the layouts that are supported by the IBM label partitioning scheme:

- "z Systems compatible disk layout" on page 115
- "Linux disk layout" on page 118
- "CMS disk layout" on page 118

DASD partitions

Partitioning DASD has the same advantages as for other disk types, but there are some prerequisites and a special tool, **fdasd**.

A DASD partition is a contiguous set of DASD blocks that is treated by Linux as an independent disk and by the traditional mainframe operating systems as a data set.

With the Linux disk layout (LDL) and the CMS disk layout, you always have a single partition only. This partition is defined by the LDL or CMS formatted area of the disk. With the compatible disk layout, you can have up to three partitions.

There are several reasons why you might want to have multiple partitions on a DASD, for example:

Limit data growth
: Runaway processes or undisciplined users can consume disk space to an extend that the operating system runs short of space for essential operations. Partitions can help to isolate the space that is available to particular processes.

Encapsulate your data
: If a file system gets damaged, this damage is likely to be restricted to a single partition. Partitioning can reduce the scope of data damage.

Recommendations

- Use **fdasd** to create or alter partitions on ECKD type DASD that are formatted with the compatible disk layout. If you use another partition editor, it is your responsibility to ensure that partitions do not overlap. If they do, data damage occurs.
- Leave no gaps between adjacent partitions to avoid wasting space. Gaps are not reported as errors, and can be reclaimed only by deleting and re-creating one or more of the surrounding partitions and rebuilding the file system on them.

A disk need not be partitioned completely. You can begin by creating only one or two partitions at the start of your disk and convert the remaining space to a partition later.

There is no facility for moving, enlarging, or reducing partitions, because **fdasd** has no control over the file system on the partition. You can only delete and re-create them. Changing the partition table results in loss of data in all altered partitions. It is up to you to preserve the data by copying it to another medium.

z Systems compatible disk layout

With the compatible disk layout, a DASD can have up to three partitions that can be accessed by traditional mainframe operating systems.

You can format only ECKD type DASD with the compatible disk layout.

Figure 24 illustrates a DASD with the compatible disk layout.

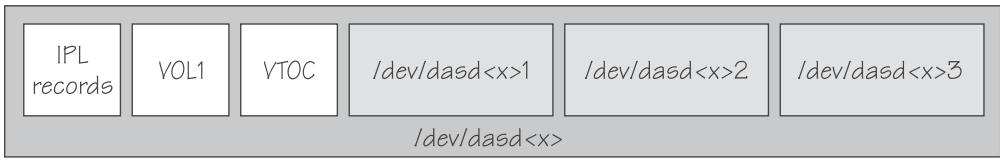

Figure 24. Compatible disk layout

The IPL records, volume label (VOL1), and VTOC of disks with the compatible disk layout are on the first two tracks of the disks. These tracks are not intended for use by Linux applications. Using the tracks can result in data loss.

Linux can address the device as a whole as `/dev/dasd<x>`, where <*x*> can be one to four letters that identify the individual DASD (see "DASD naming scheme" on page 119). See "DASD device nodes" on page 120 for alternative addressing possibilities.

Disks with the compatible disk layout can have one to three partitions. Linux addresses the first partition as `/dev/dasd<x>1`, the second as `/dev/dasd<x>2`, and the third as `/dev/dasd<x>3`.

You use the **dasdfmt** command (see "dasdfmt - Format a DASD" on page 543) to format a disk with the compatible disk layout. You use the **fdasd** command (see "fdasd – Partition a DASD" on page 562) to create and modify partitions.

Volume label

The volume label includes information about the disk layout, the VOLSER, and a pointer to the VTOC.

The DASD volume label is located in the third block of the first track of the device (cylinder 0, track 0, block 2). This block has a 4-byte key, and an 80-byte data area with the following content:

key
: for disks with the compatible disk layout, contains the four EBCDIC characters "VOL1" to identify the block as a volume label.

label identifier
: is identical to the key field.

VOLSER
: is a name that you can use to identify the DASD device. A volume serial number (VOLSER) can be one to six EBCDIC characters. If you want to use VOLSERs as identifiers for your DASD, be sure to assign unique VOLSERs.

  You can assign VOLSERs from Linux by using the **dasdfmt** or **fdasd** command. These commands enforce that VOLSERs:

  - Are alphanumeric
  - Are uppercase (by uppercase conversion)
  - Contain no embedded blanks
  - Contain no special characters other than $, #, @, and %

  Tip: Avoid special characters altogether.

  Note: The VOLSER values `SCRTCH`, `PRIVAT`, `MIGRAT`, or `L`*`nnnnn`* (An "L" followed by 5 digits) are reserved for special purposes by other mainframe operating systems and should not be used by Linux.

  These rules are more restrictive than the VOLSERs that are allowed by the traditional mainframe operating systems. For compatibility, Linux tolerates existing VOLSERs with lowercase letters and special characters other than $, #, @, and %. Enclose VOLSERs with special characters in single quotation marks if you must specify it, for example, as a command parameter.

VTOC address
contains the address of a standard IBM format 4 data set control block (DSCB). The format is: *cylinder* (2 bytes) *track* (2 bytes) *block* (1 byte).

All other fields of the volume label contain EBCDIC space characters (code 0x40).

VTOC

Instead of a regular Linux partition table, Linux on z Systems, like other mainframe operating systems, uses a Volume Table Of Contents (VTOC).

The VTOC contains pointers to the location of every data set on the volume. These data sets form the Linux partitions.

The VTOC is on the second track (cylinder 0, track 1). It contains a number of labels, each written in a separate block:

- One format 4 DSCB that describes the VTOC itself
- One format 5 DSCB

  The format 5 DSCB is required by other operating systems but is not used by Linux. **fdasd** sets it to zeros.
- For volumes with more than 65636 tracks, 1 format 7 DSCB following the format 5 DSCB
- For volumes with more than 65520 cylinders (982800 tracks), 1 format 8 DSCB following the format 5 DSCB
- A format 1 DSCB for each partition

  The key of the format 1 DSCB contains the data set name, which identifies the partition to z/OS, z/VM or z/VSE.

The VTOC can be displayed with standard z Systems tools such as VM/DITTO. A Linux DASD with physical device number 0x0193, volume label “LNX001”, and three partitions might be displayed like this example:

```
                          VM/DITTO DISPLAY VTOC                 LINE 1 OF 5
===>                                                          SCROLL ===> PAGE

CUU,193 ,VOLSER,LNX001   3390, WITH   100 CYLS, 15 TRKS/CYL, 58786 BYTES/TRK

--- FILE NAME --- (SORTED BY =,NAME  ,) ---- EXT    BEGIN-END     RELTRK,
1...5...10...15...20...25...30...35...40.... SQ   CYL-HD   CYL-HD      NUMTRKS
 *** VTOC EXTENT ***                          0     0  1     0  1      1,1
LINUX.VLNX001.PART0001.NATIVE                 0     0  2    46 11      2,700
LINUX.VLNX001.PART0002.NATIVE                 0    46 12    66 11    702,300
LINUX.VLNX001.PART0003.NATIVE                 0    66 12    99 14   1002,498
 *** THIS VOLUME IS CURRENTLY 100 PER CENT FULL WITH      0 TRACKS AVAILABLE

PF  1=HELP      2=TOP       3=END       4=BROWSE    5=BOTTOM    6=LOCATE
PF  7=UP        8=DOWN      9=PRINT    10=RGT/LEFT 11=UPDATE   12=RETRIEVE
```

The **ls** command on Linux might list this DASD and its partitions like this example:

```
# ls -l /dev/dasda*
brw-rw---- 1 root disk 94, 0 Jan 27 09:04 /dev/dasda
brw-rw---- 1 root disk 94, 1 Jan 27 09:04 /dev/dasda1
brw-rw---- 1 root disk 94, 2 Jan 27 09:04 /dev/dasda2
brw-rw---- 1 root disk 94, 3 Jan 27 09:04 /dev/dasda3
```

where `dasda` represent the whole DASD and `dasda1`, `dasda2`, and `dasda3` represent the individual partitions.

Linux disk layout

The Linux disk layout does not have a VTOC, and DASD partitions that are formatted with this layout cannot be accessed by traditional mainframe operating systems.

You can format only ECKD type DASD with the Linux disk layout. Apart from accessing the disks as ECKD devices, you can also access them using the DASD DIAG access method. See "Enabling the DASD device driver to use the DIAG access method" on page 130 for how to enable DIAG.

Figure 25 illustrates a disk with the Linux disk layout.

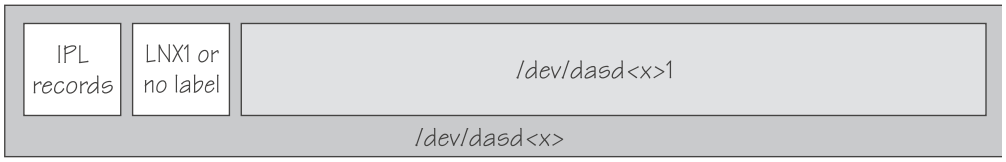

Figure 25. Linux disk layout

DASDs with the Linux disk layout either have an LNX1 label or are not labeled. The first records of the device are reserved for IPL records and the volume label, and are not intended for use by Linux applications. All remaining records are grouped into a single partition. You cannot have more than a single partition on a DASD that is formatted in the Linux disk layout.

Linux can address the device as a whole as `/dev/dasd<x>`, where `<x>` can be one to four letters that identify the individual DASD (see "DASD naming scheme" on page 119). Linux can access the partition as `/dev/dasd<x>1`.

You use the **dasdfmt** command (see "dasdfmt - Format a DASD" on page 543) to format a disk with the Linux disk layout.

CMS disk layout

The CMS disk layout applies only to Linux on z/VM. The disks are formatted with z/VM tools.

Both ECKD or FBA type DASD can have the CMS disk layout. DASD partitions that are formatted with this layout cannot be accessed by traditional mainframe operating systems. Apart from accessing the disks as ECKD or FBA devices, you can also access them using the DASD DIAG access method.

Figure 26 on page 119 illustrates two variants of the CMS disk layout.

Figure 26. CMS disk layout

The first variant contains IPL records, a volume label (CMS1), and a CMS data area. Linux treats DASD like this equivalent to a DASD with the Linux disk layout, where the CMS data area serves as the Linux partition.

The second variant is a CMS reserved volume. In this variant, the DASD was reserved by a `CMS RESERVE fn ft fm` command. In addition to the IPL records and the volume label, DASD with the CMS disk layout also have CMS metadata. The CMS reserved file serves as the Linux partition.

For both variants of the CMS disk layout, you can have only a single Linux partition. The IPL record, volume label and (where applicable) the CMS metadata, are not intended for use by Linux applications.

Addressing the device and partition is the same for both variants. Linux can address the device as a whole as `/dev/dasd<x>`, where *<x>* can be one to four letters that identify the individual DASD (see "DASD naming scheme"). Linux can access the partition as `/dev/dasd<x>1`.

"Enabling the DASD device driver to use the DIAG access method" on page 130 describes how to enable DIAG.

Disk layout summary

The available disk layouts differ in their support of device formats, the DASD DIAG access method, and the maximum number of partitions.

Table 17. Disk layout summary

Disk layout	ECKD device format	FBA device format	DIAG access method support (z/VM only)	Maximum number of partitions	Formatting tool
Compatible disk layout	Yes	No	No	3	**dasdfmt**
Linux disk layout	Yes	No	Yes	1	**dasdfmt**
CMS (z/VM only)	Yes	Yes	Yes	1	z/VM tools

DASD naming scheme

The DASD naming scheme maps device names and minor numbers to whole DASDs and to partitions.

The DASD device driver uses the major number 94. For each configured device it uses four minor numbers:

- The first minor number always represents the device as a whole, including IPL, VTOC, and label records.
- The remaining three minor numbers represent the up to three partitions.

With 1,048,576 (20-bit) available minor numbers, the DASD device driver can address 262,144 devices.

The DASD device driver uses a device name of the form dasd<*x*> for each DASD. In the name, <*x*> is one to four lowercase letters. Table 18 shows how the device names map to the available minor numbers.

Table 18. Mapping of DASD names to minor numbers

Name for device as a whole		**Minor number for device as a whole**		**Number of devices**
From	**To**	**From**	**To**	
dasda	dasdz	0	100	26
dasdaa	dasdzz	104	2804	676
dasdaaa	dasdzzz	2808	73108	17,576
dasdaaaa	dasdnwtl	73112	1048572	243,866
Total number of devices:				262,144

The DASD device driver also uses a device name for each partition. The name of the partition is the name of the device as a whole with a 1, 2, or 3 appended to identify the first, second, or third partition. The three minor numbers that follow the minor number of the device as a whole are the minor number for the first, second, and third partition.

Examples

- “dasda” refers to the whole of the first disk in the system and “dasda1”, “dasda2”, and “dasda3” to the three partitions. The minor number for the whole device is 0. The minor numbers of the partitions are 1, 2, and 3.
- “dasdz” refers to the whole of the 101st disk in the system and “dasdz1”, “dasdz2”, and “dasdz3” to the three partitions. The minor number for the whole device is 100. The minor numbers of the partitions are 101, 102, and 103.
- “dasdaa” refers to the whole of the 102nd disk in the system and “dasdaa1”, “dasdaa2”, and “dasdaa3” to the three partitions. The minor number for the whole device is 104. The minor numbers of the partitions are 105, 106, and 107.

DASD device nodes

SUSE Linux Enterprise Server 12 SP3 uses udev to create multiple device nodes for each DASD that is online.

Device nodes that are based on device names
udev creates device nodes that match the device names that are used by the kernel. These standard device nodes have the form `/dev/<name>`.

The mapping between standard device nodes and the associated physical disk space can change, for example, when you reboot Linux. To ensure that you access the intended physical disk space, you need device nodes that are based on properties that identify a particular DASD.

udev creates additional devices nodes that are based on the following information:

- The bus ID of the disk
- The disk label (VOLSER)
- The universally unique identifier (UUID) of the file system on the disk
- If available: The label of the file system on the disk

Device nodes that are based on bus IDs

udev creates device nodes of the form

`/dev/disk/by-path/ccw-<device_bus_id>`

for whole DASD and

`/dev/disk/by-path/ccw-<device_bus_id>-part<n>`

for the <*n*>th partition.

Device nodes that are based on VOLSERs

udev creates device nodes of the form

`/dev/disk/by-id/ccw-<volser>`

for whole DASD and

`/dev/disk/by-id/ccw-<volser>-part<n>`

for the <*n*>th partition.

If you want to use device nodes that are based on VOLSER, be sure that the VOLSERs in your environment are unique (see "Volume label" on page 116).

If you assign the same VOLSER to multiple devices, Linux can still access each device through its standard device node. However, only one of the devices can be accessed through the VOLSER-based device node. Thus, the node is ambiguous and might lead to unintentional data access.

Furthermore, if the VOLSER on the device that is addressed by the node is changed, the previously hidden device is not automatically addressed instead. To reassign the node, you must reboot Linux or force the kernel to reread the partition tables from disks, for example, by issuing:

```
# blockdev --rereadpt /dev/dasdzzz
```

You can assign VOLSERs to ECKD type devices with **dasdfmt** when formatting or later with **fdasd** when creating partitions.

Device nodes that are based on file system information

udev creates device nodes of the form

`/dev/disk/by-uuid/<uuid>`

where <*uuid*> is the UUID for the file system in a partition.

If a file system label exists, udev also creates a node of the form:

`/dev/disk/by-label/<label>`

There are no device nodes for the whole DASD that are based on file system information.

If you want to use device nodes that are based on file system labels, be sure that the labels in your environment are unique.

Additional device nodes

`/dev/disk/by-id` contains additional device nodes for the DASD and partitions, that are all based on a device identifier as contained in the `uid` attribute of the DASD.

Note: If you want to use device nodes that are based on file system information and VOLSER, be sure that they are unique for the scope of your Linux instance. This information can be changed by a user or it can be copied, for example when backup disks are created. If two disks with the same VOLSER or UUID are online to the same Linux instance, the matching device node can point to either of these disks.

Example

For a DASD that is assigned the device name dasdzzz, has two partitions, a device bus-ID 0.0.b100 (device number 0xb100), VOLSER LNX001, and a UUID 6dd6c43d-a792-412f-a651-0031e631caed for the first and f45e955d-741a-4cf3-86b1-380ee5177ac3 for the second partition, udev creates the following device nodes:

For the whole DASD:

- `/dev/dasdzzz` (standard device node according to the DASD naming scheme)
- `/dev/disk/by-path/ccw-0.0.b100`
- `/dev/disk/by-id/ccw-LNX001`

For the first partition:

- `/dev/dasdzzz1` (standard device node according to the DASD naming scheme)
- `/dev/disk/by-path/ccw-0.0.b100-part1`
- `/dev/disk/by-id/ccw-LNX001-part1`
- `/dev/disk/by-uuid/6dd6c43d-a792-412f-a651-0031e631caed`

For the second partition:

- `/dev/dasdzzz2` (standard device node according to the DASD naming scheme)
- `/dev/disk/by-path/ccw-0.0.b100-part2`
- `/dev/disk/by-id/ccw-LNX001-part2`
- `/dev/disk/by-uuid/f45e955d-741a-4cf3-86b1-380ee5177ac3`

Accessing DASD by udev-created device nodes

Use udev-created device nodes to access a particular physical disk space, regardless of the device name that is assigned to it.

Example

The following example is based on these assumptions:

- A DASD with bus ID 0.0.b100 has two partitions.
- The standard device node of the DASD is `dasdzzz`.
- udev creates the following device nodes for a DASD and its partitions:

```
/dev/disk/by-path/ccw-0.0.b100
/dev/disk/by-path/ccw-0.0.b100-part1
/dev/disk/by-path/ccw-0.0.b100-part2
```

Instead of issuing:

```
# fdasd /dev/dasdzzz
```

issue:

```
# fdasd /dev/disk/by-path/ccw-0.0.b100
```

In the file system information in `/etc/fstab` replace the following specifications:

```
/dev/dasdzzz1 /temp1 btrfs defaults 0 0
/dev/dasdzzz2 /temp2 btrfs defaults 0 0
```

with these specifications:

```
/dev/disk/by-path/ccw-0.0.b100-part1 /temp1 btrfs defaults 0 0
/dev/disk/by-path/ccw-0.0.b100-part2 /temp2 btrfs defaults 0 0
```

You can make similar substitutions with other device nodes that udev provides for you (see "DASD device nodes" on page 120).

Setting up the DASD device driver

Unless the DASD device driver modules are loaded for you during the boot process, load and configure them with the **modprobe** command.

In most cases, SUSE Linux Enterprise Server 12 SP3 loads the DASD device driver for you during the boot process. You can then use YaST to set the `diag` attribute. If the DASD device driver is loaded for you and you must set attributes other than `diag`, see "Module parameters" on page 28.

DASD module parameter syntax

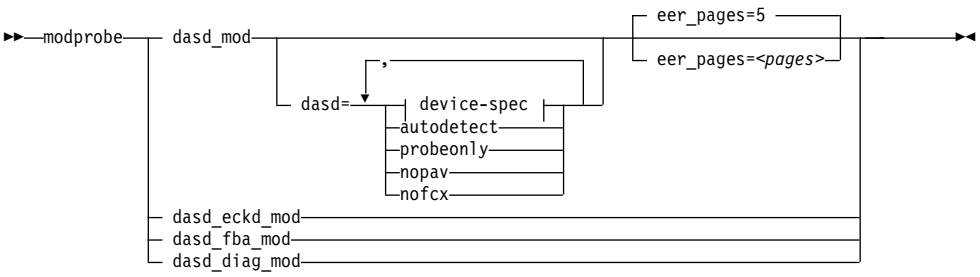

device-spec:

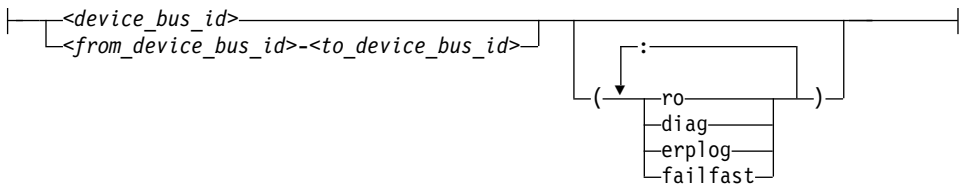

Where:

dasd_mod
loads the device driver base module.

When you are loading the base module, you can specify the `dasd=` parameter.

You can use the `eer_pages` parameter to determine the number of pages that are used for internal buffering of error records.

autodetect
causes the DASD device driver to allocate device names and the corresponding minor numbers to all DASD devices and set them online during the boot process. See "DASD naming scheme" on page 119 for the naming scheme.

The device names are assigned in order of ascending subchannel numbers. Auto-detection can yield confusing results if you change your I/O configuration and reboot, or if your Linux instance runs as a z/VM guest because the devices might appear with different names and minor numbers after rebooting.

probeonly
causes the DASD device driver to reject any "open" syscall with `EPERM`.

autodetect,probeonly
causes the DASD device driver to assign device names and minor numbers as for auto-detect. All devices regardless of whether they are accessible as DASD return `EPERM` to any "open" requests.

nopav suppresses parallel access volume (PAV and HyperPAV) enablement for Linux instances that run in LPAR mode. The **`nopav`** keyword has no effect for Linux on z/VM.

nofcx suppresses accessing the storage server with the I/O subsystem in transport mode (also known as High Performance FICON).

<device_bus_id>
specifies a single DASD.

<from_device_bus_id>-<to_device_bus_id>
specifies the first and last DASD in a range. All DASD devices with bus IDs in the range are selected. The device bus-IDs *<from_device_bus_id>* and *<to_device_bus_id>* need not correspond to actual DASD.

(ro) accesses the specified device or device range in read-only mode.

(diag) forces the device driver to access the device (range) with the DIAG access method.

(erplog)
enables enhanced error recovery processing (ERP) related logging through syslogd. If **`erplog`** is specified for a range of devices, the logging is switched on during device initialization.

(failfast)
immediately returns "failed" for an I/O operation when the last path to a DASD is lost.

Attention: Enable immediate failure of I/O requests only in setups where a failed I/O request can be recovered outside the scope of a single DASD (see "Enabling and disabling immediate failure of I/O requests" on page 134).

dasd_eckd_mod
loads the ECKD module.

dasd_fba_mod
loads the FBA module.

dasd_diag_mod
loads the DIAG module.

If you supply a DASD module parameter with device specifications `dasd=<device-list1>,<device-list2> ...`, the device names and minor numbers are assigned in the order in which the devices are specified. The names and corresponding minor numbers are always assigned, even if the device is not present, or not accessible. For information about including device specifications in a boot configuration, see "Including module parameters in a boot configuration" on page 29.

If you use **autodetect** in addition to explicit device specifications, device names are assigned to the specified devices first and device-specific parameters, like **ro**, are honored. The remaining devices are handled as described for **autodetect**.

The DASD base component is required by the other modules. Be sure that it is loaded first. **modprobe** takes care of this dependency for you and ensures that the base module is loaded automatically, if necessary.

Hint: modprobe might return before udev has created all device nodes for the specified DASDs. If you must assure that all nodes are present, for example in scripts, follow the **modprobe** command with:

```
# udevadm settle
```

For command details see the **modprobe** man page.

Example

```
modprobe dasd_mod dasd=0.0.7000-0.0.7002,0.0.7005(ro),0.0.7006
```

Table 19 shows the resulting allocation of device names:

Table 19. Example mapping of device names to devices

Name	To access
dasda	device 0.0.7000 as a whole
dasda1	the first partition on 0.0.7000
dasda2	the second partition on 0.0.7000
dasda3	the third partition on 0.0.7000
dasdb	device 0.0.7001 as a whole
dasdb1	the first partition on 0.0.7001
dasdb2	the second partition on 0.0.7001
dasdb3	the third partition on 0.0.7001
dasdc	device 0.0.7002 as a whole
dasdc1	the first partition on 0.0.7002
dasdc2	the second partition on 0.0.7002
dasdc3	the third partition on 0.0.7002
dasdd	device 0.0.7005 as a whole

Table 19. Example mapping of device names to devices (continued)

Name	To access
dasdd1	the first partition on 0.0.7005 (read-only)
dasdd2	the second partition on 0.0.7005 (read-only)
dasdd3	the third partition on 0.0.7005 (read-only)
dasde	device 0.0.7006 as a whole
dasde1	the first partition on 0.0.7006
dasde2	the second partition on 0.0.7006
dasde3	the third partition on 0.0.7006

Including the `nofcx` parameter suppresses High Performance FICON for all DASD:

```
modprobe dasd_mod dasd=nofcx,0.0.7000-0.0.7002,0.0.7005(ro),0.0.7006
```

Working with DASDs

You might have to prepare DASDs for use, configure troubleshooting functions, or configure special device features for your DASDs.

See "Working with newly available devices" on page 10 to avoid errors when you are working with devices that have become available to a running Linux instance.

- "Preparing an ECKD type DASD for use"
- "Preparing an FBA-type DASD for use" on page 128
- "Accessing DASD by force" on page 129
- "Enabling the DASD device driver to use the DIAG access method" on page 130
- "Using extended error reporting for ECKD type DASD" on page 131
- "Setting a DASD online or offline" on page 132
- "Enabling and disabling logging" on page 134
- "Enabling and disabling immediate failure of I/O requests" on page 134
- "Setting the timeout for I/O requests" on page 135
- "Working with DASD statistics in debugfs" on page 136
- "Accessing full ECKD tracks" on page 141
- "Handling lost device reservations" on page 143
- "Reading and resetting the reservation state" on page 144
- "Setting defective channel paths offline automatically" on page 145
- "Querying the HPF setting of a channel path" on page 147
- "Displaying DASD information" on page 148

Preparing an ECKD type DASD for use

Before you can use an ECKD type DASD as a Linux on z Systems disk, you must format it with a suitable disk layout and create a file system or define a swap space.

Before you begin

- The modules for the base component and the ECKD component of the DASD device driver must have been loaded.
- The DASD device driver must have recognized the device as an ECKD type device.

- You must know the device bus-ID for your DASD.

About this task

If you format the DASD with the compatible disk layout, you need to create one, two, or three partitions. You can then use your partitions as swap areas or to create a Linux file system.

Procedure

Perform these steps to prepare the DASD:

1. Issue **lsdasd** (see "lsdasd - List DASD devices" on page 594) to find out if the device is online. If necessary, set the device online using **chccwdev** (see "chccwdev - Set CCW device attributes" on page 500).

   Example:

   ```
   # chccwdev -e 0.0.b100
   ```

2. Format the device with the **dasdfmt** command (see "dasdfmt - Format a DASD" on page 543 for details). The formatting process can take hours for large DASDs. If you want to use the CMS disk layout, and your DASD is already formatted with the CMS disk layout, skip this step.

   Tips:
   - Use the largest possible block size, ideally 4096; the net capacity of an ECKD DASD decreases for smaller block sizes. For example, a DASD formatted with a block size of 512 byte has only half of the net capacity of the same DASD formatted with a block size of 4096 byte.
   - For DASDs that have previously been formatted with the `cdl` or `ldl` disk layout, use the **dasdfmt** quick format mode.
   - Use the **-p** option to display a progress bar.

   Example: Assuming that `/dev/dasdzzz` is a valid device node for 0.0.b100:

   ```
   # dasdfmt -b 4096 -p  /dev/dasdzzz
   ```

3. Proceed according to your chosen disk layout:
   - If you have formatted your DASD with the Linux disk layout or the CMS disk layout, skip this step and continue with step 4 on page 128. You already have one partition and cannot add further partitions on your DASD.
   - If you have formatted your DASD with the compatible disk layout use the **fdasd** command to create up to three partitions (see "fdasd – Partition a DASD" on page 562 for details).

     Example: To start the partitioning tool in interactive mode for partitioning a device `/dev/dasdzzz` issue:

     ```
     # fdasd /dev/dasdzzz
     ```

     If you create three partitions for a DASD `/dev/dasdzzz`, the device nodes for the partitions are `/dev/dasdzzz1`, `/dev/dasdzzz2`, and `/dev/dasdzzz3`.

Result: **fdasd** creates the partitions and updates the partition table (see "VTOC" on page 117).

4. Depending on the intended use of each partition, create a file system on the partition or define it as a swap space.
   - Either create a file system of your choice, for example, with the Linux **mke2fs** command (see the man page for details).

     Restriction: You must not make the block size of the file system smaller than the block size that was used for formatting the disk with the **dasdfmt** command.

     Tip: Use the same block size for the file system that was used for formatting.

     Example:

     ```
     # mke2fs -j -b 4096 /dev/dasdzzz1
     ```

   - Or define the partition as a swap space with the **mkswap** command (see the man page for details).
5. Mount each file system to the mount point of your choice in Linux and enable your swap partitions.

   Example: To mount a file system in a partition `/dev/dasdzzz1` to a mount point `/mnt` and to enable a swap partition `/dev/dasdzzz2` issue:

   ```
   # mount /dev/dasdzzz1 /mnt
   # swapon /dev/dasdzzz2
   ```

   If a block device supports barrier requests, journaling file systems like ext3 or raiser-fs can use this feature to achieve better performance and data integrity. Barrier requests are supported for the DASD device driver and apply to ECKD, FBA, and the DIAG discipline.

   Write barriers are used by file systems and are enabled as a file-system specific option. For example, barrier support can be enabled for an ext3 file system by mounting it with the option **-o barrier=1**:

   ```
   # mount -o barrier=1 /dev/dasdzzz1 /mnt
   ```

Preparing an FBA-type DASD for use

Before you can use an FBA-type DASD as a Linux on z Systems disk, you must create a file system or define a swap space.

Before you begin

- The modules for the base component and the FBA component of the DASD device driver must have been loaded.
- The DASD device driver must have recognized the device as an FBA device.
- You need to know the device bus-ID or the device node through which the DASD can be addressed.

About this task

Note: To access FBA devices, use the DIAG access method (see "Enabling the DASD device driver to use the DIAG access method" on page 130 for more information).

Perform these steps to prepare the DASD:

Procedure

1. Depending on the intended use of the partition, create a file system on it or define it as a swap space.
   - Either create a file system, for example, with the Linux **mke2fs** command (see the man page for details).

     Example:

     ```
     # mke2fs -b 4096 /dev/dasdzzy1
     ```

   - Or define the partition as a swap space with the **mkswap** command (see the man page for details).
2. Mount the file system to the mount point of your choice in Linux or enable your swap partition.

   Example: To mount a file system in a partition `/dev/dasdzzy1` issue:

   ```
   # mount /dev/dasdzzy1 /mnt
   ```

Accessing DASD by force

A Linux instance can encounter DASDs that are locked by another system.

Such a DASD is referred to as "externally locked" or "boxed". The Linux instance cannot analyze a DASD while it is externally locked.

About this task

To check whether a DASD has been externally locked, read its availability attribute. This attribute should be "good". If it is "boxed", the DASD has been externally locked. Because a boxed DASD might not be recognized as DASD, it might not show up in the device driver view in sysfs. If necessary, use the device category view instead (see "Device views in sysfs" on page 11).

CAUTION:
Breaking an external lock can have unpredictable effects on the system that holds the lock.

Procedure

1. Optional: To read the availability attribute of a DASD, issue a command of this form:

   ```
   # cat /sys/bus/ccw/devices/<device_bus_id>/availability
   ```

   Example: This example shows that a DASD with device bus-ID 0.0.b110 (device number 0xb110) has been externally locked.

   ```
   # cat /sys/bus/ccw/devices/0.0.b110/availability
   boxed
   ```

If the DASD is an ECKD type DASD and if you know the device bus-ID, you can break the external lock and set the device online. This means that the lock of the external system is broken with the "unconditional reserve" channel command.

2. To force a boxed DASD online, write `force` to the online device attribute. Issue a command of this form:

```
# echo force > /sys/bus/ccw/devices/<device_bus_id>/online
```

Example: To force a DASD with device number 0xb110 online issue:

```
# echo force > /sys/bus/ccw/devices/0.0.b110/online
```

Results

If the external lock is successfully broken or if the lock has been surrendered by the time the command is processed, the device is analyzed and set online. If it is not possible to break the external lock (for example, because of a timeout, or because it is an FBA-type DASD), the device remains in the boxed state. This command might take some time to complete.

For information about breaking the look of a DASD that has already been analyzed see "tunedasd - Adjust low-level DASD settings" on page 659.

Enabling the DASD device driver to use the DIAG access method

Linux on z/VM can use the DIAG access method to access DASDs with the help of z/VM functions.

Before you begin

This section only applies to Linux instances and DASD for which all of the following are true:

- The Linux instance runs as a z/VM guest.
- The device can be of type ECKD with either LDL or CMS disk layout, or it can be a device of type FBA.
- The module for the DIAG component must be loaded.
- The module for the component that corresponds to the DASD type (dasd_eckd_mod or dasd_fba_mod) must be loaded.
- The DASD is offline.
- The DASD does not represent a parallel access volume alias device.

About this task

You can use the DIAG access method to access both ECKD and FBA-type DASD. You use the device's `use_diag` sysfs attribute to enable or switch off the DIAG access method in a system that is online. Set the `use_diag` attribute to `1` to enable the DIAG access method. Set the `use_diag` attribute to `0` to switch off the DIAG access method (this is the default).

Alternatively, you can specify `diag` on the command line, for example during IPL, to force the device driver to access the device (range) with the DIAG access method.

Procedure

Issue a command of this form:

```
# echo <flag> > /sys/bus/ccw/devices/<device_bus_id>/use_diag
```

where <*device_bus_id*> identifies the DASD.
If the DIAG access method is not available and you set the `use_diag` attribute to `1`, you cannot set the device online (see "Setting a DASD online or offline" on page 132).

Note: When switching between an enabled and a disabled DIAG access method on FBA-type DASD, first reinitialize the DASD, for example, with CMS format or by overwriting any previous content. Switching without initialization might cause data-integrity problems.
For more details about DIAG see *z/VM CP Programming Services*, SC24-6179.

Example

In this example, the DIAG access method is enabled for a DASD with device number 0xb100.

1. Ensure that the driver is loaded:

   ```
   # modprobe dasd_diag_mod
   ```

2. Identify the sysfs CCW-device directory for the device in question and change to that directory:

   ```
   # cd /sys/bus/ccw/devices/0.0.b100/
   ```

3. Ensure that the device is offline:

   ```
   # echo 0 > online
   ```

4. Enable the DIAG access method for this device by writing '1' to the use_diag sysfs attribute:

   ```
   # echo 1 > use_diag
   ```

5. Use the online attribute to set the device online:

   ```
   # echo 1 > online
   ```

Using extended error reporting for ECKD type DASD

Control the extended error reporting feature for individual ECKD type DASD through the `eer_enabled` sysfs attribute. Use the character device of the extended error reporting module to obtain error records.

Before you begin

To use the extended error reporting feature, you need ECKD type DASD.

About this task

The extended error reporting feature is turned off by default.

Procedure

To enable extended error reporting, issue a command of this form:

```
# echo 1 > /sys/bus/ccw/devices/<device_bus_id>/eer_enabled
```

where `/sys/bus/ccw/devices/<device_bus_id>` represents the device in sysfs.
When it is enabled on a device, a specific set of errors generates records and might have further side effects.
To disable extended error reporting, issue a command of this form:

```
# echo 0 > /sys/bus/ccw/devices/<device_bus_id>/eer_enabled
```

What to do next

You can obtain error records for all DASD for which extended error reporting is enabled from the character device of the extended error reporting module, `/dev/dasd_eer`. The device supports these file operations:

open
: Multiple processes can open the node concurrently. Each process that opens the node has access to the records that are created from the time the node is opened. A process cannot access records that were created before the process opened the node.

close
: You can close the node as usual.

read
: Blocking read and non-blocking read are supported. When a record is partially read and then purged, the next read returns an I/O error -EIO.

poll
: The poll operation is typically used with non-blocking read.

Setting a DASD online or offline

Use the **chccwdev** command or the `online` sysfs attribute of the device to set DASDs online or offline.

About this task

When Linux boots, it senses your DASD. Depending on your specification for the "dasd=" parameter, it automatically sets devices online.

Procedure

Use the **chccwdev** command ("chccwdev - Set CCW device attributes" on page 500) to set a DASD online or offline.
Alternatively, you can write `1` to the device's online attribute to set it online or `0` to set it offline. In contrast to the sysfs attribute, the **chccwdev** command triggers a cio_settle for you and waits for the cio_settle to complete.
Outstanding I/O requests are canceled when you set a device offline. To wait

indefinitely for outstanding I/O requests to complete before setting the device offline, use the **chccwdev** option `--safeoffline` or the sysfs attribute `safe_offline`. When you set a DASD offline, the deregistration process is synchronous, unless the device is disconnected. For disconnected devices, the deregistration process is asynchronous.

Examples

- To set a DASD with device bus-ID 0.0.b100 online, issue:

```
# chccwdev -e 0.0.b100
```

  or

```
# echo 1 > /sys/bus/ccw/devices/0.0.b100/online
```

- To set a DASD with device bus-ID 0.0.b100 offline, issue:

```
# chccwdev -d 0.0.b100
```

  or

```
# echo 0 > /sys/bus/ccw/devices/0.0.b100/online
```

- To complete outstanding I/O requests and then set a DASD with device bus-ID 0.0.4711 offline, issue:

```
# chccwdev -s 0.0.4711
```

  or

```
# echo 1 > /sys/bus/ccw/devices/0.0.4711/safe_offline
```

  If an outstanding I/O request is blocked, the command might wait forever. Reasons for blocked I/O requests include reserved devices that can be released or disconnected devices that can be reconnected.

  1. Try to resolve the problem that blocks the I/O request and wait for the command to complete.
  2. If you cannot resolve the problem, issue **chccwdev -d** to cancel the outstanding I/O requests. The data is lost.

Dynamic attach and detach

You can dynamically attach devices to a running SUSE Linux Enterprise Server 12 SP3 for z Systems instance, for example, from z/VM.

When a DASD is attached, Linux attempts to initialize it according to the DASD device driver configuration. You can then set the device online. You can automate setting dynamically attached devices online by using CCW hotplug events (see "CCW hotplug events" on page 19).

Attention: Do not detach a device that is still being used by Linux. Detaching devices might cause the system to hang or crash. Ensure that you unmount a device and set it offline before you detach it.

See "Working with newly available devices" on page 10 to avoid errors when working with devices that have become available to a running Linux instance.

Be careful to avoid errors when working with devices that have become available to a running Linux instance.

Enabling and disabling logging

Use the `dasd=` module parameter or use the `erplog` sysfs attribute to enable or disable error recovery processing (ERP) logging.

Procedure

You can enable and disable error recovery processing (ERP) logging on a running system. There are two methods:

- Use the `dasd=` parameter when you load the base module of the DASD device driver.

  Example:

  To define a device range (0.0.7000-0.0.7005) and enable logging, change the parameter line to contain:

  ```
  dasd=0.0.7000-0.0.7005(erplog)
  ```

- Use the sysfs attribute `erplog` to disable ERP-related logging.

  Logging can be enabled for a specific device by writing `1` to the `erplog` attribute

  Example:

  ```
  echo 1 > /sys/bus/ccw/devices/<device_bus_id>/erplog
  ```

  To disable logging, write `0` to the `erplog` attribute, for example:

  Example:

  ```
  echo 0 > /sys/bus/ccw/devices/<device_bus_id>/erplog
  ```

Enabling and disabling immediate failure of I/O requests

Prevent devices in mirror setups from being blocked while paths are unavailable by making I/O requests fail immediately.

About this task

By default, a DASD that has lost all paths waits for one of the paths to recover. I/O requests are blocked while the DASD is waiting.

If the DASD is part of a mirror setup, this blocking might cause the entire virtual device to be blocked. You can use the failfast attribute to immediately return I/O requests as failed while no path to the device is available.

Attention: Use this attribute with caution and only in setups where a failed I/O request can be recovered outside the scope of a single DASD.

Procedure

Use one of these methods:

- You can enable immediate failure of I/O requests when you load the base module of the DASD device driver.

  Example:

  To define a device range (0.0.7000-0.0.7005) and enable immediate failure of I/O requests specify:

  `dasd=0.0.7000-0.0.7005(failfast)`

- You can use the sysfs attribute `failfast` of a DASD to enable or disable immediate failure of I/O requests.

  To enable immediate failure of I/O requests, write `1` to the `failfast` attribute.

  Example:

  ```
  echo 1 > /sys/bus/ccw/devices/<device_bus_id>/failfast
  ```

  To disable immediate failure of I/O requests, write `0` to the `failfast` attribute.

  Example:

  ```
  echo 0 > /sys/bus/ccw/devices/<device_bus_id>/failfast
  ```

Setting the timeout for I/O requests

DASD I/O requests can time out at two levels in the software stack.

About this task

When the DASD device driver receives an I/O request from an application, it issues one or more low-level I/O requests to the affected storage system. Both the initial I/O request from the application and the resulting low-level requests to the storage system can time out. You set the timeout values through two sysfs attributes of the DASD.

expires
: specifies the maximum time, in seconds, that the DASD device driver waits for a response to a low-level I/O request from a storage server.

  The default for the maximum response time depends on the type of DASD:

  ECKD uses the default that is provided by the storage server.

  FBA 300 s

  DIAG 50 s

  If the maximum response time is exceeded, the DASD device driver cancels the request. Depending on your setup, the DASD device driver might then try the request again, possibly in combination with other recovery actions.

timeout
: specifies the time interval, in seconds, within which the DASD device driver must respond to an I/O request from a software layer above it. If the specified time expires before the request is completed, the DASD device driver cancels all related low-level I/O requests to storage systems and reports the request as failed.

This setting is useful in setups where the software layer above the DASD device driver requires an absolute upper limit for I/O requests.

A value of `0` means that there is no time limit. This value is the default.

Procedure

You can use the `expires` and `timeout` attributes of a DASD to change the timeout values for that DASD.

1. To find out the current timeout values, issue commands of this form:

```
# cat /sys/bus/ccw/devices/<device_bus_id>/expires
# cat /sys/bus/ccw/devices/<device_bus_id>/timeout
```

Example:

```
# cat /sys/bus/ccw/devices/0.0.7008/expires
30
# cat /sys/bus/ccw/devices/0.0.7008/timeout
0
```

In the example, a maximum response time of 30 seconds applies to the storage server for a DASD with bus ID `0.0.7008`. No total time limit is set for I/O requests to this DASD.

2. To set different timeout values, issue commands of this form:

```
# echo <max_wait> > /sys/bus/ccw/devices/<device_bus_id>/expires
# echo <total_max> > /sys/bus/ccw/devices/<device_bus_id>/timeout
```

where:

<max_wait>
is the new maximum response time, in seconds, for the storage server. The value must be a positive integer.

<total_max>
is the new maximum total time in seconds. The value must be a positive integer or `0`. `0` disables this timeout setting.

<device_bus_id>
is the device bus-ID of the DASD.

Example:

```
# echo 60 > /sys/bus/ccw/devices/0.0.7008/expires
# echo 120 > /sys/bus/ccw/devices/0.0.7008/timeout
```

This example sets timeout values for a DASD with bus ID `0.0.7008`. The maximum response time for the storage server is set to 60 seconds and the overall time limit for I/O requests is set to 120 seconds.

Working with DASD statistics in debugfs

Gather DASD statistics and display the data with the **`dasdstat`** command.

Before you begin

- debugfs is required, but is mounted by default. If you unmounted the file system, remount it before continuing. See "debugfs" on page xiii.
- Instead of accessing raw DASD performance data in debugfs, you can use the **dasdstat** command to obtain more structured data (see "dasdstat - Display DASD performance statistics" on page 548).

About this task

The DASD performance data is contained in the following subdirectories of `<mountpoint>/dasd`, where *<mountpoint>* is the mount point of debugfs:

- A directory `global` that represents all available DASDs taken together.
- For each DASD, one directory with the name of the DASD block device with which the DASD is known to the DASD device driver (for example, `dasda`, `dasdb`, and `dasdc`).
- For each CCW device that corresponds to a DASD, a directory with the bus ID as the name.

  Block devices that are not set up for PAV or HyperPAV map to exactly one CCW device and the corresponding directories contain the same statistics.

  With PAV or HyperPAV, a bus ID can represent a base device or an alias device. Each base device is associated with a particular block device. The alias devices are not permanently associated with the same block device. At any one time, a DASD block device is associated with one or more CCW devices. Statistics that are based on bus ID, therefore, show more detail for PAV and HyperPAV setups.

Each of these directories contains a file `statistics` that you can use to perform these tasks:

- Start and stop data gathering.
- Reset statistics counters.
- Read statistics.

To control data gathering at the scope of a directory in `<mountpoint>/dasd`, issue a command of this form:

```
# echo <keyword> > <mountpoint>/dasd/<directory>/statistics
```

Where:

<directory>
: is one of the directories in `<mountpoint>/dasd`.

<keyword>
: specifies the action to be taken:

  on to start data gathering.

  off
  : to stop data gathering.

  reset
  : to reset the statistics counters.

To read performance data, issue a command of this form:

```
# cat <mountpoint>/dasd/<directory>/statistics
```

Examples for gathering and reading DASD statistics in debugfs

Use the **echo** command to start and stop data gathering for individual devices or across all DASDs. Use the **cat** command to access the raw performance data.

The following examples assume that debugfs is mounted at `/sys/kernel/debug`.

- To start data gathering for summary data across all available DASDs:

```
# echo on > /sys/kernel/debug/dasd/global/statistics
```

- To stop data gathering for block device `dasdb`:

```
# echo off > /sys/kernel/debug/dasd/dasdb/statistics
```

- To reset the counters for CCW device 0.0.b301:

```
# echo reset > /sys/kernel/debug/dasd/0.0.b301/statistics
```

- To read performance data for `dasda`, assuming that the degbugfs mount point is `/sys/kernel/debug`, issue:

```
# cat  /sys/kernel/debug/dasd/dasda/statistics
start_time 1283518578.085869197
total_requests 0
total_sectors 0
total_pav 0
total_hpf 0
histogram_sectors 0 0 0 0 0 0 0 0 0 0 0 0 0 0 0 0 0 0 0 0 0 0 0 0 0 0 0 0 0 0 0 0
histogram_io_times 0 0 0 0 0 0 0 0 0 0 0 0 0 0 0 0 0 0 0 0 0 0 0 0 0 0 0 0 0 0 0 0
histogram_io_times_weighted 0 0 0 0 0 0 0 0 0 0 0 0 0 0 0 0 0 0 0 0 0 0 0 0 0 0 0 0 0 0 0 0
histogram_time_build_to_ssch 0 0 0 0 0 0 0 0 0 0 0 0 0 0 0 0 0 0 0 0 0 0 0 0 0 0 0 0 0 0 0 0
histogram_time_ssch_to_irq 0 0 0 0 0 0 0 0 0 0 0 0 0 0 0 0 0 0 0 0 0 0 0 0 0 0 0 0 0 0 0 0
histogram_time_ssch_to_irq_weighted 0 0 0 0 0 0 0 0 0 0 0 0 0 0 0 0 0 0 0 0 0 0 0 0 0 0 0 0 0 0 0 0 0 0 0 0
histogram_time_irq_to_end 0 0 0 0 0 0 0 0 0 0 0 0 0 0 0 0 0 0 0 0 0 0 0 0 0 0 0 0 0 0 0 0
histogram_ccw_queue_length 0 0 0 0 0 0 0 0 0 0 0 0 0 0 0 0 0 0 0 0 0 0 0 0 0 0 0 0 0 0 0 0
total_read_requests 0
total_read_sectors 0
total_read_pav 0
total_read_hpf 0
histogram_read_sectors 0 0 0 0 0 0 0 0 0 0 0 0 0 0 0 0 0 0 0 0 0 0 0 0 0 0 0 0 0 0 0 0
histogram_read_times 0 0 0 0 0 0 0 0 0 0 0 0 0 0 0 0 0 0 0 0 0 0 0 0 0 0 0 0 0 0 0 0
histogram_read_time_build_to_ssch 0 0 0 0 0 0 0 0 0 0 0 0 0 0 0 0 0 0 0 0 0 0 0 0 0 0 0 0 0 0 0 0
histogram_read_time_ssch_to_irq 0 0 0 0 0 0 0 0 0 0 0 0 0 0 0 0 0 0 0 0 0 0 0 0 0 0 0 0 0 0 0 0
histogram_read_time_irq_to_end 0 0 0 0 0 0 0 0 0 0 0 0 0 0 0 0 0 0 0 0 0 0 0 0 0 0 0 0 0 0 0 0
histogram_read_ccw_queue_length 0 0 0 0 0 0 0 0 0 0 0 0 0 0 0 0 0 0 0 0 0 0 0 0 0 0 0 0 0 0 0 0
```

Interpreting the data rows

The raw DASD performance data in the `statistics` directories in debugfs is organized into labeled data rows.

This section explains the raw data in the individual data rows of the statistics. Use the **dasdstat** command to obtain more structured data.

start_time
: is the UNIX epoch time stamp when data gathering was started or when the counters were last reset.

  Tip: Use the **date** tool to convert the time stamp to a more readily human-readable format. See the **date** man page for details.

Single counters
: have a single integer as the statistics data. All rows with labels that begin with `total_` are of this data type.

  The following rows show data for the sum of all requests, read and write:

total_requests
is the number of requests that have been processed.

total_sectors
is the sum of the sizes of all requests, in units of 512-byte sectors.

total_pav
is the number of requests that were processed through a PAV alias device.

total_hpf
is the number of requests that used High Performance FICON.

The following rows show data for read requests only:

total_read_requests
is the number of read requests that have been processed.

total_read_sectors
is the sum of the sizes of all read requests, in units of 512-byte sectors.

total_read_pav
is the number of read requests that were processed through a PAV alias device.

total_read_hpf
is the number of read requests that used High Performance FICON.

Linear histograms
have a series of 32 integers as the statistics data. The integers represent a histogram, with a linear scale, of the number of requests in the request queue each time a request has been queued. The first integer shows how often the request queue contained zero requests, the second integer shows how often the queue contained one request, and the n-th value shows how often the queue contained n-1 requests.

histogram_ccw_queue_length
is the histogram data for all requests, read and write.

histogram_read_ccw_queue_length
is the histogram data for read requests only.

Logarithmic histograms
have a series of 32 integers as the statistics data. The integers represent a histogram with a logarithmic scale:

- The first integer always represents all measures of fewer than 4 units
- The second integer represents measures of 4 or more but less than 8 units
- The third integer represents measures of 8 or more but less than 16 units
- The n-th integer ($1 < n < 32$) represents measures of 2^n or more but less than 2^{n+1} units
- The 32nd integer represents measures of 2^{32} (= 4G = 4,294,967,296) units or more.

The following rows show data for the sum of all requests, read and write:

histogram_sectors
is the histogram data for request sizes. A unit is a 512-byte sector.

histogram_io_times
is the histogram data for the total time that is needed from creating the cqr to its completion in the DASD device driver and return to the block layer. A unit is a microsecond.

histogram_io_times_weighted
is the histogram data of the total time, as measured for `histogram_io_times`, devided by the requests size in sectors. A unit is a microsecond per sector.

This metric is deprecated and there is no corresponding histogram data for read requests.

histogram_time_build_to_ssch
is the histogram data of the time that is needed from creating the cqr to submitting the request to the subchannel. A unit is a microsecond.

histogram_time_ssch_to_irq
is the histogram data of the time that is needed from submitting the request to the subchannel until an interrupt indicates that the request has been completed. A unit is a microsecond.

histogram_time_ssch_to_irq_weighted
is the histogram data of the time that is needed from submitting the request to the subchannel until an interrupt indicates that the request has been completed, divided by the request size in 512-byte sectors. A unit is a microsecond per sector.

This metric is deprecated and there is no corresponding histogram data for read requests.

histogram_time_irq_to_end
is the histogram data of the time that is needed from return of the request from the channel subsystem, until the request is returned to the block layer. A unit is a microsecond.

The following rows show data for read requests only:

histogram_read_sectors
is the histogram data for read request sizes. A unit is a 512-byte sector.

histogram_read_io_times
is the histogram data, for read requests, for the total time that is needed from creating the cqr to its completion in the DASD device driver and return to the block layer. A unit is a microsecond.

histogram_read_time_build_to_ssch
is the histogram data, for read requests, of the time that is needed from creating the cqr to submitting the request to the subchannel. A unit is a microsecond.

histogram_read_time_ssch_to_irq
is the histogram data, for read requests, of the time that is needed from submitting the request to the subchannel until an interrupt indicates that the request has been completed. A unit is a microsecond.

histogram_read_time_irq_to_end
is the histogram data, for read requests, of the time that is needed

from return of the request from the channel subsystem, until the request is returned to the blocklayer. A unit is a microsecond.

Scenario: Verifying that PAV and HPF are used

Use the **dasdstat** command to display DASD performance statistics, including statistics about Parallel Access Volume (PAV) and High Performance FICON (HPF).

Procedure

1. Enable DASD statistics for the device of interest.

   Example:

   ```
   # dasdstat -e dasdc
   enable statistic "/sys/kernel/debug/dasd/dasdc/statistics"
   ```

2. Assure that I/O requests are directed to the device.

   Hints:

   - Access a partition, rather than the whole device, to avoid directing the I/O request towards the first 2 tracks of a CDL formatted DASD. Requests to the first 2 tracks of a CDL formatted DASD are exceptional in that they never use High Performance FICON.
   - Assure that a significant I/O load is applied to the device. PAV aliases are used only if multiple I/O requests for the device are processed simultaneously.

   Example:

   ```
   # dd if=/dev/dasdc1 of=/dev/null bs=4k count=256
   ```

3. Look for PAV and HPF in the statistics.

   Example:

   ```
   # dasdstat dasdc
   --------------------------------------------------------------------------------
   statistics data for statistic: dasdc
   start time of data collection: Fri Dec 11 14:22:18 CET 2015

   7 dasd I/O requests
   with 4000 sectors(512B each)
   3 requests used a PAV alias device
   7 requests used HPF
   ```

   In the example, `dasdc` uses both Parallel Access Volume and High Performance FICON.

Accessing full ECKD tracks

In raw-track access mode, the DASD device driver accesses full ECKD tracks, including record zero and the count and key data fields.

Before you begin

- This section applies to ECKD type DASD only.
- The DASD has to be offline when you change the access mode.
- The DIAG access method must not be enabled for the device.

About this task

With this mode, Linux can access an ECKD device regardless of the track layout. In particular, the device does not need to be formatted for Linux.

For example, with raw-track access mode Linux can create a backup copy of any ECKD device. Full-track access can also enable a special program that runs on Linux to access and process data on an ECKD device that is not formatted for Linux.

By default, the DASD device driver accesses only the data fields of ECKD devices. In default access mode, you can work with partitions, file systems, and files in the file systems on the DASD.

When using a DASD in raw-track access mode be aware that:

- In memory, each track is represented by 64 KB of data, even if the track occupies less physical disk space. Therefore, a disk in raw-track access mode appears bigger than in default mode.
- Programs must read or write data in multiples of complete 64 KB tracks. The minimum is a single track. The maximum is eight tracks by default but can be extended to up to 16 tracks.

  The maximum number of tracks depends on the maximum number of sectors as specified in the `max_sectors_kb` sysfs attribute of the DASD. This attribute is located in the block device branch of sysfs at `/sys/block/dasd<x>/queue/max_sectors_kb`. In the path, `dasd<x>` is the device name that is assigned by the DASD device driver.

  To extend the maximum beyond eight tracks, set the `max_sectors_kb` to the maximum amount of data to be processed in a single read or write operation. For example, to extend the maximum to reading or writing 16 tracks at a time, set `max_sectors_kb` to `1024` (16 x 64).
- Programs must write only valid ECKD tracks of 64 KB.
- Programs must use direct I/O to prevent the Linux block layer from splitting tracks into fragments. Open the block device with option O_DIRECT or work with programs that use direct I/O.

  For example, the options `iflag=direct` and `oflag=direct` cause **dd** to use direct I/O. When using **dd**, also specify the block size with the `bs=` option. The block size determines the number of tracks that are processed in a single I/O operation. The block size must be a multiple of 64 KB and can be up to 1024 KB. Specifying a larger block size often results in better performance. If you receive disk image data from a pipe, also use the option `iflag=fullblock` to ensure that full blocks are written to the DASD device.

  Tools cannot directly work with partitions, file systems, or files within a file system. For example, **fdasd** and **dasdfmt** cannot be used.

Procedure

To change the access mode, issue a command of this form:

```
# echo <switch> > /sys/bus/ccw/devices/<device_bus_id>/raw_track_access
```

where:

<switch>
: is 1 to activate raw data access and 0 to deactivate raw data access.

<device_bus_id>
identifies the DASD.

Example

The following example creates a backup of a DASD `0.0.7009` on a DASD `0.0.70a1`.

The initial commands ensure that both devices are offline and that the DIAG access method is not enabled for either of them. The subsequent commands activate the raw-track access mode for the two devices and set them both online. The **lsdasd** command that follows shows the mapping between device bus-IDs and device names.

The **dd** command for the copy operation specifies direct I/O for both the input and output device and the block size of 1024 KB. After the copy operation is completed, both devices are set offline. The access mode for the original device then is set back to the default and the device is set back online.

```
#cat /sys/bus/ccw/devices/0.0.7009/online
1
# chccwdev -d 0.0.7009
# cat /sys/bus/ccw/devices/0.0.7009/use_diag
0
# cat /sys/bus/ccw/devices/0.0.70a1/online
0
# cat /sys/bus/ccw/devices/0.0.70a1/use_diag
0
# echo 1 > /sys/bus/ccw/devices/0.0.7009/raw_track_access
# echo 1 > /sys/bus/ccw/devices/0.0.70a1/raw_track_access
# chccwdev -e 0.0.7009,0.0.70a1
# lsdasd 0.0.7009 0.0.70a1
Bus-ID     Status      Name      Device  Type  BlkSz  Size      Blocks
==============================================================================
0.0.7009   active      dasdf     94:20   ECKD  4096   7043MB    1803060
0.0.70a1   active      dasdj     94:36   ECKD  4096   7043MB    1803060
# echo 1024 > /sys/block/dasdf/queue/max_sectors_kb
# echo 1024 > /sys/block/dasdj/queue/max_sectors_kb
# dd if=/dev/dasdf of=/dev/dasdj bs=1024k iflag=direct oflag=direct
# chccwdev -d 0.0.7009,0.0.70a1
# echo 0 > /sys/bus/ccw/devices/0.0.7009/raw_track_access
# chccwdev -e 0.0.7009
```

Handling lost device reservations

A DASD reservation by your Linux instance can be lost if another system unconditionally reserves this DASD.

About this task

This other system then has exclusive I/O access to the DASD for the duration of the unconditional reservation. Such unconditional reservations can be useful for handling error situations where:

- Your Linux instance cannot gracefully release the DASD.
- Another system requires access to the DASD, for example, to perform recovery actions.

After the DASD is released by the other system, your Linux instance might process pending I/O requests and write faulty data to the DASD. How to prevent pending I/O requests from being processed depends on the reservation policy. There are two reservation policies:

ignore All I/O operations for the DASD are blocked until the DASD is released by the second system. When using this policy, reboot your Linux instance before the other system releases the DASD. This policy is the default.

fail All I/O operations are returned as failed until the DASD is set offline or until the reservation state is reset. When using this policy, set the DASD offline and back online after the problem has been resolved. See "Reading and resetting the reservation state" about resetting the reservation state to resume operations.

Procedure

Set the reservation policy with a command of this form:

```
# echo <policy> > /sys/bus/ccw/devices/<device_bus_id>/reservation_policy
```

where:

<device_bus_id>
specifies the DASD.

<policy>
is one of the available policies, `ignore` or `fail`.

Examples

- The command of this example sets the reservation policy for a DASD with bus ID `0.0.7009` to `fail`.

```
# echo fail > /sys/bus/ccw/devices/0.0.7009/reservation_policy
```

- This example shows a small scenario. The first two commands confirm that the reservation policy of the DASD is `fail` and that the reservation has been lost to another system. Assuming that the error that had occurred has already been resolved and that the other system has released the DASD, operations with the DASD are resumed by setting it offline and back online.

```
# cat /sys/bus/ccw/devices/0.0.7009/reservation_policy
fail
# cat /sys/bus/ccw/devices/0.0.7009/last_known_reservation_state
lost
# chccwdev -d 0.0.7009
# chccwdev -e 0.0.7009
```

Reading and resetting the reservation state

How the DASD device driver handles I/O requests depends on the `last_known_reservation_state` sysfs attribute of the DASD.

About this task

The `last_known_reservation_state` attribute reflects the reservation state as held by the DASD device driver and can differ from the actual reservation state. Use the **`tunedasd -Q`** command to find out the actual reservation state. The `last_known_reservation_state` sysfs attribute can have the following values:

none The DASD device driver has no information about the device reservation

state. I/O requests are processed as usual. If the DASD is reserved by another system, the I/O requests remain in the queue until they time out, or until the reservation is released.

reserved
The DASD device driver holds a valid reservation for the DASD and I/O requests are processed as usual. The DASD device driver changes this state if notified that the DASD is no longer reserved to this system. The new state depends on the reservation policy (see "Handling lost device reservations" on page 143).

ignore The state is changed to `none`.

fail The state is changed to `lost`.

lost The DASD device driver had reserved the DASD, but subsequently another system has unconditionally reserved the DASD (see "Handling lost device reservations" on page 143). The device driver processes only requests that query the actual device reservation state. All other I/O requests for the device are returned as failed.

When the error that led another system to unconditionally reserve the DASD is resolved and the DASD has been released by this other system there are two methods for resuming operations:

- Setting the DASD offline and back online.
- Resetting the reservation state of the DASD.

Attention: Do not resume operations by resetting the reservation state unless your system setup maintains data integrity on the DASD despite:

- The I/O errors that are caused by the unconditional reservation
- Any changes to the DASD through the other system

You reset the reservation state by writing `reset` to the `last_known_reservation_state` sysfs attribute of the DASD. Resetting is possible only for the `fail` reservation policy (see "Handling lost device reservations" on page 143) and only while the value of the `last_known_reservation_state` attribute is `lost`.

To find out the reservation state of a DASD issue a command of this form:

```
# cat /sys/bus/ccw/devices/<device_bus_id>/last_known_reservation_state
```

where <*device_bus_id*> specifies the DASD.

Example

The command in this example queries the reservation state of a DASD with bus ID `0.0.7009`.

```
# cat /sys/bus/ccw/devices/0.0.7009/last_known_reservation_state
reserved
```

Setting defective channel paths offline automatically

Control the removal of a defective channel path through the `path_threshold` and `path_interval` sysfs attributes. If a channel path does not work correctly, it is removed from normal operation if other channel paths are available.

About this task

A channel control check (CCC) is caused by any machine malfunction that affects channel-subsystem controls. An interface control check (IFCC) indicates that an incorrect signal occurred on the channel path. Usually, these errors can be recovered automatically. However, if IFCC or CCC errors occur frequently on a particular channel path, these errors indicate a failure of this channel path. Such a failure leads to performance degradation due to error recovery processing. If other channel paths are available, it might help the overall device performance to exclude the malfunctioning channel path from I/O.

The channel-path error recovery feature applies to devices for which multiple channel paths are operational. By default, the error threshold is 256 and the reset interval is 300 s (5 minutes). Accordingly, a channel path is set offline when the error count has reached 256. If 300 seconds elapse without an error the error count is reset to 0.

You can set different values through the `path_threshold` and `path_interval` sysfs attributes of the device.

Procedure

To exclude a channel path from I/O after a certain number of IFCC or CCC errors within a certain time frame, specify both `path_threshold` and `path_interval`.

1. To specify the number of errors that must occur before the channel path is taken offline, issue a command of this form:

   ```
   # echo <no_of_errors> > /sys/bus/ccw/devices/<device_bus_id>/path_threshold
   ```

   where `/sys/bus/ccw/devices/<device_bus_id>` represents the device in sysfs.
2. To specify the time that must elapse without errors for the counter to be reset, issue a command of this form:

   ```
   # echo <time> > /sys/bus/ccw/devices/<device_bus_id>/path_interval
   ```

Example

Setting 512 for threshold and 5 minutes (300s) for interval:

```
echo 512 > /sys/bus/ccw/devices/0.0.4711/path_threshold
echo 300 > /sys/bus/ccw/devices/0.0.4711/path_interval
```

This example leads to a deactivation of the channel path after 512 IFCCs or CCCs. When 5 minutes (300s) have passed without IFCCs or CCCs after the last error and the path was not disabled, the counter is reset.

What to do next

After you repair the faulty channel path, set it online again by using the **tunedasd** command with the `-p` option. See “tunedasd - Adjust low-level DASD settings” on page 659 for details.

Querying the HPF setting of a channel path

Query the High Performance Ficon (HPF) state of a channel path through the `hpf` sysfs attribute. The HPF function can be lost if the device cannot provide the function, or if the channel path is not able to do HPF.

About this task

The HPF channel-path is deactivated if an HPF error occurs indicating that HPF is not available if there are other channel paths available. If no other channel paths are available, the path remains operational with HPF deactivated.

If the device loses HPF functionality, HPF is disabled for all channel paths defined for the device.

Procedure

High Performance FICON for a device is available if the `hpf` sysfs attribute is 1, and unavailable otherwise.

To query the HPF function for a channel path, issue a command of this form:

```
# lsdasd -l <device_bus_id>
```

Alternatively, you can query the sysfs attribute directly:

```
# cat /sys/bus/ccw/devices/<device_bus_id>/hpf
```

where `/sys/bus/ccw/devices/<device_bus_id>` represents the device in sysfs.

Example

To query the availability of HPF for a device 0.0.4711, issue:

```
lsdasd -l 0.0.4711

0.0.4711/dasdc/94:8
  status:                          active
  type:                            ECKD
  ...                              ...
  hpf:                             1
```

This example indicates that HPF is enabled for the device.

Alternatively, read from the `hpf` sysfs attribute:

```
cat /sys/bus/ccw/devices/0.0.4712/hpf
0
```

This example indicates that HPF is disabled for device 0.0.4712.

What to do next

You can now reset the paths to the device. You can use the **tunedasd** command to reset all or one channel path.

To re-validate all paths for one device and if possible reset HPF:

```
# tunedasd --path_reset_all /dev/dasdc
Resetting all chpids for device </dev/dasdc>...
Done.
```

See "tunedasd - Adjust low-level DASD settings" on page 659 for details.

You can also use sysfs to reset a path. sysfs expects a path mask. For example to reset CHPID 44, you can use **tunedasd**:

```
tunedasd -p 44 /dev/dasde
```

This would be the same as specifying the following in sysfs:

```
echo 08 > /sys/bus/ccw/devices/0.0.9330/path_reset
```

Both commands will reset CHPID 44 (path mask 08).

Displaying DASD information

Use tools to display information about your DASDs, or read the attributes of the devices in sysfs.

About this task

There are several methods to display DASD information:

- Use **lsdasd -l** (see "lsdasd - List DASD devices" on page 594) to display summary information about the device settings and the device geometry of multiple DASDs.
- Use **dasdview** (see "dasdview - Display DASD structure" on page 551) to display details about the contents of a particular DASD.
- Read information about a particular DASD from sysfs, as described in this section.

The sysfs representation of a DASD is a directory of the form `/sys/bus/ccw/devices/<device_bus_id>`, where *<device_bus_id>* is the bus ID of the DASD. This sysfs directory contains a number of attributes with information about the DASD.

Table 20. Attributes with DASD information

Attribute	Explanation
alias	1 if the DASD is a parallel access volume (PAV) alias device. `0` if the DASD is a PAV base device or has not been set up as a PAV device. For an example of how to use PAV see *How to Improve Performance with PAV*, SC33-8414 on developerWorks at www.ibm.com/developerworks/linux/linux390/documentation_suse.html This attribute is read-only.
discipline	Indicates the base discipline, ECKD or FBA, that is used to access the DASD. If DIAG is enabled, this attribute might read DIAG instead of the base discipline. This attribute is read-only.
eer_enabled	1 if the DASD is enabled for extended error reporting, `0` if it is not enabled (see "Using extended error reporting for ECKD type DASD" on page 131).

Table 20. Attributes with DASD information (continued)

Attribute	Explanation
erplog	`1` if error recovery processing (ERP) logging is enabled, `0` if ERP logging is not enabled (see "Enabling and disabling logging" on page 134).
expires	Indicates the time, in seconds, that the DASD device driver waits for a response to an I/O request from a storage server. If this time expires, the device driver considers a request as failed and cancels it (see "Setting the timeout for I/O requests" on page 135).
failfast	`1` if I/O operations are returned as failed immediately when the last path to the DASD is lost. `0` if a wait period for a path to return expires before an I/O operation is returned as failed. (see "Enabling and disabling immediate failure of I/O requests" on page 134).
last_known_reservation_state	The reservation state as held by the DASD device driver. Values can be: **none** The DASD device driver has no information about the device reservation state. **reserved** The DASD device driver holds a valid reservation for the DASD. **lost** The DASD device driver had reserved the device, but this reservation has been lost to another system. See "Reading and resetting the reservation state" on page 144 for details.
online	`1` if the DASD is online, `0` if it is offline (see "Setting a DASD online or offline" on page 132).
raw_track_access	`1` if the DASD is in raw-track access mode, `0` if it is in default access mode (see "Accessing full ECKD tracks" on page 141).
readonly	`1` if the DASD is read-only, `0` if it can be written to. This attribute is a device driver setting and does not reflect any restrictions that are imposed by the device itself. This attribute is ignored for PAV alias devices.
reservation_policy	Shows the reservation policy of the DASD. Possible values are `ignore` and `fail`. See "Handling lost device reservations" on page 143 for details.
status	Reflects the internal state of a DASD device. Values can be: **`unknown`** Device detection has not started yet. **`new`** Detection of basic device attributes is in progress. **`detected`** Detection of basic device attributes has finished. **`basic`** The device is ready for detecting the disk layout. Low-level tools can set a device to this state when changing the disk layout, for example, when formatting the device. **`unformatted`** The disk layout detection found no valid disk layout. The device is ready for use with low-level tools like **`dasdfmt`**. **`ready`** The device is in an intermediate state. **`online`** The device is ready for use.

Table 20. Attributes with DASD information (continued)

Attribute	Explanation
timeout	Indicates the time, in seconds, within which the DASD device driver must respond to an I/O request from a software layer above it. If the specified time expires before the request is completed, the DASD device driver cancels all related low-level I/O requests to storage systems and reports the request as failed (see "Setting the timeout for I/O requests" on page 135).
uid	A device identifier of the form *<vendor>.<serial>.<subsystem_id>.<unit_address>.<minidisk_identifier>* where ***<vendor>*** is the specification from the vendor attribute. ***<serial>*** is the serial number of the storage system. ***<subsystem_id>*** is the ID of the logical subsystem to which the DASD belongs on the storage system. ***<unit_address>*** is the address that is used within the storage system to identify the DASD. ***<minidisk_identifier>*** is an identifier that the z/VM system assigns to distinguish between minidisks on the DASD. This part of the uid is only present for Linux on z/VM and if the z/VM version and service level support this identifier. This attribute is read-only.
use_diag	1 if the DIAG access method is enabled, `0` if the DIAG access method is not enabled (see "Enabling the DASD device driver to use the DIAG access method" on page 130). Do not enable the DIAG access method is for PAV alias devices.
vendor	Identifies the manufacturer of the storage system that contains the DASD. This attribute is read-only.

There are some more attributes that are common to all CCW devices (see "Device attributes" on page 9).

Procedure

Issue a command of this form to read an attribute:

```
# cat /sys/bus/ccw/devices/<device_bus_id>/<attribute>
```

where *<attribute>* is one of the attributes of Table 20 on page 148.

Example

The following sequence of commands reads the attributes for a DASD with a device bus-ID 0.0.b100:

```
# cat /sys/bus/ccw/devices/0.0.b100/alias
0
# cat /sys/bus/ccw/devices/0.0.b100/discipline
ECKD
# cat /sys/bus/ccw/devices/0.0.b100/eer_enabled
0
# cat /sys/bus/ccw/devices/0.0.b100/erplog
0
# cat /sys/bus/ccw/devices/0.0.b100/expires
30
# cat /sys/bus/ccw/devices/0.0.b100/failfast
0
# cat /sys/bus/ccw/devices/0.0.b100/last_known_reservation_state
reserved
# cat /sys/bus/ccw/devices/0.0.b100/online
1
# cat /sys/bus/ccw/devices/0.0.b100/raw_track_access
0
# cat /sys/bus/ccw/devices/0.0.b100/readonly
1
# cat /sys/bus/ccw/devices/0.0.b100/reservation_policy
ignore
# cat /sys/bus/ccw/devices/0.0.b100/status
online
# cat /sys/bus/ccw/devices/0.0.b100/timeout
120
# cat /sys/bus/ccw/devices/0.0.b100/uid
IBM.75000000092461.e900.8a
# cat /sys/bus/ccw/devices/0.0.b100/use_diag
1
# cat /sys/bus/ccw/devices/0.0.b100/vendor
IBM
```

Chapter 10. SCSI-over-Fibre Channel device driver

The SCSI-over-Fibre Channel device driver for Linux on z Systems (zfcp device driver) supports virtual QDIO-based z Systems SCSI-over-Fibre Channel adapters (FCP devices) and attached SCSI devices (LUNs).

z Systems adapter hardware typically provides multiple channels, with one port each. You can configure a channel to use the Fibre Channel Protocol (FCP). This *FCP channel* is then virtualized into multiple FCP devices. Thus, an FCP device is a virtual QDIO-based z Systems SCSI-over-Fibre Channel adapter with a single port.

A single physical port supports multiple FCP devices. Using N_Port ID virtualization (NPIV) you can define virtual ports and establish a one-to-one mapping between your FCP devices and virtual ports (see "N_Port ID Virtualization for FCP channels" on page 158).

On Linux, an FCP device is represented by a CCW device that is listed under `/sys/bus/ccw/drivers/zfcp`. Do not confuse FCP devices with SCSI devices. A SCSI device is identified by a LUN.

Features

The zfcp device driver supports a wide range of SCSI devices, various hardware adapters, specific topologies, and specific features that depend on the z Systems hardware.

- Linux on z Systems can use various SAN-attached SCSI device types, including SCSI disks, tapes, CD-ROMs, and DVDs. For a list of supported SCSI devices, see

  `www.ibm.com/systems/z/connectivity`
- SAN access through the following hardware adapters:
  - FICON Express16S (as of z13)
  - FICON Express8S
  - FICON Express8
  - FICON Express4

  You can order hardware adapters as features for mainframe systems.

  See *Fibre Channel Protocol for Linux and z/VM on IBM System z*, SG24-7266 for more details about using FCP with Linux on z Systems.
- The zfcp device driver supports switched fabric and point-to-point topologies.
- As of zEnterprise, the zfcp device driver supports end-to-end data consistency checking.
- As of FICON Express8S, the zfcp device driver supports the data router hardware feature to improve performance by reducing the path length.

For information about SCSI-3, the Fibre Channel Protocol, and fiber channel related information, see www.t10.org and www.t11.org

What you should know about zfcp

The zfcp device driver is a low-level driver or host-bus adapter driver that supplements the Linux SCSI stack.

Figure 27 illustrates how the device drivers work together.

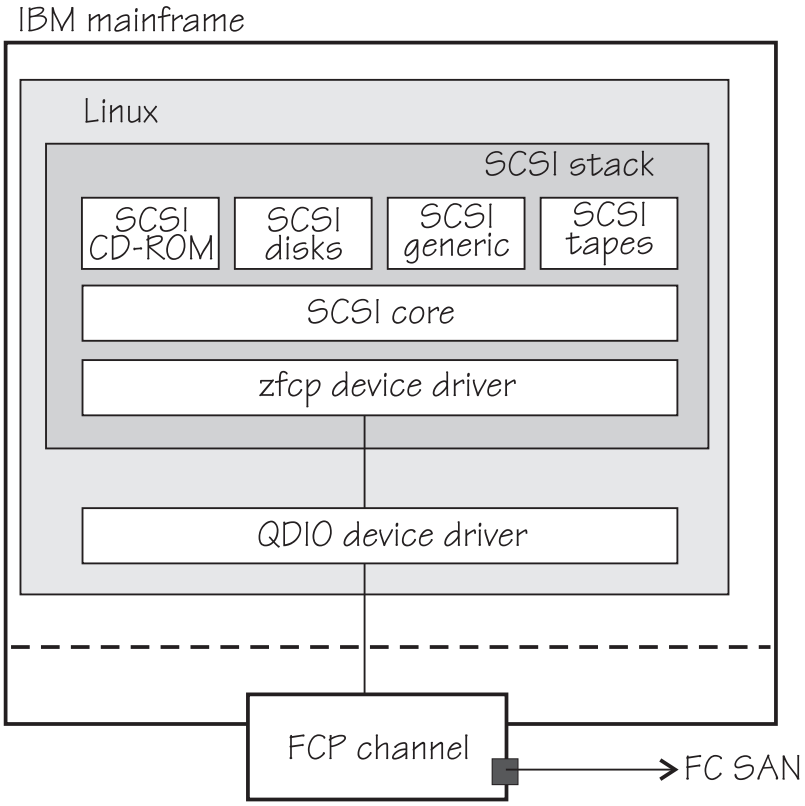

Figure 27. Device drivers that support the FCP environment

sysfs structures for FCP devices and SCSI devices

FCP devices are CCW devices. In the sysfs device driver view, remote target ports with their LUNs are nested below the FCP devices.

When Linux is booted, it senses the available FCP devices and creates directories of the form:

```
/sys/bus/ccw/drivers/zfcp/<device_bus_id>
```

where *<device_bus_id>* is the device bus-ID that corresponds to an FCP device. You use the attributes in this directory to work with the FCP device.

Example: `/sys/bus/ccw/drivers/zfcp/0.0.3d0c`

The zfcp device driver automatically adds port information when the FCP device is set online and when remote storage ports (*target ports*) are added. Each added target port extends this structure with a directory of the form:

```
/sys/bus/ccw/drivers/zfcp/<device_bus_id>/<wwpn>
```

where *<wwpn>* is the worldwide port name (WWPN) of the target port. You use the attributes of this directory to work with the port.

Example: `/sys/bus/ccw/drivers/zfcp/0.0.3d0c/0x500507630300c562`

With NPIV-enabled FCP devices, SUSE Linux Enterprise Server 12 SP3 uses automatic LUN scanning by default. The zfcp sysfs branch ends with the target

port entries. For FCP devices that are not NPIV-enabled, or if automatic LUN scanning is disabled, see "Configuring SCSI devices" on page 176.

Information about zfcp objects and their associated objects in the SCSI stack is distributed over the sysfs tree. To ease the burden of collecting information about zfcp devices, ports, units, and their associated SCSI stack objects, a command that is called **lszfcp** is provided with s390-tools. See "lszfcp - List zfcp devices" on page 621 for more details about the command.

See also "Mapping the representations of SCSI devices in sysfs" on page 178.

SCSI device nodes

User space programs access SCSI devices through device nodes.

SCSI device names are assigned in the order in which the devices are detected. In a typical SAN environment, this can mean a seemingly arbitrary mapping of names to actual devices that can change between boots. Therefore, using standard device nodes of the form `/dev/<device_name>` where *<device_name>* is the device name that the SCSI stack assigns to a device, can be a challenge.

SUSE Linux Enterprise Server 12 SP3 provides udev to create device nodes for you. Use the device nodes to identify the corresponding actual device.

Device nodes that are based on device names
: udev creates device nodes that match the device names that are used by the kernel. These standard device nodes have the form `/dev/<name>`.

The examples in this section use standard device nodes as assigned by the SCSI stack. These nodes have the form `/dev/sd<x>` for entire disks and `/dev/sd<x><n>` for partitions. In these node names *<x>* represents one or more letters and *<n>* is an integer. See `Documentation/devices.txt` in the Linux source tree for more information about the SCSI device naming scheme.

To help you identify a particular device, udev creates additional device nodes that are based on the device's bus ID, the device label, and information about the file system on the device. The file system information can be a universally unique identifier (UUID) and, if available, the file system label.

Device nodes that are based on bus IDs
: udev creates device nodes of the form

```
/dev/disk/by-path/ccw-<device_bus_id>-fc-<wwpn>-lun-<lun>
```

for whole SCSI device and

```
/dev/disk/by-path/ccw-<device_bus_id>-fc-<wwpn>-lun-<lun>-part<n>
```

for the *<n>*th partition, where *<wwpn>* is the worldwide port number of the target port and *<lun>* is the logical unit number that represents the target SCSI device.

Note: The format of these udev-created device nodes has changed and now matches the common code format. Device nodes of the prior form, `ccw-<device_bus_id>-zfcp-<wwpn>:<lun>` or `ccw-<device_bus_id>-zfcp-<wwpn>:<lun>-part<n>`, are also created for compatibility reasons.

Device nodes that are based on file system information
: udev creates device nodes of the form

`/dev/disk/by-uuid/<uuid>`

where <*uuid*> is a unique file-system identifier (UUID) for the file system in a partition.

If a file system label was assigned, udev also creates a node of the form:
`/dev/disk/by-label/<label>`

There are no device nodes for the whole SCSI device that are based on file system information.

Additional device nodes
`/dev/disk/by-id` contains additional device nodes for the SCSI device and partitions, that are all based on a unique SCSI identifier generated by querying the device.

Example

For a SCSI device that is assigned the device name sda, has two partitions labeled boot and SWAP-sda2 respectively, a device bus-ID 0.0.3c1b (device number 0x3c1b), and a UUID 7eaf9c95-55ac-4e5e-8f18-065b313e63ca for the first and b4a818c8-747c-40a2-bfa2-acaa3ef70ead for the second partition, udev creates the following device nodes:

For the whole SCSI device:
- `/dev/sda` (standard device node according to the SCSI device naming scheme)
- `/dev/disk/by-path/ccw-0.0.3c1b-fc-0x500507630300c562-lun-0x401040ea00000000`
- `/dev/disk/by-id/scsi-36005076303ffc56200000000000010ea`
- `/dev/disk/by-id/wwn-0x6005076303ffc56200000000000010ea`

For the first partition:
- `/dev/sda1` (standard device node according to the SCSI device naming scheme)
- `/dev/disk/by-path/ccw-0.0.3c1b-fc-0x500507630300c562-lun-0x401040ea00000000-part1`
- `/dev/disk/by-uuid/7eaf9c95-55ac-4e5e-8f18-065b313e63ca`
- `/dev/disk/by-label/boot`
- `/dev/disk/by-id/scsi-36005076303ffc56200000000000010ea-part1`
- `/dev/disk/by-id/wwn-0x6005076303ffc56200000000000010ea-part1`

For the second partition:
- `/dev/sda2` (standard device node according to the SCSI device naming scheme)
- `/dev/disk/by-path/ccw-0.0.3c1b-fc-0x500507630300c562-lun-0x401040ea00000000-part2`
- `/dev/disk/by-uuid/b4a818c8-747c-40a2-bfa2-acaa3ef70ead`
- `/dev/disk/by-label/SWAP-sda2`
- `/dev/disk/by-id/scsi-36005076303ffc56200000000000010ea-part2`
- `/dev/disk/by-id/wwn-0x6005076303ffc56200000000000010ea-part2`

Device nodes by-uuid use a unique file-system identifier that does not relate to the partition number.

Multipath

Users of SCSI-over-Fibre Channel attached devices should always consider setting up and using redundant paths through their Fibre Channel storage area network.

Path redundancy improves the availability of the LUNs. In Linux, you can set up path redundancy with the device-mapper multipath tool. For information about multipath devices and multipath partitions, see the chapter about multipathing in *How to use FC-attached SCSI devices with Linux on z Systems*, SC33-8413.

Partitioning a SCSI device

You can partition SCSI devices that are attached through an FCP channel in the same way that you can partition SCSI attached devices on other platforms.

About this task

Use the **fdisk** command to partition a SCSI disk, not **fdasd**.

udev creates device nodes for partitions automatically. For the SCSI disk `/dev/sda`, the partition device nodes are called `/dev/sda1`, `/dev/sda2`, `/dev/sda3`, and so on.

Example

To partition a SCSI disk with a device node `/dev/sda` issue:

```
# fdisk /dev/sda
```

zfcp HBA API (FC-HBA) support

The zfcp host bus adapter API (HBA API) provides an interface for HBA management clients that run on z Systems.

As shown in Figure 28 on page 158, the zfcp HBA API support includes a user space library.

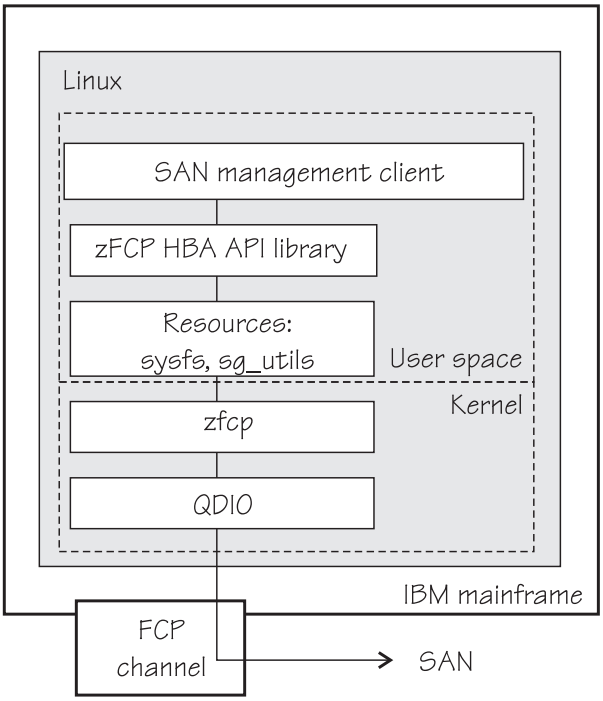

Figure 28. zfcp HBA API support modules

The zFCP HBA API library is part of SUSE Linux Enterprise Server 12 SP3. It is available as software package `libzfcphbaapi0`, see "Getting ready to run applications" on page 192.

The default method in SUSE Linux Enterprise Server 12 SP3 is for applications to use the zFCP HBA API library. If you develop applications yourself, see "Developing applications" on page 191.

In a Linux on z Systems environment, HBAs are usually virtualized and are shown as FCP devices.

For information about setting up the HBA API support, see "zfcp HBA API support" on page 191.

N_Port ID Virtualization for FCP channels

Through N_Port ID Virtualization (NPIV), the sole port of an FCP channel appears as multiple, distinct ports with separate port identification.

NPIV support can be configured on the SE per CHPID and LPAR for an FCP channel. The zfcp device driver supports NPIV error messages and adapter attributes. See "Displaying FCP channel and device information" on page 163 for the Fibre Channel adapter attributes.

For more information, see the connectivity page at www.ibm.com/systems/z/connectivity.

See also the chapter on NPIV in *How to use FC-attached SCSI devices with Linux on z Systems*, SC33-8413.

Setting up the zfcp device driver

SUSE Linux Enterprise Server 12 SP3 loads the zfcp device driver for you when an FCP channel becomes available. Use YaST to configure the zfcp device driver.

You have the following options for configuring FCP:

- Use the YaST GUI **yast2 zfcp**. If cio_ignore is enabled, you might need to free blacklisted FCP devices beforehand by using **yast2 cio**.
- Use the text-based interface **yast zfcp**. If cio_ignore is enabled, you might need to free blacklisted FCP devices beforehand by using **yast cio**
- Use the command line, use **zfcp_host_configure**. It transparently frees the FCP device specified on the command line from cio_ignore. cio_ignore does not apply to **zfcp_disk_configure**.

See the section about hard disk configuration in the *SUSE Linux Enterprise Server 12 SP3 Deployment Guide*, and the procedure about configuring a zFCP disk in *SUSE Linux Enterprise Server 12 SP3 Administration Guide*. The command-line tools described work not only inside the rescue environment but also in a regularly installed Linux instance.

Important: Configuration changes can directly or indirectly affect information that is required to mount the root file system. Such changes require an update of the initrd of both the auxiliary kernel and the target kernel, followed by a re-write of the boot record (see "Rebuilding the initial RAM disk image" on page 58).

The parameters are described in the context of the **modprobe** command. For details about specifying kernel and module parameters, see Chapter 3, "Kernel and module parameters," on page 25.

zfcp module parameter syntax

```
►►─modprobe─zfcp─┬─ allow_lun_scan=1 ──────────┬─┬─ datarouter=1 ─┬──────────────►
                 └─ allow_lun_scan=<value> ────┘ └─ datarouter=0 ─┘

►─┬─ dbflevel=3 ─────────┬─┬─ dbfsize=4 ─────────┬─┬─ dif=0 ─────────┬──────────►
  └─ dbflevel=<level> ───┘ └─ dbfsize=<pages> ───┘ └─ dif=<value> ───┘

►─┬─ port_scan_ratelimit=60000 ─┬─┬─ port_scan_backoff=500 ─────┬──────────────►
  └─ port_scan_ratelimit=<limit> ┘ └─ port_scan_backoff=<delay> ─┘

►─┬─ no_auto_port_rescan=0 ─┬─┬─ queue_depth=32 ─────────┬──────────────────►◄
  └─ no_auto_port_rescan=1 ─┘ └─ queue_depth=<depth> ────┘
```

where:

allow_lun_scan=<*value*>
: disables the automatic LUN scan for FCP devices that run in NPIV mode if set to 0, n, or N. To enable the LUN scanning set the parameter to 1, y, or Y. When

the LUN scan is disabled, all LUNs must be configured through the unit_add zfcp attribute in sysfs. LUN scan is enabled by default.

datarouter=
enables (if set to 1, y, or Y) or disables (if set to 0, n, or N) support for the hardware data routing feature. The default is 1.

Note: The hardware data routing feature becomes active only for FCP devices that are based on adapter hardware with hardware data routing support.

dbflevel=<*level*>
sets the initial log level of the debug feature. The value is an integer in the range 0 - 6, where greater numbers generate more detailed information. The default is 3.

dbfsize=<*pages*>
specifies the number of pages to be used for the debug feature.

The debug feature is available for each FCP device and the following areas:

hba FCP device
san Storage Area Network
rec Error Recovery Process
scsi SCSI
pay Payloads for entries in the hba, san, rec, or scsi areas. The default is 8 pages.

The value that is given is used for all areas. The default for hba, san, rec, and scsi is 4, that is, four pages are used for each area and FCP device. In the following example the dbsfsize is increased to 6 pages:

```
zfcp.dbfsize=6
```

This results in six pages being used for each area and FCP device. The payload is doubled to use 12 pages.

dif=<*value*>
turns on end-to-end data consistency checking if set to 1, y, or Y and off if set to 0, n, or N. The default is 0.

port_scan_ratelimit=<*limit*>
sets the minimum delay, in milliseconds, between automatic port scans of your Linux instance. The default value is 60000 milliseconds. To turn off the rate limit, specify 0. Use this parameter to avoid frequent scans, while you still ensure that a scan is conducted eventually.

port_scan_backoff=<*delay*>
sets additional random delay, in milliseconds, in which the port scans of your Linux instance are spread. The default value is 500 milliseconds. To turn off the random delay, specify 0. In an installation with multiple Linux instances, use this attribute for every Linux instance to spread scans to avoid potential multiple simultaneous scans.

no_auto_port_rescan=
turns the automatic port rescan feature off (if set to 1, y, or Y) or on (if set to 0, n, or N). The default is 0. Automatic rescan is always run when an adapter is set online and when user-triggered writes to the sysfs attribute port_rescan occur.

queue_depth=<*depth*>
specifies the number of commands that can be issued simultaneously to a SCSI device. The default is 32. The value that you set here is used as the default queue depth for new SCSI devices. You can change the queue depth for each SCSI device with the queue_depth sysfs attribute, see “Setting the queue depth” on page 182.

device=<*device_bus_id*>, <*wwpn*>, <*fcp_lun*>

Attention: The `device=` module parameter is reserved for internal use. Do not use.

<device_bus_id>
: specifies the FCP device through which the SCSI device is attached.

<wwpn>
: specifies the target port through which the SCSI device is attached.

<fcp_lun>
: specifies the LUN of the SCSI device.

Working with FCP devices

Set an FCP device online before you attempt to perform any other tasks.

Working with FCP devices comprises the following tasks:

- "Setting an FCP device online or offline"
- "Displaying FCP channel and device information" on page 163
- "Recovering a failed FCP device" on page 166
- "Finding out whether NPIV is in use" on page 167
- "Logging I/O subchannel status information" on page 168

Setting an FCP device online or offline

By default, FCP devices are offline. Set an FCP device online before you perform any other tasks.

About this task

Attention: Use the procedure described here for dynamic testing of configuration settings. For persistent configuration in a production system, use one of the following options:

- Use the YaST GUI **`yast2 zfcp`**. If cio_ignore is enabled, you might need to free blacklisted FCP devices before by using **`yast2 cio`**.
- Use the text-based interface **`yast zfcp`**. If cio_ignore is enabled, you might need to free blacklisted FCP devices before by using **`yast cio`**.
- Use the command line, use **`zfcp_host_configure`**. It transparently frees the FCP device given on the command line from cio_ignore.

See the section about IBM z Systems hard disk configuration in the *SUSE Linux Enterprise Server 12 SP3 Deployment Guide*, and the procedure about configuring a zFCP disk in *SUSE Linux Enterprise Server 12 SP3 Administration Guide*. The command line tools described work not only inside the rescue environment but also in a regularly installed Linux instance.

Important: Configuration changes can directly or indirectly affect information that is required to mount the root file system. Such changes require an update of the initrd of both the auxiliary kernel and the target kernel, followed by a re-write of the boot record (see "Rebuilding the initial RAM disk image" on page 58).

See "Working with newly available devices" on page 10 to avoid errors when you work with devices that have become available to a running Linux instance.

Setting an FCP device online registers it with the Linux SCSI stack and updates the symbolic port name for the device on the FC name server. For FCP setups that use NPIV mode, the device bus-ID and the host name of the Linux instance are added to the symbolic port name.

Setting an FCP device online also automatically runs the scan for ports in the SAN and waits for this port scan to complete.

To check if setting the FCP device online was successful, you can use a script that first sets the FCP device online and after this operation completes checks if the WWPN of a target port has appeared in sysfs.

When you set an FCP device offline, the port and LUN subdirectories are preserved. Setting an FCP device offline in sysfs interrupts the communication between Linux and the FCP channel. After a timeout has expired, the port and LUN attributes indicate that the ports and LUNs are no longer accessible. The transition of the FCP device to the offline state is synchronous, unless the device is disconnected.

For disconnected devices, writing 0 to the online sysfs attribute triggers an asynchronous deregistration process. When this process is completed, the device with its ports and LUNs is no longer represented in sysfs.

When the FCP device is set back online, the SCSI device names and minor numbers are freshly assigned. The mapping of devices to names and numbers might be different from what they were before the FCP device was set offline.

Procedure

There are two methods for setting an FCP device online or offline:

- Use the **chccwdev** command (see "chccwdev - Set CCW device attributes" on page 500). This is the preferred method.
- Alternatively, you can write 1 to an FCP device's online attribute to set it online, or `0` to set it offline.

Examples

- To set an FCP device with bus ID 0.0.3d0c online issue:

```
# chccwdev -e 0.0.3d0c
```

  or

```
# echo 1 > /sys/bus/ccw/drivers/zfcp/0.0.3d0c/online
```

- To set an FCP device with bus ID 0.0.3d0c offline issue:

```
# chccwdev -d 0.0.3d0c
```

  or

```
# echo 0 > /sys/bus/ccw/drivers/zfcp/0.0.3d0c/online
```

Displaying FCP channel and device information

For each online FCP device, there is a number of read-only attributes in sysfs that provide information about the corresponding FCP channel and FCP device.

Before you begin

The FCP device must be online for the FCP channel information to be valid.

About this task

The following tables summarize the relevant attributes.

Table 21. Attributes with FCP channel information

Attribute	Explanation
card_version	Version number that identifies a particular hardware feature.
hardware_version	Number that identifies a hardware version for a particular feature. The initial hardware version of a feature is zero. This version indicator is increased only for hardware modifications of the same feature. Appending hardware_version to card_version results in a hierarchical version indication for a physical adapter.
lic_version	Microcode level.
peer_wwnn	WWNN of peer for a point-to-point connection.
peer_wwpn	WWPN of peer for a point-to-point connection.
peer_d_id	Destination ID of the peer for a point-to-point connection.

Table 22. Attributes with FCP device information

Attribute	Explanation
in_recovery	Shows if the FCP channel is in recovery (0 or 1).

For the attributes availability, cmb_enable, and cutype, see "Device attributes" on page 9. The status attribute is reserved.

Table 23. Relevant transport class attributes, fc_host attributes

Attribute	Explanation
maxframe_size	Maximum frame size of adapter.
node_name	Worldwide node name (WWNN) of adapter.
permanent_port_name	WWPN associated with the physical port of the FCP channel.
port_id	A unique ID (N_Port_ID) assigned by the fabric. In an NPIV setup, each virtual port is assigned a different port_id.
port_name	WWPN associated with the FCP device. If N_Port ID Virtualization is not available, the WWPN of the physical port (see permanent_port_name).
port_type	The port type indicates the topology of the port.
serial_number	The 32-byte serial number of the adapter hardware that provides the FCP channel.
speed	Speed of FC link.
supported_classes	Supported FC service class.

Table 23. Relevant transport class attributes, fc_host attributes (continued)

Attribute	Explanation
symbolic_name	The symbolic port name that is registered with the FC name server.
supported_speeds	Supported speeds.
tgid_bind_type	Target binding type.

Table 24. Relevant transport class attributes, fc_host statistics

Attribute	Explanation
reset_statistics	Writeable attribute to reset statistic counters.
seconds_since_last_reset	Seconds since last reset of statistic counters.
tx_frames	Transmitted FC frames.
tx_words	Transmitted FC words.
rx_frames	Received FC frames.
rx_words	Received FC words.
lip_count	Number of LIP sequences.
nos_count	Number of NOS sequences.
error_frames	Number of frames that are received in error.
dumped_frames	Number of frames that are lost because of lack of host resources.
link_failure_count	Link failure count.
loss_of_sync_count	Loss of synchronization count.
loss_of_signal_count	Loss of signal count.
prim_seq_protocol_err_count	Primitive sequence protocol error count.
invalid_tx_word_count	Invalid transmission word count.
invalid_crc_count	Invalid CRC count.
fcp_input_requests	Number of FCP operations with data input.
fcp_output_requests	Number of FCP operations with data output.
fcp_control_requests	Number of FCP operations without data movement.
fcp_input_megabytes	Megabytes of FCP data input.
fcp_output_megabytes	Megabytes of FCP data output.

Procedure

Use the **cat** command to read an attribute.

- Issue a command of this form to read an attribute:

```
# cat /sys/bus/ccw/drivers/zfcp/<device_bus_id>/<attribute>
```

  where:

  <device_bus_id>
  specifies an FCP device that corresponds to the FCP channel.

  <attribute>
  is one of the attributes in Table 21 on page 163 or Table 22 on page 163.

- To read attributes of the associated Fibre Channel host use:

```
# cat /sys/class/fc_host/<host_name>/<attribute>
```

where:

<host_name>
: is the ID of the Fibre Channel host.

<attribute>
: is one of the attributes in Table 23 on page 163.

- To read statistics attributes of the FCP channel associated with this Fibre Channel host, use:

```
# cat /sys/class/fc_host/<host_name>/statistics/<attribute>
```

where:

<host_name>
: is the ID of the Fibre Channel host.

<attribute>
: is one of the attributes in Table 24 on page 164.

Examples

- In this example, information is displayed about an FCP channel that corresponds to an FCP device with bus ID 0.0.3d0c:

```
# cat /sys/bus/ccw/drivers/zfcp/0.0.3d0c/hardware_version
0x00000000
# cat /sys/bus/ccw/drivers/zfcp/0.0.3d0c/lic_version
0x00009111
```

- Alternatively you can use **lszfcp** (see "lszfcp - List zfcp devices" on page 621) to display attributes of an FCP channel:

```
# lszfcp -b 0.0.3d0c -a
0.0.3d0c host0
Bus = "ccw"
    availability        = "good"
    card_version        = "0x0005"
    cmb_enable          = "0"
    cutype              = "1731/03"
    devtype             = "1732/03"
    failed              = "0"
    hardware_version    = "0x00000000"
    in_recovery         = "0"
    lic_version         = "0x00009111"
    modalias            = "ccw:t1731m03dt1732dm03"
    online              = "1"
    peer_d_id           = "0x000000"
    peer_wwnn           = "0x0000000000000000"
    peer_wwpn           = "0x0000000000000000"
    status              = "0x5400000a"
    uevent              = "DRIVER=zfcp"
Class = "fc_host"
    active_fc4s = "0x00 0x00 ... 0x00"
    dev_loss_tmo = "60"
maxframe_size       = "2112 bytes"
    node_name           = "0x5005076400c89f25"
    permanent_port_name = "0xc05076ffe5005611"
    port_id             = "0x656e00"
    port_name           = "0xc05076ffe5005611"
    port_state          = "Online"
    port_type           = "NPort (fabric via point-to-point)"
    serial_number       = "IBM02000000089F25"
    speed               = "8 Gbit"
    supported_classes   = "Class 2, Class 3"
    supported_fc4s = "0x00 0x00 ... 0x00"
    supported_speeds    = "1 Gbit, 4 Gbit"
    symbolic_name       = "IBM 2817 020000000EAA14 PCHID: 0391"
    tgtid_bind_type     = "wwpn (World Wide Port Name)"
Class = "scsi_host"
    active_mode         = "Initiator"
    can_queue           = "4096"
    cmd_per_lun         = "1"
    host_busy           = "0"
    megabytes           = "28 0"
    proc_name           = "zfcp"
    prot_capabilities   = "0"
    prot_guard_type     = "0"
    queue_full          = "0 33333510"
    requests            = "184085 4 302"
    seconds_active      = "143"
    sg_tablesize        = "0"
    state               = "running"
    supported_mode      = "Initiator"
    unchecked_isa_dma   = "0"
    unique_id           = "5906"
    utilization         = "6 0 0"
```

Recovering a failed FCP device

Failed FCP devices are automatically recovered by the zfcp device driver. You can read the `in_recovery` attribute to check whether recovery is under way.

Before you begin

The FCP device must be online.

Procedure

Perform these steps to find out the recovery status of an FCP device and, if needed, start or restart recovery:

1. Issue a command of this form:

```
# cat /sys/bus/ccw/drivers/zfcp/<device_bus_id>/in_recovery
```

   The value is `1` if recovery is under way and `0` otherwise. If the value is `0` for a non-operational FCP device, recovery might have failed. Alternatively, the device driver might have failed to detect that the FCP device is malfunctioning.
2. To find out whether recovery failed, read the `failed` attribute. Issue a command of this form:

```
# cat /sys/bus/ccw/drivers/zfcp/<device_bus_id>/failed
```

   The value is `1` if recovery failed and `0` otherwise.
3. You can start or restart the recovery process for the FCP device by writing `0` to the `failed` attribute. Issue a command of this form:

```
# echo 0 > /sys/bus/ccw/drivers/zfcp/<device_bus_id>/failed
```

Example

In the following example, an FCP device with a device bus-ID 0.0.3d0c is malfunctioning. The first command reveals that recovery is not already under way. The second command manually starts recovery for the FCP device:

```
# cat /sys/bus/ccw/drivers/zfcp/0.0.3d0c/in_recovery
0
# echo 0 > /sys/bus/ccw/drivers/zfcp/0.0.3d0c/failed
```

Finding out whether NPIV is in use

An FCP device runs in NPIV mode if the `port_type` attribute of the FCP device attribute contains the string "NPIV". Alternatively, if the applicable `permanent_port_name` and `port_name` are not the same and are not NULL.

Procedure

Read the `port_type` attribute of the FCP device.
For example:

```
# cat /sys/bus/ccw/drivers/zfcp/0.0.1940/host0/fc_host/host0/port_type
NPIV VPORT
```

Alternatively, compare the values of the `permanent_port_name` attribute and the `port_name`.

Tip: You can use **`lszfcp`** (see “lszfcp - List zfcp devices” on page 621) to list the FCP device attributes.

Example

```
# lszfcp -b 0.0.1940 -a
0.0.1940 host0
Bus = "ccw"
    availability        = "good"
    ...
Class = "fc_host"
    active_fc4s = "0x00 0x00 ... 0x00"
    dev_loss_tmo = "60"
    maxframe_size       = "2112 bytes"
    node_name           = "0x5005076400c1ebae"
    permanent_port_name = "0x50050764016219a0"
    port_id             = "0x65ee01"
    port_name           = "0xc05076ffef805388"
    port_state          = "Online"
    port_type           = "NPIV VPORT"
    ...
    symbolic_name       = "DEVNO: 0.0.1940 NAME: mylinux"
    ...
```

The `port_type` attribute directly indicates that NPIV is used. The example also shows that `permanent_port_name` is different from `port_name` and neither is NULL. The example also shows the `symbolic_name` attribute that shows the symbolic port name that was registered on the FC name server.

Logging I/O subchannel status information

When severe errors occur for an FCP device, the FCP device driver triggers a set of log entries with I/O subchannel status information.

The log entries are available through the SE Console Actions Work Area with the View Console Logs function. In the list of logs, these entries have the prefix `1F00`. The content of the entries is intended for support specialists.

Working with target ports

You can scan for ports, display port information, recover a port, or remove a port.

Working with target ports comprises the following tasks:

- "Scanning for ports"
- "Controlling automatic port scanning" on page 169
- "Displaying port information" on page 172
- "Recovering a failed port" on page 173
- "Removing ports" on page 174

Scanning for ports

Newly available target ports are discovered. However, you might want to trigger a port scan to re-create accidentally removed port information or to assure that all ports are present.

Before you begin

The FCP device must be online.

About this task

The zfcp device driver automatically adds port information to sysfs when:

- The FCP device is set online
- Target ports are added to the Fibre Channel fabric, unless the module parameter `no_auto_port_rescan` is set to 1. See "Setting up the zfcp device driver" on page 159.

Scanning for ports might take some time to complete. Commands that you issue against ports or LUNs while scanning is in progress are delayed and processed when port scanning is completed.

Use the `port_rescan` attribute if a remote storage port was accidentally deleted from the adapter configuration or if you are unsure whether all ports were added to sysfs.

Procedure

Issue a command of this form:

```
# echo 1 > /sys/bus/ccw/drivers/zfcp/<device_bus_id>/port_rescan
```

where *<device_bus_id>* specifies the FCP device through which the target ports are attached.

Tip: List the contents of `/sys/bus/ccw/drivers/zfcp/<device_bus_id>` to find out which ports are currently configured for the FCP device.

Example

In this example, a port with WWPN 0x500507630303c562 is already configured for an FCP device with bus ID 0.0.3d0c. An additional target port with WWPN 0x500507630300c562 is automatically configured by triggering a port scan.

```
# ls /sys/bus/ccw/drivers/zfcp/0.0.3d0c/0x*
0x500507630303c562
# echo 1 > /sys/bus/ccw/drivers/zfcp/0.0.3d0c/port_rescan
# ls /sys/bus/ccw/drivers/zfcp/0.0.3d0c/0x*
0x500507630303c562
0x500507630300c562
```

Controlling automatic port scanning

Automatic port scanning includes two zfcp parameters that improve the behaviour of Linux instances in SANs. These zfcp parameters are set to default values that work well for most installations.

If needed, you can fine-tune the frequency and timing of automatic port scans with the zfcp parameters `port_scan_backoff` and `port_scan_ratelimit`.

You can enable automatic port scanning with the zfcp parameter `no_auto_port_rescan=0`. This value is the default.

About this task

In a large installation, where many Linux instances receive the same notifications of SAN changes, multiple instances might trigger scans simultaneously and too

frequently. See Figure 29

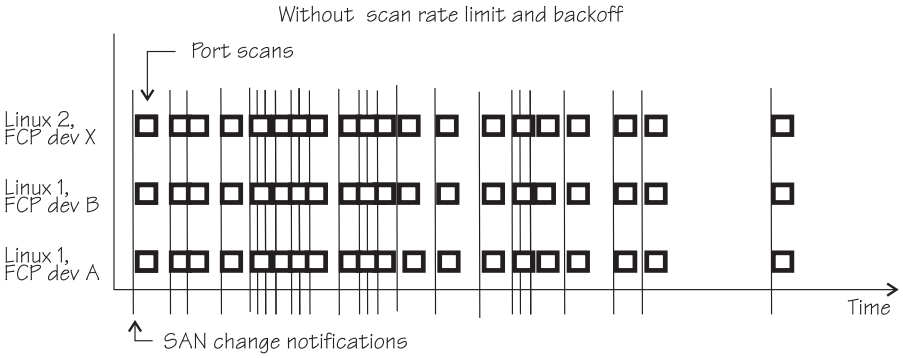

Figure 29. Numerous port scans in a Linux installation

These scans might put unnecessary load on the name server function of fabric switches and potentially result in late or inconclusive results.

You can avoid excessive scanning, yet still ensure that a port scan is eventually conducted. You can control port scanning with the zfcp parameters:

`port_scan_ratelimit`
: sets the minimum delay, in milliseconds, between automatic port scans of your Linux instance. The default value is 60000 milliseconds. To turn off the rate limit, specify 0.

`port_scan_backoff`
: sets an additional random delay, in milliseconds, in which the port scans of your Linux instance are spread. In an installation with multiple Linux instances, use this zfcp parameter for every Linux instance to spread scans to avoid potential multiple simultaneous scans. The default value is 500 milliseconds. To turn off the random delay, specify 0.

Use module parameters to set values for port scanning. See "Setting up the zfcp device driver" on page 159 for zfcp attributes. On a running Linux system, you can also query or set these values by using the sysfs attributes with the same names.

Using `port_scan_ratelimit` reduces the number of scans, as shown in Figure 30

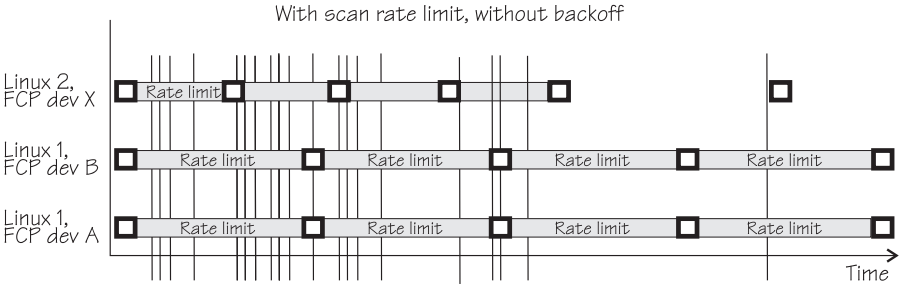

Figure 30. Port scan behavior with scan rate limit.

However, if the rate limit is set to the same value, the scans can still occur almost simultaneously, as for FCP device A and B in Linux 1.

Using `port_scan_backoff` and `port_scan_ratelimit` together delays port scans even further and avoids simultaneous scans, as shown in Figure 31 on page 171. In

the figure, FCP devices A and B in Linux 1 have the same rate limit and the same backoff values. The random element in the backoff value causes the scans to occur at slightly different times.

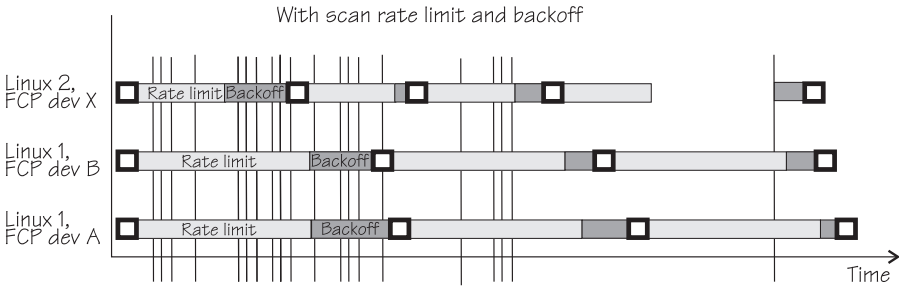

Figure 31. Port scan behavior with backoff and scan rate limit.

Procedure

Use `port_scan_backoff` and `port_scan_ratelimit` together or separately to tune the behavior of port scanning:

- To avoid too frequent scanning, set a minimum wait time between two consecutive scans for the same Linux instance. Use the `port_scan_ratelimit` sysfs attribute. By default, `port_scan_ratelimit` is turned on and has a value of 60000 milliseconds. For example, to specify an attribute value of 12 seconds, issue:

  ```
  # echo 12000 > /sys/module/zfcp/parameters/port_scan_ratelimit
  ```

- To further spread scans over a certain time and thus avoid multiple simultaneous scans, set the `port_scan_backoff` sysfs attribute. By default, `port_scan_backoff` is turned on and has a value of 500 milliseconds. For example, to query the setting, issue a command of this form:

  ```
  # cat /sys/module/zfcp/parameters/port_scan_backoff
  500
  ```

  To set the attribute to 1 second, issue:

  ```
  # echo 1000 > /sys/module/zfcp/parameters/port_scan_backoff
  ```

Results

The automatic port scans are delayed by the values specified. If a SAN notification is received during the rate limit time, a port scan is conducted immediately after the delay time passed.

Depending on the port event, one or more of the three zfcp parameters are evaluated to schedule a port scan. For example, port scans that are triggered manually through sysfs are not delayed. Table 25 on page 172 shows which events evaluate which zfcp parameters.

Table 25. Port events and their use of port scanning zfcp parameters.

zfcp parameter	no_auto_port_rescan	port_scan_backoff	port_scan_ratelimit
Event			
FCP device resume	Yes	Yes	No
User sets FCP device online	No	Yes	No
User initiates a port scan	No	No	No
User starts FCP device recovery	Yes	Yes	Yes
Automatic FCP device recovery	Yes	Yes	Yes
SAN change notification	Yes	Yes	Yes

Displaying port information

For each target port, there is a number of read-only sysfs attributes with port information.

About this task

Table 26 and Table 27 summarize the relevant attributes.

Table 26. zfcp-specific attributes with port information within the FCP device sysfs tree

Attribute	Explanation
access_denied	This attribute is obsolete. The value is always `0`.
in_recovery	Shows if port is in recovery (0 or 1)

Table 27. Transport class attributes with port information

Attribute	Explanation
node_name	WWNN of the remote port.
port_name	WWPN of remote port.
port_id	Destination ID of remote port
port_state	State of remote port.
roles	Role of remote port (usually FCP target).
scsi_target_id	Linux SCSI ID of remote port.
supported_classes	Supported classes of service.

Procedure

Use the **cat** command to read an attribute.

- Issue a command of this form to read a zfcp-specific attribute:

```
# cat /sys/bus/ccw/drivers/zfcp/<device_bus_id>/<wwpn>/<attribute>
```

where:

<device_bus_id>
specifies the FCP device.
<wwpn>
is the WWPN of the target port.
<attribute>
is one of the attributes in Table 26 on page 172.

- To read transport class attributes of the associated target port, use a command of this form:

```
# cat /sys/class/fc_remote_port/<rport_name>/<attribute>
```

where:
<rport_name>
is the name of the target port.
<attribute>
is one of the attributes in Table 27 on page 172.

Tip: With the HBA API package installed, you can also use the **zfcp_ping** and **zfcp_show** commands to find out more about your ports. See "Tools for investigating your SAN configuration" on page 193.

Examples

- In this example, information is displayed for a target port 0x500507630300c562 that is attached through an FCP device with bus ID 0.0.3d0c:

```
# cat /sys/bus/ccw/drivers/zfcp/0.0.3d0c/0x500507630300c562/in_recovery
0
```

- To display transport class attributes of a target port you can use **lszfcp**:

```
# lszfcp -p 0x500507630300c562 -a
0.0.3d0c/0x500507630300c562 rport-0:0-0
...
Class = "fc_remote_ports"
    active_fc4s         = "0x00 0x00 0x01 ...
    dev_loss_tmo        = "60"
    fast_io_fail_tmo    = "off"
    maxframe_size       = "2048 bytes"
    node_name           = "0x5005076303ffc562"
    port_id             = "0x652113"
    port_name           = "0x500507630300c562"
    port_state          = "Online"
    roles               = "FCP Target"
    scsi_target_id      = "0"
    supported_classes   = "Class 2, Class 3"
...
```

Recovering a failed port

Failed target ports are automatically recovered by the zfcp device driver. You can read the `in_recovery` attribute to check whether recovery is under way.

Before you begin

The FCP device must be online.

Procedure

Perform these steps to find out the recovery status of a port and, if needed, start or restart recovery:

1. Issue a command of this form:

   ```
   # cat /sys/bus/ccw/drivers/zfcp/<device_bus_id>/<wwpn>/in_recovery
   ```

   where:
   <device_bus_id>
   specifies the FCP device.
   <wwpn>
   is the WWPN of the target port.

   The value is `1` if recovery is under way, and `0` otherwise. If the value is `0` for a non-operational port, recovery might have failed, or the device driver might have failed to detect that the port is malfunctioning.
2. To find out whether recovery failed, read the `failed` attribute. Issue a command of this form:

   ```
   # cat /sys/bus/ccw/drivers/zfcp/<device_bus_id>/<wwpn>/failed
   ```

   The value is `1` if recovery failed, and `0` otherwise.
3. You can start or restart the recovery process for the port by writing `0` to the `failed` attribute. Issue a command of this form:

   ```
   # echo 0 > /sys/bus/ccw/drivers/zfcp/<device_bus_id>/<wwpn>/failed
   ```

Example

In the following example, a port with WWPN 0x500507630300c562 that is attached through an FCP device with bus ID 0.0.3d0c is malfunctioning. The first command reveals that recovery is not already under way. The second command manually starts recovery for the port:

```
# cat /sys/bus/ccw/drivers/zfcp/0.0.3d0c/0x500507630300c562/in_recovery
0
# echo 0 > /sys/bus/ccw/drivers/zfcp/0.0.3d0c/0x500507630300c562/failed
```

Removing ports

Removing unused ports can save FCP channel resources. Additionally setting the `no_auto_port_rescan` attribute avoids unnecessary attempts to recover unused remote ports.

Before you begin

The FCP device must be online.

About this task

List the contents of `/sys/bus/ccw/drivers/zfcp/<device_bus_id>` to find out which ports are currently configured for the FCP device.

You cannot remove a port while SCSI devices are configured for it (see "Configuring SCSI devices" on page 176) or if the port is in use, for example, by error recovery.

Note: The next port scan will attach all available ports, including any previously removed ports. To prevent removed ports from being reattached automatically, use zoning or the no_auto_port_rescan module parameter, see "Setting up the zfcp device driver" on page 159.

Procedure

Issue a command of this form:

```
# echo <wwpn> > /sys/bus/ccw/drivers/zfcp/<device_bus_id>/port_remove
```

where:

<device_bus_id>
: specifies the FCP device.

<wwpn>
: is the WWPN of the port to be removed.

Example

In this example, two ports with WWPN 0x500507630303c562 and 0x500507630300c562 are configured for an FCP device with bus ID 0.0.3d0c. The port with WWPN 0x500507630303c562 is then removed.

```
# ls /sys/bus/ccw/drivers/zfcp/0.0.3d0c/0x*
0x500507630303c562
0x500507630300c562
# echo 0x500507630303c562 > /sys/bus/ccw/drivers/zfcp/0.0.3d0c/port_remove
# ls /sys/bus/ccw/drivers/zfcp/0.0.3d0c/0x*
0x500507630300c562
```

Working with SCSI devices

In an NPIV setup with auto lun scan, the SCSI devices are configured automatically. Otherwise, you must configure FCP LUNs to obtain SCSI devices. In both cases, you can configure SCSI devices, display information, and remove SCSI devices.

Working with SCSI devices comprises the following tasks:

Configuring SCSI devices

FCP devices that use NPIV mode detect the LUNs automatically and no configuring is necessary. If needed, write the LUN to be configured to the sysfs `unit_add` attribute of the applicable target port.

For each FCP device that uses NPIV mode and if you did not disable automatic LUN scanning (see "Setting up the zfcp device driver" on page 159), the LUNs are configured for you. In this case, *no* FCP LUN entries are created under `/sys/bus/ccw/drivers/zfcp/<device_bus_id>/<wwpn>`.

To find out whether an FCP device is using NPIV mode, check the `port_type` attribute, for example:

```
# cat /sys/bus/ccw/drivers/zfcp/0.0.1901/host0/fc_host/host0/port_type
NPIV VPORT
```

To find out whether automatic LUN scanning is enabled, check the current setting of the module parameter zfcp.allow_lun_scan. The example below shows automatic LUN scanning as turned on.

```
# cat /sys/module/zfcp/parameters/allow_lun_scan
Y
```

Important: Configuration changes can directly or indirectly affect information that is required to mount the root file system. Such changes require an update of the initrd of both the auxiliary kernel and the target kernel, followed by a re-write of the boot record (see "Rebuilding the initial RAM disk image" on page 58).

Automatically attached SCSI devices

FCP devices that use NPIV mode detect the LUNs automatically and no configuring is necessary.

In this case, *no* FCP LUN entries are created under `/sys/bus/ccw/drivers/zfcp/<device_bus_id>/<wwpn>`.

What to do next

To check whether a SCSI device is registered, check for a directory with the name of the LUN in `/sys/bus/scsi/devices`. If there is no SCSI device for this LUN, the LUN is not valid in the storage system, or the FCP device is offline in Linux.

Manually configured FCP LUNs and their SCSI devices

For FCP devices that do not use NPIV mode, or if automatic LUN scanning is disabled, FCP LUNs must be configured manually to obtain SCSI devices.

Before you begin

Attention: Use this procedure only to dynamically test configuration settings.

To configure persistent setting in a production system, use one of the following options:

- The YaST GUI **`yast2 zfcp`**. If cio_ignore is enabled, you might need to free blacklisted FCP devices beforehand by using **`yast2 cio`**. If cio_ignore is enabled, you might need to free blacklisted FCP devices beforehand by using **`yast cio`**

- The text-based interface **yast zfcp**
- The command line, use **zfcp_disk_configure**. Cio_ignore does not apply here.

See the section about IBM z Systems hard disk configuration in the *SUSE Linux Enterprise Server 12 SP3 Deployment Guide*, and the procedure about configuring a zFCP disk in *SUSE Linux Enterprise Server 12 SP3 Administration Guide*. The command-line tools described work not only inside the rescue environment but also in a regularly installed Linux instance.

You can always specify additional zfcp module parameters as explained in Chapter 3, "Kernel and module parameters," on page 25

Procedure

If your FCP device does not use NPIV mode, or if you have disabled automatic LUN scanning, proceed as follows:

To configure a SCSI device for a target port, write the device's LUN to the port's `unit_add` attribute. Issue a command of this form:

```
# echo <fcp_lun> > /sys/bus/ccw/drivers/zfcp/<device_bus_id>/<wwpn>/unit_add
```

where:

<fcp_lun>
: is the LUN of the SCSI device to be configured. The LUN is a 16 digit hexadecimal value padded with zeros, for example 0x4010403300000000.

<device_bus_id>
: specifies the FCP device.

<wwpn>
: is the WWPN of the target port.

This command starts a process with multiple steps:

1. It creates a directory in `/sys/bus/ccw/drivers/zfcp/<device_bus_id>/<wwpn>` with the LUN as the directory name. The directory is part of the list of all LUNs to configure. Without NPIV or with auto LUN scanning disabled, zfcp registers only FCP LUNs contained in this list with the Linux SCSI stack in the next step.
2. It initiates the registration of the SCSI device with the Linux SCSI stack. The FCP device must be online for this step.
3. It waits until the Linux SCSI stack registration completes successfully or returns an error. It then returns control to the shell. A successful registration creates a sysfs entry in the SCSI branch (see "Mapping the representations of SCSI devices in sysfs" on page 178).

Example

In this example, a target port with WWPN 0x500507630300c562 is attached through an FCP device with bus ID 0.0.3d0c. A SCSI device with LUN 0x4010403200000000 is already configured for the port. An additional SCSI device with LUN 0x4010403300000000 is added to the port.

```
# ls /sys/bus/ccw/drivers/zfcp/0.0.3d0c/0x500507630300c562/0x*
0x4010403200000000
# echo 0x4010403300000000 > /sys/bus/ccw/drivers/zfcp/0.0.3d0c/0x500507630300c562/unit_add
# ls /sys/bus/ccw/drivers/zfcp/0.0.3d0c/0x500507630300c562/0x*
0x4010403200000000
0x4010403300000000
```

What to do next

To check whether a SCSI device is registered for the configured LUN, check for a directory with the name of the LUN in `/sys/bus/scsi/devices`. If there is no SCSI device for this LUN, the LUN is not valid in the storage system, or the FCP device is offline in Linux.

To see which LUNs are currently configured for the port, list the contents of `/sys/bus/ccw/drivers/zfcp/<device_bus_id>/<wwpn>`.

Mapping the representations of SCSI devices in sysfs

Each SCSI device that is configured is represented by multiple directories in sysfs, in particular, within the SCSI branch. Only manually configured LUNs are also represented within the zfcp branch.

About this task

The directory in the sysfs SCSI branch has the following form:

`/sys/bus/scsi/devices/<scsi_host_no>:0:<scsi_id>:<scsi_lun>`

where:

<scsi_host_no>
: is the SCSI host number that corresponds to the FCP device.

<scsi_id>
: is the SCSI ID of the target port.

<scsi_lun>
: is the LUN of the SCSI device.

The values for *<scsi_id>* and *<scsi_lun>* depend on the storage device. Often, they are single-digit numbers but for some storage devices they have numerous digits.

For manually configured FCP LUNs, see "Manually configured FCP LUNs and their SCSI devices" on page 176 for details about the directory in the zfcp branch.

Figure 32 on page 179 shows how the directory name is composed in the sysfs SCSI branch. The sysfs zfcp branch only exists for manually configured FCP LUNs. For manually configured FCP LUNs, the directory name is composed of attributes of consecutive directories and you can find the name of the directory in the sysfs SCSI branch by reading the corresponding attributes in the zfcp branch.

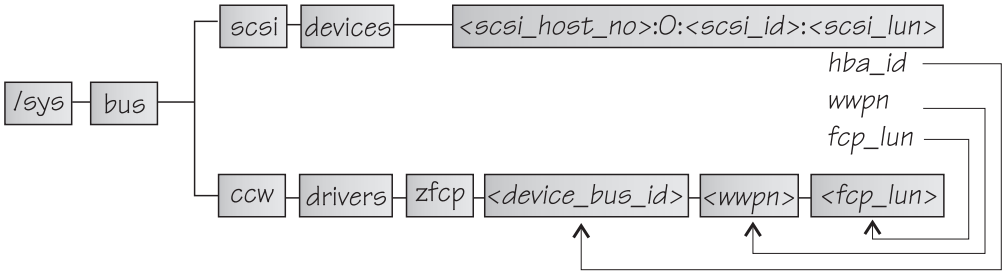

Figure 32. SCSI devices in sysfs

The `hba_id`, `wwpn`, and `fcp_lun` attributes of the SCSI device in the SCSI branch match the names of the *<device_bus_id>*, *<wwpn>* and *<fcp_lun>* directories for the same SCSI device in the zfcp branch.

Procedure

Use **`lszfcp`** (see "lszfcp - List zfcp devices" on page 621) to map the two representations of a SCSI device.

Example

This example shows how to use **`lszfcp`** to display the name of the SCSI device that corresponds to a zfcp unit, for example:

```
# lszfcp -l 0x4010403200000000
0.0.3d0c/0x500507630300c562/0x4010403200000000 0:0:0:0
```

In the example, the output informs you that the unit with the LUN 0x4010403200000000, which is configured on a port with the WWPN 0x500507630300c562 for an FCP device with bus ID 0.0.3d0c, maps to SCSI device "0:0:0:0".

To confirm that the SCSI device belongs to the zfcp unit:

```
# cat /sys/bus/scsi/devices/0:0:0:0/hba_id
0.0.3d0c
# cat /sys/bus/scsi/devices/0:0:0:0/wwpn
0x500507630300c562
# cat /sys/bus/scsi/devices/0:0:0:0/fcp_lun
0x4010403200000000
```

Displaying information about SCSI devices

For each SCSI device, there is a number of read-only attributes in sysfs that provide information for the device.

About this task

Table 28 on page 180 summarizes the read-only attributes for manually configured FCP LUNs, including those attributes that indicate whether the device access is restricted by access control software on the FCP channel. These attributes can be found in the zfcp branch of sysfs. The path has the form:

`/sys/bus/ccw/drivers/zfcp/<device_bus_id>/<wwpn>/<fcp_lun>/<attribute>`

Table 28. Attributes of manually configured FCP LUNs with device access information

Attribute	Explanation
access_denied	Flag that indicates whether access to the device is restricted by the FCP channel. The value is `1` if access is denied and `0` if access is permitted. If access is denied to your Linux instance, confirm that your SCSI devices are configured as intended. Also, be sure that you really want to share a SCSI device. For shared access to a SCSI device, preferably use NPIV (see "N_Port ID Virtualization for FCP channels" on page 158). You might also use different FCP channels or target ports.
access_shared	This attribute is obsolete. The value is always `0`.
access_readonly	This attribute is obsolete. The value is always `0`.
in_recovery	Shows if unit is in recovery (0 or 1)

Table 29 lists further read-only attributes with information about the SCSI device. These attributes can be found in the SCSI branch of sysfs. The path has the form:
`/sys/class/scsi_device/<device_name>/device/<attribute>`

Table 29. SCSI device class attributes

Attribute	Explanation
device_blocked	Flag that indicates whether the device is in blocked state (0 or 1).
iocounterbits	The number of bits used for I/O counters.
iodone_cnt	The number of completed or rejected SCSI commands.
ioerr_cnt	The number of SCSI commands that completed with an error.
iorequest_cnt	The number of issued SCSI commands.
queue_type	The type of queue for the SCSI device. The value can be one of the following types: • none • simple • ordered
model	The model of the SCSI device, received from inquiry data.
rev	The revision of the SCSI device, received from inquiry data.
scsi_level	The SCSI revision level, received from inquiry data.
type	The type of the SCSI device, received from inquiry data.
vendor	The vendor of the SCSI device, received from inquiry data.
fcp_lun	The LUN of the SCSI device in 64-bit format.
hba_id	The bus ID of the SCSI device.
wwpn	The WWPN of the remote port.
zfcp_access_denied	Flag that indicates whether access to the device is restricted by the FCP channel. The value is `1` if access is denied and `0` if access is permitted. If access is denied to your Linux instance, confirm that your SCSI devices are configured as intended. Also, be sure that you really want to share a SCSI device. For shared access to a SCSI device, preferably use NPIV (see "N_Port ID Virtualization for FCP channels" on page 158). You might also use different FCP channels or target ports.

Table 29. SCSI device class attributes (continued)

Attribute	Explanation
zfcp_in_recovery	Shows if unit is in recovery (0 or 1).

Procedure

Issue a command of this form to read an attribute of a manually configured FCP LUN:

```
# cat /sys/bus/ccw/drivers/zfcp/<device_bus_id>/<wwpn>/<fcp_lun>/<attribute>
```

where:

<device_bus_id>
: specifies the FCP device.

<wwpn>
: is the WWPN of the target port.

<fcp_lun>
: is the FCP LUN of the SCSI device.

<attribute>
: is one of the attributes in Table 28 on page 180.

Use the **lszfcp** command (see "lszfcp - List zfcp devices" on page 621) to display information about the associated SCSI device.
Alternatively, you can use sysfs to read the information. To read attributes of the associated SCSI device, use a command of this form:

```
# cat /sys/class/scsi_device/<device_name>/device/<attribute>
```

where:

<device_name>
: is the name of the associated SCSI device.

<attribute>
: is one of the attributes in Table 29 on page 180.

Tip: For SCSI tape devices, you can display a summary of this information by using the **lstape** command (see "lstape - List tape devices" on page 609).

Examples

- In this example, information is displayed for a manually configured FCP LUN with LUN 0x4010403200000000 that is accessed through a target port with WWPN 0x500507630300c562 and is attached through an FCP device 0.0.3d0c. For the device, access is permitted.

  ```
  # cat /sys/bus/ccw/drivers/zfcp/0.0.3d0c/0x500507630300c562/0x4010403200000000/access_denied
  0
  ```

  For the device to be accessible, the access_denied attribute of the target port, 0x500507630300c562, must also be `0` (see "Displaying port information" on page 172).
- You can use **lszfcp** to display attributes of a SCSI device:

```
# lszfcp -l 0x4010403200000000 -a
0.0.3d0c/0x500507630300c562/0x4010403200000000 0:0:0:0
Class = "scsi_device"
    ...
    device_blocked      = "0"
    ...
    fcp_lun             = "0x4010403200000000"
    hba_id              = "0.0.3d0c"
    iocounterbits       = "32"
    iodone_cnt          = "0xbe"
    ioerr_cnt           = "0x2"
    iorequest_cnt       = "0xbe"
    ...
    model               = "2107900"
    queue_depth         = "32"
    queue_ramp_up_period = "120000"
    queue_type          = "simple"
    ...
    rev                 = ".166"
    scsi_level          = "6"
    state               = "running"
    timeout             = "30"
    type                = "0"
    uevent              = "DEVTYPE=scsi_device"
    vendor              = "IBM"
    ...
    wwpn                = "0x500507630300c562"
    zfcp_access_denied  = "0"
    zfcp_failed         = "0"
    zfcp_in_recovery    = "0"
    zfcp_status         = "0x54000000"
```

Setting the queue depth

The Linux SCSI code automatically adjusts the queue depth as necessary. Changing the queue depth is usually a storage server requirement.

Before you begin

Check the documentation of the storage server used or contact your storage server support group to establish if there is a need to change this setting.

About this task

The value of the queue_depth kernel parameter (see "Setting up the zfcp device driver" on page 159) is used as the default queue depth of new SCSI devices. You can query the queue depth by issuing a command of this form:

```
# cat /sys/bus/scsi/devices/<SCSI device>/queue_depth
```

Example:

```
# cat /sys/bus/scsi/devices/0:0:19:1086537744/queue_depth
16
```

You can change the queue depth of each SCSI device by writing to the queue_depth attribute, for example:

```
# echo 8 > /sys/bus/scsi/devices/0:0:19:1086537744/queue_depth
# cat /sys/bus/scsi/devices/0:0:19:1086537744/queue_depth
8
```

This method is useful on a running system where you want to make dynamic changes. If you want to make the changes persistent across IPLs, you can:

- Use the kernel or module parameter.
- Write a udev rule to change the setting for each new SCSI device.

Linux forwards SCSI commands to the storage server until the number of pending commands exceeds the queue depth. If the server lacks the resources to process a SCSI command, Linux queues the command for a later retry and decreases the queue depth counter. Linux then waits for a defined ramp-up period. If no indications of resource problems occur within this period, Linux increases the queue depth counter until reaching the previously set maximum value. To query the current value for the queue ramp-up period in milliseconds:

```
# cat /sys/bus/scsi/devices/0:0:13:1086537744/queue_ramp_up_period
120000
```

To set a new value for the queue ramp-up period in milliseconds:

```
# echo 1000 > /sys/bus/scsi/devices/0:0:13:1086537744/queue_ramp_up_period
```

Recovering failed SCSI devices

Failed SCSI devices are automatically recovered by the zfcp device driver. You can read the `zfcp_in_recovery` attribute to check whether recovery is under way.

Before you begin

The FCP device must be online.

Procedure

Perform the following steps to check the recovery status of a failed SCSI device:

1. Check the value of the `zfcp_in_recovery` attribute. Issue the **lszfcp** command:

   ```
   # lszfcp -l <LUN> -a
   ```

   where <*LUN*> is the LUN of the associated SCSI device.

   Alternatively, you can issue a command of this form:

   ```
   # cat /sys/class/scsi_device/<device_name>/device/zfcp_in_recovery
   ```

   The value is `1` if recovery is under way and `0` otherwise. If the value is `0` for a non-operational SCSI device, recovery might have failed. Alternatively, the device driver might have failed to detect that the SCSI device is malfunctioning.

2. To find out whether recovery failed, read the `zfcp_failed` attribute. Either use the **lszfcp** command again, or issue a command of this form:

   ```
   # cat /sys/class/scsi_device/<device_name>/device/zfcp_failed
   ```

   The value is `1` if recovery failed, and `0` otherwise.

3. You can start or restart the recovery process for the SCSI device by writing `0` to the `zfcp_failed` attribute. Issue a command of this form:

```
# echo 0 > /sys/class/scsi_device/<device_name>/device/zfcp_failed
```

Example

In the following example, SCSI device 0:0:0:0 is malfunctioning. The first command reveals that recovery is not already under way. The second command manually starts recovery for the SCSI device:

```
# cat /sys/class/scsi_device/0:0:0:0/device/zfcp_in_recovery
0
# echo 0 > /sys/class/scsi_device/0:0:0:0/device/zfcp_failed
```

What to do next

If you manually configured an FCP LUN (see "Manually configured FCP LUNs and their SCSI devices" on page 176), but did not get a corresponding SCSI device, you can also use the corresponding FCP LUN sysfs attributes, `in_recovery` and `failed`, to check on recovery. See Table 28 on page 180.

Updating the information about SCSI devices

Use the `rescan` attribute of the SCSI device to detect changes to a storage device on the storage server that are made after the device was discovered.

Before you begin

The FCP device must be online.

About this task

The initial information about the available SCSI devices is discovered automatically when LUNs first become available.

Procedure

To update the information about a SCSI device issue a command of this form:

```
# echo <string> > /sys/bus/scsi/devices/<scsi_host_no>:0:<scsi_id>:<scsi_lun>/rescan
```

where <*string*> is any alphanumeric string and the other variables have the same meaning as in "Mapping the representations of SCSI devices in sysfs" on page 178.

Example

In the following example, the information about a SCSI device 1:0:18:1086537744 is updated:

```
# echo 1 > /sys/bus/scsi/devices/1:0:18:1086537744/rescan
```

Setting the SCSI command timeout

You can change the timeout if the default is not suitable for your storage system.

Before you begin

The FCP device must be online.

About this task

There is a timeout for SCSI commands. If the timeout expires before a SCSI command completes, error recovery starts. The default timeout is 30 seconds.

To find out the current timeout, read the `timeout` attribute of the SCSI device:

```
# cat /sys/bus/scsi/devices/<scsi_host_no>:0:<scsi_id>:<scsi_lun>/timeout
```

where the variables have the same meaning as in "Mapping the representations of SCSI devices in sysfs" on page 178.

The attribute value specifies the timeout in seconds.

Procedure

To set a different timeout, enter a command of this form:

```
# echo <timeout> > /sys/bus/scsi/devices/<scsi_host_no>:0:<scsi_id>:<scsi_lun>/timeout
```

where <*timeout*> is the new timeout in seconds.

Example

In the following example, the timeout of a SCSI device 1:0:18:1086537744 is first read and then set to 45 seconds:

```
# cat /sys/bus/scsi/devices/1:0:18:1086537744/timeout
30
# echo 45 > /sys/bus/scsi/devices/1:0:18:1086537744/timeout
```

Controlling the SCSI device state

You can use the `state` attribute of the SCSI device to set a SCSI device back online if it was set offline by error recovery.

Before you begin

The FCP device must be online.

About this task

If the connection to a storage system is working but the storage system has a problem, the error recovery might set the SCSI device offline. This condition is indicated by a message like "Device offlined - not ready after error recovery".

To find out the current state of the device, read the `state` attribute:

```
# cat /sys/bus/scsi/devices/<scsi_host_no>:0:<scsi_id>:<scsi_lun>/state
```

where the variables have the same meaning as in "Mapping the representations of SCSI devices in sysfs" on page 178. The state can be:

running
: The SCSI device can be used for running regular I/O requests.

cancel
: The data structure for the device is being removed.

deleted
: Follows the `cancel` state when the data structure for the device is being removed.

quiesce
: No I/O requests are sent to the device, only special requests for managing the device. This state is used when the system is suspended.

offline
: Error recovery for the SCSI device has failed.

blocked
: Error recovery is in progress and the device cannot be used until the recovery process is completed.

Procedure

To set an offline device online again, write `running` to the `state` attribute.

Issue a command of this form:

```
# echo running > /sys/bus/scsi/devices/<scsi_host_no>:0:<scsi_id>:<scsi_lun>/state
```

Example

In the following example, SCSI device 1:0:18:1086537744 is offline and is then set online again:

```
# cat /sys/bus/scsi/devices/1:0:18:1086537744/state
offline
# echo running > /sys/bus/scsi/devices/1:0:18:1086537744/state
```

Removing SCSI devices

How to remove a SCSI device depends on whether your environment is set up to use NPIV.

Important: Configuration changes can directly or indirectly affect information that is required to mount the root file system. Such changes require an update of the initrd of both the auxiliary kernel and the target kernel, followed by a re-write of the boot record (see "Rebuilding the initial RAM disk image" on page 58).

Removing automatically attached SCSI devices

When running with NPIV and the automatic LUN scan, you can temporarily delete a SCSI device by writing 1 to the `delete` attribute of the directory that represents the device in the sysfs SCSI branch.

About this task

See "Mapping the representations of SCSI devices in sysfs" on page 178 about how to find this directory.

Note: These steps delete the SCSI device only temporarily, until the next automatic or user triggered Linux SCSI target scan. The scan automatically adds the SCSI

devices again, unless the LUNs were deconfigured on the storage target. To permanently delete SCSI devices, you must disable automatic LUN scannning and configure all LUNs manually, see "Manually configured FCP LUNs and their SCSI devices" on page 176.

Procedure

Issue a command of this form:

```
# echo 1 > /sys/bus/scsi/devices/<device>/delete
```

Example

In this example, a SCSI device with LUN `0x4010403700000000` is to be removed. Before the device is deleted, the corresponding device in the sysfs SCSI branch is found with an **`lszfcp`** command.

```
# lszfcp -l 0x4010403700000000
0.0.3d0f/0x500507630300c567/0x4010403700000000 0:0:3:1
# echo 1 > /sys/bus/scsi/devices/0:0:3:1/delete
```

Removing manually configured FCP LUNs and their SCSI device

Use the `unit_remove` attribute of the appropriate target port to remove a SCSI device if your environment is not set up to use NPIV or if you disabled automatic LUN scan.

For details about disabling automatic LUN scan, see "Setting up the zfcp device driver" on page 159.

Before you begin

Attention: Use this procedure only to dynamically test configuration settings.

To configure persistent setting in a production system, use one of the following options:

- The YaST GUI **`yast2 zfcp`**
- The text-based interface **`yast zfcp`**
- The command line, use **`zfcp_disk_configure`**

See the section about IBM z Systems hard disk configuration in the *SUSE Linux Enterprise Server 12 SP3 Deployment Guide*, and the procedure about configuring a zFCP disk in *SUSE Linux Enterprise Server 12 SP3 Administration Guide*. The command-line tools described work not only inside the rescue environment but also in a regularly installed Linux instance.

Procedure

Follow these steps to remove a manually configured FCP LUN and its SCSI device:

1. Optional: To manually unregister the SCSI device, write `1` to the `delete` attribute of the directory that represents the device in the sysfs SCSI branch. See "Mapping the representations of SCSI devices in sysfs" on page 178 for information about how to find this directory. Issue a command of this form:

   ```
   # echo 1 > /sys/bus/scsi/devices/<device>/delete
   ```

2. Remove the SCSI device from the target port by writing the LUN of the device to the `unit_remove` attribute of the port. Issue a command of this form:

```
# echo <fcp_lun> > /sys/bus/ccw/drivers/zfcp/<device_bus_id>/<wwpn>/unit_remove
```

where:

<fcp_lun>
: is the LUN of the SCSI device to be configured. The LUN is a 16 digit hexadecimal value padded with zeros, for example 0x4010403300000000.

<device_bus_id>
: specifies the FCP device.

<wwpn>
: is the WWPN of the target port.

Removing a LUN with `unit_remove` automatically unregisters the SCSI device first.

Example

The following example removes a SCSI device with LUN 0x4010403200000000, accessed through a target port with WWPN 0x500507630300c562 and is attached through an FCP device with bus ID 0.0.3d0c. The corresponding directory in the sysfs SCSI branch is assumed to be `/sys/bus/scsi/devices/0:0:1:1`.

1. Optionally, unregister the device:

```
# echo 1 > /sys/bus/scsi/devices/0:0:1:1/delete
```

2. Remove the device (if not done in previous step) and the LUN:

```
# echo 0x4010403200000000 > /sys/bus/ccw/drivers/zfcp/0.0.3d0c/0x500507630300c562/unit_remove
```

Confirming end-to-end data consistency checking

There are different types of end-to-end data consistency checking, with dependencies on hardware and software.

About this task

End-to-end data consistency checking is based on a data integrity field (DIF) that is added to transferred data blocks. DIF data is used to confirm that a data block originates from the expected source and was not modified during the transfer between the storage system and the FCP device. The SCSI standard defines several types of DIF. Data integrity extension (DIX) builds on DIF to extend consistency checking, for example, to the operating system, middleware, or an application.

If the zfcp device driver is loaded with the dif=1 module parameter, Linux automatically discovers which FCP devices and which SCSI devices support end-to-end data consistency checking. No further setup is required.

Note: SCSI devices for which end-to-end data consistency checking is enabled must be accessed with direct I/O. Direct I/O requires direct access through the block device or through a file system that fully supports end-to-end data consistency checking. For example, XFS provides this support. Expect error messages about invalid checksums when you use other access methods.

The zfcp device driver supports the following modes:

- The FCP device calculates and checks a DIF checksum (DIF type 1)
- The Linux block integrity layer calculates and checks a TCP/IP checksum, which the FCP device then translates to a DIF checksum (DIX type 1 with DIF type 1)

For SCSI devices for which end-to-end data consistency checking is used, there is a sysfs directory

`/sys/block/sd<x>/integrity`

In the path, `sd<x>` is the standard name of the SCSI device.

End-to-end data consistency checking is used only if all of the following components support end-to-end data consistency checking:

SCSI disk
: Check your storage server documentation about T10 DIF support and any restrictions.

z Systems hardware
: z Systems FCP adapter hardware supports end-to-end data consistency checking as of FICON Express8.

Hypervisor
: For Linux on z/VM, you require a z/VM version with guest support for end-to-end data consistency checking.

FCP device
: Check your FCP adapter hardware documentation about the support and any restrictions. For example, end-to-end data consistency checking might be supported only for disks with 512-byte block size.

Read the `prot_capabilities` sysfs attribute of the SCSI host that is associated with an FCP device to find out about its end-to-end data consistency checking support. The following values are possible:

0 The FCP device does not support end-to-end data consistency checking.

1 The FCP device supports DIF type 1.

16 The FCP device supports DIX type 1.

17 The FCP device supports DIX type 1 with DIF type 1.

Procedure

Issue a command of this form:

```
# cat /sys/bus/ccw/devices/<device_bus_id>/host<n>/scsi_host/host<n>/prot_capabilities
```

where <*device_bus_id*> identifies the FCP device and <*n*> is an integer that identifies the corresponding SCSI host.

Example

```
# cat /sys/bus/ccw/devices/0.0.1940/host0/scsi_host/host0/prot_capabilities
17
```

Scenario for finding available LUNs

There are several steps from setting an FCP device online to listing the available LUNs.

Before you begin

Alternatively to this procedure, you can use one of the following options to discover FCP devices, remote ports, and available LUNs:

- The YaST GUI **yast2 zfcp**
- The text-based interface **yast zfcp**
- The command-line tool **zfcp_san_disc** (does not list FCP devices)

See the section about IBM z Systems hard disk configuration in the *SUSE Linux Enterprise Server 12 SP3 Deployment Guide*.

Procedure

1. Check for available FCP devices of type 1732/03:

```
# lscss -t 1732/03
Device   Subchan.  DevType CU Type Use  PIM PAM POM  CHPIDs
----------------------------------------------------------------------
0.0.3c02 0.0.0015  1732/03 1731/03      80  80  ff   36000000 00000000
```

   Another possible type would be, for example, 1732/04.

2. Set the FCP device online:

```
# chccwdev 0.0.3c02 --online
```

   A port scan is performed automatically when the FCP device is set online.

3. Optional: Confirm that the FCP device is available and online:

```
# lszfcp -b 0.0.3c02 -a
0.0.3c02 host0
Bus = "ccw"
    availability        = "good"
...
    failed              = "0"
...
    in_recovery         = "0"
...
    online              = "1"
...
```

4. Optional: List the available ports:

```
# lszfcp -P
0.0.3c02/0x50050763030bc562 rport-0:0-0
0.0.3c02/0x500507630310c562 rport-0:0-1
0.0.3c02/0x500507630040727b rport-0:0-10
0.0.3c02/0x500507630e060521 rport-0:0-11
...
```

5. Scan for available LUNs on FCP device 0.0.3c02, port 0x50050763030bc562:

```
# lsluns -c 0.0.3c02 -p 0x50050763030bc562
Scanning for LUNs on adapter 0.0.3c02
        at port 0x50050763030bc562:
                0x4010400000000000
                0x4010400100000000
                0x4010400200000000
                0x4010400300000000
                0x4010400400000000
                0x4010400500000000
                0x4010400600000000
                ...
```

zfcp HBA API support

You require different libraries for developing and running HBA management client applications. To develop applications, you need the development version of the SNIA HBA API library. To run applications, you need the zFCP HBA API library.

Developing applications

To develop applications, you must install the development version of the SNIA HBA API provided by the `libHBAAPI2-devel` RPM, link your application against the library, and load the library.

Procedure

1. Install the development RPM for the SNIA HBA API. Use, for example, zypper:

   ```
   # zypper install libHBAAPI2-devel
   ```

   The development RPM `libHBAAPI2-devel` provides the necessary header files and .so symbolic links needed to program against the SNIA HBA API.
2. Add the command-line option `-lHBAAPI` during the linker step of the build process to link your application against the SNIA HBA API library.
3. In the application, issue the **`HBA_LoadLibrary()`** call as the first call to load the library. The vendor-specific library **`libzfcphbaapi0`**, in turn, supplies the function **`HBA_RegisterLibrary`** that returns all function pointers to the common library and thus makes them available to the application.

Functions provided

The zfcp HBA API implements Fibre Channel - HBA API (FC-HBA) functions as defined in the FC-HBA specification.

You can find the FC-HBA specification at www.t11.org. The following functions are available:

- HBA_CloseAdapter()
- HBA_FreeLibrary()
- HBA_GetAdapterAttributes()
- HBA_GetAdapterName()
- HBA_GetAdapterPortAttributes()
- HBA_GetDiscoveredPortAttributes()
- HBA_GetEventBuffer()
- HBA_GetFcpTargetMapping()
- HBA_GetFcpTargetMappingV2()
- HBA_GetNumberOfAdapters()
- HBA_GetRNIDMgmtInfo()
- HBA_GetVersion()
- HBA_LoadLibrary()

- HBA_OpenAdapter()
- HBA_RefreshAdapterConfiguration()
- HBA_RefreshInformation()
- HBA_RegisterForAdapterAddEvents()
- HBA_RegisterForAdapterEvents()
- HBA_RegisterForAdapterPortEvents()
- HBA_RegisterForAdapterPortStatEvents()
- HBA_RegisterForLinkEvents()
- HBA_RegisterForTargetEvents()
- HBA_RegisterLibrary()
- HBA_RegisterLibraryV2()
- HBA_RemoveCallback()
- HBA_SendCTPassThru()
- HBA_SendCTPassThruV2()
- HBA_SendLIRR()
- HBA_SendReadCapacity()
- HBA_SendReportLUNs()
- HBA_SendReportLUNsV2()
- HBA_SendRNID()
- HBA_SendRNIDV()
- HBA_SendRPL()
- HBA_SendRPS()
- HBA_SendScsiInquiry()
- HBA_SendSRL()
- HBA_SetRNIDMgmtInfo()

All other FC-HBA functions return status code HBA_STATUS_ERROR_NOT_SUPPORTED where possible.

Note: zFCP HBA API for Linux 3.12 can access only FCP devices, ports, and units that are configured in the operating system.

Getting ready to run applications

To run an application, you must install the zFCP HBA API library that is provided by the `libzfcphbaapi0` RPM. You can set environment variables to log any errors in the library, and use tools to investigate the SAN configuration.

Before you begin

To use the HBA API support, you need the following packages:

- The zFCP HBA API library RPM, `libzfcphbaapi0`
- The SNIA HBA API library RPM, `libHBAAPI2`

Installing `libzfcphbaapi0` automatically installs `libHBAAPI2` as a dependency.

The application must be developed to use the SNIA HBA API library, see "Developing applications" on page 191.

Procedure

Follow these steps to access the library from a client application:

1. Install the `libzfcphbaapi0` RPM with **zypper**. **Zypper** automatically installs all dependent packages. For example:

```
# zypper install libzfcphbaapi0
```

2. Ensure that the `/etc/hba.conf` file exists and contains a line of the form:
   <library name> <library pathname>

   For example:
   `com.ibm.libzfcphbaapi /usr/lib64/libzfcphbaapi.so.0`

   The SNIA library requires a configuration file called `/etc/hba.conf` that contains the path to the vendor-specific library `libzfcphbaapi.so`.
3. Optional: Set the environment variables for logging errors. The zfcp HBA API support uses the following environment variables to log errors in the zfcp HBA API library:

   LIB_ZFCP_HBAAPI_LOG_LEVEL
   specifies the log level. If not set or set to zero, there is no logging (default). If set to an integer value greater than 1, logging is enabled.

   LIB_ZFCP_HBAAPI_LOG_FILE
   specifies a file for the logging output. If not specified, stderr is used.

What to do next

You can use the **zfcp_ping** and **zfcp_show** commands to investigate your SAN configuration.

Tools for investigating your SAN configuration

As of version 2.1, the HBA API package includes the following tools that can help you to investigate your SAN configuration and to solve configuration problems.

zfcp_ping
to probe a port in the SAN.

zfcp_show
to retrieve information about the SAN topology and details about the SAN components.

See *How to use FC-attached SCSI devices with Linux on z Systems*, SC33-8413 for details.

Chapter 11. Storage-class memory device driver supporting Flash Express

The storage-class memory device driver provides support of Flash Express.

The Flash Express memory is accessed as storage-class memory increments through extended asynchronous data mover (EADM) subchannels. Each increment is represented in Linux by a block device.

What you should know about storage-class memory

Storage-class memory (SCM) is a class of data storage devices that combines properties of both storage and memory.

To access storage-class memory from within an LPAR, one or more increments must be added to the I/O configuration of the LPAR. At least one EADM subchannel must be available to this LPAR. Because SCM supports multiple concurrent I/O requests, it is advantageous to configure multiple EADM subchannels. A typical number of EADM subchannels is 64.

Each increment is available for use through a device node as a block device. You can use the block device with standard Linux tools as you would use any other block device. Commonly used tools that work with block devices include: **fdisk**, **mkfs**, and **mount**.

Storage-class memory is useful for workloads with large write operations, that is, with a block size of 256 KB or more of data. Write operations with a block size of less than 256 KB of data might not perform optimally. Read operations can be of any size.

Storage-class memory device nodes

Applications access storage-class memory devices by device nodes. SUSE Linux Enterprise Server creates a device node for each storage increment. Alternatively, use the **mknod** command to create one.

The device driver uses a device name of the form `/dev/scm`<*x*> for an entire block device. In the name, <*x*> is one or two lowercase letters.

You can partition a block device into up to seven partitions. If you use partitions, the device driver numbers them from 1 - 7. The partitions then have device nodes of the form `/dev/scm`<*x*><*n*>, where <*n*> is a number in the range 1 - 7, for example `/dev/scma1`.

The following example shows two block devices, `scma` and `scmb`, where `scma` has one partition, `scma1`.

```
# lsblk
NAME     MAJ:MIN RM   SIZE RO MOUNTPOINT
scma     252:0    0    16G  0
`-scma1  252:1    0    16G  0
scmb     252:8    0    16G  0
```

Be sure to load the `scm_block` before you check for the device node.

To check whether there already is a node, use, for example, **lsblk** to list all block devices and look for "scm" entries.

To create storage-class memory device nodes, issue commands of the form:

```
# mknod /dev/scma1 b <major> 1
# mknod /dev/scma2 b <major> 2
# mknod /dev/scma3 b <major> 3
...
```

Setting up the storage-class memory device driver

Configure the storage-class memory device driver by using the module parameters.

Storage-class memory module parameter syntax

```
                                 ┌ nr_requests=64 ──┐   ┌ write_cluster_size=64 ──┐
►►──modprobe──scm_block──────────┤                  ├───┤                         ├──────────►
                                 └ nr_requests=<num>┘   └ write_cluster_size=<num>┘

  ┌ nr_request_per_io=8 ──┐
►─┤                       ├──────────────────────────────────────────────────────────────►◄
  └ nr_request_per_io=<num>┘
```

where

nr_requests
: specifies the number of parallel I/O requests. Set this number to the number of EADM subchannels. The default is 64.

write_cluster_size
: specifies the number of pages that are used by the read-modify-write algorithm. The default is 64, resulting in that all write requests smaller than 256 KiB are translated to 256 KiB writes. 1 KiB is 1024 bytes.

nr_request_per_io
: submits more concurrent I/O requests than the current limit, which is based on the number of available EADM subchannels (64). Valid values are in the range 1 to 64. Increasing the requests increases the number of I/O requests per second, especially for requests with a small block size. The default number of requests is 8. Depending on the workload, this setting might improve the throughput of the scm_block driver.

Working with storage-class memory increments

You can list storage-class memory increments and EADM subchannels.

- "Show EADM subchannels"
- "Listing storage-class memory increments" on page 197
- "Combining SCM devices with LVM" on page 197

Show EADM subchannels

Use the **lscss** command to list EADM subchannels.

About this task

The extended asynchronous data mover (EADM) subchannels are used to transfer data to and from the storage-class memory. At least one EADM subchannel must be available to the LPAR.

Procedure

To list EADM subchannels, issue:

```
# lscss --eadm
Device   Subchan.
-----------------
n/a      0.0.ff00
n/a      0.0.ff01
n/a      0.0.ff02
n/a      0.0.ff03
n/a      0.0.ff04
n/a      0.0.ff05
n/a      0.0.ff06
n/a      0.0.ff07
```

For more information about the **lscss** command, see "lscss - List subchannels" on page 590.

Listing storage-class memory increments

Use the **lsscm** command to see the status and attributes of storage-class memory increments.

About this task

Each storage-class memory increment can be accessed as a block device through a device node `/dev/scm<x>`. Optionally, you can partition a storage-class memory increment in up to seven partitions.

You can also use the **lsblk** command to list all block devices.

Procedure

To list all storage-class memory increments, their status, and attributes, issue:

```
# lsscm
SCM Increment    Size    Name  Rank D_state O_state Pers ResID
-----------------------------------------------------------------
0000000000000000 16384MB scma     1       2       1    2     1
0000000400000000 16384MB scmb     1       2       1    2     1
```

See "lsscm - List storage-class memory increments" on page 606 for details about the **lsscm** command.

Combining SCM devices with LVM

You can use LVM to combine multiple SCM block devices into an arbitrary sized LVM device.

Example

Configure SCM as any other block devices in LVM. If your version of LVM does not accept SCM devices as valid LVM device types and issues an error message, add the SCM devices to the LVM configuration file `/etc/lvm/lvm.conf`. Add the following line to the section labeled “devices”:

```
types = [ "scm", 8 ]
```

Chapter 12. Channel-attached tape device driver

The tape device driver supports channel-attached tape devices on SUSE Linux Enterprise Server 12 SP3 for z Systems.

SCSI tape devices that are attached through an FCP channel are handled by the zfcp device driver (see Chapter 10, "SCSI-over-Fibre Channel device driver," on page 153).

Features

The tape device driver supports a range of channel-attached tape devices and functions of these devices.

- The tape device driver supports channel-attached tape drives that are compatible with IBM 3480, 3490, 3590, and 3592 magnetic tape subsystems. Various models of these device types are handled (for example, the 3490/10).

  3592 devices that emulate 3590 devices are recognized and treated as 3590 devices.
- Logical character devices for non-rewinding and rewinding modes of operation (see "Tape device modes and logical devices").
- Control operations through **mt** (see "Using the mt command" on page 201)
- Message display support (see "tape390_display - display messages on tape devices and load tapes" on page 657)
- Encryption support (see "tape390_crypt - Manage tape encryption" on page 653)
- Up to 128 physical tape devices

What you should know about channel-attached tape devices

A naming scheme helps you to keep track of your tape devices, their modes of operation, and the corresponding device nodes.

Tape device modes and logical devices

The tape device driver supports up to 128 physical tape devices. Each physical tape device can be used as a character device in non-rewinding or in rewinding mode.

In non-rewinding mode, the tape remains at the current position when the device is closed. In rewinding mode, the tape is rewound when the device is closed. The tape device driver treats each mode as a separate logical device.

Both modes provide sequential (traditional) tape access without any caching done in the kernel.

You can use a channel-attached tape device in the same way as any other Linux tape device. You can write to it and read from it using standard Linux facilities such as GNU **tar**. You can perform control operations (such as rewinding the tape or skipping a file) with the standard tool **mt**.

Tape naming scheme

The tape device driver assigns minor numbers along with an index number when a physical tape device comes online.

The naming scheme for tape devices is summarized in Table 30.

Table 30. Tape device names and minor numbers

Device	Names	Minor numbers
Non-rewinding character devices	ntibm<*n*>	2×<*n*>
Rewinding character devices	rtibm<*n*>	2×<*n*>+1

where <*n*> is the index number that is assigned by the device driver. The index starts from 0 for the first physical tape device, 1 for the second, and so on. The name space is restricted to 128 physical tape devices, so the maximum index number is 127 for the 128th physical tape device.

The index number and corresponding minor numbers and device names are not permanently associated with a specific physical tape device. When a tape device goes offline, it surrenders its index number. The device driver assigns the lowest free index number when a physical tape device comes online. An index number with its corresponding device names and minor numbers can be reassigned to different physical tape devices as devices go offline and come online.

Tip: Use the **`lstape`** command (see "lstape - List tape devices" on page 609) to determine the current mapping of index numbers to physical tape devices.

When the tape device driver is loaded, it dynamically allocates a major number to channel-attached character tape devices. A different major number might be used when the device driver is reloaded, for example when Linux is rebooted.

For online tape devices, directories provide information about the major/minor assignments. The directories have the form:
- `/sys/class/tape390/ntibm<n>`
- `/sys/class/tape390/rtibm<n>`

Each of these directories has a `dev` attribute. The value of the `dev` attribute has the form <*major*>:<*minor*>, where <*major*> is the major number for the device and <*minor*> is the minor number specific to the logical device.

Example

In this example, four physical tape devices are present, with three of them online. The TapeNo column shows the index number and the BusID column indicates the associated physical tape device. In the example, no index number is allocated to the tape device in the last row. The device is offline and, currently, no names and minor numbers are assigned to it.

```
# lstape --ccw-only
TapeNo  BusID      CuType/Model DevType/DevMod  BlkSize State   Op      MedState
0       0.0.01a1   3490/10      3490/40         auto    UNUSED  ---     UNLOADED
1       0.0.01a0   3480/01      3480/04         auto    UNUSED  ---     UNLOADED
2       0.0.0172   3590/50      3590/11         auto    IN_USE  ---     LOADED
N/A     0.0.01ac   3490/10      3490/40         N/A     OFFLINE ---     N/A
```

Table 31 on page 201 summarizes the resulting names and minor numbers.

Table 31. Example names and minor numbers

Bus ID	Index (TapeNo)	Device	Device name	Minor number
0.0.01a1	0	non-rewind	ntibm0	0
		rewind	rtibm0	1
0.0.01a0	1	non-rewind	ntibm1	2
		rewind	rtibm1	3
0.0.0172	2	non-rewind	ntibm2	4
		rewind	rtibm2	5
0.0.01ac	not assigned	n/a	n/a	not assigned

For the online devices, the major/minor assignments can be read from their respective representations in `/sys/class`:

```
# cat /sys/class/tape390/ntibm0/dev
254:0
# cat /sys/class/tape390/rtibm0/dev
254:1
# cat /sys/class/tape390/ntibm1/dev
254:2
# cat /sys/class/tape390/rtibm1/dev
254:3
# cat /sys/class/tape390/ntibm2/dev
254:4
# cat /sys/class/tape390/rtibm2/dev
254:5
```

In the example, the major number is 254. The minor numbers are as expected for the respective device names.

Tape device nodes

Applications access tape devices by device nodes. SUSE Linux Enterprise Server 12 SP3 uses udev to create two device nodes for each tape device.

The device nodes have the form `/dev/<name>`, where <*name*> is the device name according to "Tape naming scheme" on page 200.

For example, if you have two tape devices, udev creates the device nodes that are shown in Table 32:

Table 32. Tape device nodes

Node for	non-rewind device	rewind device
First tape device	`/dev/ntibm0`	`/dev/rtibm0`
Second tape device	`/dev/ntibm1`	`/dev/rtibm1`

Using the mt command

There are differences between the MTIO interface for channel-attached tapes and other tape drives. Correspondingly, some operations of the **mt** command are different for channel-attached tapes.

The **mt** command handles basic tape control in Linux. See the man page for general information about **mt**.

setdensity
has no effect because the recording density is automatically detected on channel-attached tape hardware.

drvbuffer
has no effect because channel-attached tape hardware automatically switches to unbuffered mode if buffering is unavailable.

lock and unlock
have no effect because channel-attached tape hardware does not support media locking.

setpartition and mkpartition
have no effect because channel-attached tape hardware does not support partitioning.

status returns a structure that, aside from the block number, contains mostly SCSI-related data that does not apply to the tape device driver.

load does not automatically load a tape but waits for a tape to be loaded manually.

offline and rewoffl and eject
all include expelling the currently loaded tape. Depending on the stacker mode, it might attempt to load the next tape (see "Loading and unloading tapes" on page 206 for details).

Loading the tape device driver

There are no module parameters for the tape device driver. SUSE Linux Enterprise Server 12 SP3 loads the required device driver module for you when a device becomes available.

You can also load the modules with the **modprobe** command.

Tape module syntax

```
►►─modprobe──┬─ tape_34xx ─┬──────────────────────────────────────►◄
             └─ tape_3590 ─┘
```

See the **modprobe** man page for details on **modprobe**.

Working with tape devices

Typical tasks for working with tape devices include displaying tape information, controlling compression, and loading and unloading tapes.

For information about working with the channel measurement facility, see Chapter 44, "Channel measurement facility," on page 463.

For information about displaying messages on a tape device's display unit, see "tape390_display - display messages on tape devices and load tapes" on page 657.

See “Working with newly available devices” on page 10 to avoid errors when working with devices that have become available to a running Linux instance.

- “Setting a tape device online or offline”
- “Displaying tape information” on page 204
- “Enabling compression” on page 206
- “Loading and unloading tapes” on page 206

Setting a tape device online or offline

Set a tape device online or offline with the **chccwdev** command or through the `online` sysfs attribute of the device.

About this task

Setting a physical tape device online makes both corresponding logical devices accessible:

- The non-rewind character device
- The rewind character device

At any time, the device can be online to a single Linux instance only. You must set the tape device offline to make it accessible to other Linux instances in a shared environment.

Procedure

Use the **chccwdev** command (see “chccwdev - Set CCW device attributes” on page 500) to set a tape online or offline.
Alternatively, you can write 1 to the online attribute of the device to set it online; or write `0` to set it offline.

Results

When a physical tape device is set online, the device driver assigns an index number to it. This index number is used in the standard device nodes (see “Tape device nodes” on page 201) to identify the corresponding logical devices. The index number is in the range 0 - 127. A maximum of 128 physical tape devices can be online concurrently.

If you are using the standard device nodes, you must find out the index number that the tape device driver assigned to your tape device. This index number, and consequently the associated standard device node, can change after a tape device was set offline and back online.

If you need to know the index number, issue a command of this form:

```
# lstape --ccw-only <device_bus_id>
```

where <*device_bus_id*> is the device bus-ID that corresponds to the physical tape device. The index number is the value in the TapeNo column of the command output. For more information about the **lstape** command, see “lstape - List tape devices” on page 609.

Examples

- To set a physical tape device with device bus-ID 0.0.015f online, issue:

```
# chccwdev -e 0.0.015f
```

  or

```
# echo 1 > /sys/bus/ccw/devices/0.0.015f/online
```

  To find the index number that the tape device driver assigned to the device, issue:

```
# lstape 0.0.015f --ccw-only
TapeNo  BusID      CuType/Model DevType/Model   BlkSize State   Op      MedState
2       0.0.015f   3480/01      3480/04         auto    UNUSED  ---     LOADED
```

  In the example, the assigned index number is 2. The standard device nodes for working with the device until it is set offline are then:
  - `/dev/ntibm2` for the non-rewinding device
  - `/dev/rtibm2` for the rewinding device
- To set a physical tape device with device bus-ID 0.0.015f offline, issue:

```
# chccwdev -d 0.0.015f
```

  or

```
# echo 0 > /sys/bus/ccw/devices/0.0.015f/online
```

Displaying tape information

Use the **lstape** command to display summary information about your tape devices, or read tape information from sysfs.

Alternatively, you can read tape information from sysfs. Each physical tape device is represented in a sysfs directory of the form
`/sys/bus/ccw/devices/<device_bus_id>`

where *<device_bus_id>* is the device bus-ID that corresponds to the physical tape device. This directory contains a number of attributes with information about the physical device. The attributes: blocksize, state, operation, and medium_state, might not show the current values if the device is offline.

Table 33. Tape device attributes

Attribute	Explanation
online	1 if the device is online or 0 if it is offline (see "Setting a tape device online or offline" on page 203)
cmb_enable	1 if channel measurement block is enabled for the physical device or 0 if it is not enabled (see Chapter 44, "Channel measurement facility," on page 463)
cutype	Type and model of the control unit
devtype	Type and model of the physical tape device

Table 33. Tape device attributes (continued)

Attribute	Explanation
blocksize	Currently used block size in bytes or `0` for auto
state	State of the physical tape device, either of: **UNUSED** Device is not in use and is available to any operating system image in a shared environment **IN_USE** Device is being used as a character device by a process on this Linux image **OFFLINE** The device is offline. **NOT_OP** Device is not operational
operation	The current tape operation, for example: **---** No operation **WRI** Write operation **RFO** Read operation **MSN** Medium sense Several other operation codes exist, for example, for rewind and seek.
medium_state	The current state of the tape cartridge: **1** Cartridge is loaded into the tape device **2** No cartridge is loaded **0** The tape device driver does not have information about the current cartridge state

Procedure

Issue a command of this form to read an attribute:

```
# cat /sys/bus/ccw/devices/<device_bus_id>/<attribute>
```

where <*attribute*> is one of the attributes of Table 33 on page 204.

Example

The following **`lstape`** command displays information about a tape device with bus ID 0.0.015f:

```
# lstape 0.0.015f --ccw-only
TapeNo  BusID      CuType/Model DevType/Model   BlkSize State   Op      MedState
2       0.0.015f   3480/01      3480/04         auto    UNUSED  ---     LOADED
```

This sequence of commands reads the same information from sysfs:

```
# cat /sys/bus/ccw/devices/0.0.015f/online
1
# cat /sys/bus/ccw/devices/0.0.015f/cmb_enable
0
# cat /sys/bus/ccw/devices/0.0.015f/cutype
3480/01
# cat /sys/bus/ccw/devices/0.0.015f/devtype
3480/04
# cat /sys/bus/ccw/devices/0.0.015f/blocksize
0
# cat /sys/bus/ccw/devices/0.0.015f/state
UNUSED
# cat /sys/bus/ccw/devices/0.0.015f/operation
---
# cat /sys/bus/ccw/devices/0.0.015f/medium_state
1
```

Enabling compression

Control Improved Data Recording Capability (IDRC) compression with the **mt** command provided by the RPM mt_st.

About this task

Compression is off after the tape device driver is loaded.

Procedure

To enable compression, issue:

```
# mt -f <node> compression
```

or

```
# mt -f <node> compression 1
```

where <*node*> is the device node for a character device, for example, `/dev/ntibm0`. To disable compression, issue:

```
# mt -f <tape> compression 0
```

Any other numeric value has no effect, and any other argument disables compression.

Example

To enable compression for a tape device with a device node `/dev/ntibm0` issue:

```
# mt -f /dev/ntibm0 compression 1
```

Loading and unloading tapes

Unload tapes with the **mt** command. How to load tapes depends on the stacker mode of your tape hardware.

Procedure

Unload tapes by issuing a command of this form:

```
# mt -f <node> unload
```

where <*node*> is one of the character device nodes.
Whether you can load tapes from your Linux instance depends on the stacker mode of your tape hardware. There are three possible modes:

manual
: Tapes must always be loaded manually by an operator. You can use the **tape390_display** command (see "tape390_display - display messages on tape devices and load tapes" on page 657) to display a short message on the tape device's display unit when a new tape is required.

automatic
: If there is another tape present in the stacker, the tape device automatically loads a new tape when the current tape is expelled. You can load a new tape from Linux by expelling the current tape with the **mt** command.

system
: The tape device loads a tape when instructed from the operating system. From Linux, you can load a tape with the **tape390_display** command (see "tape390_display - display messages on tape devices and load tapes" on page 657). You cannot use the **mt** command to load a tape.

Example

To expel a tape from a tape device that can be accessed through a device node `/dev/ntibm0`, issue:

```
# mt -f /dev/ntibm0 unload
```

Assuming that the stacker mode of the tape device is `system` and that a tape is present in the stacker, you can load a new tape by issuing:

```
# tape390_display -l "NEW TAPE" /dev/ntibm0
```

"NEW TAPE" is a message that is displayed on the tape devices display unit until the tape device receives the next tape movement command.

Chapter 13. XPRAM device driver

With the XPRAM block device driver SUSE Linux Enterprise Server 12 SP3 for z Systems can access expanded storage. XPRAM can be used as a basis for fast swap devices or for fast file systems.

Expanded storage can be swapped in or out of the main storage in 4 KB blocks. All XPRAM devices provide a block size of 4096 bytes.

XPRAM features

The XPRAM device driver automatically detects expanded storage and supports expanded storage partitions.

- If expanded storage is not available, XPRAM fails gracefully with a log message that reports the absence of expanded storage.
- The expanded storage can be divided into up to 32 partitions.

What you should know about XPRAM

There is a device node for each XPRAM partition. Expanded storage persists across reboots and, with suitable boot parameters, the stored data can be accessed by the rebooted Linux instance.

XPRAM partitions and device nodes

The XPRAM device driver uses major number 35. The standard device names are of the form slram<*n*>, where <*n*> is the corresponding minor number.

You can use the entire available expanded storage as a single XPRAM device or divide it into up to 32 partitions. Each partition is treated as a separate XPRAM device.

If the entire expanded storage is used a single device, the device name is slram0. For partitioned expanded storage, the <*n*> in the device name denotes the (n+1)th partition. For example, the first partition is called slram0, the second slram1, and the 32nd partition is called slram31.

Table 34. XPRAM device names, minor numbers, and partitions

Minor	Name	To access
0	slram0	the first partition or the entire expanded storage if there are no partitions
1	slram1	the second partition
2	slram2	the third partition
... <n> ...	... slram<n> ...	... the (<n>+1)th partition ...
31	slram31	the 32nd partition

The device nodes that you need to access these partitions are created by udev when you load the XPRAM device driver module. The nodes are of the form

/dev/slram<*n*>, where <*n*> is the index number of the partition. In addition, to the device nodes udev creates a symbolic link of the form /dev/xpram<*n*> that points to the respective device node.

XPRAM use for diagnosis

Expanded storage persists across reboots, which makes it suitable for storing diagnostic information.

Issuing an IPL command to reboot Linux does not reset expanded storage. Expanded storage is persistent across IPLs and can be used, for example, to store diagnostic information. The expanded storage is reset when the z/VM guest virtual machine is logged off or when the LPAR is deactivated.

Reusing XPRAM partitions

You might be able to reuse existing file systems or swap devices on an XPRAM device or partition after reloading the XPRAM device driver (for example, after rebooting Linux).

For file systems or swap devices to be reusable, the XPRAM kernel or module parameters for the new device or partition must match the parameters of the previous use of XPRAM.

If you change the XPRAM parameters, you must create a new file system or a new swap device for each changed partition. A device or partition is considered changed if its size has changed. All partitions that follow a changed partition are also considered changed even if their sizes are unchanged.

Setting up the XPRAM device driver

The XPRAM device driver is loaded automatically after extended memory has been configured with YaST. You can also configure extended memory and load the XPRAM device driver independently of YaST.

You can optionally partition the available expanded storage by using the devs and sizes module parameters when you load the xpram module.

XPRAM module parameter syntax

```
►►──modprobe── xpram──┬──────────────────────────────────────────────────────┬──►◄
                      └─ devs=<number_of_partitions>──┬──────────────────────┬─┘
                                                      │        ┌──────────┐  │
                                                      │        ↓          │  │
                                                      └─ sizes=──<partition_size>──┘
```

where:

<number_of_partitions>
: is an integer in the range 1 - 32 that defines how many partitions the expanded storage is split into.

<partition_size>
: specifies the size of a partition. The i-th value defines the size of the i-th partition.

Each size is a non-negative integer that defines the size of the partition in KB or a blank. Only decimal values are allowed and no magnitudes are accepted.

You can specify up to <*number_of_partitions*> values. If you specify fewer values than <*number_of_partitions*>, the missing values are interpreted as blanks. Blanks are treated like zeros.

Any partition that is defined with a non-zero size is allocated the amount of memory that is specified by its size parameter.

Any remaining memory is divided as equally as possible among any partitions with a zero or blank size parameter. Dividing the remaining memory is subject to the following constraints:

- Blocks must be allocated in multiples of 4 K.
- Addressing constraints might leave un-allocated areas of memory between partitions.

See the **modprobe** man page for details about **modprobe**.

Examples

- The following specification allocates the extended storage into four partitions. Partition 1 has 2 GB (2097152 KB), partition 4 has 4 GB (4194304 KB), and partitions 2 and 3 use equal parts of the remaining storage. If the total amount of extended storage was 16 GB, then partitions 3 and 4 would each have approximately 5 GB.

```
# modprobe xpram devs=4 sizes=2097152,0,0,4194304
```

- The following specification allocates the extended storage into three partitions. The partition 2 has 512 KB and the partitions 1 and 3 use equal parts of the remaining extended storage.

```
# modprobe xpram devs=3 sizes=,512
```

- The following specification allocates the extended storage into two partitions of equal size.

```
# modprobe xpram devs=2
```

Part 4. Networking

There are several z Systems specific network device drivers for SUSE Linux Enterprise Server 12 SP3 for z Systems.

Newest version

You can find the newest version of this publication on IBM Knowledge Center at www.ibm.com/support/knowledgecenter/linuxonibm/liaaf/lnz_r_suse.html

Restrictions

For prerequisites and restrictions see the z Systems architecture specific information in the SUSE Linux Enterprise Server 12 SP3 release notes at www.suse.com/releasenotes

Example

An example network setup that uses some available network setup types is shown in Figure 33 on page 214.

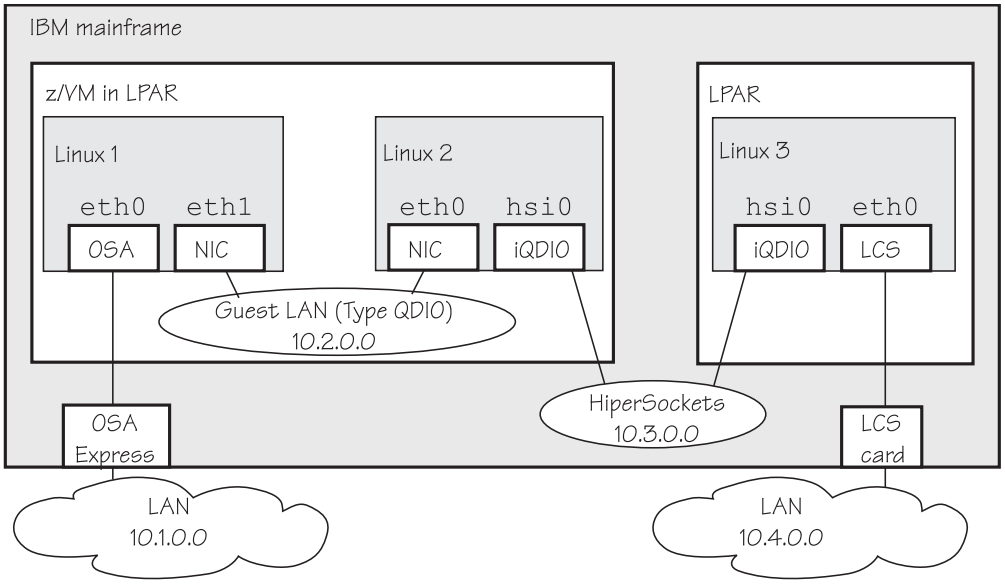

Figure 33. Networking example

In the example there are three Linux instances; two of them run as z/VM guests in one LPAR and a third Linux instance runs in another LPAR. Within z/VM, Linux instances can be connected through a guest LAN or VSWITCH. Within and between LPARs, you can connect Linux instances through HiperSockets. OSA-Express cards running in either non-QDIO mode (called LCS here) or in QDIO mode can connect the mainframe to an external network.

Table 35 lists which control units and device type combinations are supported by the network device drivers.

Table 35. Supported device types, control units, and corresponding device drivers

Device type	Control unit	Device driver	Comment
1732/01	1731/01	qeth	OSA configured as OSD
1732/02	1731/02	qeth	OSA configured as OSX
1732/03	1731/02	qeth	OSA configured as OSM
1732/05	1731/05	qeth	HiperSockets
0000/00	3088/01	lcs	P/390
0000/00	3088/08	ctcm	Virtual CTC under z/VM
0000/00	3088/1e	ctcm	FICON channel
0000/00	3088/1f	lcs	2216 Nways Multiaccess Connector
0000/00	3088/1f	ctcm	ESCON channel
0000/00	3088/60	lcs	OSA configured as OSE (non-QDIO)

Chapter 14. qeth device driver for OSA-Express (QDIO) and HiperSockets

The qeth device driver supports a multitude of network connections, for example, connections through Open Systems Adapters (OSA), HiperSockets, guest LANs, and virtual switches.

Real connections that use OSA-Express features

An IBM mainframe uses OSA-Express features, which are real LAN-adapter hardware, see Figure 34. These adapters provide connections to the outside world, but can also connect virtual systems (between LPARs or between z/VM guest virtual machines) within the mainframe. The qeth driver supports these adapters if they are defined to run in queued direct I/O (QDIO) mode (defined as OSD in the hardware configuration). OSD-devices are the standard z Systems LAN-adapters. For details about OSA-Express in QDIO mode, see *Open Systems Adapter-Express Customer's Guide and Reference*, SA22-7935.

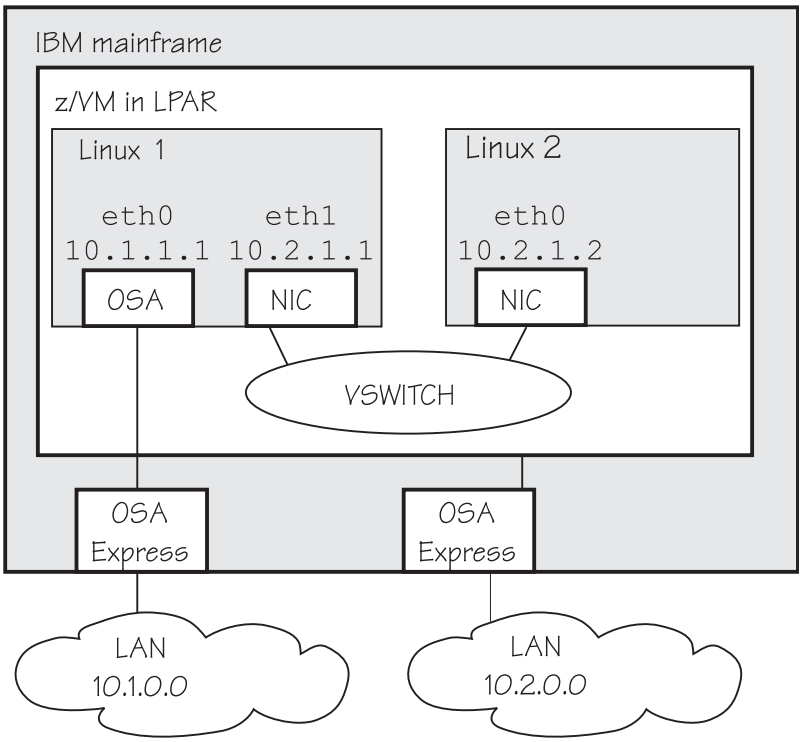

Figure 34. OSA-Express adapters are real LAN-adapter hardware

The qeth device driver supports OSA-Express features for the z Systems mainframes that are relevant to SUSE Linux Enterprise Server 12 SP3 as shown in Table 36.:

Table 36. The qeth device driver support for OSA-Express features

Feature	z13	zEC12 and zBC12	z196 and z114
OSA-Express5S	Gigabit Ethernet 10 Gigabit Ethernet 1000Base-T Ethernet	Gigabit Ethernet 10 Gigabit Ethernet 1000Base-T Ethernet	Not supported

Table 36. The qeth device driver support for OSA-Express features (continued)

Feature	z13	zEC12 and zBC12	z196 and z114
OSA-Express4S	Gigabit Ethernet 10 Gigabit Ethernet 1000Base-T Ethernet	Gigabit Ethernet 10 Gigabit Ethernet 1000Base-T Ethernet	Gigabit Ethernet 10 Gigabit Ethernet
OSA-Express3	Not supported	Gigabit Ethernet 10 Gigabit Ethernet 1000Base-T Ethernet	Gigabit Ethernet 10 Gigabit Ethernet 1000Base-T Ethernet
OSA-Express2	Not supported	Not supported	Gigabit Ethernet 1000Base-T Ethernet

Note: Unless otherwise indicated, OSA-Express refers to the OSA-express features as shown in Table 36 on page 217.

The qeth device driver supports CHPIDs of type OSM and OSX:

OSM provides connectivity to the intranode management network (INMN) from Unified Resource Manager functions to a zEnterprise CPC.

OSX provides connectivity to and access control for the intraensemble data network (IEDN), which is managed by Unified Resource Manager functions. A zEnterprise CPC and zBX within an ensemble are connected through the IEDN. See *zEnterprise System Introduction to Ensembles*, GC27-2609 and *zEnterprise System Ensemble Planning and Configuring Guide*, GC27-2608 for more details.

HiperSockets

An IBM mainframe uses internal connections that are called *HiperSockets*. These simulate QDIO network adapters and provide high-speed TCP/IP communication for operating system instances within and across LPARs. For details about HiperSockets, see *HiperSockets Implementation Guide*, SG24-6816.

The qeth device driver supports HiperSockets for all z Systems mainframes on which you can run SUSE Linux Enterprise Server 12 SP3.

Virtual connections for Linux on z/VM

z/VM offers virtualized LAN-adapters that enable connections between z/VM guest virtual machines and the outside world. It allows definitions of simulated network interface cards (NICs) attached to certain z/VM guest virtual machines. The NICs can be connected to a simulated LAN segment called *guest LAN* for z/VM internal communication between z/VM guest virtual machines, or they can be connected to a virtual switch called *VSWITCH* for external LAN connectivity.

Guest LAN

Guest LANs represent a simulated LAN segment that can be connected to simulated network interface cards. There are three types of guest LANs:

- Simulated OSA-Express in layer 3 mode
- Simulated HiperSockets(layer 3) mode
- Simulated Ethernet in layer 2 mode

Each guest LAN is isolated from other guest LANs on the same system (unless some member of one LAN group acts as a router to

other groups). See Figure 35.

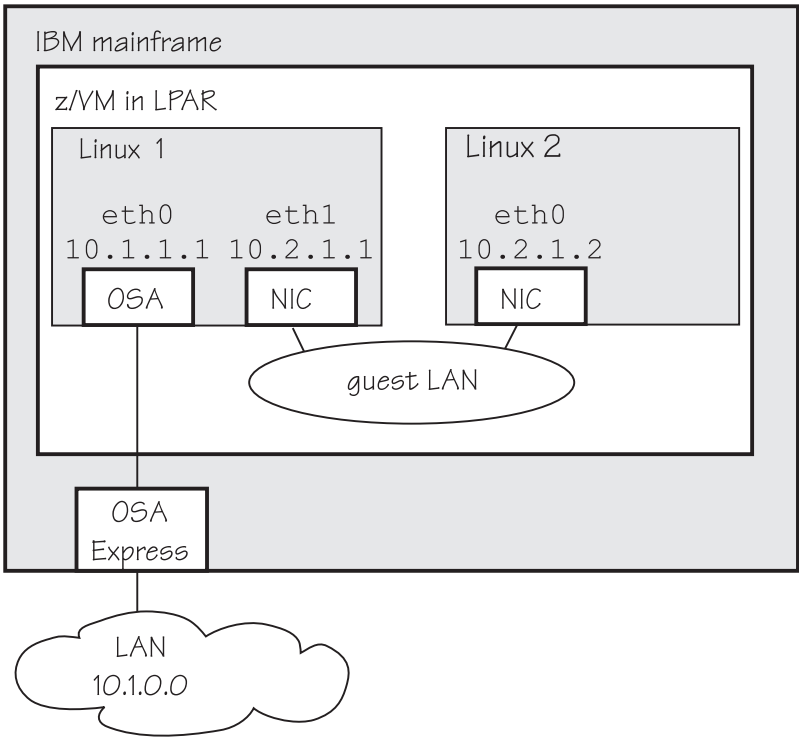

Figure 35. Guest LAN

Virtual switch

A virtual switch (VSWITCH) is a special-purpose guest LAN that provides external LAN connectivity through an additional OSA-Express device served by z/VM without the need for a routing virtual machine, see Figure 36 on page 220.

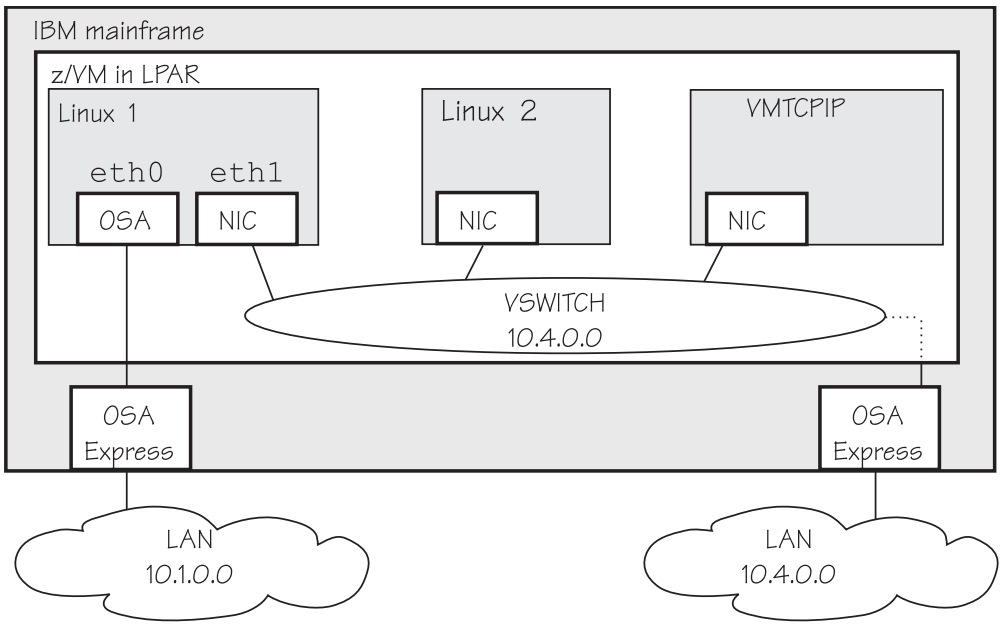

Figure 36. Virtual switch

A dedicated OSA adapter can be an option, but is not required for a VSWITCH.

The qeth device driver distinguishes between virtual NICs in QDIO mode or HiperSockets mode. It cannot detect whether the virtual network is a guest LAN or a VSWITCH.

For information about guest LANs, virtual switches, and virtual HiperSockets, see *z/VM Connectivity*, SC24-6174.

Device driver functions

The qeth device driver supports many networking transport protocol functions, as well as offload functions and problem determination functions.

The qeth device driver supports functions listed in Table 37 and Table 38 on page 222.

Table 37. Real connections

Function	OSA Layer 2	OSA Layer 3	HiperSockets Layer 2 Ethernet	HiperSockets Layer 3 Ethernet
Basic device or protocol functions				
IPv4/multicast/broadcast	Yes/Yes/Yes	Yes/Yes/Yes	Yes/Yes/Yes	Yes/Yes/Yes
IPv6/multicast	Yes/Yes	Yes/Yes	Yes/Yes	Yes/Yes
Non-IP traffic	Yes	Yes	Yes	No
VLAN IPv4/IPv6/non IP	sw/sw/sw	hw/sw/sw	sw/sw/sw	hw/sw/No
Linux ARP	Yes	No (hw ARP)	Yes	No
Linux neighbor solicitation	Yes	Yes	Yes	No
Unique MAC address	Yes (random)	No	Yes	Yes

Table 37. Real connections (continued)

Function	OSA Layer 2	OSA Layer 3	HiperSockets Layer 2 Ethernet	HiperSockets Layer 3 Ethernet
Change MAC address	Yes	No	Yes	No
Promiscuous mode	No	No	No	• Yes (for sniffer=1) • No (for sniffer=0)
MAC headers send/receive	Yes/Yes	faked/faked	Yes/Yes	faked/faked
ethtool support	Yes	Yes	Yes	Yes
Bonding	Yes	No	Yes	No
Priority queueing	Yes	Yes	Yes	Yes
Bridge port	No	No	Yes	No
Offload features				
TCP segmentation offload (TSO)	No	Yes	No	No
Inbound (rx) checksum	Yes	Yes	No	No
Outbound (tx) checksum	Yes	Yes	No	No
OSA/QETH specific features				
Special device driver setup for VIPA	No	required	No	Yes
Special device driver setup for proxy ARP	No	required	No	Yes
Special device driver setup for IP takeover	No	required	No	Yes
Special device driver setup for routing IPv4/IPv6	No/No	required/ required	No/No	Yes/Yes
Receive buffer count	Yes	Yes	Yes	Yes
Direct connectivity to z/OS	Yes by HW	Yes	No	Yes
SNMP support	Yes	Yes	No	No
Multiport support	Yes	Yes	No	No
Data connection isolation	Yes	Yes	No	No
Problem determination				
Hardware trace	No	Yes	No	No

Legend:
No Function not supported or not required.
Yes Function supported.
hw Function performed by hardware.
sw Function performed by software.
faked Function will be simulated.
required
Function requires special setup.

Table 38. z/VM VSWITCH or Guest LAN connections

Function	Emulated OSA Layer 2	Emulated OSA Layer 3	Emulated HiperSockets Layer 3
Basic device or protocol features			
IPv4/multicast/broadcast	Yes/Yes/Yes	Yes/Yes/Yes	Yes/Yes/Yes
IPv6/multicast	Yes/Yes	Yes/Yes	No/No
Non-IP traffic	Yes	No	No
VLAN IPv4/IPv6/non IP	sw/sw/sw	hw/sw/No	hw/No/No
Linux ARP	Yes	No (hw ARP)	No
Linux neighbor solicitation	Yes	Yes	No
Unique MAC address	Yes	No	Yes
Change MAC address	Yes	No	No
Promiscuous mode	Yes	Yes	No
MAC headers send/receive	Yes/Yes	faked/faked	faked/faked
ethtool support	Yes	Yes	Yes
Bonding	Yes	No	No
Priority queueing	Yes	Yes	Yes
Offload features			
TSO	No	No	No
rx HW checksum	No	No	No
OSA/QETH specific features			
Special device driver setup for VIPA	No	required	required
Special device driver setup for proxy ARP	No	required	required
Special device driver setup for IP takeover	No	required	required
Special device driver setup for routing IPv4/IPv6	No/No	required/required	required/required
Receive buffer count	Yes	Yes	Yes
Direct connectivity to z/OS	No	Yes	Yes
SNMP support	No	No	No
Multiport support	No	No	No
Data connection isolation	No	No	No
Problem determination			
Hardware trace	No	No	No

Legend:
No Function not supported or not required.
Yes Function supported.
hw Function performed by hardware.
sw Function performed by software.
faked Function will be simulated.
required
Function requires special setup.

What you should know about the qeth device driver

Interface names are assigned to qeth group devices, which map to subchannels and their corresponding device numbers and device bus-IDs. An OSA-Express adapter can handle both IPv4 and IPv6 packets.

Layer 2 and layer 3

The qeth device driver consists of a common core and two device disciplines: layer 2 and layer 3.

In layer 2 mode, OSA routing to the destination Linux instance is based on MAC addresses. A local MAC address is assigned to each interface of a Linux instance and registered in the OSA Address Table. These MAC addresses are unique and different from the MAC address of the OSA adapter. See "MAC headers in layer 2 mode" on page 226 for details.

In layer 3 mode, all interfaces of all Linux instances share the MAC address of the OSA adapter. OSA routing to the destination Linux instance is based on IP addresses. See "MAC headers in layer 3 mode" on page 227 for details.

The layer 2 discipline (qeth_l2)

The layer 2 discipline supports:

- OSA devices and z/VM virtual NICs that couple to VSWITCHes or QDIO guest LANs
- OSA devices for NCP
- HiperSockets devices
- OSM (OSA-Express for Unified Resource Manager) devices
- OSX (OSA-Express for zBX) devices for IEDN

The layer 2 discipline is the default setup for OSA. On HiperSockets the default continues to be layer 3. OSA guest LANs are layer 2 by default, while HiperSockets guest LANs are always layer 3. See "Setting the layer2 attribute" on page 237 for details.

The layer 3 discipline (qeth_l3)

The layer 3 discipline supports:

- OSA devices and z/VM virtual NICs that couple to VSWITCHes or QDIO guest LANs that are running in layer 3 mode (with faked link layer headers)
- HiperSockets and HiperSockets guest LAN devices that are running in layer 3 mode (with faked link layer headers)
- OSX (OSA-Express for zBX) devices for IEDN

This discipline supports those devices that are not capable of running in layer 2 mode. Not all Linux networking features are supported and others need special setup or configuration. See Table 44 on page 234. Some performance-critical applications might benefit from being layer 3.

Layer 2 and layer 3 interfaces cannot communicate within a HiperSockets LAN or within a VSWITCH or guest LAN. However, a shared OSA adapter can convert traffic between layer 2 and layer 3 networks.

qeth group devices

The qeth device driver requires three I/O subchannels for each HiperSockets CHPID or OSA-Express CHPID in QDIO mode. One subchannel is for control reads, one for control writes, and the third is for data.

The qeth device driver uses the QDIO protocol to communicate with the HiperSockets and OSA-Express adapter.

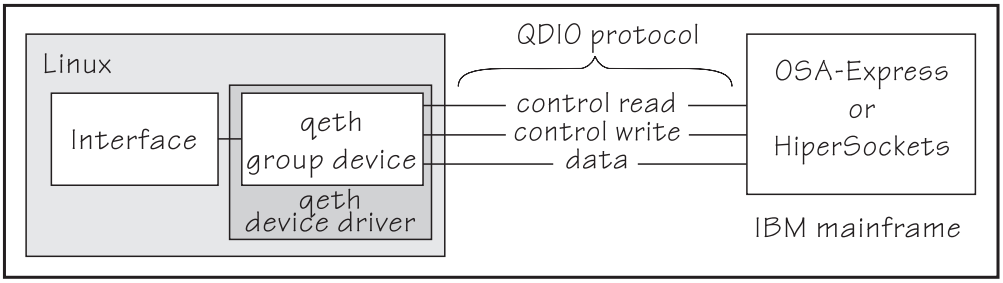

Figure 37. I/O subchannel interface

The three device bus-IDs that correspond to the subchannel triplet are grouped as one qeth group device. The following rules apply for the device bus-IDs:

read no specific rules.

write must be the device bus-ID of the read subchannel plus one.

data can be any free device bus-ID on the same CHPID.

You can configure different triplets of device bus-IDs on the same CHPID differently. For example, if you have two triplets on the same CHPID they can have different attribute values for priority queueing.

Overview of the steps for setting up a qeth group device

You need to perform several steps before user-space applications on your Linux instance can use a qeth group device.

Before you begin

Find out how the hardware is configured and which qeth device bus-IDs are on which CHPID, for example by looking at the IOCDS. Identify the device bus-IDs that you want to group into a qeth group device. The three device bus-IDs must be on the same CHPID.

Procedure

Perform these steps to allow user-space applications on your Linux instance to use a qeth group device:

1. Create the qeth group device.

   After booting Linux, each qeth device bus-ID is represented by a subdirectory in `/sys/bus/ccw/devices/`. These subdirectories are then named with the bus IDs of the devices. For example, a qeth device with bus IDs 0.0.fc00, 0.0.fc01, and 0.0.fc02 is represented as `/sys/bus/ccw/drivers/qeth/0.0.fc00`
2. Configure the device.
3. Set the device online.

4. Activate the device and assign an IP address to it.

What to do next

These tasks and the configuration options are described in detail in "Working with qeth devices" on page 232.

qeth interface names and device directories

The qeth device driver automatically assigns interface names to the qeth group devices and creates the corresponding sysfs structures.

According to the type of CHPID and feature used, the naming scheme uses the following base names:

eth<*n*>
for Ethernet features.

hsi<*n*>
for HiperSockets devices.

where <*n*> is an integer that uniquely identifies the device. When the first device for a base name is set online it is assigned 0, the second is assigned 1, the third 2, and so on. Each base name is counted separately.

For example, the interface name of the first Ethernet feature that is set online is "eth0", the second "eth1". When the first HiperSockets device is set online, it is assigned the interface name "hsi0".

While an interface is online, it is represented in sysfs as:
`/sys/class/net/<interface>`

The qeth device driver shares the name space for Ethernet interfaces with the LCS device driver. Each driver uses the name with the lowest free identifier <*n*>, regardless of which device driver occupies the other names. For example, assume that the first qeth Ethernet feature is set online and there already is one LCS Ethernet feature online. Then the LCS feature is named "eth0" and the qeth feature is named "eth1". See also "LCS interface names" on page 295.

The mapping between interface names and the device bus-ID that represents the qeth group device in sysfs is preserved when a device is set offline and back online. However, it can change when rebooting, when devices are ungrouped, or when devices appear or disappear with a machine check.

"Finding out the interface name of a qeth group device" on page 243 and "Finding out the bus ID of a qeth interface" on page 243 provide information about mapping device bus-IDs and interface names.

Support for IP Version 6 (IPv6)

The qeth device driver supports IPv6 in many network setups.

IPv6 is supported on:

- Ethernet interfaces of the OSA-Express adapter that runs in QDIO mode.
- HiperSockets layer 2 and layer 3 interfaces.
- z/VM guest LAN interfaces running in QDIO or HiperSockets layer 3 mode.
- z/VM guest LAN and VSWITCH interfaces in layer 2.

There are noticeable differences between the IP stacks for versions 4 and 6. Some concepts in IPv6 are different from IPv4, such as neighbor discovery, broadcast, and Internet Protocol security (IPsec). IPv6 uses a 16-byte address field, while the addresses under IPv4 are 4 bytes in length.

Stateless autoconfiguration generates unique IP addresses for all Linux instances, even if they share an OSA-Express adapter with other operating systems.

Be aware of the IP version when you specify IP addresses and when you use commands that return IP-version specific output (such as **qetharp**).

MAC headers in layer 2 mode

In LAN environments, data packets find their destination through Media Access Control (MAC) addresses in their MAC header.

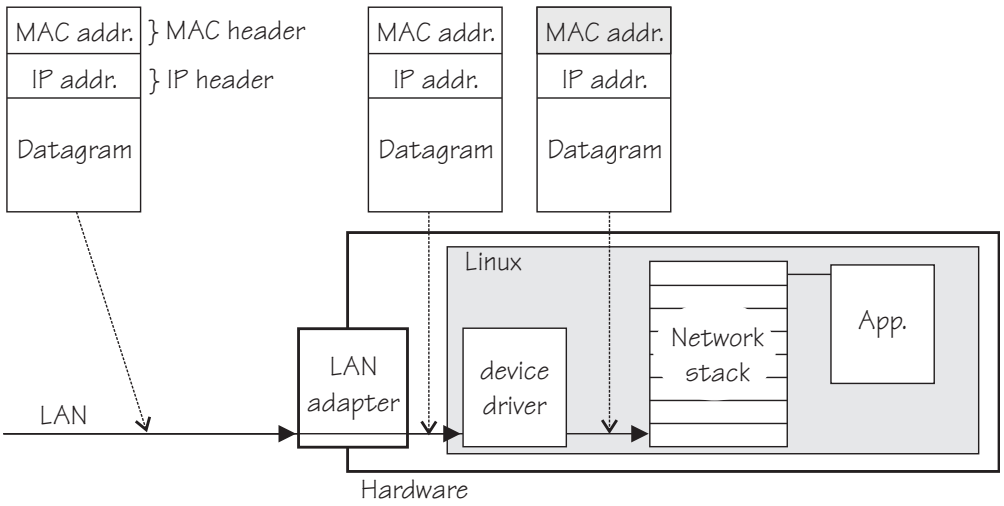

Figure 38. Standard IPv4 processing

MAC address handling as shown in Figure 38) applies to non-mainframe environments and a mainframe environment with an OSA-Express adapter where the layer2 option is enabled.

The layer2 option keeps the MAC addresses on incoming packets. Incoming and outgoing packets are complete with a MAC header at all stages between the Linux network stack and the LAN as shown in Figure 38. This layer2-based forwarding requires unique MAC addresses for all concerned Linux instances.

In layer 2 mode, the Linux TCP/IP stack has full control over the MAC headers and the neighbor lookup. The Linux TCP/IP stack does not configure IPv4 or IPv6 addresses into the hardware, but requires a unique MAC address for the card. Users working with a directly attached OSA-card should assign a unique MAC-address themselves.

For Linux instances that are directly attached to an OSA-Express adapter in QDIO mode, you should assign the MAC addresses yourself. You can add a line `LLADDR='<MAC address>'` to the configuration file `/etc/sysconfig/network/ifcfg-<if-name>`. Alternatively, you can change the MAC address by issuing the command:

```
ip link set addr <MAC address> dev <interface>
```

Note: Be sure not to assign the MAC address of the OSA-Express adapter to your Linux instance.

For OSX and OSM CHPIDs, you cannot set your own MAC addresses. Linux uses the MAC addresses defined by the Unified Resource Manager.

For HiperSockets connections, a MAC address is generated.

For connections within a QDIO-based z/VM guest LAN environment, z/VM assigns the necessary MAC addresses to its guests.

MAC headers in layer 3 mode

A qeth layer 3 mode device driver is an Ethernet offload engine for IPv4 and a partial Ethernet offload engine for IPv6. Hence, there are some special things to understand about the layer 3 mode.

To support IPv6 and protocols other than IPv4, the device driver registers a layer 3 card as an Ethernet device to the Linux TCP/IP stack.

In layer 3 mode, the OSA-Express adapter in QDIO mode removes the MAC header with the MAC address from incoming IPv4 packets. It uses the registered IP addresses to forward a packet to the recipient TCP/IP stack. See Figure 39. Thus the OSA-Express adapter is able to deliver IPv4 packets to the correct Linux images. Apart from broadcast packets, a Linux image can get packets only for IP addresses it configured in the stack and registered with the OSA-Express adapter.

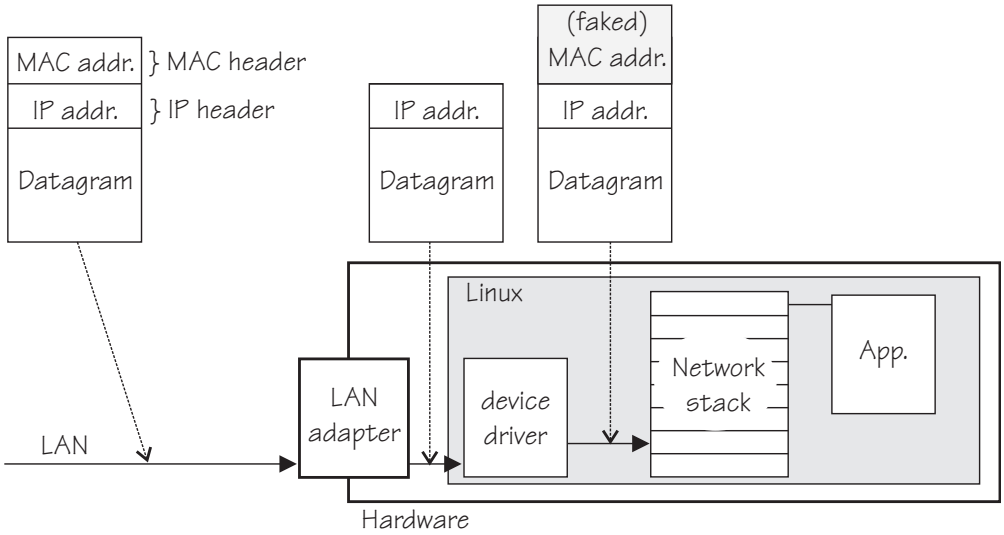

Figure 39. MAC address handling in layer3 mode

The OSA-Express QDIO microcode builds MAC headers for outgoing IPv4 packets and removes them from incoming IPv4 packets. Hence, the operating systems' network stacks send and receive only IPv4 packets without MAC headers.

This lack of MAC headers can be a problem for applications that expect MAC headers. For examples of how such problems can be resolved, see “Setting up for DHCP with IPv4” on page 280.

Outgoing frames

The qeth device driver registers the layer 3 card as an Ethernet device. Therefore, the Linux TCP/IP stack will provide complete Ethernet frames to the device driver.

If the hardware does not require the Ethernet frame (for example, for IPv4) the driver removes the Ethernet header prior to sending the frame to the hardware. If necessary information like the Ethernet target address is not available (because of the offload functionality) the value is filled with the hardcoded address FAKELL.

Table 39. Ethernet addresses of outgoing frames

Frame	Destination address	Source address
IPv4	FAKELL	Real device address
IPv6	Real destination address	Real device address
Other packets	Real destination address	Real device address

Incoming frames

The device driver provides Ethernet headers for all incoming frames.

If necessary information like the Ethernet source address is not available (because of the offload functionality) the value is filled with the hardcoded address FAKELL.

Table 40. Ethernet addresses of incoming frames

Frame	Destination address	Source address
IPv4	Real device address	FAKELL
IPv6	Real device address	FAKELL
Other packets	Real device address	Real source address

Note that if a source or destination address is a multicast or broadcast address the device driver can provide the corresponding (real) Ethernet multicast or broadcast address even when the packet was delivered or sent through the offload engine. Always providing the link layer headers enables packet socket applications like **tcpdump** to work properly on a qeth layer 3 device without any changes in the application itself (the patch for libpcap is no longer required).

While the faked headers are syntactically correct, the addresses are not authentic, and hence applications requiring authentic addresses will not work. Some examples are given in Table 41.

Table 41. Applications that react differently to faked headers

Application	Support	Reason
tcpdump	Yes	Displays only frames, fake Ethernet information is displayed.
iptables	Partially	As long as the rule does not deal with Ethernet information of an IPv4 frame.
dhcp	Yes	Is non-IPv4 traffic.

IP addresses

The network stack of each operating system that shares an OSA-Express adapter in QDIO mode registers all its IP addresses with the adapter.

Whenever IP addresses are deleted from or added to a network stack, the device drivers download the resulting IP address list changes to the OSA-Express adapter.

For the registered IP addresses, the OSA-Express adapter off-loads various functions, in particular also:

- Handling MAC addresses and MAC headers
- ARP processing

ARP:

The OSA-Express adapter in QDIO mode responds to Address Resolution Protocol (ARP) requests for all registered IPv4 addresses.

ARP is a TCP/IP protocol that translates 32-bit IPv4 addresses into the corresponding hardware addresses. For example, for an Ethernet device, the hardware addresses are 48-bit Ethernet Media Access Control (MAC) addresses. The mapping of IPv4 addresses to the corresponding hardware addresses is defined in the ARP cache. When it needs to send a packet, a host consults the ARP cache of its network adapter to find the MAC address of the target host.

If there is an entry for the destination IPv4 address, the corresponding MAC address is copied into the MAC header and the packet is added to the appropriate interface's output queue. If the entry is not found, the ARP functions retain the IPv4 packet, and broadcast an ARP request asking the destination host for its MAC address. When a reply is received, the packet is sent to its destination.

Note:

1. On an OSA-Express adapter in QDIO mode, do not set the NO_ARP flag on the Linux Ethernet device. The device driver disables the ARP resolution for IPv4. Because the hardware requires no neighbor lookup for IPv4, but neighbor solicitation for IPv6, the NO_ARP flag is not allowed on the Linux Ethernet device.
2. On HiperSockets, which is a full Ethernet offload engine for IPv4 and IPv6 and supports no other traffic, the device driver sets the NO_ARP flag on the Linux Ethernet interface. Do not remove this flag from the interface.

Layer 2 bridge port function

OSA and HiperSockets ports that operate in layer 2 mode can be set up to receive all frames that are addressed to unknown MAC addresses.

Other architectures

Non z Systems networks use Ethernet Network Interface Controllers (NICs) to pass traffic between the operating system and the network. Normally, a NIC filters incoming traffic to admit only frames with destination MAC addresses that match addresses that are registered with the NIC.

However, a NIC can also be configured to receive and pass to the operating system all Ethernet frames that reach it, regardless of the destination MAC address. This mode of operation is known as “promiscuous mode”. For example, promiscuous mode is a prerequisite for configuring a NIC as a member of a Linux software bridge.

For more information about how to set up a software bridge, see the SUSE Linux Enterprise Server documentation, or the bridging how-to available at

http://www.tldp.org/HOWTO/BRIDGE-STP-HOWTO

z/Architecture

OSA and HiperSockets adapters on z Systems do not have a direct equivalent of promiscuous mode of operation. Instead, OSA and HiperSockets hardware support bridge port functions. The operating system can assign a bridge port *role* to a logical port, and the adapter assigns an active *state* to one of the logical ports to which a role was assigned.

A local port in active bridge port state receives all Ethernet frames with unknown destination MAC addresses. Figure 40 shows a setup with a HiperSockets bridge port and an OSA bridge port.

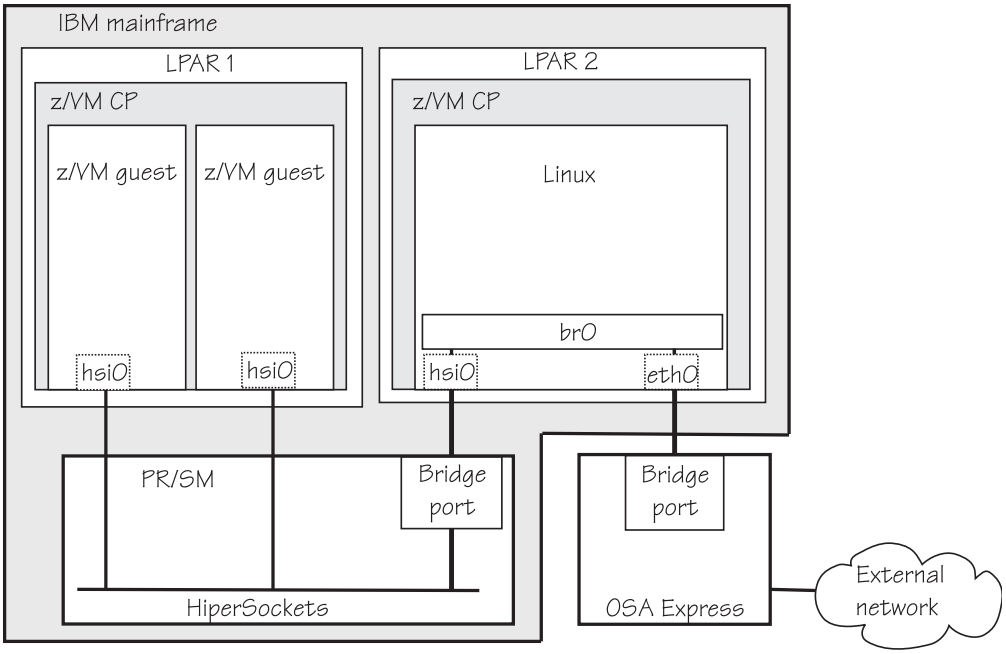

Figure 40. HiperSockets and OSA bridge port in Linux

HiperSockets only: Permission to configure ports as bridge ports must be granted in IBM zEnterprise Unified Resource Manager (zManager).

Differences between promiscuous mode and bridge-port roles

Making a logical port of an OSA or HiperSockets adapter an active bridge port is similar to enabling promiscuous mode on a non-mainframe NIC that is connected to a real Ethernet switch. However, there are important differences:

Number of ports in promiscuous mode

- Real switches: Any number of interfaces that are connected to a real switch can be turned to promiscuous mode, and all of them then receive frames with unknown destination addresses.
- Bridge ports (on z): Although you can assign the bridge-port role to multiple ports of a single OSA or HiperSockets adapter, only one port is active and receives traffic to unknown destinations.

Interception of traffic to other systems

- Real switches: A port of a real switch can be configured to receive frames with both known and unknown destinations. If a NIC in promiscuous mode is connected to the port, the corresponding host receives a copy of all traffic that passes through the switch. This includes traffic that is destined to other hosts connected to this switch.
- Bridge ports (on z): Only frames with unknown destinations are passed to the operating system. It is not possible to intercept traffic addressed to systems connected to other ports of the same OSA or HiperSockets adapter.

Limitation by the source of traffic (OSA bridge port only)

- Real switches and HiperSockets bridge-port LAN: Frames with unknown destination MAC addresses are delivered to the promiscuous interfaces regardless of the port through which the frames enter the switch or HiperSockets adapter.
- OSA bridge port only: An active bridge port *learns* which MAC addresses need to be routed to the owning system by analyzing ARP and other traffic. Incoming frames are routed to the active bridge port if their destination MAC address:
  - Matches an address that is learned or registered with the bridge port
  - Is not learned or registered with any of the local ports of the OSA adapter, but arrived from the physical Ethernet port

Bridge port roles

Linux can assign a primary or secondary role to a logical port of an OSA or a HiperSockets adapter. Only one logical port of such an adapter can be assigned the primary role, but multiple other logical ports can be assigned secondary role. When one or more logical ports of an adapter are assigned primary or secondary role, the hardware ensures that exactly one of these ports is active. The active port receives frames with unknown destination. When a port with primary role is present, it always becomes active. When only ports with secondary role are present, the hardware decides which one becomes active. Changes in the ports' state are reported to Linux user space through udev events.

You can set a bridge port role either directly by using the **bridge_role** attribute or indirectly by using the **bridge_reflect_promisc** attribute. See "Configuring a network device as a member of a Linux bridge" on page 263.

Setting up the qeth device driver

No module parameters exist for the qeth device driver. qeth devices are set up using sysfs.

Loading the qeth device driver modules

There are no module parameters for the qeth device driver. SUSE Linux Enterprise Server 12 SP3 loads the required device driver modules for you when a device becomes available.

You can also load the module with the **modprobe** command:

qeth module syntax

```
►►─modprobe──┬─ qeth ──┬──────────────────────────────────────►◄
             ├─ qeth_l2─┤
             └─ qeth_l3─┘
```

where:

qeth is the core module that contains common functions that are used for both the layer 2 and layer 3 disciplines.

qeth_l2
is the module that contains layer 2 discipline-specific code.

qeth_l3
is the module that contains layer 3 discipline-specific code.

When a qeth device is configured for a particular discipline, the driver tries to automatically load the corresponding discipline module.

Switching the discipline of a qeth device

To switch the discipline of a device the network interface must be shut down and the device must be offline.

If the new discipline is accepted by the device driver the old network interface will be deleted. When the new discipline is set online the first time the new network interface is created.

Removing the modules

Removing a module is not possible if there are cross dependencies between the discipline modules and the core module.

To release the dependencies from the core module to the discipline module, all devices of this discipline must be ungrouped. Now the discipline module can be removed. If all discipline modules are removed, the core module can be removed.

Working with qeth devices

Typical tasks that you need to perform when working with qeth devices include creating group devices, finding out the type of a network adapter, and setting a device online or offline.

About this task

Attention: Use the procedures described here for dynamic testing of configuration settings. For persistent configuration in a production system, use one of the SUSE-provided tools YaST, yast2, or the **qeth_configure** command. For more details about the **qeth_configure** command, see the man page.

YaST creates a udev configuration file called `/etc/udev/rules.d/xx-qeth-0.0.xxxx.rules`. Additionally, cross-platform network configuration parameters are defined in `/etc/sysconfig/network/ifcfg-<if_name>`

Table 42 and Table 44 on page 234 serve as both a task overview and a summary of the attributes and the possible values you can write to them. Underlined values are defaults.

Not all attributes are applicable to each device. Some attributes apply only to HiperSockets or only to OSA-Express CHPIDs in QDIO mode, other attributes are applicable to IPv4 interfaces only. See the task descriptions for the applicability of each attribute.

OSA for NCP handles NCP-related packets. Most of the attributes do not apply to OSA for NCP devices. The attributes that apply are:

- if_name
- card_type
- buffer_count
- recover

Table 42. qeth tasks and attributes common to layer2 and layer3

Task	Corresponding attributes	Possible attribute values
"Creating a qeth group device" on page 235	group	n/a
"Removing a qeth group device" on page 236	ungroup	0 or 1
"Setting the layer2 attribute" on page 237	layer2	0 or 1, see "Layer 2 and layer 3" on page 223[1]
"Using priority queueing" on page 238	priority_queueing	prio_queueing_vlan prio_queueing_skb prio_queueing_prec prio_queueing_tos no_prio_queueing no_prio_queueing:0 no_prio_queueing:1 no_prio_queueing:2 no_prio_queueing:3
"Specifying the number of inbound buffers" on page 240	buffer_count	integer in the range 8 -128. The default is 64 for OSA devices and 128 for HiperSockets devices
"Specifying the relative port number" on page 241	portno	integer, either 0 or 1, the default is 0
"Finding out the type of your network adapter" on page 241	card_type	n/a, read-only
"Setting a device online or offline" on page 242	online	0 or 1
"Finding out the interface name of a qeth group device" on page 243	if_name	n/a, read-only
"Finding out the bus ID of a qeth interface" on page 243	none	n/a
"Activating an interface" on page 243	none	n/a
"Deactivating an interface" on page 246	none	n/a
"Recovering a device" on page 246	recover	1
"Turning inbound checksum calculations on and off" on page 247	none	n/a
"Turning outbound checksum calculations on and off" on page 247	none	n/a
"Isolating data connections" on page 248	isolation	none, drop, forward

Table 42. qeth tasks and attributes common to layer2 and layer3 (continued)

Task	Corresponding attributes	Possible attribute values
"Starting and stopping collection of QETH performance statistics" on page 251	performance_stats	0 or 1
"Capturing a hardware trace" on page 252	hw_trap	arm disarm

[1]A value of -1 means that the layer has not been set and that the default layer setting is used when the device is set online.

Table 43. qeth functions and attributes in layer 2 mode

Function	Corresponding attributes	Possible attribute values
"Configuring a network device as a member of a Linux bridge" on page 263	bridge_role bridge_state bridge_hostnotify	primary, secondary, none active, standby, inactive 0 or 1

Table 44. qeth tasks and attributes in layer 3 mode

Task	Corresponding attributes	Possible attribute values
"Setting up a Linux router" on page 254	route4 route6	primary_router secondary_router primary_connector secondary_connector multicast_router no_router
"Enabling and disabling TCP segmentation offload" on page 256	none	n/a
"Faking broadcast capability" on page 257	fake_broadcast [1]	0 or 1
"Taking over IP addresses" on page 257	ipa_takeover/enable	0 or 1 or toggle
	ipa_takeover/add4 ipa_takeover/add6 ipa_takeover/del4 ipa_takeover/del6	IPv4 or IPv6 IP address and mask bits
	ipa_takeover/invert4 ipa_takeover/invert6	0 or 1 or toggle
"Configuring a device for proxy ARP" on page 261	rxip/add4 rxip/add6 rxip/del4 rxip/del6	IPv4 or IPv6 IP address
"Configuring a device for virtual IP address (VIPA)" on page 262	vipa/add4 vipa/add6 vipa/del4 vipa/del6	IPv4 or IPv6 IP address
"Configuring a HiperSockets device for AF_IUCV addressing" on page 263	hsuid	1 to 8 characters
"Setting up a HiperSockets network traffic analyzer" on page 281	sniffer	0 or 1

[1] not valid for HiperSockets

Tip: Use the **qethconf** command instead of using the attributes for IPA, proxy ARP, and VIPA directly (see "qethconf - Configure qeth devices" on page 637). In YaST, you can use "IPA Takeover".

sysfs provides multiple paths through which you can access the qeth group device attributes. For example, if a device with bus ID 0.0.a100 corresponds to interface eth0:

```
/sys/bus/ccwgroup/drivers/qeth/0.0.a100
/sys/bus/ccwgroup/devices/0.0.a100
/sys/devices/qeth/0.0.a100
/sys/class/net/eth0/device
```

all lead to the attributes for the same device. For example, the following commands are all equivalent and return the same value:

```
# cat /sys/bus/ccwgroup/drivers/qeth/0.0.a100/if_name
eth0
# cat /sys/bus/ccwgroup/devices/0.0.a100/if_name
eth0
# cat /sys/devices/qeth/0.0.a100/if_name
eth0
# cat /sys/class/net/eth0/device/if_name
eth0
```

However, the path through `/sys/class/net` is available only while the device is online. Furthermore, it might lead to a different device if the assignment of interface names changes after rebooting or when devices are ungrouped and new group devices created.

Tips:

- Work through one of the paths that are based on the device bus-ID.
- Using SUSE Linux Enterprise Server 12 SP3, you set qeth attributes in YaST. YaST, in turn, creates a udev configuration file called `/etc/udev/rules.d/xx-qeth-0.0.xxxx.rules`. Additionally, cross-platform network configuration parameters are defined in `/etc/sysconfig/network/ifcfg-<`*`if_name`*`>`.

The following sections describe the tasks in detail.

Creating a qeth group device

Use the **znetconf** command to configure network devices. Alternatively, you can use sysfs.

Before you begin

You need to know the device bus-IDs that correspond to the read, write, and data subchannel of your OSA-Express CHPID in QDIO mode or HiperSockets CHPID as defined in the IOCDS of your mainframe.

Procedure

To create a qeth group device, either:

- Issue the **znetconf** command to create and configure a group device. The command groups the correct bus-IDs for you and sets the device online. For information about the **znetconf** command, see "znetconf - List and configure network devices" on page 679.

- Write the device numbers of the subchannel triplet to the sysfs `group` attribute to only define a group device. Issue a command of the form:

```
# echo <read_device_bus_id>,<write_device_bus_id>,<data_device_bus_id> > /sys/bus/ccwgroup/drivers/qeth/group
```

Results

The qeth device driver uses the device bus-ID of the read subchannel to create a directory for a group device:

`/sys/bus/ccwgroup/drivers/qeth/<read_device_bus_id>`

This directory contains a number of attributes that determine the settings of the qeth group device. The following sections describe how to use these attributes to configure a qeth group device.

Example

In this example (see Figure 41), a single OSA-Express CHPID in QDIO mode is used to connect a Linux instance to a network.

Mainframe configuration:

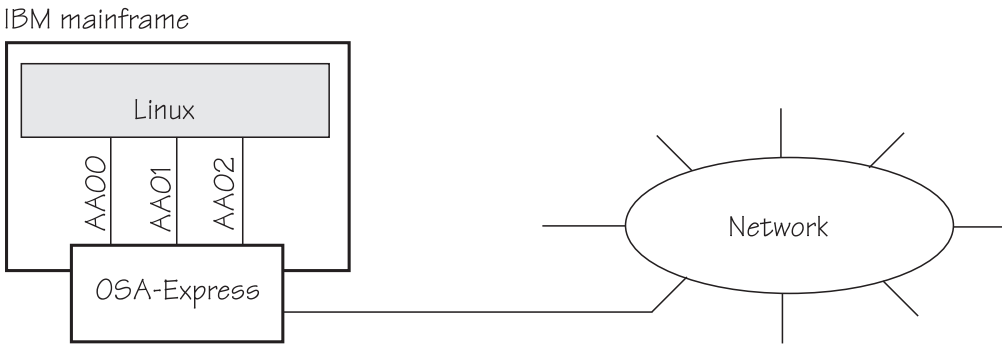

Figure 41. Mainframe configuration

Linux configuration:

Assuming that 0.0.aa00 is the device bus-ID that corresponds to the read subchannel:

```
# echo 0.0.aa00,0.0.aa01,0.0.aa02 > /sys/bus/ccwgroup/drivers/qeth/group
```

This command results in the creation of the following directories in sysfs:

- `/sys/bus/ccwgroup/drivers/qeth/0.0.aa00`
- `/sys/bus/ccwgroup/devices/0.0.aa00`
- `/sys/devices/qeth/0.0.aa00`

Both the command and the resulting directories would be the same for a HiperSockets CHPID.

Removing a qeth group device

Use the `ungroup` sysfs attribute to remove a qeth group device.

Before you begin

The device must be set offline before you can remove it.

Procedure

To remove a qeth group device, write 1 to the `ungroup` attribute. Issue a command of the form:

```
echo 1 > /sys/bus/ccwgroup/drivers/qeth/<device_bus_id>/ungroup
```

Example

This command removes device 0.0.aa00:

```
echo 1 > /sys/bus/ccwgroup/drivers/qeth/0.0.aa00/ungroup
```

Setting the layer2 attribute

If the detected hardware is known to be exclusively run in a discipline, the corresponding discipline module is automatically requested.

Before you begin

- To change a configured `layer2` attribute, the network interface must be shut down and the device must be set offline.
- If you are using the layer2 option within a QDIO-based guest LAN environment, you cannot define a VLAN with ID 1, because ID 1 is reserved for z/VM use.

About this task

The qeth device driver attempts to load the layer 3 discipline for HiperSockets devices and layer 2 for non-HiperSockets devices.

You can use the layer 2 mode for almost all device types. However, note the following about layer 2 to layer 3 conversion:

real OSA-Express
: Hardware is able to convert layer 2 to layer 3 traffic and vice versa and thus there are no restrictions.

HiperSockets
: There is no support for layer 2 to layer 3 conversion and, thus, no communication is possible between HiperSockets layer 2 interfaces and HiperSockets layer 3 interfaces. Do not include HiperSockets layer 2 interfaces and HiperSockets layer 3 interfaces in the same LAN.

z/VM guest LAN
: Linux has to configure the same mode as the underlying z/VM virtual LAN definition. The z/VM definition "Ethernet mode" is available for VSWITCHes and for guest LANs of type QDIO.

Procedure

The qeth device driver separates the configuration options in sysfs according to the device discipline. Hence the first configuration action after you group the device must be the configuration of the discipline. To set the discipline, issue a command of the form:

```
echo <integer> > /sys/devices/qeth/<device_bus_id>/layer2
```

where *<integer>* is

- 0 to turn off the `layer2` attribute; this results in the layer 3 discipline.
- 1 to turn on the `layer2` attribute; this results in the layer 2 discipline (default).

If the `layer2` attribute has a value of -1, the layer was not set. The default layer setting is used when the device is set online.

Results

If you configured the discipline successfully, more configuration attributes are shown (for example route4 for the layer 3 discipline) and can be configured. If an OSA device is not configured for a discipline but is set online, the device driver assumes that it is a layer 2 device. It then tries to load the layer 2 discipline.

For information about layer2, see:

- *Open Systems Adapter-Express Customer's Guide and Reference*, SA22-7935
- *OSA-Express Implementation Guide*, SG24-5948
- *Networking Overview for Linux on zSeries*, REDP-3901
- *z/VM Connectivity*, SC24-6174

Using priority queueing

An OSA-Express CHPID in QDIO mode has up to four output queues (queues 0 - 3) in central storage. The priority queueing feature gives these queues different priorities (queue 0 having the highest priority). The four output queues are available only if multiple priority is enabled for queues on the OSA-Express CHPID in QDIO mode.

Before you begin

- Priority queueing applies to OSA-Express CHPIDs in QDIO mode only.
- If more than 160 TCP/IP stacks per OSA-Express CHPID are defined in the IOCDS, priority queueing is disabled.
- The device must be offline while you set the queueing options.

About this task

Queueing is relevant mainly to high-traffic situations. When there is little traffic, queueing has no impact on processing. The qeth device driver can put data on one or more of the queues. By default, the driver uses queue 2 for all data.

Procedure

You can determine how outgoing IP packages are assigned to queues by setting a value for the priority_queueing attribute of your qeth device.
Issue a command of the form:

```
# echo <method> > /sys/bus/ccwgroup/drivers/qeth/<device_bus_id>/priority_queueing
```

where <*method*> can be any of these values:

prio_queueing_vlan
to base the queue assignment on the two most significant bits in the priority code point in the IEEE 802.1Q header as used in VLANs. This value affects only traffic with VLAN headers, and hence works only with qeth devices in layer 2 mode.

You can set the priority code point in the IEEE 802.1Q headers of the traffic based on `skb->priority` by using a command of the form:

```
ip link add link <link> name <name> type vlan id <vlan-id> egress-qos-map <mapping>
```

Note: Enabling this option makes all traffic default to queue 3.

prio_queueing_skb
to base the queue assignment on the priority flag of the skbs. An skb, or socket buffer, is a Linux kernel-internal structure that represents network data. The mapping to the priority queues is as follows:

Table 45. Mapping of flag value to priority queues

Priority flag of the skb	Priority queue
0-1	3
2-3	2
4-5	1
≥6	0

You can use `prio_queueing_skb` for any network setups, including conventional LANs.

Use either `sockopt SO_PRIORITY` or an appropriate **iptables** command to adjust the priority flag of the skb (`skb->priority`).

Note: The priority flag of the skbs defaults to 0, hence enabling this option makes all traffic default to queue 3.

prio_queueing_prec
to base the queue assignment on the two most significant bits of each packet's IP header precedence field. To set the precedence field, use `sockopt IP_TOS` (for IPv4) or `IPV6_TCLASS` (for IPv6).

Note: Enabling this option makes all traffic default to queue 3.

prio_queueing_tos
Deprecated; do not use for new setups.

no_prio_queueing
causes the qeth device driver to use queue 2 for all packets. This value is the default.

no_prio_queueing:0
causes the qeth device driver to use queue 0 for all packets.

no_prio_queueing:1
causes the qeth device driver to use queue 1 for all packets.

no_prio_queueing:2
: causes the qeth device driver to use queue 2 for all packets. This value is equivalent to the default.

no_prio_queueing:3
: causes the qeth device driver to use queue 3 for all packets.

Example

To read the current value of priority queueing for device 0.0.a110, issue:

```
# cat /sys/bus/ccwgroup/drivers/qeth/0.0.a110/priority_queueing
```

Possible results are:

by VLAN headers
: if `prio_queueing_vlan` is set.

by skb-priority
: if `prio_queueing_skb` is set.

by precedence
: if `prio_queueing_prec` is set.

by type of service
: if `prio_queuing_tos` is set.

always queue <*x*>
: otherwise.

To configure queueing by `skb->priority` setting for device 0.0.a110 issue:

```
# echo prio_queueing_skb > /sys/bus/ccwgroup/drivers/qeth/0.0.a110/priority_queueing
```

Specifying the number of inbound buffers

Depending on the amount of available storage and the amount of traffic, you can assign 8 - 128 inbound buffers for each qeth group device.

Before you begin

The device must be offline while you specify the number of buffers for inbound traffic.

About this task

By default, the qeth device driver assigns 64 inbound buffers to OSA devices and 128 to HiperSockets devices.

The Linux memory usage for inbound data buffers for the devices is `(number of buffers)` × `(buffer size)`.

The buffer size is equivalent to the frame size, which depends on the type of CHPID:

- For an OSA-Express CHPID in QDIO mode: 64 KB
- For HiperSockets: depending on the HiperSockets CHPID definition, 16 KB, 24 KB, 40 KB, or 64 KB

Procedure

Set the buffer_count attribute to the number of inbound buffers you want to assign. Issue a command of the form:

```
# echo <number> > /sys/bus/ccwgroup/drivers/qeth/<device_bus_id>/buffer_count
```

Example

In this example, 64 inbound buffers are assigned to device 0.0.a000.

```
# echo 64 > /sys/bus/ccwgroup/drivers/qeth/0.0.a000/buffer_count
```

Specifying the relative port number

Use the portno sysfs attribute to specify the relative port number.

Before you begin

- This description applies to adapters that, per CHPID, show more than one port to Linux.
- The device must be offline while you specify the relative port number.

Procedure

By default, the qeth group device uses port 0. To use a different port, issue a command of the form:

```
# echo <integer> > /sys/bus/ccwgroup/drivers/qeth/<device_bus_id>/portno
```

Where <*integer*> is either 0 or 1.

Example

In this example, port 1 is assigned to the qeth group device.

```
# echo 1 > /sys/bus/ccwgroup/drivers/qeth/0.0.a000/portno
```

Finding out the type of your network adapter

Use the card_type attribute to find out the type of the network adapter through which your device is connected.

Procedure

You can find out the type of the network adapter through which your device is connected. To find out the type, read the card_type attribute of the device. Issue a command of the form:

```
# cat /sys/bus/ccwgroup/drivers/qeth/<device_bus_id>/card_type
```

The card_type attribute gives information about both the type of network adapter and the type of network link (if applicable) available at the card's ports. See Table 46 on page 242 for details.

Table 46. Possible values of card_type and what they mean

Value of card_type	Adapter type	Link type
OSD_10GIG	OSA card in OSD mode	10 Gigabit Ethernet
OSD_1000		Gigabit Ethernet, 1000BASE-T
OSD_GbE_LANE		Gigabit Ethernet, LAN Emulation
OSD_FE_LANE		LAN Emulation
OSD_Express		Unknown
	OSA for NCP	ESCON/CDLC bridge or N/A
OSM	OSA-Express for Unified Resource Manager	1000BASE-T
OSX	OSA-Express for zBX	10 Gigabit Ethernet
HiperSockets	HiperSockets, CHPID type IQD	N/A
Virtual NIC QDIO	VSWITCH or guest LAN based on OSA	N/A
Virtual NIC Hiper	Guest LAN based on HiperSockets	N/A
Unknown	Other	

Example

To find the card_type of a device 0.0.a100 issue:

```
# cat /sys/bus/ccwgroup/drivers/qeth/0.0.a100/card_type
OSD_100
```

Setting a device online or offline

Use the online device group attribute to set a device online or offline.

Procedure

To set a qeth group device online, set the online device group attribute to `1`. To set a qeth group device offline, set the online device group attribute to `0`. Issue a command of the form:

```
# echo <flag> > /sys/bus/ccwgroup/drivers/qeth/<device_bus_id>/online
```

Setting a device online associates it with an interface name (see "Finding out the interface name of a qeth group device" on page 243).
Setting a device offline closes this network device. If IPv6 is active, you lose any IPv6 addresses set for this device. After you set the device online, you can restore lost IPv6 addresses only by issuing the **ip** or **ifconfig** commands again.

Example

To set a qeth device with bus ID 0.0.a100 online issue:

```
# echo 1 > /sys/bus/ccwgroup/drivers/qeth/0.0.a100/online
```

To set the same device offline issue:

```
# echo 0 > /sys/bus/ccwgroup/drivers/qeth/0.0.a100/online
```

Finding out the interface name of a qeth group device

When a qeth group device is set online, an interface name is assigned to it.

Procedure

To find the interface name of a qeth group device, either:

- Obtain a mapping for all qeth interfaces and devices by issuing the **lsqeth -p** command.
- Find out the interface name of a qeth group device for which you know the device bus-ID by reading the group device's if_name attribute. Issue a command of the form:

```
# cat /sys/bus/ccwgroup/drivers/qeth/<device_bus_id>/if_name
```

Example

```
# cat /sys/bus/ccwgroup/drivers/qeth/0.0.a100/if_name
eth0
```

Finding out the bus ID of a qeth interface

Use the **lsqeth -p** command to obtain a mapping for all qeth interfaces and devices. Alternatively, you can use sysfs.

Procedure

To find the device bus-ID that corresponds to an interface, either:

- Use the **lsqeth -p** command.
- Use the readlink command. For each network interface, there is a directory in sysfs under `/sys/class/net/`, for example, `/sys/class/net/eth0` for interface eth0. This directory contains a symbolic link “device” to the corresponding device in `/sys/devices`. Read this link to find the device bus-ID of the device that corresponds to the interface.

Example

To find out which device bus-ID corresponds to an interface eth0 issue, for example:

```
# readlink /sys/class/net/eth0/device
../../../0.0.a100
```

In this example, eth0 corresponds to the device bus-ID 0.0.a100.

Activating an interface

Use the **ip** command or equivalent to activate an interface.

Before you begin

- You must know the interface name of the qeth group device (see “Finding out the interface name of a qeth group device” on page 243).
- You must know the IP address that you want to assign to the device.

About this task

The MTU size defaults to the correct settings for HiperSockets devices. For OSA-Express CHPIDs in QDIO mode, the default MTU size depends on the device mode, layer 2 or layer 3.

- For layer 2, the default MTU is 1500 bytes.
- For layer 3, the default MTU is 1492 bytes.

In most cases, the default MTU sizes are well suited for OSA-Express CHPIDs in QDIO mode. If your network is laid out for jumbo frames, increase the MTU size to a maximum of 9000 bytes for layer 2, or to 8992 bytes for layer 3. Exceeding the defaults for regular frames or the maximum frame sizes for jumbo frames might cause performance degradation. See *Open Systems Adapter-Express Customer's Guide and Reference*, SA22-7935 for more details about MTU size.

For HiperSockets, the maximum MTU size is restricted by the maximum frame size as announced by the Licensed Internal Code (LIC). The maximum MTU is equal to the frame size minus 8 KB. Hence, the possible frame sizes of 16 KB, 24 KB, 40 KB, or 64 KB result in maximum corresponding MTU sizes of 8 KB, 16 KB, 32 KB, or 56 KB.

The MTU size defaults to the correct settings for both HiperSockets and OSA-Express CHPIDs in QDIO mode. As a result, you do not need to specify the MTU size when you activate the interface.

On heavily loaded systems, MTU sizes that exceed 8 KB can lead to memory allocation failures for packets due to memory fragmentation. A symptom of this problem are messages of the form "order-N allocation failed" in the system log. In addition, network connections drop packets, possibly so frequently as to make the network interface unusable.

As a workaround, use MTU sizes at most of 8 KB (minus header size), even if the network hardware allows larger sizes. For example, HiperSockets or 10 Gigabit Ethernet allow larger sizes.

Procedure

You activate or deactivate network devices with **ip** or an equivalent command. For details of the **ip** command, see the **ip** man page.

Examples

- This example activates a HiperSockets CHPID with broadcast address 192.168.100.255:

```
# ip addr add 192.168.100.10/24 dev hsi0
# ip link set dev hsi0 up
```

- This example activates an OSA-Express CHPID in QDIO mode with broadcast address 192.168.100.255:

```
# ip addr add 192.168.100.11/24 dev eth0
# ip link set dev eth0 up
```

- This example reactivates an interface that was already activated and subsequently deactivated:

```
# ip link set dev eth0 up
```

Confirming that an IP address has been set under layer 3

There may be circumstances that prevent an IP address from being set, most commonly if another system in the network has set that IP address already.

About this task

The Linux network stack design does not allow feedback about IP address changes. If **ip** or an equivalent command fails to set an IP address on an OSA-Express network CHPID, a query with **ip** shows the address as being set on the interface although the address is not actually set on the CHPID.

There are usually failure messages about not being able to set the IP address or duplicate IP addresses in the kernel messages. You can find these messages in the output of the **dmesg** command. In SUSE Linux Enterprise Server 12 SP3, you can also find the messages in `/var/log/messages`.

If you are not sure whether an IP address was set properly or experience a networking problem, check the messages or logs to see if an error was encountered when setting the address. This also applies in the context of HiperSockets and to both IPv4 and IPv6 addresses. It also applies to whether an IP address has been set for IP takeover, for VIPA, or for proxy ARP.

Duplicate IP addresses

The OSA-Express adapter in QDIO mode recognizes duplicate IP addresses on the same OSA-Express adapter or in the network using ARP and prevents duplicates.

About this task

Several setups require duplicate addresses:

- To perform IP takeover you need to be able to set the IP address to be taken over. This address exists prior to the takeover. See “Taking over IP addresses” on page 257 for details.
- For proxy ARP you need to register an IP address for ARP that belongs to another Linux instance. See “Configuring a device for proxy ARP” on page 261 for details.
- For VIPA you need to assign the same virtual IP address to multiple devices. See “Configuring a device for virtual IP address (VIPA)” on page 262 for details.

You can use the **qethconf** command (see “qethconf - Configure qeth devices” on page 637) to maintain a list of IP addresses that your device can take over, a list of IP addresses for which your device can handle ARP, and a list of IP addresses that can be used as virtual IP addresses, regardless of any duplicates on the same OSA-Express adapter or in the LAN.

Deactivating an interface

You can deactivate an interface with **ip** or an equivalent command or by setting the network device offline.

About this task

Setting a device offline involves actions on the attached device, but deactivating a device only stops the interface logically within Linux.

Procedure

To deactivate an interface with **ip**. Issue a command of the form:

```
# ip link set dev <interface_name> down
```

Example

To deactivate eth0 issue:

```
# ip link set dev eth0 down
```

Recovering a device

You can use the recover attribute of a qeth group device to recover it in case of failure.

About this task

For example, error messages in `/var/log/messages` from the qeth, qdio, or cio kernel modules might inform you of a malfunctioning device.

Procedure

Issue a command of the form:

```
# echo 1 > /sys/bus/ccwgroup/drivers/qeth/<device_bus_id>/recover
```

Example

```
# echo 1 > /sys/bus/ccwgroup/drivers/qeth/0.0.a100/recover
```

Configuring checksum offload operations

Some operations can be offloaded to the OSA adapter, thus relieving the burden on the host CPU. The qeth device driver supports checksum offloading for IP, TCP and UDP network packets.

The qeth device driver supports offloading the following checksum operations on both layer 2 and layer 3:

- Inbound (receive) checksum calculations
- Outbound (send) checksum calculations

The qeth device driver also supports offloading TSO segmentation, see "Enabling and disabling TCP segmentation offload" on page 256.

VLAN interfaces inherit offload settings from their base interface.

The offload operations can be set with the Linux **ethtool** command, version 6 or later. See the **ethtool** man page for details. The following abbreviated example shows some offload settings:

```
# ethtool -k eth0
Features for eth0:
rx-checksumming: on
tx-checksumming: on
 tx-checksum-ipv4: on
 tx-checksum-ip-generic: off [fixed]
 tx-checksum-ipv6: off [fixed]
 tx-checksum-fcoe-crc: off [fixed]
 tx-checksum-sctp: off [fixed]
scatter-gather: on
 tx-scatter-gather: on
 tx-scatter-gather-fraglist: off [fixed]
tcp-segmentation-offload: on
 tx-tcp-segmentation: on
 tx-tcp-ecn-segmentation: off [fixed]
 tx-tcp6-segmentation: off [fixed]
udp-fragmentation-offload: off [fixed]
generic-segmentation-offload: off [requested on]
generic-receive-offload: on
large-receive-offload: off [fixed]
...
```

Turning inbound checksum calculations on and off

A checksum calculation is a form of redundancy check to protect the integrity of data. In general, checksum calculations are used for network data.

Procedure

The qeth device driver supports offloading checksum calculations on inbound packets to the OSA feature.

To enable or disable checksum calculations by the OSA feature, issue a command of this form:

```
# ethtool -K <interface_name> rx <value>
```

where <*value*> is on or off.

Examples

- To let the OSA feature calculate the inbound checksum for network device eth0, issue

  ```
  # ethtool -K eth0 rx on
  ```

- To let the host CPU calculate the inbound checksum for network device eth0, issue

  ```
  # ethtool -K eth0 rx off
  ```

Turning outbound checksum calculations on and off

The qeth device driver supports offloading outbound (send) checksum calculations to the OSA feature.

About this task

You can enable or disable the OSA feature calculating the outbound checksums by using the **ethtool** command.

Attention: For OSA-Express3 and earlier: When outbound checksum calculations are offloaded, the OSA feature performs the checksum calculations. Offloaded checksum calculations only applies to packets that go out to the LAN or come in from the LAN. Linux instances that share an OSA port exchange packages directly. The packages are forwarded by the OSA adapter but do not go out on the LAN and no checksum offload is performed. The qeth device driver cannot detect this, and so cannot issue any warning about it.

Procedure

Issue a command of the form:

```
# ethtool -K <interface_name> tx <value>
```

where <*value*> is on or off.

Example

- To let the OSA feature calculate the outbound checksum for network device eth0, issue

```
# ethtool -K eth0 tx on
```

- To let the host CPU calculate the outbound checksum for network device eth0, issue

```
# ethtool -K eth0 tx off
```

Isolating data connections

You can restrict communications between operating system instances that share an OSA port on an OSA adapter.

About this task

A Linux instance can configure the OSA adapter to prevent any direct package exchange between itself and other operating system instances that share an OSA adapter. This configuration ensures a higher degree of isolation than VLANs.

QDIO data connection isolation is configured as a policy. The policy is implemented as a sysfs attribute called isolation. Note that the attribute appears in sysfs regardless of whether the hardware supports the feature. The policy can take the following values:

none No isolation. This is the default.

drop Specifies the ISOLATION_DROP policy. All packets from guests that share an OSA adapter to the guest that has this policy configured are dropped automatically. The same holds for all packets that are sent by the guest that has this policy configured to guests on the same OSA card. All packets to

or from the isolated guest must have a target that is not hosted on the OSA card. You can accomplish this by a router hosted on a separate machine or a separate OSA adapter.

For example, assume that three Linux instances share an OSA adapter, but only one instance (Linux A) must be isolated. Then Linux A declares its OSA adapter (QDIO Data Connection to the OSA adapter) to be isolated. Any packet being sent to or from Linux A must pass at least the physical switch to which the shared OSA adapter is connected. Linux A cannot communicate with other instances that share the OSA adapter, here B or C. The two other instances could still communicate directly through the OSA adapter without the external switch in the network path (see Figure 42).

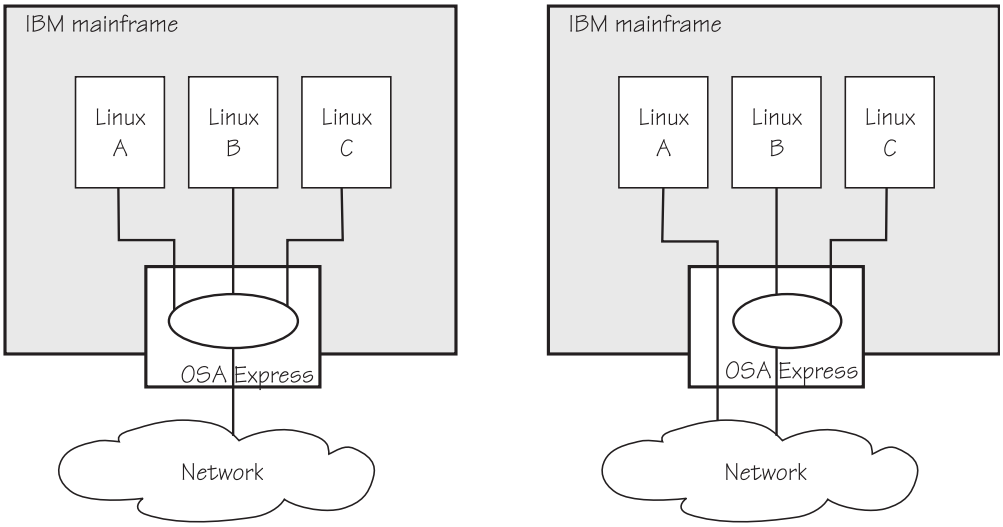

Figure 42. Linux instance A is isolated from instances B and C

forward

Specifies the ISOLATION_FORWARD policy. All packets are passed through a switch. The ISOLATION_FORWARD policy requires a network adapter in Virtual Ethernet Port Aggregator (VEPA) mode with an adjacent switch port configured for reflective relay mode.

To check whether the switch of the adapter is in reflective relay mode, read the sysfs attribute `switch_attrs`. The attribute lists all supported forwarding modes, with the currently active mode enclosed in square brackets. For example:

```
cat /sys/devices/qeth/0.0.f5f0/switch_attrs
802.1 [rr]
```

The example indicates that the adapter supports both 802.1 forwarding mode and reflective relay mode, and reflective relay mode (rr) is active.

Using a network adapter in VEPA mode achieves further isolation. VEPA mode forces traffic from the Linux guests to be handled by the external switch. For example, Figure 43 on page 250 shows instances A and B with ISOLATION_FORWARD specified for the policy. All traffic between A and B goes through the external switch. The rule set of the switch now determines which connections are possible. The graphic assumes that A can

communicate with B, but not with C.

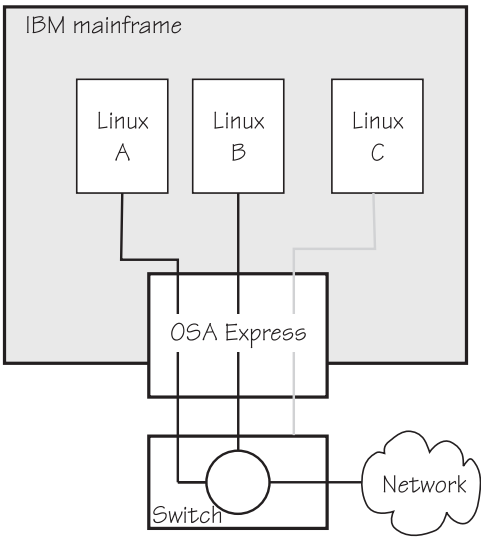

Figure 43. Traffic from Linux instance A and B is forced through an external switch

If the ISOLATION_FORWARD policy was enforced successfully, but the switch port later loses the reflective-relay capability, the device is set offline to prevent damage.

You can configure the policy regardless of whether the device is online. If the device is online, the policy is configured immediately. If the device is offline, the policy is configured when the device comes online.

Examples

- To check the current isolation policy:

```
# cat /sys/devices/qeth/0.0.f5f0/isolation
```

- To set the isolation policy to ISOLATION_DROP:

```
# echo drop > /sys/devices/qeth/0.0.f5f0/isolation
```

- To set the isolation policy to ISOLATION_FORWARD:

```
# echo "forward" > /sys/devices/qeth/0.0.f5f0/isolation
```

  If the switch is not capable of VEPA support, or VEPA support is not configured on the switch, then you cannot set the isolation attribute value to 'forward' while the device is online. If the switch does not support VEPA and you set the isolation value 'forward' while the device is offline, then the device cannot be set online until the isolation value is set back to 'drop' or 'none'.
- To set the isolation policy to none:

```
# echo "none" > /sys/devices/qeth/0.0.f5f0/isolation
```

When you use vNICs, VEPA mode must be enabled on the respective VSWITCH. See *z/VM Connectivity*, SC24-6174 for information about setting up data connection isolation on a VSWITCH.

Starting and stopping collection of QETH performance statistics

Use the performance_stats attribute to start and stop collection of QETH performance statistics.

About this task

For QETH performance statistics, there is a device group attribute called `/sys/bus/ccwgroup/drivers/qeth/<device_bus_id>/performance_stats`.

This attribute is initially set to 0, that is, QETH performance data is not collected.

Procedure

To start collection for a specific QETH device, write 1 to the attribute. For example:

```
echo 1 > /sys/bus/ccwgroup/drivers/qeth/<device_bus_id>/performance_stats
```

To stop collection write 0 to the attribute, for example:

```
echo 0 > /sys/bus/ccwgroup/drivers/qeth/<device_bus_id>/performance_stats
```

Stopping QETH performance data collection for a specific QETH device is accompanied by a reset of current statistic values to zero.
To display QETH performance statistics, use the **ethtool** command. See the **ethtool** man page for details.

Example

The following example shows statistic and device driver information:

```
 # ethtool -S eth0
NIC statistics:
     rx skbs: 86
     rx buffers: 85
     tx skbs: 86
     tx buffers: 86
     tx skbs no packing: 86
     tx buffers no packing: 86
     tx skbs packing: 0
     tx buffers packing: 0
     tx sg skbs: 0
     tx sg frags: 0
     rx sg skbs: 0
     rx sg frags: 0
     rx sg page allocs: 0
     tx large kbytes: 0
     tx large count: 0
     tx pk state ch n->p: 0
     tx pk state ch p->n: 0
     tx pk watermark low: 2
     tx pk watermark high: 5
     queue 0 buffer usage: 0
     queue 1 buffer usage: 0
     queue 2 buffer usage: 0
     queue 3 buffer usage: 0
     rx handler time: 856
     rx handler count: 84
     rx do_QDIO time: 16
     rx do_QDIO count: 11
     tx handler time: 330
     tx handler count: 87
     tx time: 1236
     tx count: 86
     tx do_QDIO time: 997
     tx do_QDIO count: 86
     tx csum: 0
     tx lin: 0
     cq handler count: 0
     cq handler time: 0
# ethtool -i eth0
driver: qeth_l3
version: 1.0
firmware-version: 087a
bus-info: 0.0.f5f0/0.0.f5f1/0.0.f5f2
supports-statistics: yes
supports-test: no
supports-eeprom-access: no
supports-register-dump: no
supports-priv-flags: no
```

Capturing a hardware trace

Hardware traces are intended for use by the IBM service organization. Hardware tracing is turned off by default. Turn on the hardware-tracing feature only when instructed to do so by IBM service.

Before you begin

- The OSA-Express adapter must support the hardware-tracing feature.
- The qeth device must be online to return valid values of the `hw_trap` attribute.

About this task

When errors occur on an OSA-Express adapter, both software and hardware traces must be collected. The hardware-tracing feature requests a hardware trace if an error is detected. This feature makes it possible to correlate the hardware trace with the device driver trace. If the hardware-tracing feature is activated, traces are captured automatically, but you can also start the capturing yourself.

Procedure

To activate or deactivate the hardware-tracing feature, issue a command of the form:

```
# echo <value> > /sys/devices/qeth/<device_bus_id>/hw_trap
```

Where <*value*> can be:

arm If the hardware-tracing feature is supported, write `arm` to the `hw_trap` sysfs attribute to activate it. If the hardware-tracing feature is present and activated, the `hw_trap` sysfs attribute has the value `arm`.

disarm
Write `disarm` to the `hw_trap` sysfs attribute to turn off the hardware-tracing feature. If the hardware-tracing feature is not present or is turned off, the `hw_trap` sysfs attribute has the value `disarm`. This setting is the default.

trap (Write only) Capture a hardware trace. Hardware traces are captured automatically, but if asked to do so by IBM service, you can start the capturing yourself by writing `trap` to the `hw_trap` sysfs attribute. The hardware trap function must be set to arm.

Examples

In this example the hardware-tracing feature is activated for qeth device 0.0.a000:

```
# echo arm > /sys/devices/qeth/0.0.a000/hw_trap
```

In this example a trace capture is started on qeth device 0.0.a000:

1. Check that the `hw_trap` sysfs attribute is set to arm:

   ```
   # cat /sys/devices/qeth/0.0.a000/hw_trap
   arm
   ```

2. Start the capture:

   ```
   # echo trap > /sys/devices/qeth/0.0.a000/hw_trap
   ```

Working with qeth devices in layer 3 mode

Tasks you can perform on qeth devices in layer 3 mode include setting up a router, configuring offload operations, and taking over IP addresses.

Use the layer 2 attribute to set the mode. See “Setting the layer2 attribute” on page 237 about setting the mode. See “Layer 2 and layer 3” on page 223 for general information about the layer 2 and layer 3 disciplines.

Setting up a Linux router

By default, your Linux instance is not a router. Depending on your IP version, IPv4 or IPv6 you can use the route4 or route6 attribute of your qeth device to define it as a router.

Before you begin

- A suitable hardware setup must be in place that enables your Linux instance to act as a router.
- The Linux instance is set up as a router. To configure Linux running as a z/VM guest or in an LPAR as a router, IP forwarding must be enabled in addition to setting the route4 or route6 attribute.

  For IPv4, enable IP forwarding by issuing:

  ```
  # sysctl -w net.ipv4.conf.all.forwarding=1
  ```

  For IPv6, enable IP forwarding by issuing:

  ```
  # sysctl -w net.ipv6.conf.all.forwarding=1
  ```

About this task

You can set the route4 or route6 attribute dynamically, while the qeth device is online.

The same values are possible for route4 and route6 but depend on the type of CHPID, as shown in Table 47.

Table 47. Summary of router setup values

Router specification	OSA-Express CHPID in QDIO mode	HiperSockets CHPID
primary_router	Yes	No
secondary_router	Yes	No
primary_connector	No	Yes
secondary_connector	No	Yes
multicast_router	Yes	Yes
no_router	Yes	Yes

Both types of CHPIDs accept:

multicast_router
: causes the qeth driver to receive all multicast packets of the CHPID. For a unicast function for HiperSockets see “HiperSockets Network Concentrator” on page 275.

no_router
: is the default. You can use this value to reset a router setting to the default.

An OSA-Express CHPID in QDIO mode accepts the following values:

primary_router
: to make your Linux instance the principal connection between two networks.

secondary_router
to make your Linux instance a backup connection between two networks.

A HiperSockets CHPID accepts the following values, provided the microcode level supports the feature:

primary_connector
to make your Linux instance the principal connection between a HiperSockets network and an external network (see "HiperSockets Network Concentrator" on page 275).

secondary_connector
to make your Linux instance a backup connection between a HiperSockets network and an external network (see "HiperSockets Network Concentrator" on page 275).

Example

In this example, two Linux instances, "Linux P" and "Linux S", running on an IBM mainframe use OSA-Express to act as primary and secondary routers between two networks. IP forwarding must be enabled for Linux in an LPAR or as a z/VM guest to act as a router. In SUSE Linux Enterprise Server 12 SP3 you can set IP forwarding permanently in `/etc/sysctl.conf` or dynamically with the **sysctl** command.

Mainframe configuration:

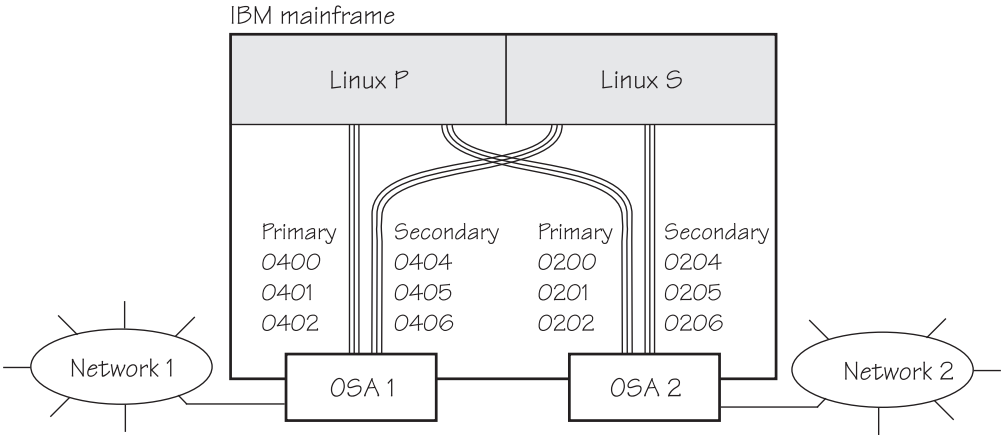

Figure 44. Mainframe configuration

It is assumed that both Linux instances are configured as routers in the LPARs or in z/VM.

Linux P configuration:

To create the qeth group devices:

```
# echo 0.0.0400,0.0.0401,0.0.0402 > /sys/bus/ccwgroup/drivers/qeth/group
# echo 0.0.0200,0.0.0201,0.0.0202 > /sys/bus/ccwgroup/drivers/qeth/group
```

To make Linux P a primary router for IPv4:

```
# echo primary_router > /sys/bus/ccwgroup/drivers/qeth/0.0.0400/route4
# echo primary_router > /sys/bus/ccwgroup/drivers/qeth/0.0.0200/route4
```

Linux S configuration:

To create the qeth group devices:

```
# echo 0.0.0404,0.0.0405,0.0.0406 > /sys/bus/ccwgroup/drivers/qeth/group
# echo 0.0.0204,0.0.0205,0.0.0206 > /sys/bus/ccwgroup/drivers/qeth/group
```

To make Linux S a secondary router for IPv4:

```
# echo secondary_router > /sys/bus/ccwgroup/drivers/qeth/0.0.0404/route4
# echo secondary_router > /sys/bus/ccwgroup/drivers/qeth/0.0.0204/route4
```

In this example, qeth device 0.0.1510 is defined as a primary router for IPv6:

```
/sys/bus/ccwgroup/drivers/qeth # cd 0.0.1510
# echo 1 > online
# echo primary_router > route6
# cat route6
primary router
```

See "HiperSockets Network Concentrator" on page 275 for further examples.

Enabling and disabling TCP segmentation offload

Offloading the TCP segmentation operation from the Linux network stack to the adapter can lead to enhanced performance for interfaces with predominately large outgoing packets.

Large send (TCP segmentation offload) is supported for OSA connections on layer 3 only. VLAN interfaces inherit offload settings from their base interface.

Procedure

To support TCP segmentation offload (TSO), a network device must support outbound (TX) checksumming and scatter gather. For this reason, you must turn on scatter gather and outbound checksumming prior to configuring TSO. All three options can be turned on or off with a single **ethtool** command of the form:

```
# ethtool -K <interface_name> tx <value> sg <value> tso <value>
```

where <*value*> is either on or off.
For more information about TX checksumming, see "Turning outbound checksum calculations on and off" on page 247.

Attention: When TCP segmentation is offloaded, the OSA feature performs the calculations. Offloaded calculations apply only to packets that go out to the LAN or come in from the LAN. Linux instances that share an OSA port exchange packages directly. The packages are forwarded by the OSA adapter but do not go out on the LAN and no TCP segmentation calculation is performed. The qeth device driver cannot detect this, and so cannot issue any warning about it.

Examples

- To enable TSO for a network device eth0 issue:

```
# ethtool -K eth0 tx on sg on tso on
```

- To disable TSO for a network device eth0 issue:

```
# ethtool -K eth0 tx off sg off tso off
```

Faking broadcast capability

It is possible to fake the broadcast capability for devices that do not support broadcasting.

Before you begin

- You can fake the broadcast capability only on devices that do not support broadcast.
- The device must be offline while you enable faking broadcasts.

About this task

For devices that support broadcast, the broadcast capability is enabled automatically.

To find out whether a device supports broadcasting, use the **ip** command. If the resulting list shows the BROADCAST flag, the device supports broadcast. This example shows that the device eth0 supports broadcast:

```
# ip -s link show dev eth0
3: eth0: <BROADCAST,MULTICAST,UP,LOWER_UP> mtu 1492 qdisc pfifo_fast qlen 1000
    link/ether 00:11:25:bd:da:66 brd ff:ff:ff:ff:ff:ff
    RX: bytes  packets  errors  dropped overrun mcast
    236350     2974     0       0       0       9
    TX: bytes  packets  errors  dropped carrier collsns
    374443     1791     0       0       0       0
```

Some processes, for example, the *gated* routing daemon, require the devices' broadcast capable flag to be set in the Linux network stack.

Procedure

To set the broadcast capable flag for devices that do not support broadcast, set the fake_broadcast attribute of the qeth group device to 1. To reset the flag, set it to 0. Issue a command of the form:

```
# echo <flag> > /sys/bus/ccwgroup/drivers/qeth/<device_bus_id>/fake_broadcast
```

Example

In this example, a device 0.0.a100 is instructed to pretend that it can broadcast.

```
# echo 1 > /sys/bus/ccwgroup/drivers/qeth/0.0.a100/fake_broadcast
```

Taking over IP addresses

You can configure IP takeover if the layer2 option is not enabled. If you enabled the layer2 option, you can configure for IP takeover as you would in a distributed server environment.

About this task

For information about the layer2 option, see “MAC headers in layer 2 mode” on page 226.

Taking over an IP address overrides any previous allocation of this address to another LPAR. If another LPAR on the same CHPID already registered for that IP address, this association is removed.

An OSA-Express CHPID in QDIO mode can take over IP addresses from any z Systems operating system. IP takeover for HiperSockets CHPIDs is restricted to taking over addresses from other Linux instances in the same Central Electronics Complex (CEC).

IP address takeover between multiple CHPIDs requires ARP for IPv4 and Neighbor Discovery for IPv6. OSA-Express handles ARP transparently, but not Neighbor Discovery.

There are three stages to taking over an IP address:

Stage 1: Ensure that your qeth group device is enabled for IP takeover

Stage 2: Activate the address to be taken over for IP takeover

Stage 3: Issue a command to take over the address

Stage 1: Enabling a qeth group device for IP takeover

For OSA-Express and HiperSockets CHPIDs, both the qeth group device that is to take over an IP address and the device that surrenders the address must be enabled for IP takeover.

Procedure

By default, qeth devices are not enabled for IP takeover. To enable a qeth group device for IP address takeover set the enable device group attribute to `1`. To switch off the takeover capability set the enable device group attribute to `0`. In sysfs, the enable attribute is located in a subdirectory `ipa_takeover`. Issue a command of the form:

```
# echo <flag> > /sys/bus/ccwgroup/drivers/qeth/<device_bus_id>/ipa_takeover/enable
```

Example

In this example, a device 0.0.a500 is enabled for IP takeover:

```
# echo 1 > /sys/bus/ccwgroup/drivers/qeth/0.0.a500/ipa_takeover/enable
```

Stage 2: Activating and deactivating IP addresses for takeover

The qeth device driver maintains a list of IP addresses that qeth group devices can take over or surrender. To enable Linux to take over an IP-address or to surrender an address, the address must be added to this list.

Procedure

Use the **qethconf** command to add IP addresses to the list.

- To display the list of IP addresses that are activated for IP takeover issue:

```
# qethconf ipa list
```

- To activate an IP address for IP takeover, add it to the list. Issue a command of the form:

```
# qethconf ipa add <ip_address>/<mask_bits> <interface_name>
```

- To deactivate an IP address delete it from the list. Issue a command of the form:

```
# qethconf ipa del <ip_address>/<mask_bits> <interface_name>
```

  In these commands, *<ip_address>/<mask_bits>* is the range of IP addresses to be activated or deactivated. See "qethconf - Configure qeth devices" on page 637 for more details about the **qethconf** command.

IPv4 example:

In this example, there is only one range of IP addresses (192.168.10.0 to 192.168.10.255) that can be taken over by device hsi0.

List the range of IP addresses (192.168.10.0 to 192.168.10.255) that can be taken over by device hsi0.

```
# qethconf ipa list
ipa add 192.168.10.0/24 hsi0
```

The following command adds a range of IP addresses that can be taken over by device eth0.

```
# qethconf ipa add 192.168.11.0/24 eth0
qethconf: Added 192.168.11.0/24 to /sys/class/net/eth0/device/ipa_takeover/add4.
qethconf: Use "qethconf ipa list" to check for the result
```

Listing the activated IP addresses now shows both ranges of addresses.

```
# qethconf ipa list
ipa add 192.168.10.0/24 hsi0
ipa add 192.168.11.0/24 eth0
```

The following command deletes the range of IP addresses that can be taken over by device eth0.

```
# qethconf ipa del 192.168.11.0/24 eth0
qethconf: Deleted 192.168.11.0/24 from /sys/class/net/eth0/device/ipa_takeover/del4.
qethconf: Use "qethconf ipa list" to check for the result
```

IPv6 example:

The following command adds one range of IPv6 addresses, fec0:0000:0000:0000:0000:0000:0000:0000 to fec0:0000:0000:0000:FFFF:FFFF:FFFF:FFFF, that can be taken over by device eth2.

Add a range of IP addresses:

```
qethconf ipa add fec0::/64 eth2
qethconf: Added fec0:0000:0000:0000:0000:0000:0000:0000/64 to
          sysfs entry /sys/class/net/eth2/device/ipa_takeover/add6.
qethconf: For verification please use "qethconf ipa list"
```

Listing the activated IP addresses now shows the range of addresses:

```
qethconf ipa list
...
ipa add fec0:0000:0000:0000:0000:0000:0000:0000/64 eth2
```

The following command deletes the IPv6 address range that can be taken over by eth2:

```
qethconf ipa del fec0:0000:0000:0000:0000:0000:0000:0000/64 eth2:
qethconf: Deleted fec0:0000:0000:0000:0000:0000:0000:0000/64 from
          sysfs entry /sys/class/net/eth2/device/ipa_takeover/del6.
qethconf: For verification please use "qethconf ipa list"
```

Stage 3: Issuing a command to take over the address

To complete taking over a specific IP address and remove it from the CHPID or LPAR that previously held it, issue an **ip addr** or equivalent command.

Before you begin

- Both the device that is to take over the IP address and the device that is to surrender the IP address must be enabled for IP takeover. This rule applies to the devices on both OSA-Express and HiperSockets CHPIDs. (See "Stage 1: Enabling a qeth group device for IP takeover" on page 258).
- The IP address to be taken over must have been activated for IP takeover (see "Stage 2: Activating and deactivating IP addresses for takeover" on page 258).

About this task

Be aware of the information in "Confirming that an IP address has been set under layer 3" on page 245 when using IP takeover.

Examples

IPv4 example:

To make a device hsi0 take over IP address 192.168.10.22 issue:

```
# ip addr add 192.168.10.22/24 dev hsi0
```

For IPv4, the IP address you are taking over must be different from the one that is already set for your device. If your device already has the IP address it is to take over, you must issue two commands: First remove the address to be taken over if it is already there. Then add the IP address to be taken over.

For example, to make a device hsi0 take over IP address 192.168.10.22 if hsi0 is already configured to have IP address 192.168.10.22 issue:

```
# ip addr del 192.168.10.22/24 dev hsi0
# ip addr add 192.168.10.22/24 dev hsi0
```

IPv6 example:

To make a device eth2 take over fec0::111:25ff:febd:d9da/64 issue:

```
ip addr add fec0::111:25ff:febd:d9da/64 nodad dev eth2
```

For IPv6, setting the **nodad** (no duplicate address detection) option ensures that the eth2 interface uses the IP address fec0::111:25ff:febd:d9da/64. Without the **nodad** option, the previous owner of the IP address might prevent the takeover by responding to a duplicate address detection test.

The IP address you are taking over must be different from the one that is already set for your device. If your device already has the IP address it is to take over you must issue two commands: First remove the address to be taken over if it is already there. Then add the IP address to be taken over.

For example, to make a device eth2 take over IP address fec0::111:25ff:febd:d9da/64 when eth2 is already configured to have that particular IP address issue:

```
ip addr del fec0::111:25ff:febd:d9da/64 nodad dev eth2
ip addr add fec0::111:25ff:febd:d9da/64 nodad dev eth2
```

Configuring a device for proxy ARP

You can configure a device for proxy ARP if the layer2 option is not enabled. If you have enabled the layer2 option, you can configure for proxy ARP as you would in a distributed server environment.

Before you begin

Configure only qeth group devices that are set up as routers for proxy ARP.

About this task

For information about the layer2 option, see "MAC headers in layer 2 mode" on page 226.

The qeth device driver maintains a list of IP addresses for which a qeth group device handles ARP and issues gratuitous ARP packets. For more information about proxy ARP, see

`http://www.cisco.com/c/en/us/support/docs/ip/dynamic-address-allocation-resolution/13718-5.html`

Use the **qethconf** command to display this list or to change the list by adding and removing IP addresses (see "qethconf - Configure qeth devices" on page 637).

Be aware of the information in "Confirming that an IP address has been set under layer 3" on page 245 when working with proxy ARP.

Example

Figure 45 on page 262 shows an environment where proxy ARP is used.

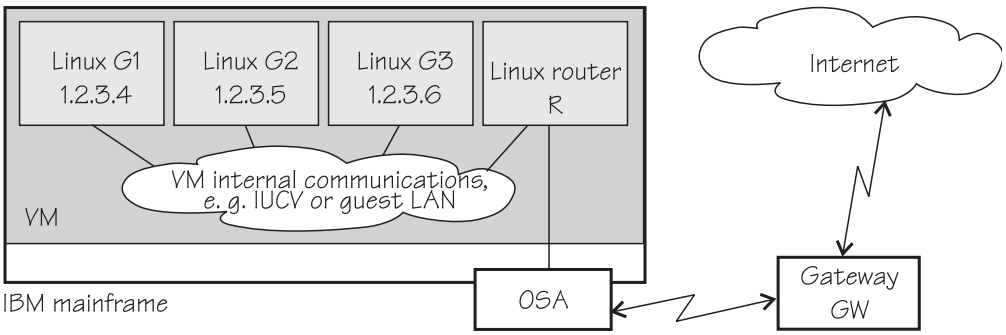

Figure 45. Example of proxy ARP usage

G1, G2, and G3 are instances of Linux on z/VM (connected, for example, through a guest LAN to a Linux router R), reached from GW (or the outside world) via R. R is the ARP proxy for G1, G2, and G3. That is, R agrees to take care of packets destined for G1, G2, and G3. The advantage of using proxy ARP is that GW does not need to know that G1, G2, and G3 are behind a router.

To receive packets for 1.2.3.4, so that it can forward them to G1 1.2.3.4, R would add 1.2.3.4 to its list of IP addresses for proxy ARP for the interface that connects it to the OSA adapter.

```
# qethconf parp add 1.2.3.4 eth0
qethconf: Added 1.2.3.4 to /sys/class/net/eth0/device/rxip/add4.
qethconf: Use "qethconf parp list" to check for the result
```

After issuing similar commands for the IP addresses 1.2.3.5 and 1.2.3.6 the proxy ARP configuration of R would be:

```
# qethconf parp list
parp add 1.2.3.4 eth0
parp add 1.2.3.5 eth0
parp add 1.2.3.6 eth0
```

Configuring a device for virtual IP address (VIPA)

You can configure a device for VIPA if the layer2 option is not enabled. If you enabled the layer2 option, you can configure for VIPA as you would in a distributed server environment.

About this task

For information about the layer2 option, see “MAC headers in layer 2 mode” on page 226.

z Systems use VIPAs to protect against certain types of hardware connection failure. You can assign VIPAs that are independent from particular adapter. VIPAs can be built under Linux using *dummy* devices (for example, “dummy0” or “dummy1”).

The qeth device driver maintains a list of VIPAs that the OSA-Express adapter accepts for each qeth group device. Use the **qethconf** utility to add or remove VIPAs (see “qethconf - Configure qeth devices” on page 637).

For an example of how to use VIPA, see "Scenario: VIPA – minimize outage due to adapter failure" on page 266.

Be aware of "Confirming that an IP address has been set under layer 3" on page 245 when you work with VIPAs.

Configuring a HiperSockets device for AF_IUCV addressing

Use the `hsuid` attribute of a HiperSockets device in layer 3 mode to identify it to the AF_IUCV addressing family support.

Before you begin

- Support for AF_IUCV based connections through real HiperSockets requires Completion Queue Support.
- The device must be set up for AF_IUCV addressing (see "Setting up HiperSockets devices for AF_IUCV addressing" on page 324).

Procedure

To set an identifier, issue a command of this form:

```
# echo <value> > /sys/bus/ccwgroup/drivers/qeth/0.0.a007/hsuid
```

The identifier is case-sensitive and must adhere to these rules:

- It must be 1 - 8 characters.
- It must be unique across your environment.
- It must not match any z/VM user ID in your environment. The AF_IUCV addressing family support also supports z/VM IUCV connections.

Example

In this example, MYHOST01 is set as the identifier for a HiperSockets device with bus ID `0.0.a007`.

```
# echo MYHOST01 > /sys/bus/ccwgroup/drivers/qeth/0.0.a007/hsuid
```

Working with qeth devices in layer 2 mode

Tasks that you can perform on qeth devices in layer 2 mode include setting up a OSA or HiperSockets bridge port and configuring notification behavior for the bridge port.

Use the layer2 attribute to set the mode. See "Setting the layer2 attribute" on page 237 about setting the mode. See "Layer 2 and layer 3" on page 223 for general information about the layer 2 and layer 3 disciplines.

Configuring a network device as a member of a Linux bridge

You can define an OSA or HiperSockets device to be a bridge port, which allows it to act as a member of a Linux software bridge. Use the `bridge_role` attribute of a network device in layer 2 to make it receive all traffic with unknown destination MAC addresses.

Before you begin

To use the bridging support, you need OSA or HiperSockets hardware that supports layer 2 SETBRIDGEPORT functionality.

You can have one active bridge port per Internal Queued Direct Communication (IQD) channel. You can have either only secondary bridge ports, or one primary and several secondary bridge ports.

A HiperSockets bridgeport requires that Linux runs as a z/VM guest.

For more information about the bridge port concept, see "Layer 2 bridge port function" on page 229.

About this task

The following sysfs attributes control the bridge port functions. The attributes can be found in the `/sys/bus/ccwgroup/drivers/qeth/<device_bus_id>` directory.

`bridge_role`
Read-write attribute that controls the role of the port. Valid values are:

primary
Assigns the port the primary bridge port role.

secondary
Assigns the port a secondary bridge port role.

none Revokes existing bridge port roles and indicates that no role is assigned.

Assigning a role directly to a port prevents use of the **`bridge_reflect_promisc`** attribute.

`bridge_state`
Read-only attribute that shows the state of the port. Valid values are:

active The port is assigned a bridge port role and is switched into active state by the adapter. The device receives frames that are addressed to unknown MAC addresses.

standby
The port is assigned a bridge port role, but is not currently switched into active state by the adapter. The device does not receive frames that are destined to unknown MAC addresses.

inactive
The port is not assigned a bridge port role.

`bridge_hostnotify`
HiperSockets only: Read-write attribute that controls the sending of notifications for the port. When you enable notifications (even if notifications were already enabled), udev events are emitted for all currently connected communication peers in quick succession. After that, a udev event is emitted every time a communication peer is connected, or a previously connected peer is disconnected. Any user space program that monitors these events must repopulate its list of registered peers every time the status of the bridge port device changes to enable notifications.

Valid values are:

1 The port is set to send notifications.

0 Notifications are turned off.

Notifications about the change of the state of bridge ports, and (if enabled) about registration and deregistration of communication peers on the LAN are delivered as udev events. The events are described in the file `Documentation/s390/qeth.txt` in the Linux kernel source tree.

bridge_reflect_promisc
Read-write attribute that, when set, makes the bridge-port role of the port follow ("reflect") the promiscuity flag (IFF_PROMISC) of the corresponding Linux network interface. You can specify the following values:

none Setting and resetting the promiscuous mode on the network interface has no effect on the bridge-port role of the underlying port.

primary
Setting or resetting the promiscuous mode on the network interface that is served by this device causes the driver to attempt assigning (or resetting) the primary role to the port. If a port with the primary role exists, assignment fails.

secondary
Setting or resetting the promiscuous mode on the network interface that is served by this device causes the driver to attempt assigning (or resetting) the secondary role to the port.

Setting **bridge_reflect_promisc** to anything but **none** causes the **bridge_role** attribute to become read-only. The role of a port changes as a result of setting or unsetting the promiscuity flag (IFF_PROMISC) of the corresponding network interface. You can check the currently assigned role by reading the **bridge_role** attribute.

Procedure

1. To configure a network device as a bridge, issue a command of this form:

```
# echo <value> > /sys/bus/ccwgroup/drivers/qeth/<device_bus_id>/bridge_role
```

Setting the **bridge_role** attribute requires the **bridge_reflect_promisc** attribute to be **none**. Alternatively, to make the bridge-port role of the port follow the promiscuity flag (IFF_PROMISC) of the corresponding Linux network interface, issue a command of the following form:

```
# echo <value> > /sys/bus/ccwgroup/drivers/qeth/<device_bus_id>/bridge_reflect_promisc
```

where valid values are:

- primary
- secondary
- none

2. Check the state of the bridge port by reading the `bridge_state` attribute. Issue a command of this form:

```
# cat /sys/bus/ccwgroup/drivers/qeth/<device_bus_id>/bridge_state
```

where displayed values could be:

- active
- standby
- inactive

Example

In this example, a network device with bus ID `0.0.a007` is defined as a primary bridge port.

```
# echo primary > /sys/bus/ccwgroup/drivers/qeth/0.0.a007/bridge_role
# cat /sys/bus/ccwgroup/drivers/qeth/0.0.a007/bridge_state
active
```

What to do next

You can specify up to four secondary bridge ports together with one primary bridge port. If the primary bridge port fails, one of these bridge ports takes over. For each secondary bridge port, set `bridge_role` to secondary.

Scenario: VIPA – minimize outage due to adapter failure

Using VIPA you can assign IP addresses that are not associated with a particular adapter. VIPA thus minimizes outage that is caused by adapter failure.

For VIPA you can use:

Standard VIPA
: Standard VIPA is sufficient for applications, such as web servers, that do *not* open connections to other nodes.

Source VIPA (version 2.0.0 and later)
: Source VIPA is used for applications that open connections to other nodes. Use Source VIPA Extensions to work with multiple VIPAs per destination in order to achieve multipath load balancing.

Note:

1. See the information in "Confirming that an IP address has been set under layer 3" on page 245 concerning possible failure when you set IP addresses for OSA-Express features in QDIO mode (qeth driver).
2. The configuration file layout for Source VIPA changed since the 1.x versions. In the 2.0.0 version a policy is included. For details, see the readme file and the man pages that are provided with the package.

Standard VIPA

VIPA is a facility for assigning an IP address to a system, instead of to individual adapters. It is supported by the Linux kernel. The addresses can be in IPv4 or IPv6 format.

Setting up standard VIPA

To set up VIPA you must create a dummy device, ensure that your service listens to the IP address, and set up routing to it.

Procedure

Follow these main steps to set up VIPA in Linux:

1. Create a dummy device with a virtual IP address.
2. Ensure that your service (for example, the Apache web server) listens to the virtual IP address assigned in step 1.

3. Set up routes to the virtual IP address, on clients or gateways. To do so, you can use either:
   - Static routing (shown in the example of Figure 46).
   - Dynamic routing. For details of how to configure routes, you must see the documentation that is delivered with your routing daemon (for example, `zebra` or `gated`).

Adapter outage

If outage of an adapter occurs, you must switch adapters.

Procedure

- Under static routing:
  1. Delete the route that was set previously.
  2. Create an alternative route to the virtual IP address.
- Under dynamic routing, see the documentation that is delivered with your routing daemon for details.

Example of how to set up standard VIPA

This example shows you how to configure VIPA under static routing, and how to switch adapters when an adapter outage occurs.

About this task

Figure 46 shows the network adapter configuration that is used in the example.

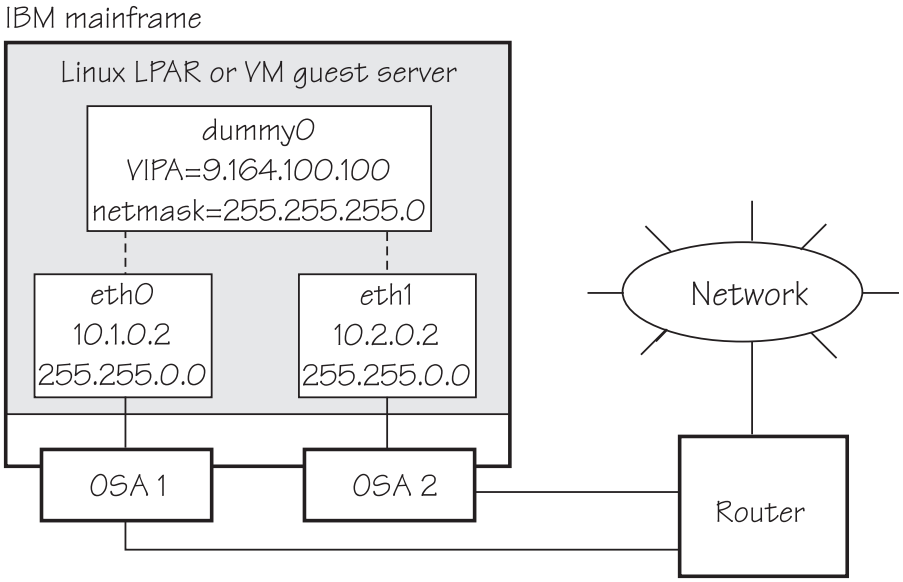

Figure 46. Example of using Virtual IP Address (VIPA)

Procedure

1. Define the real interfaces.

```
[server]# ip addr add 10.1.0.2/16 dev eth0
[server]# ip link set dev eth0 up
[server]# ip addr add 10.2.0.2/16 dev eth1
[server]# ip link set dev eth1 up
```

2. Ensure that the dummy module was loaded. If necessary, load it by issuing:

```
[server]# modprobe dummy
```

3. Create a dummy interface with a virtual IP address 9.164.100.100 and a netmask 255.255.255.0:

```
[server]# ip addr add 9.164.100.100/24 dev dummy0
[server]# ip link set dev dummy0 up
```

4. Enable the network devices for this VIPA so that it accepts packets for this IP address.
   - IPv4 example:

```
 [server]# qethconf vipa add 9.164.100.100 eth0
qethconf: Added 9.164.100.100 to /sys/class/net/eth0/device/vipa/add4.
qethconf: Use "qethconf vipa list" to check for the result
 [server]# qethconf vipa add 9.164.100.100 eth1
qethconf: Added 9.164.100.100 to /sys/class/net/eth1/device/vipa/add4.
qethconf: Use "qethconf vipa list" to check for the result
```

   - For IPv6, the address is specified in IPv6 format:

```
[server]# qethconf vipa add 2002::1234:5678 eth0
qethconf: Added 2002:0000:0000:0000:0000:0000:1235:5678 to /sys/class/net/eth0/device/vipa/add6.
qethconf: Use "qethconf vipa list" to check for the result
[server]# qethconf vipa add 2002::1235:5678 eth1
qethconf: Added 2002:0000:0000:0000:0000:0000:1235:5678 to /sys/class/net/eth1/device/vipa/add6.
qethconf: Use "qethconf vipa list" to check for the result
```

5. Ensure that the addresses are set:

```
[server]# qethconf vipa list
vipa add 9.164.100.100 eth0
vipa add 9.164.100.100 eth1
```

6. Ensure that your service (such as the Apache web server) listens to the virtual IP address.
7. Set up a route to the virtual IP address (static routing) so that VIPA can be reached through the gateway with address `10.1.0.2`.

```
[router]# ip route add 9.164.100.100 via 10.1.0.2
```

What to do next

Now assume that an adapter outage occurs. You must then:

1. Delete the previously created route.

```
[router]# ip route del 9.164.100.100
```

2. Create the alternative route to the virtual IP address.

```
[router]# ip route add 9.164.100.100 via 10.2.0.2
```

Source VIPA

Source VIPA is particularly suitable for high-performance environments. It selects one source address out of a range of source addresses when it replaces the source address of a socket.

Some operating system kernels cannot do load balancing among several connections with the same source and destination address over several interfaces. The solution is to use several source addresses.

To achieve load balancing, a policy must be selected in the policy section of the configuration file of Source VIPA (`/etc/src_vipa.conf`). In this policy section you can also specify several source addresses that are used for one destination. Source VIPA then applies the source address selection according to the rules of the policy that is selected in the configuration file.

This Source VIPA solution does not affect kernel stability. Source VIPA is controlled by a configuration file that contains flexible rules for when to use Source VIPA based on destination IP address ranges.

You can use IPv6 or IPv4 addresses for Source VIPA.

Setting up source VIPA

To set up source VIPA, define your address ranges in the configuration file.

Usage

To install:

An RPM is available for Source VIPA. The RPM is called `src_vipa-<version>.s390x.rpm`. Install the RPM as usual.

Configuration

With Source VIPA version 2.0.0 the configuration file changed: the policy section was added. The default configuration file is `/etc/src_vipa.conf`.

`/etc/src_vipa.conf` or the file pointed to by the environment variable SRC_VIPA_CONFIG_FILE, contains lines such as the following:

```
# comment
D1.D2.D3.D4/MASK POLICY S1.S2.S3.S4 [T1.T2.T3.T4 [...]]
.INADDR_ANY P1-P2 POLICY S1.S2.S3.S4 [T1.T2.T3.T4 [...]]
.INADDR_ANY P POLICY S1.S2.S3.S4 [T1.T2.T3.T4 [...]]
```

`D1.D2.D3.D4/MASK` specifies a range of destination addresses and the number of bits set in the subnet mask (MASK). As soon as a socket is opened and connected to these destination addresses and the application does not do an explicit bind to a source address, Source VIPA does a bind to one of the source addresses specified (S, T, [...]). It uses the policy that is selected in the configuration file to distribute the source addresses. See “Policies” on page 270 for available load distribution policies. Instead of IP addresses in dotted notation, host names can also be used and are resolved using DNS.

You can use IPv6 or IPv4 IP addresses, but not both within a single rule in the configuration file. The following is an example of an IPv6 configuration file with a random policy:

```
# IPv6
2221:11c3:0123:d9d8:05d5:5a44:724c:783b/64 random ed27:120:da42:: 1112::33cc
```

`.INADDR_ANY P1-P2 POLICY S1.S2.S3.S4` or `.INADDR_ANY P POLICY S1.S2.S3.S4` causes bind calls with `.INADDR_ANY` as a local address to be intercepted if the port

the socket is bound to is between P1 and P2 (inclusive). In this case, `.INADDR_ANY` is replaced by one of the source addresses specified (S, T, [...]), which can be 0.0.0.0.

All `.INADDR_ANY` statements are read and evaluated in order of appearance. This method means that multiple `.INADDR_ANY` statements can be used to have bind calls intercepted for every port outside a certain range. This is useful, for example, for `rlogin`, which uses the `bind` command to bind to a local port, but with `.INADDR_ANY` as a source address to use automatic source address selection. See "Policies" for available load distribution policies.

The default behavior for all ports is that the kind of bind calls is not modified.

Policies

With Source VIPA Extensions, you provide a range of dummy source addresses for replacing the source addresses of a socket. The policy that is selected determines which method is used for selecting the source addresses from the range of dummy addresses.

onevipa
: Only the first address of all source addresses specified is used as source address.

random
: The source address that is used is selected randomly from all the specified source addresses.

lrr (local round robin)
: The source address that is used is selected in a round robin manner from all the specified source addresses. The round robin takes place on a per-invocation base: each process is assigned the source addresses round robin independently from other processes.

rr:ABC
: Stands for round robin and implements a global round robin over all Source VIPA instances that share a configuration file. All processes that use Source VIPA access an IPC shared memory segment to fulfil a global round robin algorithm. This shared memory segment is destroyed when the last running Source VIPA ends. However, if this process does not end gracefully (for example, is ended by a `kill` command), the shared memory segment (size: 4 bytes) can stay in the memory until it is removed by `ipcrm`. The tool `ipcs` can be used to display all IPC resources and to get the key or id used for `ipcrm`. ABC are UNIX permissions in octal writing (for example, 700) that are used to create the shared memory segment. Make this permission mask as restrictive as possible. A process that has access to this mask can cause an imbalance of the round robin distribution in the worst case.

lc
: Attempts to balance the number of connections per source address. This policy always associates the socket with the VIPA that is least in use. If the policy cannot be parsed correctly, the policy is set to round robin per default.

Enabling an application

The command:

```
src_vipa.sh <application and parameters>
```

enables the Source VIPA function for the application. The configuration file is read when the application is started. It is also possible to change the starter script and run multiple applications with different Source VIPA settings in separate files. To do this, define and export a SRC_VIPA_CONFIG_FILE environment variable that points to the separate file before you start an application.

Note:

1. LD_PRELOAD security prevents `setuid` executable files to be run under Source VIPA; programs of this kind can be run only when the real UID is 0. The ping utility is usually installed with `setuid` permissions.
2. The maximum number of VIPAs per destination is 8.

Example of how to set up source VIPA

This is an example of how to set up source VIPA.

Figure 47 shows a configuration where two applications with VIPA `9.164.100.100` and `9.164.100.200` are to be set up for Source VIPA with a local round robin policy.

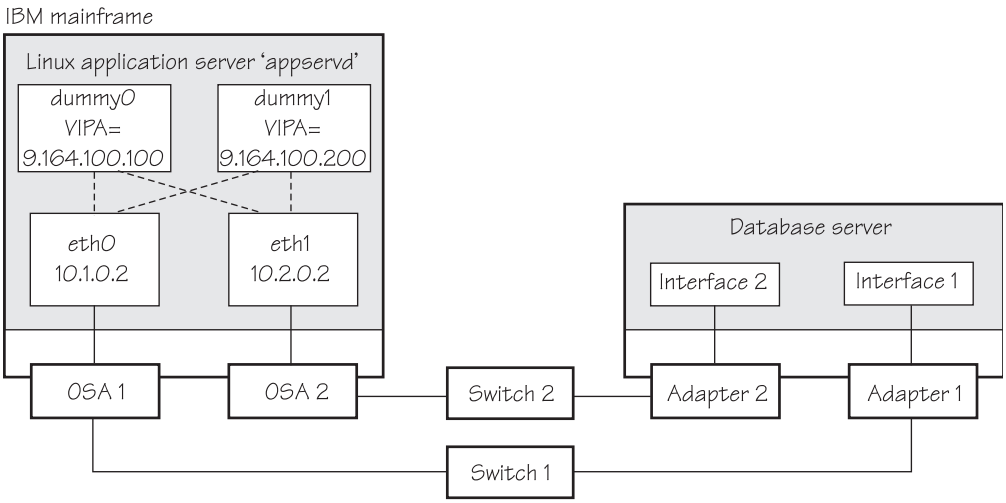

Figure 47. Example of using source VIPA

The required entry in the Source VIPA configuration file is:

```
9.0.0.0/8 lrr 9.164.100.100 9.164.100.200
```

Scenario: Virtual LAN (VLAN) support

VLAN technology works according to IEEE Standard 802.1Q by logically segmenting the network into different broadcast domains. Thus packets are switched only between ports that are designated for the same VLAN.

By containing traffic that originates on a particular LAN to other LANs within the same VLAN, switched virtual networks avoid wasting bandwidth. Wasted bandwidth is a drawback inherent in traditional bridged/switched networks where packets are often forwarded to LANs that do not require them.

The qeth device driver for OSA-Express (QDIO) and HiperSockets supports priority tags as specified by IEEE Standard 802.1Q for both layer2 and layer3.

Introduction to VLANs

Use VLANs to increase traffic flow and reduce latency. With VLANs, you can organize your network by traffic patterns rather than by physical location.

In a conventional network topology, such as that shown in the following figure, devices communicate across LAN segments in different broadcast domains by using routers. Although routers add latency by delaying transmission of data while they are using more of the data packet to determine destinations, they are preferable to building a single broadcast domain. A single domain can easily be flooded with traffic.

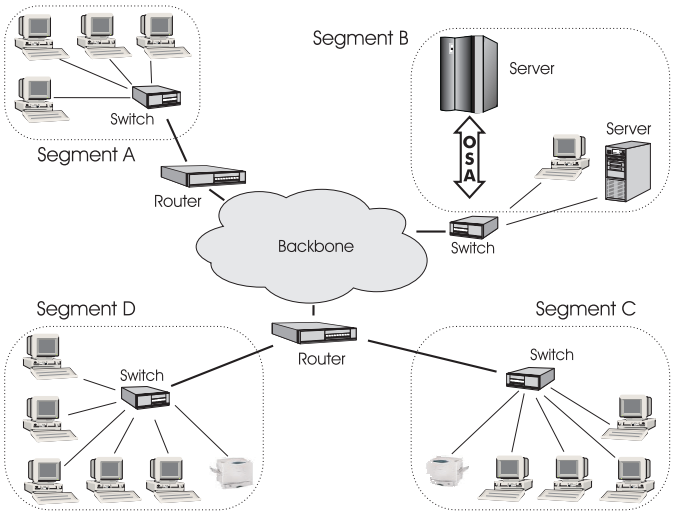

Figure 48. Conventional routed network

By organizing the network into VLANs by using Ethernet switches, distinct broadcast domains can be maintained without the latency that is introduced by multiple routers. As the following figure shows, a single router can provide the interfaces for all VLANs that appeared as separate LAN segments in the previous figure.

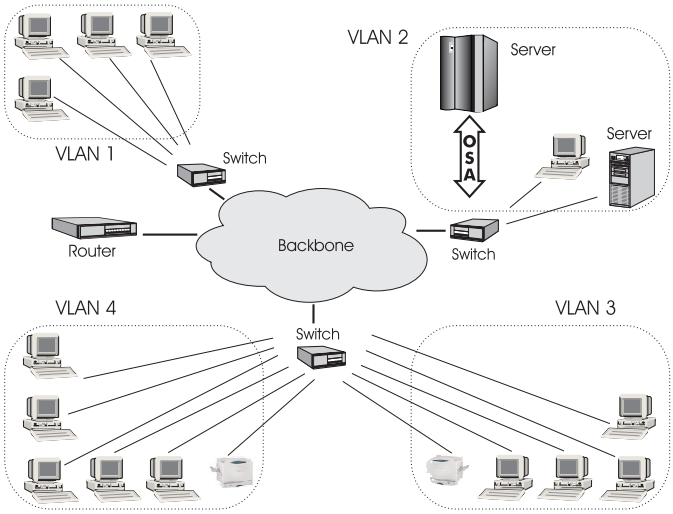

Figure 49. Switched VLAN network

The following figure shows how VLANs can be organized logically, according to traffic flow, rather than being restricted by physical location. If workstations 1-3 communicate mainly with the small server, VLANs can be used to organize only these devices in a single broadcast domain that keeps broadcast traffic within the group. This setup reduces traffic both inside the domain and outside, on the rest of the network.

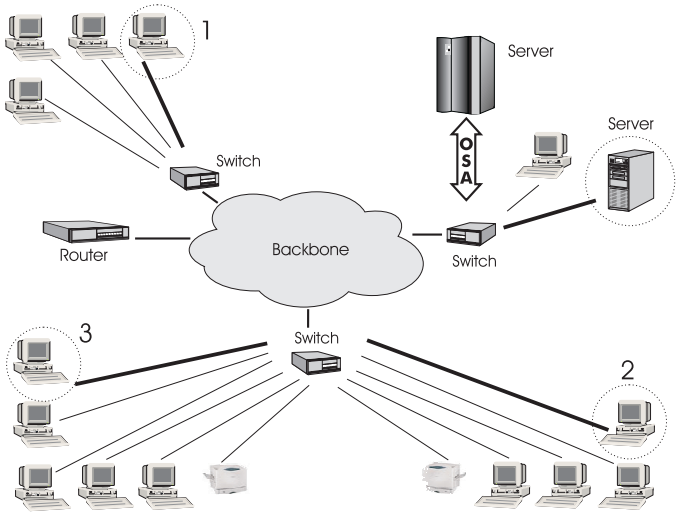

Figure 50. VLAN network organized for traffic flow

Configuring VLAN devices

Configure VLANs with the **ip link add** command. See the **ip-link** man page for details.

About this task

Information on the current VLAN configuration is available by listing the files in `/proc/net/vlan/*`

with **cat** or `more`. For example:

```
bash-2.04# cat /proc/net/vlan/config
VLAN Dev name    | VLAN ID
Name-Type: VLAN_NAME_TYPE_RAW_PLUS_VID_NO_PAD  bad_proto_recvd: 0
eth2.100       | 100  | eth2
eth2.200       | 200  | eth2
eth2.300       | 300  | eth2
bash-2.04# cat /proc/net/vlan/eth2.300
eth2.300  VID: 300       REORDER_HDR: 1  dev->priv_flags: 1
         total frames received:     10914061
          total bytes received:   1291041929
      Broadcast/Multicast Rcvd:            6

      total frames transmitted:     10471684
       total bytes transmitted:   4170258240
            total headroom inc:            0
           total encap on xmit:     10471684
Device: eth2
INGRESS priority mappings: 0:0  1:0  2:0  3:0  4:0  5:0  6:0 7:0
EGRESS  priority Mappings:
bash-2.04#
```

Example: Creating two VLANs

VLANs are allocated in an existing interface that represents a physical Ethernet LAN.

The following example creates two VLANs, one with ID 3 and one with ID 5.

```
ip addr add 9.164.160.23/19 dev eth1
ip link set dev eth1 up
ip link add dev eth1.3 link eth1 type vlan id 3
ip link add dev eth1.5 link eth1 type vlan id 5
```

The **ip link add** commands added interfaces "eth1.3" and "eth1.5", which you can then configure:

```
ip addr add  1.2.3.4/24    dev eth1.3
ip link set dev eth1.3 up
ip addr add  10.100.2.3/16 dev eth1.5
ip link set dev eth1.5 up
```

The traffic that flows out of eth1.3 is in the VLAN with ID=3. This traffic is not received by other stacks that listen to VLANs with ID=4.

The internal routing table ensures that every packet to 1.2.3.x goes out through eth1.3 and everything to 10.100.x.x through eth1.5. Traffic to 9.164.1xx.x flows through eth1 (without a VLAN tag).

To remove one of the VLAN interfaces:

```
ip link set dev eth1.3 down
ip link delete eth1.3 type vlan
```

Example: Creating a VLAN with five Linux instances

An example of how to set up a VLAN with five Linux instances.

The following example illustrates the definition and connectivity test for a VLAN comprising five different Linux systems (two LPARs, two z/VM guest virtual machines, and one x86 system), each connected to a physical Ethernet LAN through eth1:

- LINUX1: LPAR

```
ip link add dev eth1.5 link eth1 type vlan id 5
ip addr add 10.100.100.1/24 dev eth1.5
ip link set dev eth1.5 up
```

- LINUX2: LPAR

```
ip link add dev eth1.5 link eth1 type vlan id 5
ip addr add 10.100.100.2/24 dev eth1.5
ip link set dev eth1.5 up
```

- LINUX3: z/VM guest

```
ip link add dev eth1.5 link eth1 type vlan id 5
ip addr add 10.100.100.3/24 dev eth1.5
ip link set dev eth1.5 up
```

- LINUX4: z/VM guest

```
ip link add dev eth1.5 link eth1 type vlan id 5
ip addr add 10.100.100.4/24 dev eth1.5
ip link set dev eth1.5 up
```

- LINUX5: x86

```
ip link add dev eth1.5 link eth1 type vlan id 5
ip addr add 10.100.100.5/24 dev eth1.5
ip link set dev eth1.5 up
```

Test the connections:

```
ping 10.100.100.1                // Unicast-PING
...
ping 10.100.100.5
ping -I eth1.5 224.0.0.1         // Multicast-PING
ping -b 10.100.100.255           // Broadcast-PING
```

HiperSockets Network Concentrator

You can configure a HiperSockets Network Concentrator on a QETH device in layer 3 mode.

Before you begin: The instructions that are given apply to IPv4 only. The HiperSockets Network Concentrator connector settings are available in layer 3 mode only.

The HiperSockets Network Concentrator connects systems to an external LAN within one IP subnet that uses HiperSockets. HiperSockets Network Concentrator connected systems look as if they were directly connected to the LAN. This simplification helps to reduce the complexity of network topologies that result from server consolidation.

Without changing the network setup, you can use HiperSockets Network Concentrator to port systems:

- From the LAN into a z Systems Server environment
- From systems that are connected by a different HiperSockets Network Concentrator into a z Systems Server environment

Thus, HiperSockets Network Concentrator helps to simplify network configuration and administration.

Design

A connector Linux system forwards traffic between the external OSA interface and one or more internal HiperSockets interfaces. The forwarding is done via IPv4 forwarding for unicast traffic and via a particular bridging code (xcec_bridge) for multicast traffic.

A script named ip_watcher.pl observes all IP addresses registered in the HiperSockets network and configures them as proxy ARP entries (see “Configuring a device for proxy ARP” on page 261) on the OSA interfaces. The script also establishes routes for all internal systems to enable IP forwarding between the interfaces.

All unicast packets that cannot be delivered in the HiperSockets network are handed over to the connector by HiperSockets. The connector also receives all multicast packets to bridge them.

Setup

The setup principles for configuring the HiperSockets Network Concentrator are as follows:

leaf nodes
The leaf nodes do not require a special setup. To attach them to the HiperSockets network, their setup should be as if they were directly attached to the LAN. They do not have to be Linux systems.

connector systems
In the following, HiperSockets Network Concentrator IP refers to the subnet of the LAN that is extended into the HiperSockets net.

- If you want to support forwarding of all packet types, define the OSA interface for traffic into the LAN as a multicast router (see "Setting up a Linux router" on page 254) and set `operating_mode=full` in `/etc/sysconfig/hsnc`.
- All HiperSockets interfaces that are involved must be set up as connectors: set the route4 attributes of the corresponding devices to "primary_connector" or to "secondary_connector". Alternatively, you can add the OSA interface name to the start script as a parameter. This option results in HiperSockets Network Concentrator ignoring multicast packets, which are then not forwarded to the HiperSockets interfaces.
- IP forwarding must be enabled for the connector partition. Enable the forwarding either manually with the command

  ```
  sysctl -w net.ipv4.ip_forward=1
  ```

  Alternatively, you can enable IP forwarding in the `/etc/sysctl.conf` configuration file to activate IP forwarding for the connector partition automatically after booting. For HiperSockets Network Concentrator on SUSE Linux Enterprise Server 12 SP3 an additional config file exists: `/etc/sysconfig/hsnc`.
- The network routes for the HiperSockets interface must be removed. Anetwork route for the HiperSockets Network Concentrator IP subnet must be established through the OSA interface. To establish a route, assign the IP address 0.0.0.0 to the HiperSockets interface. At the same time, assign an address that is used in the HiperSockets Network Concentrator IP subnet to the OSA interface. These assignments set up the network routes correctly for HiperSockets Network Concentrator.
- To start HiperSockets Network Concentrator, issue:

  ```
  service hsnc start
  ```

  In `/etc/sysconfig/hsnc` you can specify an interface name as optional parameter. The interface name makes HiperSockets Network Concentrator use the specified interface to access the LAN. There is no multicast forwarding in that case.
- To stop HiperSockets Network Concentrator, issue

  ```
  service hsnc stop
  ```

Availability setups

If a connector system fails during operation, it can simply be restarted. If all the startup commands are run automatically, it will instantaneously be operational again after booting. Two common availability setups are mentioned here:

One connector partition and one monitoring system
: As soon as the monitoring system cannot reach the connector for a specific timeout (for example, 5 seconds), it restarts the connector. The connector itself monitors the monitoring system. If it detects (with a longer timeout than the monitoring system, for example, 15 seconds) a monitor system failure, it restarts the monitoring system.

Two connector systems monitoring each other
: In this setup, there is an active and a passive system. As soon as the passive system detects a failure of the active connector, it takes over operation. To take over operation, it must reset the other system to release all OSA resources for the multicast_router operation. The failed system can then be restarted manually or automatically, depending on the configuration. The passive backup HiperSockets interface can either switch into primary_connector mode during the failover, or it can be set up as secondary_connector. A secondary_connector takes over the connecting function, as soon as there is no active primary_connector. This setup has a faster failover time than the first one.

Hints

- The MTU of the OSA and HiperSockets link should be of the same size. Otherwise, multicast packets that do not fit in the link's MTU are discarded as there is no IP fragmentation for multicast bridging. Warnings are printed to `/var/log/messages` or a corresponding syslog destination.
- The script `ip_watcher.pl` prints error messages to the standard error descriptor of the process.
- `xcec-bridge` logs messages and errors to syslog. On SUSE Linux Enterprise Server 12 SP3, you can find these messages in `/var/log/messages`.
- Registering all internal addresses with the OSA adapter can take several seconds for each address.
- To shut down the HiperSockets Network Concentrator function, issue `killall ip_watcher.pl`. This script removes all routing table and Proxy ARP entries added during the use of HiperSockets Network Concentrator.

Note:

1. Broadcast bridging is active only on OSA or HiperSockets hardware that can handle broadcast traffic without causing a bridge loop. If you see the message "`Setting up broadcast echo filtering for ... failed`" in the message log when you set the qeth device online, broadcast bridging is not available.
2. Unicast packets are routed by the common Linux IPv4 forwarding mechanisms. As bridging and forwarding are done at the IP Level, the IEEE 802.1q VLAN and the IPv6 protocol are not supported.

Examples for setting up a network concentrator

An example of a network environment with a network concentrator.

Figure 51 on page 278 shows a network environment where a Linux instance C acts as a network concentrator that connects other operating system instances on a HiperSockets LAN to an external LAN.

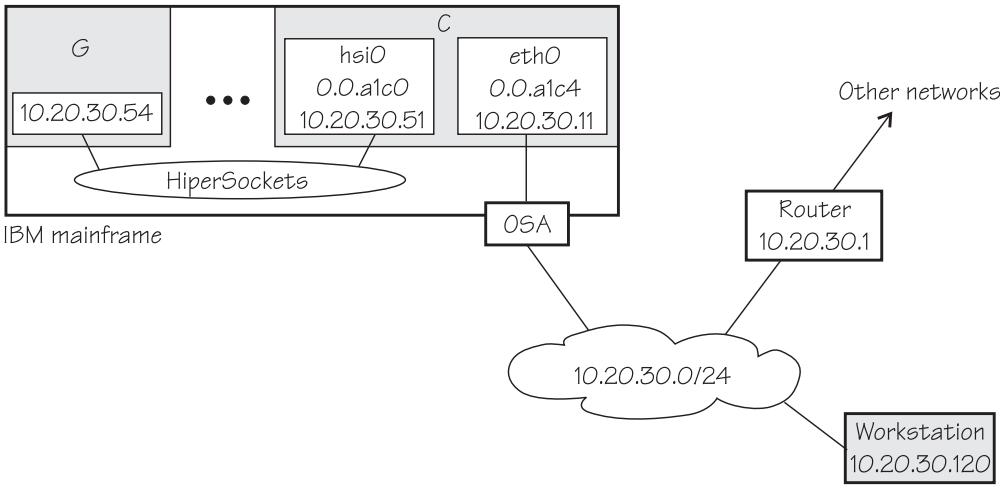

Figure 51. HiperSockets network concentrator setup

Setup for the network concentrator C:

The HiperSockets interface hsi0 (device bus-ID 0.0.a1c0) has IP address 10.20.30.51, and the netmask is 255.255.255.0. The default gateway is 10.20.30.1.

Issue:

```
# echo primary_connector > /sys/bus/ccwgroup/drivers/qeth/0.0.a1c0/route4
```

The OSA-Express CHPID in QDIO mode interface eth0 (with device bus-ID 0.0.a1c4) has IP address 10.20.30.11, and the netmask is 255.255.255.0. The default gateway is 10.20.30.1.

Issue:

```
# echo multicast_router > /sys/bus/ccwgroup/drivers/qeth/0.0.a1c4/route4
```

To enable IP forwarding issue:

```
# sysctl -w net.ipv4.ip_forward=1
```

Tip: See *SUSE Linux Enterprise Server 12 SP3 Administration Guide* for information about using configuration files to automatically enable IP forwarding when Linux boots.

To remove the network routes for the HiperSockets interface issue:

```
# ip route del 10.20.30/24
```

To start the HiperSockets network concentrator issue:

```
# service hsnc start
```

Setup for G:

No special setup required. The HiperSockets interface has IP address 10.20.30.54, and the netmask is 255.255.255.0. The default gateway is 10.20.30.1.

Setup for workstation:

No special setup required. The network interface IP address is 10.20.30.120, and the netmask is 255.255.255.0. The default gateway is 10.20.30.1.

Figure 52 shows the example of Figure 51 on page 278 with an additional mainframe. On the second mainframe a Linux instance D acts as a HiperSockets network concentrator.

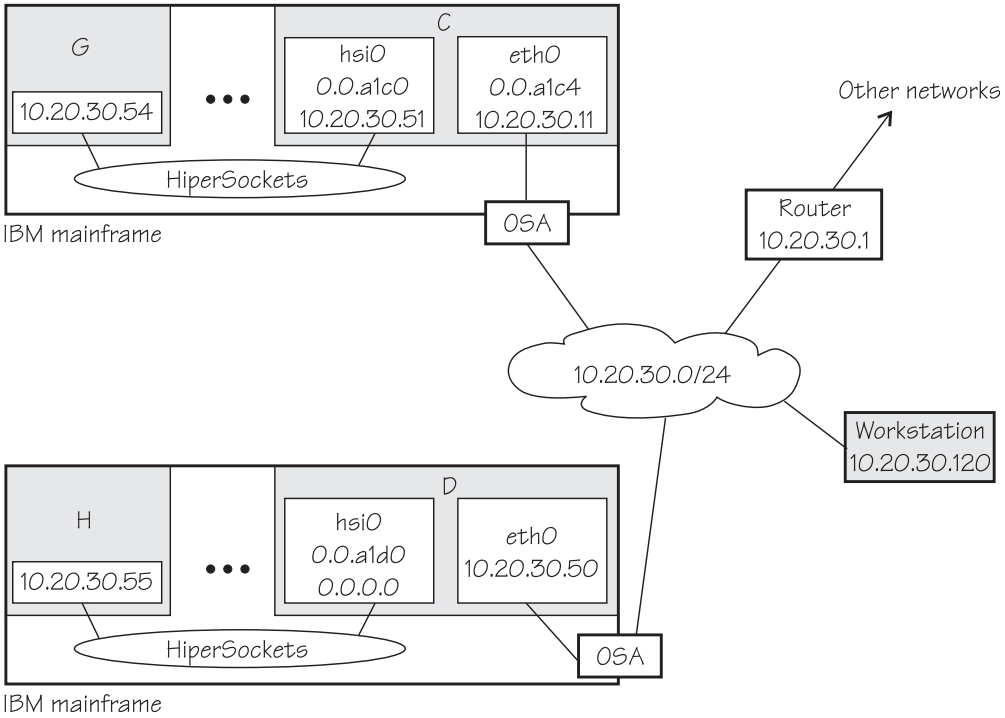

Figure 52. Expanded HiperSockets network concentrator setup

The configuration of C, G, and the workstation remain the same as for Figure 51 on page 278.

Setup for the network concentrator D:

The HiperSockets interface hsi0 has IP address 0.0.0.0.

Assuming that the device bus-ID of the HiperSockets interface is 0.0.a1d0, issue:

```
# echo primary_connector > /sys/bus/ccwgroup/drivers/qeth/0.0.a1d0/route4
```

The OSA-Express CHPID in QDIO mode interface eth0 has IP address 10.20.30.50, and the netmask is 255.255.255.0. The default gateway is 10.20.30.1.

D is not configured as a multicast router, it therefore only forwards unicast packets.

To enable IP forwarding issue:

```
# sysctl -w net.ipv4.ip_forward=1
```

Tip: See *SUSE Linux Enterprise Server 12 SP3 Administration Guide* for information about using configuration files to automatically enable IP forwarding when Linux boots.

To start the HiperSockets network concentrator issue:

```
# service hsnc start
```

Setup for H:

No special setup required. The HiperSockets interface has IP address 10.20.30.55, and the netmask is 255.255.255.0. The default gateway is 10.20.30.1.

Setting up for DHCP with IPv4

For connections through an OSA-Express adapter in QDIO mode, the OSA-Express adapter offloads ARP, MAC header, and MAC address handling.

For information about MAC headers, see "MAC headers in layer 3 mode" on page 227.

Because a HiperSockets connection does not go out on a physical network, there are no ARP, MAC headers, and MAC addresses for packets in a HiperSockets LAN. The resulting problems for DHCP are the same in both cases and the fixes for connections through the OSA-Express adapter also apply to HiperSockets.

Dynamic Host Configuration Protocol (DHCP) is a TCP/IP protocol that allows clients to obtain IP network configuration information (including an IP address) from a central DHCP server. The DHCP server controls whether the address it provides to a client is allocated permanently or is leased temporarily. DHCP specifications are described by RFC 2131"Dynamic Host Configuration Protocol" and RFC 2132 "DHCP options and BOOTP Vendor Extensions", which are available on the Internet at

`www.ietf.org`

Two types of DHCP environments have to be taken into account:

- DHCP through OSA-Express adapters in QDIO mode
- DHCP in a z/VM VSWITCH or guest LAN

For information about setting up DHCP for a SUSE Linux Enterprise Server 12 SP3 for z Systems instance in a z/VM guest LAN environment, see Redpaper *Linux on IBM eServer™ zSeries and S/390: TCP/IP Broadcast on z/VM Guest LAN*, REDP-3596 at

`www.ibm.com/redbooks`

Required options for using dhcpcd with layer3

You must configure the DHCP client program `dhcpcd` to use it on SUSE Linux Enterprise Server 12 SP3 with layer3.

- Run the DHCP client with an option that instructs the DHCP server to broadcast its response to the client.

  Because the OSA-Express adapter in QDIO mode forwards packets to Linux based on IP addresses, a DHCP client that requests an IP address cannot receive the response from the DHCP server without this option.
- Run the DHCP client with an option that specifies the client identifier string.

By default, the client uses the MAC address of the network interface. Hence, without this option, all Linux instances that share the OSA-Express adapter in QDIO mode would also have the same client identifier.

See the documentation for `dhcpcd` about selecting these options.

You need no special options for the DHCP server program, `dhcp`.

Setting up Linux as a LAN sniffer

You can set up a Linux instance to act as a LAN sniffer, for example, to make data on LAN traffic available to tools like **tcpdump** or Wireshark.

The LAN sniffer can be:

- A HiperSockets Network Traffic Analyzer for LAN traffic between LPARs
- A LAN sniffer for LAN traffic between z/VM guest virtual machines, for example, through a z/VM virtual switch (VSWITCH)

Setting up a HiperSockets network traffic analyzer

A HiperSockets network traffic analyzer (NTA) runs in an LPAR and monitors LAN traffic between LPARs.

Before you begin

- Your Linux instance must not be a z/VM guest.
- On the SE, the LPARs must be authorized for analyzing and being analyzed.

  Tip: Do any authorization changes before configuring the NTA device. Should you need to activate the NTA after SE authorization changes, set the qeth device offline, set the sniffer attribute to 1, and set the device online again.
- You need a traffic dumping tool such as **tcpdump**.

About this task

HiperSockets NTA is available to trace both layer 3 and layer 2 network traffic, but the analyzing device itself must be configured as a layer 3 device. The analyzing device is a dedicated NTA device and cannot be used as a regular network interface.

Procedure

Perform the following steps:

Linux setup:

1. Ensure that the qeth device driver module has been loaded.
2. Configure a HiperSockets interface dedicated to analyzing with the `layer2` sysfs attribute set to `0` and the `sniffer` sysfs attribute set to `1`.

   For example, assuming the HiperSockets interface is hsi0 with device bus-ID 0.0.a1c0:

   ```
   # znetconf -a a1c0 -o layer2=0 -o sniffer=1
   ```

The znetconf command also sets the device online. For more information about znetconf, see “znetconf - List and configure network devices” on page 679. The qeth device driver automatically sets the buffer_count attribute to 128 for the analyzing device.

3. Activate the device (no IP address is needed):

```
# ip link set hsi0 up
```

4. Switch the interface into promiscuous mode:

```
# tcpdump -i hsi0
```

Results

The device is now set up as a HiperSockets network traffic analyzer.

Hint: A HiperSockets network traffic analyzer with no free empty inbound buffers might have to drop packets. Dropped packets are reflected in the "dropped counter" of the HiperSockets network traffic analyzer interface and reported by **tcpdump**.

Example

```
# ip -s link show dev hsi0
...
    RX: bytes  packets  errors  dropped overrun mcast
    223242     6789     0       5       0       176
...
# tcpdump -i hsi0
tcpdump: verbose output suppressed, use -v or -vv for full protocol decode
listening on hsi1, link-type EN10MB (Ethernet), capture size 96 bytes
...
5 packets dropped by kernel
```

Setting up a z/VM guest LAN sniffer

You can set up a guest LAN sniffer on a virtual NIC that is coupled to a z/VM VSWITCH or guest LAN.

Before you begin

- You need class B authorization on z/VM.
- The Linux instance to be set up as a guest LAN sniffer must run as a guest of the same z/VM system as the guest LAN you want to investigate.

About this task

If a virtual switch connects to a VLAN that includes nodes outside the z/VM system, these external nodes are beyond the scope of the sniffer.

For information about VLANs and z/VM virtual switches, see *z/VM Connectivity*, SC24-6174.

Procedure

- Set up Linux.

  Ensure that the qeth device driver is compiled into the Linux kernel or that the qeth device driver is loaded as a module.

- Set up z/VM.

  Ensure that the z/VM guest virtual machine on which you want to set up the guest LAN sniffer is authorized for the switch or guest LAN and for promiscuous mode. For example, if your virtual NIC is coupled to a z/VM virtual switch, perform the following steps on your z/VM system:

  1. Check whether the z/VM guest virtual machine already has the requisite authorizations. Enter a CP command of this form:

     ```
     q vswitch <switchname> promisc
     ```

     where <*switchname*> is the name of the virtual switch. If the output lists the z/VM guest virtual machine as authorized for promiscuous mode, no further setup is needed.
  2. If the output from step 1 does not list the guest virtual machine, check if the guest is authorized for the virtual switch. Enter a CP command of this form:

     ```
     q vswitch <switchname> acc
     ```

     where <*switchname*> is the name of the virtual switch.

     If the output lists the z/VM guest virtual machine as authorized, you must temporarily revoke the authorization for the switch before you can grant authorization for promiscuous mode. Enter a CP command of this form:

     ```
     set vswitch <switchname> revoke <userid>
     ```

     where <*switchname*> is the name of the virtual switch and <*userid*> identifies the z/VM guest virtual machine.
  3. Authorize the Linux instance for the switch and for promiscuous mode. Enter a CP command of this form:

     ```
     set vswitch <switchname> grant <userid> promisc
     ```

     where <*switchname*> is the name of the virtual switch and <*userid*> identifies the z/VM guest virtual machine.

  For details about the CP commands that are used here and for commands you can use to check and assign authorizations for other types of guest LANs, see *z/VM CP Commands and Utilities Reference*, SC24-6175.

Chapter 15. OSA-Express SNMP subagent support

The OSA-Express Simple Network Management Protocol (SNMP) subagent (osasnmpd) supports management information bases (MIBs) for OSA-Express features.

The subagent supports OSA-Express features as shown in Table 36 on page 217.

This subagent capability through the OSA-Express features is also called *Direct SNMP* to distinguish it from another method of accessing OSA SNMP data through OSA/SF, a package for monitoring and managing OSA features that does not run on Linux.

To use the osasnmpd subagent, you need:

- An OSA-Express feature that runs in QDIO mode with the latest textual MIB file for the appropriate LIC level (recommended)
- The qeth device driver for OSA-Express (QDIO)
- The osasnmpd subagent from the osasnmpd package
- The net-snmp package delivered with SUSE Linux Enterprise Server 12 SP3

What you should know about osasnmpd

The osasnmpd subagent requires a master agent to be installed on a Linux system.

You get the master agent from either the net-snmp package. The subagent uses the Agent eXtensibility (AgentX) protocol to communicate with the master agent.

net-snmp is an open source project that is owned by the Open Source Development Network, Inc. (OSDN). For more information on net-snmp visit:

`net-snmp.sourceforge.net`

When the master agent (snmpd) is started on a Linux system, it binds to a port (default 161) and awaits requests from SNMP management software. Subagents can connect to the master agent to support MIBs of special interest (for example, OSA-Express MIB). When the osasnmpd subagent is started, it retrieves the MIB objects of the OSA-Express features currently present on the Linux system. It then registers with the master agent the object IDs (OIDs) for which it can provide information.

An OID is a unique sequence of dot-separated numbers (for example, .1.3.6.1.4.1.2) that represents a particular information. OIDs form a hierarchical structure. The longer the OID, that is the more numbers it is made up of, the more specific is the information that is represented by the OID. For example, .1.3.6.1.4.1.2 represents all IBM-related network information while ..1.3.6.1.4.1.2.6.188 represents all OSA-Express-related information.

A MIB corresponds to a number of OIDs. MIBs provide information on their OIDs including textual representations the OIDs. For example, the textual representation of .1.3.6.1.4.1.2 is .iso.org.dod.internet.private.enterprises.ibm.

The structure of the MIBs might change when updating the OSA-Express licensed internal code (LIC) to a newer level. If MIB changes are introduced by a new LIC

level, you must download the appropriate MIB file for the LIC level (see "Downloading the IBM OSA-Express MIB" on page 287). You do not need to update the subagent. Place the updated MIB file in a directory that is searched by the master agent.

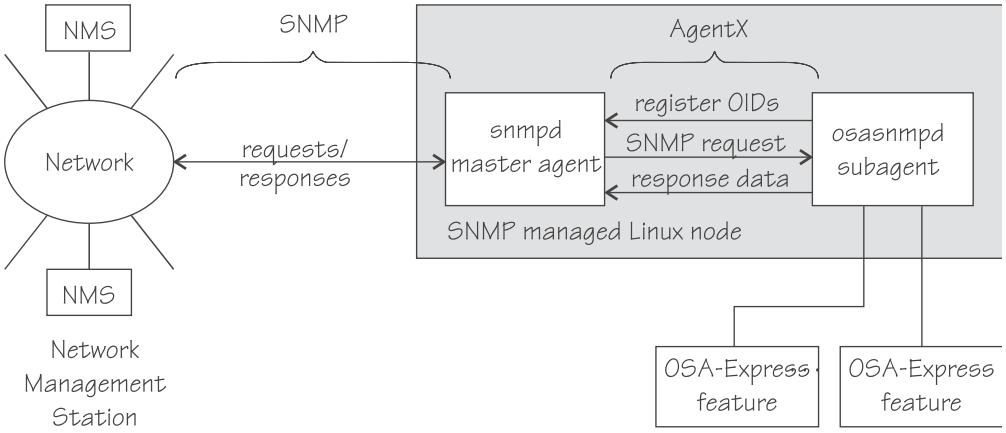

Figure 53. OSA-Express SNMP agent flow

Figure 53 illustrates the interaction between the snmpd master agent and the osasnmpd subagent.

Example: This example shows the processes that run after the snmpd master agent and the osasnmpd subagent are started. In the example, PID 687 is the SNMP master agent and PID 729 is the OSA-Express SNMP subagent process:

```
ps -ef | grep snmp

USER       PID
root       687     1  0 11:57 pts/1    00:00:00 snmpd
root       729   659  0 13:22 pts/1    00:00:00 osasnmpd
```

When the master agent receives an SNMP request for an OID that is registered by a subagent, the master agent uses the subagent to collect any requested information and to perform any requested operations. The subagent returns any requested information to the master agent. Finally, the master agent returns the information to the originator of the request.

Setting up osasnmpd

You can set up osasnmpd with YaST; this topic describes how to set up osasnmpd using the command line.

In YaST, go to **/etc/sysconfig Editor**, then select **Network –> SNMP –> OSA Express SNMP agent –> OSASNMPD_PARAMETERS**.

You must perform the following setup tasks if you want to use the osasnmpd subagent:

- "Downloading the IBM OSA-Express MIB" on page 287
- "Configuring access control" on page 287

Downloading the IBM OSA-Express MIB

Keep your MIB file up to date by downloading the latest version.

About this task

Perform the following steps to download the IBM OSA-Express MIB. The MIB file is valid only for hardware that supports the OSA-Express adapter.

Procedure

1. Go to www.ibm.com/servers/resourcelink

   A user ID and password are required. If you do not yet have one, you can apply for a user ID.
2. Sign in.
3. Select **Library** from the navigation area.
4. Under **Library shortcuts**, select **Open Systems Adapter (OSA) Library**.
5. Follow the link for **OSA-Express Direct SNMP MIB module**.
6. Select and download the MIB for your LIC level.
7. Rename the MIB file to the name specified in the MIBs definition line and use the extension `.txt`.

   Example: If the definition line in the MIB looks like this:

   ```
   ==>IBM-OSA-MIB DEFINITIONS ::= BEGIN
   ```

   Rename the MIB to `IBM-OSA-MIB.txt`.
8. Place the MIB into `/usr/share/snmp/mibs`.

   If you want to use a different directory, be sure to specify the directory in the `snmp.conf` configuration file (see step 10 on page 290).

Results

You can now make the OID information from the MIB file available to the master agent. You can then use textual OIDs instead of numeric OIDs when using master agent commands.

See also the FAQ (How do I add a MIB to the tools?) for the master agent package at

`net-snmp.sourceforge.net/FAQ.html`

Configuring access control

To start successfully, the subagent requires at least read access to the standard MIB-II on the local node.

About this task

During subagent startup or when network interfaces are added or removed, the subagent has to query OIDs from the interfaces group of the standard MIB-II.

Given here is an example of how to use the `snmpd.conf` and `snmp.conf` configuration files to assign access rights using the View-Based Access Control Mechanism (VACM). The following access rights are assigned on the local node:

- General read access for the scope of the standard MIB-II
- Write access for the scope of the OSA-Express MIB

- Public local read access for the scope of the interfaces MIB

The example is intended for illustration purposes only. Depending on the security requirements of your installation, you might need to define your access differently. See the snmpd man page for a more information about assigning access rights to snmpd.

Procedure

1. See the SUSE Linux Enterprise Server 12 SP3 documentation to find out where you need to place the `snmpd.conf` file. Some of the possible locations are:
   - `/etc`
   - `/etc/snmp`
2. Open `snmpd.conf` with your preferred text editor. There might be a sample in `usr/share/doc/packages/net-snmp/EXAMPLE.conf`
3. Find the security name section and include a line of this form to map a community name to a security name:

   ```
   com2sec <security-name> <source> <community-name>
   ```

   where:

   <security-name>
   is given access rights through further specifications within `snmpd.conf`.

   <source>
   is the IP-address or DNS-name of the accessing system, typically a Network Management Station.

   <community-name>
   is the community string used for basic SNMP password protection.

   Example:

   ```
   #       sec.name    source       community
   com2sec osasec      default      osacom
   com2sec pubsec      localhost    public
   ```

4. Find the group section.

   Use the security name to define a group with different versions of the master agent for which you want to grant access rights. Include a line of this form for each master agent version:

   ```
   group <group-name> <security-model> <security-name>
   ```

   where:

   <group-name>
   is a group name of your choice.

   <security-model>
   is the security model of the SNMP version.

   <security-name>
   is the same as in step 3.

   Example:

   ```
   #        groupName    securityModel    securityName
   group    osagroup     v1               osasec
   group    osagroup     v2c              osasec
   group    osagroup     usm              osasec
   group    osasnmpd     v2c              pubsec
   ```

Group “osasnmpd” with community “public” is required by osasnmpd to determine the number of network interfaces.

5. Find the view section and define your views. A view is a subset of all OIDs. Include lines of this form:

   ```
   view  <view-name>  <included|excluded>   <scope>
   ```

   where:

   <view-name>
   is a view name of your choice.

   <included|excluded>
   indicates whether the following scope is an inclusion or an exclusion statement.

   <scope>
   specifies a subtree in the OID tree.

   Example:

   ```
   #    name       incl/excl    subtree                 mask(optional)
   view allview    included     .1
   view osaview    included     .1.3.6.1.4.1.2
   view ifmibview  included     interfaces
   view ifmibview  included     system
   ```

   View “allview” encompasses all OIDs while “osaview” is limited to IBM OIDs. The numeric OID provided for the subtree is equivalent to the textual OID “.iso.org.dod.internet.private.enterprises.ibm” View “ifmibview” is required by osasnmpd to determine the number of network interfaces.

   Tip: Specifying the subtree with a numeric OID leads to better performance than using the corresponding textual OID.

6. Find the access section and define access rights. Include lines of this form:

   ```
   access <group-name> "" any noauth exact <read-view> <write-view> none
   ```

   where:

   <group-name>
   is the group you defined in step 4 on page 288.

   <read-view>
   is a view for which you want to assign read-only rights.

   <write-view>
   is a view for which you want to assign read-write rights.

   Example:

   ```
   #      group    context sec.model sec.level prefix read      write   notif
   access osagroup ""      any       noauth    exact  allview   osaview none
   access osasnmpd ""      v2c       noauth    exact  ifmibview none    none
   ```

   The access line of the example gives read access to the “allview” view and write access to the “osaview”. The second access line gives read access to the “ifmibview”.

7. Also include the following line to enable the AgentX support:

   ```
   master agentx
   ```

   AgentX support is compiled into the net-snmp master agent.

8. Save and close `snmpd.conf`. Example of an `snmpd.conf` file:

```
#       sec.name       source        community
com2sec osasec         default       osacom
com2sec pubsec         localhost     public
#       groupName      securityModel securityName
group   osagroup       v1            osasec
group   osagroup       v2c           osasec
group   osagroup       usm           osasec
group   osasnmpd       v2c           pubsec
#       name          incl/excl  subtree        mask(optional)
view    allview       included   .1
view    osaview       included   .1.3.6.1.4.1.2
view    ifmibview     included   interfaces
view    ifmibview     included      system
#       group          context sec.model sec.level prefix read       write    notif
access  osagroup       ""      any       noauth    exact  allview    osaview  none
access  osasnmpd       ""      v2c       noauth    exact  ifmibview  none     none
master  agentx
```

9. Open ~/.snmp/snmp.conf with your preferred text editor.

   Tip: See **man snmp.conf** for possible locations of snmp.conf.

10. Include a line of this form to specify the directory to be searched for MIBs:

    ```
    mibdirs +<mib-path>
    ```

    Example:

    ```
    mibdirs +/usr/share/snmp/mibs
    ```

11. Include a line of this form to make the OSA-Express MIB available to the master agent:

    ```
    mibs +<mib-name>
    ```

    where <*mib-name*> is the stem of the MIB file name you assigned in "Downloading the IBM OSA-Express MIB" on page 287.

    Example: mibs +IBM-OSA-MIB

12. Define defaults for the version and community to be used by the snmp commands. Add lines of this form:

    ```
    defVersion   <version>
    defCommunity <community-name>
    ```

    where <*version*> is the SNMP protocol version and <*community-name*> is the community you defined in step 3 on page 288.

    Example:

    ```
    defVersion   2c
    defCommunity osacom
    ```

    These default specifications simplify issuing master agent commands.

13. Save and close ~/.snmp/snmp.conf.

Working with the osasnmpd subagent

Working with the osasnmpd subagent includes starting it, checking the log file, issuing queries, and stopping the subagent.

Working with osasnmpd comprises the following tasks:

- "Starting the osasnmpd subagent" on page 291
- "Checking the log file" on page 292

- "Issuing queries" on page 292
- "Stopping osasnmpd" on page 293

Starting the osasnmpd subagent

Use a systemctl command or the **service start** command to start the osasnmpd subagent.

Procedure

1. In SUSE Linux Enterprise Server 12 SP3 you can start the osasnmpd subagent by:
   - Using the command

     ```
     # systemctl start snmpd.service
     ```

   - Using the start script:

     ```
     # rcsnmpd start
     ```

   The osasnmpd subagent, in turn, starts a daemon that is called osasnmpd.
2. Define osasnmpd parameters in YaST. You can specify the following parameters:

   -l or --logfile ***<logfile>***
   : specifies a file for logging all subagent messages and warnings, including stdout and stderr. If no path is specified, the log file is created in the current directory. The default log file is `/var/log/osasnmpd.log`.

   -L or --stderrlog
   : print messages and warnings to stdout or stderr.

   -A or --append
   : appends to an existing log file rather than replacing it.

   -f or --nofork
   : prevents forking from the calling shell.

   -P or --pidfile ***<pidfile>***
   : saves the process ID of the subagent in a file *<pidfile>*. If a path is not specified, the current directory is used.

   -x or --sockaddr ***<agentx_socket>***
   : specifies the socket to be used for the AgentX connection. The default socket is `/var/agentx/master`.

     The socket can either be a UNIX domain socket path, or the address of a network interface. If a network address of the form `inet-addr:port` is specified, the subagent uses the specified port. If a net address of the form `inet-addr` is specified, the subagent uses the default AgentX port, 705. The AgentX sockets of the snmpd daemon and osasnmpd must match.

Results

YaST creates a configuration file that is called `/etc/sysconfig/osasnmpd`, for example:

```
## Path: Network/SNMP/OSA Express SNMP agent
## Description: OSA Express SNMP agent parameters
## Type: string
## Default: ""
## ServiceRestart: snmpd
#
# OSA Express SNMP agent command-line parameters
#
# Enter the parameters you want to be passed on to the OSA Express SNMP
# agent.
#
# Example: OSASNMPD_PARAMETERS="-l /var/log/my_private_logfile"
#
OSASNMPD_PARAMETERS="-A"
```

Checking the log file

Warnings and messages are written to the log file of either the master agent or the OSA-Express subagent. It is good practice to check these files at regular intervals.

Example

This example assumes that the default subagent log file is used. The lines in the log file show the messages after a successful OSA-Express subagent initialization.

```
# cat /var/log/osasnmpd.log
IBM OSA-E NET-SNMP 5.1.x subagent version  1.3.0
Jul 14 09:28:41 registered Toplevel OID .1.3.6.1.2.1.10.7.2.
Jul 14 09:28:41 registered Toplevel OID .1.3.6.1.4.1.2.6.188.1.1.
Jul 14 09:28:41 registered Toplevel OID .1.3.6.1.4.1.2.6.188.1.3.
Jul 14 09:28:41 registered Toplevel OID .1.3.6.1.4.1.2.6.188.1.4.
Jul 14 09:28:41 registered Toplevel OID .1.3.6.1.4.1.2.6.188.1.8.
OSA-E microcode level is 611 for interface eth0
Initialization of OSA-E subagent successful...
```

Issuing queries

You can issue queries against your SNMP setup.

About this task

Examples of what SNMP queries might look like are given here. For more comprehensive information about the master agent commands see the **snmpcmd** man page.

The commands can use either numeric or textual OIDs. While the numeric OIDs might provide better performance, the textual OIDs are more meaningful and give a hint on which information is requested.

Examples

The query examples assume an interface, eth0, for which the CHPID is 6B. You can use the **lsqeth** command to find the mapping of interface names to CHPIDs.

- To list the ifIndex and interface description relation (on one line):

```
# snmpget -v 2c -c osacom localhost interfaces.ifTable.ifEntry.ifDescr.6
interfaces.ifTable.ifEntry.ifDescr.6 = eth0
```

  Using this GET request you can see that eth0 has the ifIndex 6 assigned.

- To find the CHPID numbers for your OSA devices:

```
# snmpwalk -OS -v 2c -c osacom localhost .1.3.6.1.4.1.2.6.188.1.1.1.1
IBM-OSA-MIB::ibmOSAExpChannelNumber.6 = Hex-STRING: 00 6B
IBM-OSA-MIB::ibmOSAExpChannelNumber.7 = Hex-STRING: 00 7A
IBM-OSA-MIB::ibmOSAExpChannelNumber.8 = Hex-STRING: 00 7D
```

  The first line of the command output, with index number 6, corresponds to CHPID 0x6B of the eth0 example. The example assumes that the community osacom is authorized as described in "Configuring access control" on page 287.

  If you provided defaults for the SNMP version and the community (see step 12 on page 290), you can omit the `-v` and `-c` options:

```
# snmpwalk -OS localhost .1.3.6.1.4.1.2.6.188.1.1.1.1
IBM-OSA-MIB::ibmOSAExpChannelNumber.6 = Hex-STRING: 00 6B
IBM-OSA-MIB::ibmOSAExpChannelNumber.7 = Hex-STRING: 00 7A
IBM-OSA-MIB::ibmOSAExpChannelNumber.8 = Hex-STRING: 00 7D
```

  You can obtain the same output by substituting the numeric OID .1.3.6.1.4.1.2.6.188.1.1.1.1 with its textual equivalent:

```
.iso.org.dod.internet.private.enterprises.ibm.ibmProd.ibmOSAMib.ibmOSAMibObjects.ibmOSAExpChannelTable.ibmOSAExpChannelEntry.ibmOSAExpChannelNumber
```

  You can shorten this unwieldy OID to the last element, ibmOsaExpChannelNumber:

```
# snmpwalk -OS localhost ibmOsaExpChannelNumber
IBM-OSA-MIB::ibmOSAExpChannelNumber.6 = Hex-STRING: 00 6B
IBM-OSA-MIB::ibmOSAExpChannelNumber.7 = Hex-STRING: 00 7A
IBM-OSA-MIB::ibmOSAExpChannelNumber.8 = Hex-STRING: 00 7D
```

- To find the port type for the interface with index number 6:

```
# snmpwalk -OS localhost .1.3.6.1.4.1.2.6.188.1.4.1.2.6
IBM-OSA-MIB::ibmOsaExpEthPortType.6 = INTEGER: fastEthernet(81)
```

  fastEthernet(81) corresponds to card type OSD_100.

  Using the short form of the textual OID:

```
# snmpwalk -OS localhost ibmOsaExpEthPortType.6
IBM-OSA-MIB::ibmOsaExpEthPortType.6 = INTEGER: fastEthernet(81)
```

  Specifying the index, 6 in the example, limits the output to the interface of interest.

Stopping osasnmpd

Use a systemctl command or the **`service stop`** command to stop the osasnmpd subagent.

Procedure

To stop both snmpd and the osasnmpd subagent:

- Issue the command:

```
# systemctl stop snmpd.service
```

- Alternatively, issue the command:

```
# rcsnmpd stop
```

Chapter 16. LAN channel station device driver

The LAN channel station device driver (LCS device driver) supports Open Systems Adapters (OSA) features in non-QDIO mode up to OSA-Express4S.

The LCS device driver supports OSA-Express features for the z Systems mainframes that are relevant to SUSE Linux Enterprise Server 12 SP3 as shown in Table 48.

Table 48. The LCS device driver supported OSA-Express features

Feature	z13 and z13s	zEC12 and zBC12	z196 and z114
OSA-Express4	1000Base-T Ethernet	1000Base-T Ethernet	Not supported
OSA-Express3	Not supported	1000Base-T Ethernet	1000Base-T Ethernet
OSA-Express2	Not supported	Not supported	1000Base-T Ethernet

The LCS device driver supports automatic detection of Ethernet connections. The LCS device driver can be used for Internet Protocol, version 4 (IPv4) only.

What you should know about LCS

Interface names are assigned to LCS group devices, which map to subchannels and their corresponding device numbers and device bus-IDs.

LCS group devices

The LCS device driver requires two I/O subchannels for each LCS interface, a read subchannel and a write subchannel. The corresponding bus IDs must be configured for control unit type 3088.

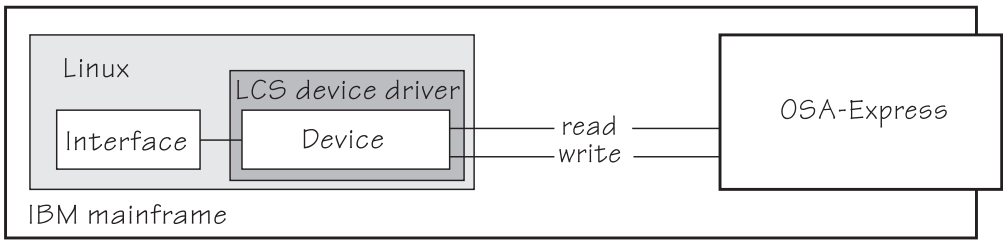

Figure 54. I/O subchannel interface

The device bus-IDs that correspond to the subchannel pair are grouped as one LCS group device. The following rules apply for the device bus-IDs:

read must be even.

write must be the device bus-ID of the read subchannel plus one.

LCS interface names

When an LCS group device is set online, the LCS device driver automatically assigns an Ethernet interface name to it.

The naming scheme uses the base name eth<*n*>, where <*n*> is an integer that uniquely identifies the device. When the first device for a base name is set online it is assigned 0, the second is assigned 1, the third 2, and so on. For example, the interface name of the first Ethernet feature that is set online is "eth0", and the second "eth1".

The LCS device driver shares the name space for Ethernet interfaces with the qeth device driver. Each driver uses the name with the lowest free identifier <*n*>, regardless of which device driver occupies the other names. For example, if at the time the first LCS Ethernet feature is set online, there is already one qeth Ethernet feature online, the qeth feature is named "eth0" and the LCS feature is named "eth1". See also "qeth interface names and device directories" on page 225.

Setting up the LCS device driver

There are no module parameters for the LCS device driver. SUSE Linux Enterprise Server 12 SP3 loads the device driver module for you when a device becomes available.

You can also load the module with the **modprobe** command:

```
# modprobe lcs
```

Working with LCS devices

Working with LCS devices includes tasks such as creating an LCS group device, specifying a timeout, or activating an interface.

Creating an LCS group device

Use the `group` attribute to create an LCS group device.

Before you begin

You must know the device bus-IDs that correspond to the read and write subchannel of your OSA card. The subchannel is defined in the IOCDS of your mainframe.

Procedure

To define an LCS group device, write the device bus-IDs of the subchannel pair to `/sys/bus/ccwgroup/drivers/lcs/group`. Issue a command of this form:

```
# echo <read_device_bus_id>,<write_device_bus_id> > /sys/bus/ccwgroup/drivers/lcs/group
```

Results

The lcs device driver uses the device bus-ID of the read subchannel to create a directory for a group device:

`/sys/bus/ccwgroup/drivers/lcs/<read_device_bus_id>`

This directory contains a number of attributes that determine the settings of the LCS group device. The following sections describe how to use these attributes to configure an LCS group device.

Example

Assuming that 0.0.d000 is the device bus-ID that corresponds to a read subchannel:

```
# echo 0.0.d000,0.0.d001 > /sys/bus/ccwgroup/drivers/lcs/group
```

This command results in the creation of the following directories in sysfs:

- `/sys/bus/ccwgroup/drivers/lcs/0.0.d000`
- `/sys/bus/ccwgroup/devices/0.0.d000`
- `/sys/devices/lcs/0.0.d000`

Note: When the device subchannels are added, device types 3088/08 and 3088/1f can be assigned to either the CTCM or the LCS device driver.

To check which devices are assigned to which device driver, issue the following commands:

```
# ls -l /sys/bus/ccw/drivers/ctcm
# ls -l /sys/bus/ccw/drivers/lcs
```

To change a faulty assignment, use the unbind and bind attributes of the device. For example, to change the assignment for device bus-IDs `0.0.2000` and `0.0.2001` issue the following commands:

```
# echo 0.0.2000 > /sys/bus/ccw/drivers/ctcm/unbind
# echo 0.0.2000 > /sys/bus/ccw/drivers/lcs/bind
# echo 0.0.2001 > /sys/bus/ccw/drivers/ctcm/unbind
# echo 0.0.2001 > /sys/bus/ccw/drivers/lcs/bind
```

Removing an LCS group device

Use the `ungroup` attribute to remove an LCS group device.

Before you begin

The device must be set offline before you can remove it.

Procedure

To remove an LCS group device, write 1 to the `ungroup` attribute. Issue a command of the form:

```
echo 1 > /sys/bus/ccwgroup/drivers/lcs/<device_bus_id>/ungroup
```

Example

This command removes device 0.0.d000:

```
echo 1 > /sys/bus/ccwgroup/drivers/lcs/0.0.d000/ungroup
```

Specifying a timeout for LCS LAN commands

Use the `lancmd_timeout` attribute to set a timeout for an LCS LAN command.

About this task

You can specify a timeout for the interval that the LCS device driver waits for a reply after issuing a LAN command to the LAN adapter. For older hardware, the replies can take a longer time. The default is 5 s.

Procedure

To set a timeout, issue a command of this form:

```
# echo <timeout> > /sys/bus/ccwgroup/drivers/lcs/<device_bus_id>/lancmd_timeout
```

where <*timeout*> is the timeout interval in seconds in the range 1 - 60.

Example

In this example, the timeout for a device 0.0.d000 is set to 10 s.

```
# echo 10 > /sys/bus/ccwgroup/drivers/lcs/0.0.d000/lancmd_timeout
```

Setting a device online or offline

Use the `online` device group attribute to set an LCS device online or offline.

About this task

Setting a device online associates it with an interface name. Setting the device offline preserves the interface name.

Read `/var/log/messages` or issue **dmesg** to determine the assigned interface name. You need to know the interface name to activate the network interface.

For each online interface, there is a symbolic link of the form `/sys/class/net/<interface_name>/device` in sysfs. You can confirm that you found the correct interface name by reading the link.

Procedure

To set an LCS group device online, set the online device group attribute to 1. To set an LCS group device offline, set the `online` device group attribute to `0`. Issue a command of this form:

```
# echo <flag> > /sys/bus/ccwgroup/drivers/lcs/<device_bus_id>/online
```

Example

To set an LCS device with bus ID 0.0.d000 online issue:

```
# echo 1 > /sys/bus/ccwgroup/drivers/lcs/0.0.d000/online
# dmesg
...
 lcs: LCS device eth0 without IPv6 support
 lcs: LCS device eth0 with Multicast support
...
```

The interface name that was assigned to the LCS group device in the example is eth0. To confirm that this name is the correct one for the group device issue:

```
# readlink /sys/class/net/eth0/device
../../../devices/lcs/0.0.d000
```

To set the device offline issue:

```
# echo 0 > /sys/bus/ccwgroup/drivers/lcs/0.0.d000/online
```

Activating and deactivating an interface

Use the **ip** command or equivalent to activate or deactivate an interface.

About this task

Before you can activate an interface, you must set the group device online and find out the interface name that is assigned by the LCS device driver. See "Setting a device online or offline" on page 298.

You activate or deactivate network devices with **ip** or an equivalent command. For details of the **ip** command, see the **ip** man page.

Examples

- This example activates an Ethernet interface:

```
# ip addr add 192.168.100.10/24 dev eth0
# ip link set dev eth0 up
```

- This example deactivates the Ethernet interface:

```
# ip link set dev eth0 down
```

- This example reactivates an interface that was already activated and subsequently deactivated:

```
# ip link set dev eth0 up
```

Recovering an LCS group device

You can use the recover attribute of an LCS group device to recover it in case of failure. For example, error messages in `/var/log/messages` might inform you of a malfunctioning device.

Procedure

Issue a command of the form:

```
# echo 1 > /sys/bus/ccwgroup/drivers/lcs/<device_bus_id>/recover
```

Example

```
# echo 1 > /sys/bus/ccwgroup/drivers/lcs/0.0.d100/recover
```

Chapter 17. CTCM device driver

The CTCM device driver provides Channel-to-Channel (CTC) connections and CTC-based Multi-Path Channel (MPC) connections. The CTCM device driver is required by Communications Server for Linux.

Deprecated connection type: CTC connections are deprecated. Do not use for new network setups.

This does not apply to MPC connections to VTAM®, which are not deprecated.

CTC connections are high-speed point-to-point connections between two mainframe operating system instances.

Communications Server for Linux uses MPC connections to connect SUSE Linux Enterprise Server 12 SP3 to VTAM on traditional mainframe operating systems.

Features

The CTCM device driver provides different kinds of CTC connections between mainframes, z/VM guests, and LPARs.

The CTCM device driver provides:

- MPC connections to VTAM on traditional mainframe operating systems.
- ESCON or FICON CTC connections (standard CTC and basic CTC) between mainframes in basic mode, LPARs or z/VM guests.

  For more information about FICON, see Redpaper *FICON CTC Implementation*, REDP-0158.
- Virtual CTCA connections between guests of the same z/VM system.
- CTC connections to other Linux instances or other mainframe operating systems.

What you should know about CTCM

The CTCM device driver assigns network interface names to CTCM group devices.

CTCM group devices

The CTCM device driver requires two I/O subchannels for each interface, a read subchannel and a write subchannel.

Figure 55 on page 302 illustrates the I/O subchannel interface. The device bus-IDs that correspond to the two subchannels must be configured for control unit type 3088.

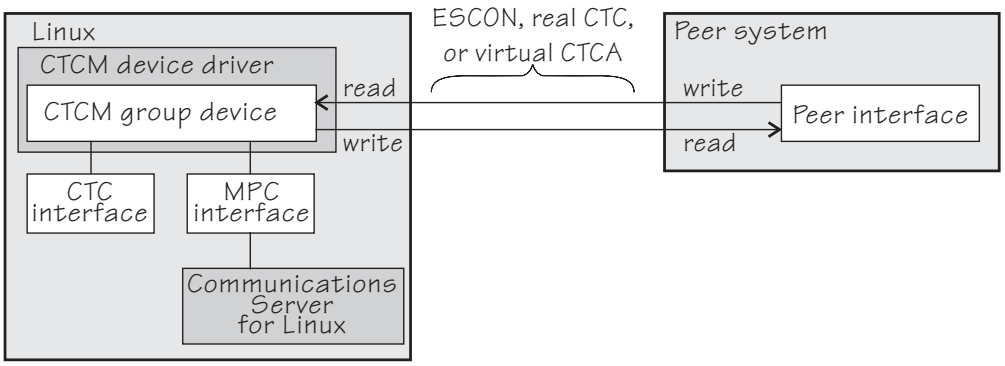

Figure 55. I/O subchannel interface

The device bus-IDs that correspond to the subchannel pair are grouped as one CTCM group device. There are no constraints on the device bus-IDs of read subchannel and write subchannel. In particular, it is possible to group non-consecutive device bus-IDs.

On the communication-peer operating system instance, read and write subchannels are reversed. That is, the write subchannel of the local interface is connected to the read subchannel of the remote interface and vice versa.

Depending on the protocol, the interfaces can be CTC interfaces or MPC interfaces. MPC interfaces are used by Communications Server for Linux and connect to peer interfaces that run under VTAM. For more information about Communications Server for Linux and on using MPC connections, go to www.ibm.com/software/network/commserver/linux.

Interface names assigned by the CTCM device driver

When a CTCM group device is set online, the CTCM device driver automatically assigns an interface name to it. The interface name depends on the protocol.

If the protocol is set to `4`, you get an MPC connection and the interface names are of the form `mpc<n>`.

If the protocol is set to `0`, `1`, or `3`, you get a CTC connection and the interface name is of the form `ctc<n>`.

<n> is an integer that identifies the device. When the first device is set online it is assigned 0, the second is assigned 1, the third 2, and so on. The devices are counted separately for CTC and MPC.

Network connections

If your CTC connection is to a router or z/VM TCP/IP service machine, you can connect CTC interfaces to an external network.

Figure 56 on page 303 shows a CTC interface that is connected to a network.

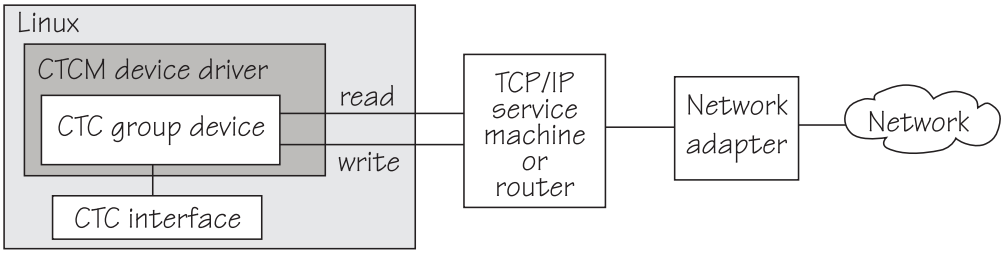

Figure 56. Network connection

Setting up the CTCM device driver

There are no module parameters for the CTCM device driver. SUSE Linux Enterprise Server 12 SP3 loads the device driver module for you when a device becomes available.

You can also load the module with the **modprobe** command:

```
# modprobe ctcm
```

Working with CTCM devices

When you work with CTCM devices you might create a CTCM group device, set the protocol, and activate an interface.

The following sections describe typical tasks that you need when you work with CTCM devices.

- "Creating a CTCM group device"
- "Removing a CTCM group device" on page 304
- "Displaying the channel type" on page 305
- "Setting the protocol" on page 305
- "Setting a device online or offline" on page 306
- "Setting the maximum buffer size" on page 307 (CTC only)
- "Activating and deactivating a CTC interface" on page 307 (CTC only)
- "Recovering a lost CTC connection" on page 309 (CTC only)

See the Communications Server for Linux documentation for information about configuring and activating MPC interfaces.

Creating a CTCM group device

Use the `group` attribute to create a CTCM group device.

Before you begin

You must know the device bus-IDs that correspond to the local read and write subchannel of your CTCM connection as defined in your IOCDS.

Procedure

To define a CTCM group device, write the device bus-IDs of the subchannel pair to `/sys/bus/ccwgroup/drivers/ctcm/group`. Issue a command of this form:

```
# echo <read_device_bus_id>,<write_device_bus_id> > /sys/bus/ccwgroup/drivers/ctcm/group
```

Results

The CTCM device driver uses the device bus-ID of the read subchannel to create a directory for a group device:

`/sys/bus/ccwgroup/drivers/ctcm/<read_device_bus_id>`

This directory contains a number of attributes that determine the settings of the CTCM group device.

Example

Assuming that device bus-ID 0.0.2000 corresponds to a read subchannel:

```
# echo 0.0.2000,0.0.2001 > /sys/bus/ccwgroup/drivers/ctcm/group
```

This command results in the creation of the following directories in sysfs:

- `/sys/bus/ccwgroup/drivers/ctcm/0.0.2000`
- `/sys/bus/ccwgroup/devices/0.0.2000`
- `/sys/devices/ctcm/0.0.2000`

Note: When the device subchannels are added, device types 3088/08 and 3088/1f can be assigned to either the CTCM or the LCS device driver.

To check which devices are assigned to which device driver, issue the following commands:

```
# ls -l /sys/bus/ccw/drivers/ctcm
# ls -l /sys/bus/ccw/drivers/lcs
```

To change a faulty assignment, use the unbind and bind attributes of the device. For example, to change the assignment for device bus-IDs `0.0.2000` and `0.0.2001` issue the following commands:

```
# echo 0.0.2000 > /sys/bus/ccw/drivers/lcs/unbind
# echo 0.0.2000 > /sys/bus/ccw/drivers/ctcm/bind
# echo 0.0.2001 > /sys/bus/ccw/drivers/lcs/unbind
# echo 0.0.2001 > /sys/bus/ccw/drivers/ctcm/bind
```

Removing a CTCM group device

Use the `ungroup` attribute to remove a CTCM group device.

Before you begin

The device must be set offline before you can remove it.

Procedure

To remove a CTCM group device, write 1 to the `ungroup` attribute. Issue a command of the form:

```
# echo 1 > /sys/bus/ccwgroup/drivers/ctcm/<device_bus_id>/ungroup
```

Example

This command removes device 0.0.2000:

```
echo 1 > /sys/bus/ccwgroup/drivers/ctcm/0.0.2000/ungroup
```

Displaying the channel type

Use the `type` attribute to display the channel type of a CTCM group device.

Procedure

Issue a command of this form to display the channel type of a CTCM group device:

```
# cat /sys/bus/ccwgroup/drivers/ctcm/<device_bus_id>/type
```

where <*device_bus_id*> is the device bus-ID that corresponds to the CTCM read channel. Possible values are: CTC/A, ESCON, and FICON.

Example

In this example, the channel type is displayed for a CTCM group device with device bus-ID 0.0.f000:

```
# cat /sys/bus/ccwgroup/drivers/ctcm/0.0.f000/type
ESCON
```

Setting the protocol

Use the `protocol` attribute to set the protocol.

Before you begin

The device must be offline while you set the protocol.

About this task

The type of interface depends on the protocol. Protocol `4` results in MPC interfaces with interface names `mpc`<*n*>. Protocols `0`, `1`, or `3` result in CTC interfaces with interface names of the form `ctc`<*n*>.

To choose a protocol, set the protocol attribute to one of the following values:

0 This protocol provides compatibility with peers other than z/OS, for example, a z/VM TCP service machine. This value is the default.

1 This protocol provides enhanced package checking for Linux peers.

3 This protocol provides for compatibility with z/OS peers.

4 This protocol provides for MPC connections to VTAM on traditional mainframe operating systems.

Procedure

Issue a command of this form:

```
# echo <value> > /sys/bus/ccwgroup/drivers/ctcm/<device_bus_id>/protocol
```

Example

In this example, the protocol is set for a CTCM group device 0.0.2000:

```
# echo 4 > /sys/bus/ccwgroup/drivers/ctcm/0.0.2000/protocol
```

Setting a device online or offline

Use the `online` device group attribute to set a CTCM device online or offline.

About this task

Setting a group device online associates it with an interface name. Setting the group device offline and back online with the same protocol preserves the association with the interface name. If you change the protocol before you set the group device back online, the interface name can change as described in "Interface names assigned by the CTCM device driver" on page 302.

You must know the interface name to access the CTCM group device. Read `/var/log/messages` or issue **dmesg** to determine the assigned interface name for the group device.

For each online interface, there is a symbolic link of the form `/sys/class/net/<interface_name>/device` in sysfs. You can confirm that you found the correct interface name by reading the link.

Procedure

To set a CTCM group device online, set the online device group attribute to `1`. To set a CTCM group device offline, set the online device group attribute to `0`. Issue a command of this form:

```
# echo <flag> > /sys/bus/ccwgroup/drivers/ctcm/<device_bus_id>/online
```

Example

To set a CTCM device with bus ID 0.0.2000 online issue:

```
# echo 1 > /sys/bus/ccwgroup/drivers/ctcm/0.0.2000/online
# dmesg | grep -F "ch-0.0.2000"
mpc0: read: ch-0.0.2000, write: ch-0.0.2001, proto: 4
```

The interface name that was assigned to the CTCM group device in the example is mpc0. To confirm that this name is the correct one for the group device issue:

```
# readlink /sys/class/net/mpc0/device
../../../0.0.2000
```

To set group device 0.0.2000 offline issue:

```
# echo 0 > /sys/bus/ccwgroup/drivers/ctcm/0.0.2000/online
```

Setting the maximum buffer size

Use the `buffer` device group attribute to set a maximum buffer size for a CTCM group device.

Before you begin

- Set the maximum buffer size for CTC interfaces only. MPC interfaces automatically use the highest possible maximum buffer size.
- The device must be online when you set the buffer size.

About this task

You can set the maximum buffer size for a CTC interface. The permissible range of values depends on the MTU settings. It must be in the range *<minimum MTU + header size>* to *<maximum MTU + header size>*. The header space is typically 8 byte. The default for the maximum buffer size is 32768 byte (32 KB).

Changing the buffer size is accompanied by an MTU size change to the value *<buffer size - header size>*.

Procedure

To set the maximum buffer size, issue a command of this form:

```
# echo <value> > /sys/bus/ccwgroup/drivers/ctcm/<device_bus_id>/buffer
```

where *<value>* is the number of bytes you want to set. If you specify a value outside the valid range, the command is ignored.

Example

In this example, the maximum buffer size of a CTCM group device 0.0.f000 is set to 16384 byte.

```
# echo 16384 > /sys/bus/ccwgroup/drivers/ctcm/0.0.f000/buffer
```

Activating and deactivating a CTC interface

Use **`ip`** or an equivalent command to activate or deactivate an interface.

Before you begin

- Activate and deactivate a CTC interface only. For information about activating MPC interfaces, see the Communications Server for Linux documentation.
- You must know the interface name. See "Setting a device online or offline" on page 306.

About this task

Syntax for setting an IP address for a CTC interface with the ip command

```
►►──ip address── add <ip_address>── dev <interface>──────────────────────►
►──┬──────────────────────────────┬──────────────────────────────────────►◄
  └─ peer <peer_ip_address──────┘
```

Syntax for activating a CTC interface with the ip command

```
                                   ┌─ mtu 32760──────────────┐
►►──ip link set── dev <interface>── up──┼──────────────────────────┼──────►◄
                                   └─ mtu <max_transfer_unit>─┘
```

Where:

<interface>
is the interface name that was assigned when the CTCM group device was set online.

<ip_address>
is the IP address that you want to assign to the interface.

<peer_ip_address>
is the IP address of the remote side.

<max_transfer_unit>
is the size of the largest IP packet that might be transmitted. Be sure to use the same MTU size on both sides of the connection. The MTU must be in the range of 576 byte to 65,536 byte (64 KB).

Syntax for deactivating a CTC interface with the ip command

```
►►──ip link set── dev <interface>── down──────────────────────────────►◄
```

Where:

<interface>
is the interface name that was assigned when the CTCM group device was set online.

Procedure

- Use **ip** or an equivalent command to activate the interface.
- To deactivate an interface, issue a command of this form:

```
# ip link set dev <interface> down
```

Examples

- This example activates a CTC interface ctc0 with an IP address 10.0.51.3 for a peer with address 10.0.50.1 and an MTU of 32760.

```
# ip addr add 10.0.51.3 dev ctc0 peer 10.0.50.1
# ip link set dev ctc0 up mtu 32760
```

- This example deactivates ctc0:

```
# ip link set dev ctc0 down
```

Recovering a lost CTC connection

If one side of a CTC connection crashes, you cannot simply reconnect after a reboot. You must also deactivate the interface of the peer of the crashed side.

Before you begin

These instructions apply to CTC interfaces only.

Procedure

Proceed as follows to recover a lost CTC connection:

1. Reboot the crashed side.
2. Deactivate the interface on the peer. See "Activating and deactivating a CTC interface" on page 307.
3. Activate the interface on the crashed side and on the peer. For details, see "Activating and deactivating a CTC interface" on page 307.

   If the connection is between a Linux instance and a non-Linux instance, activate the interface on the Linux instance first. Otherwise, you can activate the interfaces in any order.

Results

If the CTC connection is uncoupled, you must couple it again and reconfigure the interface of both peers with the **ip** command. See "Activating and deactivating a CTC interface" on page 307.

Scenarios

Typical use cases of CTC connections include connecting to a peer in a different LPAR and connecting Linux instances that run as z/VM guests to each other.

- "Connecting to a peer in a different LPAR"
- "Connecting Linux on z/VM to another guest of the same z/VM system" on page 311

Connecting to a peer in a different LPAR

A Linux instance and a peer both run in LPAR mode on the same or on different mainframes. They are to be connected with a CTC FICON or CTC ESCON network interface.

Assumptions:

- Locally, the read and write channels are configured for type 3088 and use device bus-IDs 0.0.f008 and 0.0.f009.
- IP address 10.0.50.4 is to be used locally and 10.0.50.5 for the peer.

Figure 57 illustrates a CTC setup with a peer in a different LPAR.

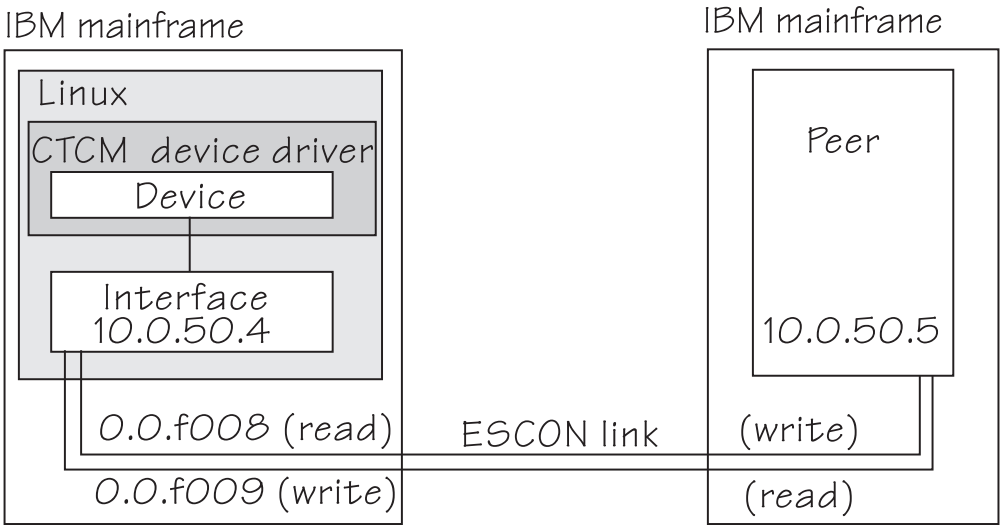

Figure 57. CTC scenario with peer in a different LPAR

Procedure

1. Create a CTCM group device. Issue:

```
# echo 0.0.f008,0.0.f009 > /sys/bus/ccwgroup/drivers/ctcm/group
```

2. Confirm that the device uses CTC FICON or CTC ESCON:

```
# cat /sys/bus/ccwgroup/drivers/ctcm/0.0.f008/type
ESCON
```

   In this example, ESCON is used. You would proceed the same for FICON.

3. Select a protocol. The choice depends on the peer.

If the peer is ...	Choose ...
Linux	1
z/OS or OS/390®	3
Any other operating system	0

   Assuming that the peer is Linux:

```
# echo 1 > /sys/bus/ccwgroup/drivers/ctcm/0.0.f008/protocol
```

4. Set the CTCM group device online and find out the assigned interface name:

```
# echo 1 > /sys/bus/ccwgroup/drivers/ctcm/0.0.f008/online
# ls /sys/devices/ctcm/0.0.f008/net/
ctc0
```

In the example, the interface name is ctc0.

5. Assure that the peer interface is configured.
6. Activate the interface locally and on the peer. If you are connecting two Linux instances, either instance can be activated first. If the peer is not Linux, activate the interface on Linux first. To activate the local interface:

```
# ip addr add 10.0.50.4 dev ctc0 peer 10.0.50.5
# ip link set dev ctc0 up
```

Connecting Linux on z/VM to another guest of the same z/VM system

A virtual CTCA connection is to be set up between an instance of Linux on z/VM and another guest of the same z/VM system.

Assumptions:

- The guest ID of the peer is "guestp".
- A separate subnet was obtained from the TCP/IP network administrator. The Linux instance uses IP address 10.0.100.100 and the peer uses IP address 10.0.100.101.

Figure 58 illustrates a CTC setup with a peer in the same z/VM.

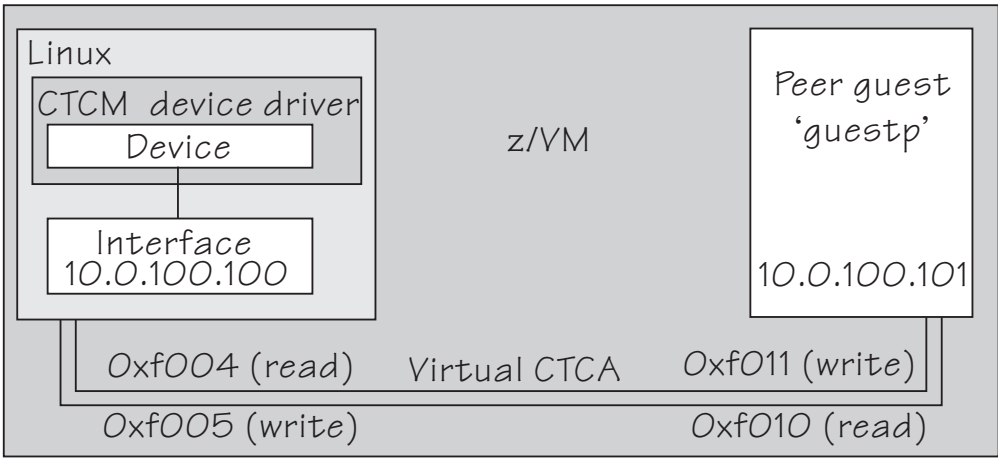

Figure 58. CTC scenario with peer in the same z/VM

Procedure

1. Define two virtual channels to your user ID. The channels can be defined in the z/VM user directory with directory control `SPECIAL` statements, for example:

   ```
   special f004 ctca
   special f005 ctca
   ```

   Alternatively, you can use the CP commands:

   ```
   define ctca as f004
   define ctca as f005
   ```

2. Assure that the peer interface is configured.
3. Connect the virtual channels. Assuming that the read channel on the peer corresponds to device number 0xf010 and the write channel to 0xf011 issue:

```
couple f004 to guestp f011
couple f005 to guestp f010
```

Be sure that you couple the read channel to the peers write channel and vice versa.

4. From your booted Linux instance, create a CTCM group device. Issue:

```
# echo 0.0.f004,0.0.f005 > /sys/bus/ccwgroup/drivers/ctcm/group
```

5. Confirm that the group device is a virtual CTCA device:

```
# cat /sys/bus/ccwgroup/drivers/ctcm/0.0.f004/type
CTC/A
```

6. Select a protocol. The choice depends on the peer.

If the peer is ...	Choose ...
Linux	1
z/OS or OS/390	3
Any other operating system	0

Assuming that the peer is Linux:

```
# echo 1 > /sys/bus/ccwgroup/drivers/ctcm/0.0.f004/protocol
```

7. Set the CTCM group device online and find out the assigned interface name:

```
# echo 1 > /sys/bus/ccwgroup/drivers/ctcm/0.0.f004/online
# ls /sys/devices/ctcm/0.0.f004/net/
ctc1
```

In the example, the interface name is ctc1.

8. Activate the interface locally and on the peer. If you are connecting two Linux instances, either can be activated first. If the peer is not Linux, activate the local interface first. To activate the local interface:

```
# ip addr add 10.0.100.100 dev ctc1 peer 10.0.100.101
# ip link set dev ctc1 up
```

Be sure that the MTU on both sides of the connection is the same. If necessary, change the default MTU (see "Activating and deactivating a CTC interface" on page 307).

9. Ensure that the buffer size on both sides of the connection is the same. For the Linux side, see "Setting the maximum buffer size" on page 307 if the peer is not Linux, see the operating system documentation of the peer.

Chapter 18. NETIUCV device driver

The Inter-User Communication Vehicle (IUCV) is a z/VM communication facility that enables a program running in one z/VM guest to communicate with another z/VM guest, or with a control program, or even with itself.

Deprecated device driver

NETIUCV connections are only supported for compatibility with earlier versions. Do not use for new network setups.

The NETIUCV device driver is a network device driver, that uses IUCV to connect instances of Linux on z/VM, or to connect an instance of Linux on z/VM to another z/VM guest such as a TCP/IP service machine.

Features

The NETIUCV device driver supports the following functions:

- Multiple output paths from Linux on z/VM
- Multiple input paths to Linux on z/VM
- Simultaneous transmission and reception of multiple messages on the same or different paths
- Network connections via a TCP/IP service machine gateway
- Internet Protocol, version 4 (IPv4) only

What you should know about IUCV

The NETIUCV device driver assigns IUCV interface names and creates IUCV devices in sysfs.

IUCV direct and routed connections

The NETIUCV device driver uses TCP/IP over z/VM virtual communications.

The communication peer is a guest of the same z/VM or the z/VM control program. No subchannels are involved, see Figure 59.

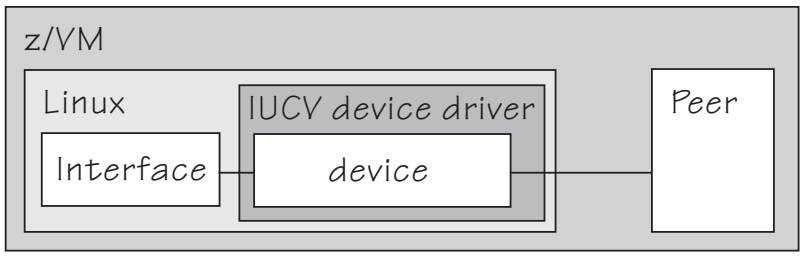

Figure 59. Direct IUCV connection

If your IUCV connection is to a router, the peer can be remote and connected through an external network, see Figure 60 on page 314.

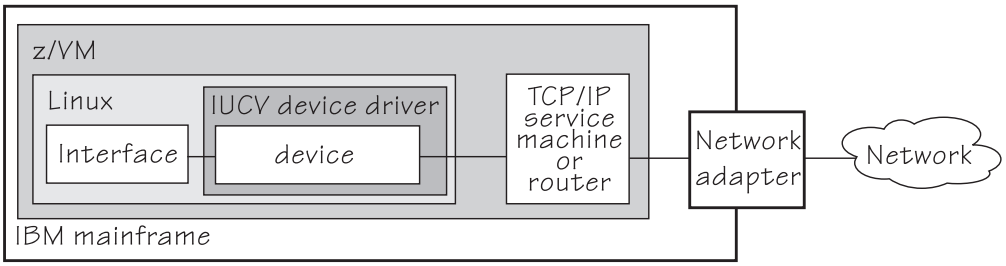

Figure 60. Routed IUCV connection

The standard definitions in the z/VM TCP/IP configuration files apply.

For more information of the z/VM TCP/IP configuration see: *z/VM TCP/IP Planning and Customization*, SC24-6238.

IUCV interfaces and devices

The NETIUCV device driver assigns names to its devices.

The NETIUCV device driver uses the base name iucv<*n*> for its interfaces. When the first IUCV interface is created (see "Creating an IUCV device" on page 315) it is assigned the name iucv0, the second is assigned iucv1, the third iucv2, and so on.

For each interface, a corresponding IUCV device is created in sysfs at `/sys/bus/iucv/devices/netiucv<n>` where <*n*> is the same index number that also identifies the corresponding interface.

For example, interface iucv0 corresponds to device name netiucv0, iucv1 corresponds to netiucv1, iucv2 corresponds to netiucv2, and so on.

Setting up the NETIUCV device driver

There are no module parameters for the NETIUCV device driver, but you need to load the netiucv module. You also need to enable a z/VM guest virtual machine for IUCV.

Loading the IUCV modules

The NETIUCV device driver has been compiled as a separate module that you need to load before you can work with IUCV devices. Use **modprobe** to load the module to ensure that any other required modules are also loaded.

```
# modprobe netiucv
```

Enabling your z/VM guest for IUCV

To enable your z/VM guest for IUCV add the following statements to your z/VM USER DIRECT entry:

```
IUCV ALLOW
IUCV ANY
```

Working with IUCV devices

Typical tasks that you need to perform when working with IUCV devices include creating an IUCV device, setting the mazimum buffer size, and activating an interface.

About this task

This section describes typical tasks that you need to perform when working with IUCV devices.

- "Creating an IUCV device"
- "Changing the peer" on page 316
- "Setting the maximum buffer size" on page 316
- "Activating an interface" on page 317
- "Deactivating and removing an interface" on page 318

Creating an IUCV device

Use the `connection` attribute to create an IUCV device.

About this task

To define an IUCV device write the user ID of the peer z/VM guest to `/sys/bus/iucv/drivers/netiucv/connection`.

Procedure

Issue a command of this form:

```
# echo <peer_id>.<path_name> > /sys/bus/iucv/drivers/netiucv/connection
```

Where:

<peer_id>
: is the user ID of the z/VM guest you want to connect to.

.<path_name>
: identifies an individual path to a peer z/VM guest. This specification is required for setting up multiple paths to the same peer z/VM guest. For setting up a single path to a particular peer z/VM guest, this specification is optional and can be omitted. The path name can be up to 16 characters long. The peer must use the same path name when setting up the peer interface.

The NETIUCV device driver interprets the specification as uppercase.

Results

An interface iucv<*n*> is created and the following corresponding sysfs directories:

- `/sys/bus/iucv/devices/netiucv<n>`
- `/sys/devices/iucv/netiucv<n>`
- `/sys/class/net/iucv<n>`

<*n*> is an index number that identifies an individual IUCV device and its corresponding interface. You can use the attributes of the sysfs entry to configure the device.

To find the index numbers that corresponds to a given user ID, scan the name attributes of all NETIUCV devices. Issue a command of this form:

```
# grep <peer_id> /sys/bus/iucv/drivers/netiucv/*/user
```

Example

To create an IUCV device to connect to a z/VM guest with a guest user ID "LINUXP" issue:

```
# echo linuxp > /sys/bus/iucv/drivers/netiucv/connection
```

To find the device and interface that connect to "LINUXP" issue:

```
# grep -Hxi linuxp /sys/bus/iucv/devices/*/user
/sys/bus/iucv/devices/netiucv0/user:LINUXP
```

In the sample output, the device is netiucv0 and, therefore, the interface is iucv0.

Changing the peer

You can change the z/VM guest that an interface connects to.

Before you begin

The interface must not be active when changing the name of the peer z/VM guest.

About this task

To change the peer z/VM guest, issue a command of this form:

```
# echo <peer_ID> > /sys/bus/iucv/drivers/netiucv/netiucv<n>/user
```

where:

<peer_ID>
: is the z/VM guest ID of the new communication peer. The value must be a valid guest ID. The NETIUCV device driver interprets the ID as uppercase.

<n>
: is an index that identifies the IUCV device and the corresponding interface.

Example

In this example, "LINUX22" is set as the new peer z/VM guest.

```
# echo linux22 > /sys/bus/iucv/drivers/netiucv/netiucv0/user
```

Setting the maximum buffer size

Use the `buffer` attribute to set the maximum buffer size of an IUCV device.

About this task

The upper limit for the maximum buffer size is 32768 bytes (32 KB). The lower limit is 580 bytes in general and in addition, if the interface is up and running *<current MTU + header size>*. The header space is typically 4 bytes.

Changing the buffer size is accompanied by an mtu size change to the value *<buffer size - header size>*.

To set the maximum buffer size issue a command of this form:

```
# echo <value> > /sys/bus/iucv/drivers/netiucv/netiucv<n>/buffer
```

where:

<value>
is the number of bytes you want to set. If you specify a value outside the valid range, the command is ignored.

<n>
is an index that identifies the IUCV device and the corresponding interface.

Note: If IUCV performance deteriorates and IUCV issues out-of-memory messages on the console, consider using a buffer size less than 4K.

Example

In this example, the maximum buffer size of an IUCV device netiucv0 is set to 16384 byte.

```
# echo 16384 > /sys/bus/iucv/drivers/netiucv/netiucv0/buffer
```

Activating an interface

Use **ip** or an equivalent command to activate an interface.

About this task

ip syntax for setting an IP address for an IUCV connection

```
►►──ip address── add <ip_address>── dev <interface>──────────────────────►
►──┬──────────────────────────────┬──────────────────────────────────────►◄
  └─ peer <peer_ip_address──────┘
```

ip syntax for activating an IUCV interface

```
                                   ┌─ mtu 9216──────────────┐
►►──ip link set── dev <interface>── up──┼──────────────────────┼──────────►◄
                                   └─ mtu <max_transfer_unit>─┘
```

where:

<interface>
is the interface name.

<ip_address>
is the IP address of your Linux instance.

<peer_ip_address>
for direct connections this is the IP address of the communication peer; for routed connections this is the IP address of the TCP/IP service machine or Linux router to connect to.

<max_transfer_unit>
is the size in byte of the largest IP packets which may be transmitted. The default is 9216. The valid range is 576 through 32764.

Note: An increase in buffer size is accompanied by an increased risk of running into memory problems. Thus a large buffer size increases speed of data transfer only if no out-of-memory-conditions occur.

For more details, see the **ip** man page.

Example

This example activates a connection to a TCP/IP service machine with IP address 1.2.3.200 using a maximum transfer unit of 32764 bytes.

```
# ip addr add 1.2.3.100 dev iucv1 peer 1.2.3.200
# ip link set dev iucv1 up mtu 32764
```

Deactivating and removing an interface

Use **ip** or an equivalent command to deactivate an interface.

About this task

Issue a command of this form:

```
# ip link set dev <interface> down
```

where *<interface>* is the name of the interface to be deactivated.

You can remove the interface and its corresponding IUCV device by writing the interface name to the NETIUCV device driver's remove attribute. Issue a command of this form:

```
# echo <interface> > /sys/bus/iucv/drivers/netiucv/remove
```

where *<interface>* is the name of the interface to be removed. The interface name is of the form iucv*<n>*.

After the interface has been removed the interface name can be assigned again as interfaces are activated.

Example

This example deactivates and removes an interface iucv0 and its corresponding IUCV device:

```
# ip link set dev iucv0 down
# echo iucv0 > /sys/bus/iucv/drivers/netiucv/remove
```

Scenario: Setting up an IUCV connection to a TCP/IP service machine

Two Linux instances with guest IDs LNX1 and LNX2 are to be connected through a TCP/IP service machine with guest ID VMTCPIP.

About this task

Both Linux instances and the service machine run as guests of the same z/VM system. A separate IP subnet (different from the subnet used on the LAN) has been obtained from the network administrator. IP address 1.2.3.4 is assigned to guest LNX1, 1.2.3.5 is assigned to guest LNX2, and 1.2.3.10 is assigned to the service machine, see Figure 61.

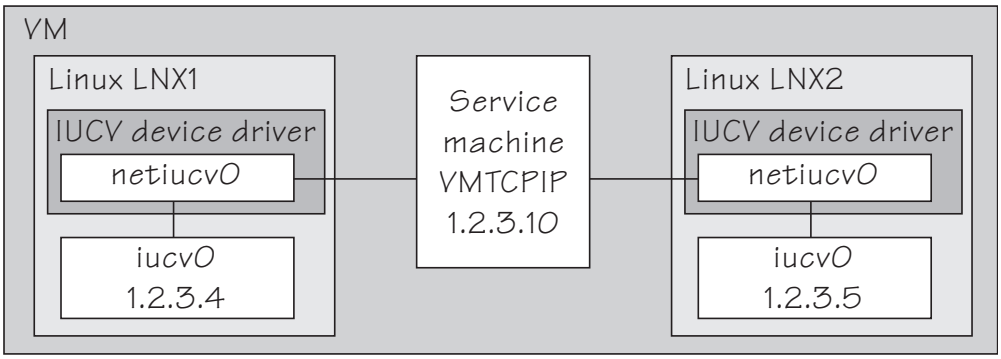

Figure 61. IUCV connection scenario

Setting up the service machine

Setting up the service machine entails editing the `PROFILE TCPIP` file of the service machine.

Procedure

Proceed like this to set up the service machine:

1. For each guest that is to have an IUCV connection to the service machine add a home entry, device, link, and start statement to the service machine's `PROFILE TCPIP` file. The statements have the form:

```
Home
 <ip_address1> <link_name1>
 <ip_address2> <link_name2>
 ...

Device <device_name1> IUCV 0 0 <guest_ID1> A
Link <link_name1> IUCV 0  <device_name1>

Device <device_name2> IUCV 0 0 <guest_ID2> A
Link <link_name2> IUCV 0  <device_name2>
```

```
...

Start <device_name1>
Start <device_name2>
...
```

where

<ip_address1>, <ip_address2>
: are the IP address the Linux instances.

<link_name1>, <link_name2>, ...
: are variables that associate the link statements with the respective home statements.

<device_name1>, <device_name2>, ...
: are variables that associate the device statements with the respective link statements and start commands.

<guest_ID1>, <guest_ID1>, ...
: identify the z/VM guest virtual machines on which the connected Linux instances run.

In our example, the `PROFILE TCPIP` entries for our example might look of this form:

```
Home
 1.2.3.4 LNK1
 1.2.3.5 LNK2

Device DEV1 IUCV 0 0 LNX1 A
Link LNK1 IUCV 0  DEV1

Device DEV2 IUCV 0 0 LNX2 A
Link LNK2 IUCV 0  DEV2

Start DEV1
Start DEV2
...
```

2. Add the necessary z/VM TCP/IP routing statements (BsdRoutingParms or Gateway). Use an MTU size of 9216 and a point-to-point host route (subnet mask 255.255.255.255). If you use dynamic routing, but do not wish to run routed or gated on Linux, update the z/VM `ETC GATEWAYS` file to include permanent host entries for each Linux instance.
3. Bring these updates online by using `OBEYFILE` or by recycling `TCPIP` and/or `ROUTED` as needed.

Setting up Linux instance LNX1

Setting up the Linux instance entails setting up the NETIUCV device driver and creating an IUCV interface.

Procedure

Proceed like this to set up the IUCV connection on the Linux instance:

1. Set up the NETIUCV device driver as described in "Setting up the NETIUCV device driver" on page 314.
2. Create an IUCV interface for connecting to the service machine:

```
# echo VMTCPIP /sys/bus/iucv/drivers/netiucv/connection
```

This creates an interface, for example, iucv0, with a corresponding IUCV device and a device entry in sysfs `/sys/bus/iucv/devices/netiucv0`.

3. The peer, LNX2 is set up accordingly. When both interfaces are ready to be connected to, activate the connection.

```
# ip addr add 1.2.3.4 dev iucv0 peer 1.2.3.10
# ip link set dev iucv1 up mtu 32764
```

Chapter 19. AF_IUCV address family support

The AF_IUCV address family provides an addressing mode for communications between applications that run on z Systems mainframes.

This addressing mode can be used for connections through real HiperSockets and through the z/VM Inter-User Communication Vehicle (IUCV).

Support for AF_IUCV based connections through real HiperSockets requires Completion Queue Support.

HiperSockets devices facilitate connections between applications across LPARs within a z Systems mainframe. In particular, an application that runs on an instance of Linux on z Systems can communicate with:

- Itself
- Other applications that run on the same Linux instance
- An application on an instance of Linux on z Systems in another LPAR

IUCV facilitates connections between applications across z/VM guest virtual machines within a z/VM system. In particular, an application that runs on Linux on z/VM can communicate with:

- Itself
- Other applications that run on the same Linux instance
- Applications running on other instances of Linux on z/VM, within the same z/VM system
- Applications running on a z/VM guest other than Linux, within the same z/VM system
- The z/VM control program (CP)

The AF_IUCV address family supports stream-oriented sockets (SOCK_STREAM) and connection-oriented datagram sockets (SOCK_SEQPACKET). Stream-oriented sockets can fragment data over several packets. Sockets of type SOCK_SEQPACKET always map a particular socket write or read operation to a single packet.

Features

The AF_IUCV address family provides socket connections for HiperSockets and IUCV.

For all instances of Linux on z Systems, the AF_IUCV address family provides the following features:

- Multiple outgoing socket connections for real HiperSockets
- Multiple incoming socket connections for real HiperSockets

For instances of Linux on z/VM, the AF_IUCV address family also provides the following features:

- Multiple outgoing socket connections for IUCV
- Multiple incoming socket connections for IUCV

- Socket communication with applications that use the CMS AF_IUCV support

Setting up the AF_IUCV address family support

You must authorize your z/VM guest virtual machine and load those components that were compiled as separate modules.

There are no module parameters for the AF_IUCV address family support.

Setting up HiperSockets devices for AF_IUCV addressing

In AF_IUCV addressing mode, HiperSockets devices in layer 3 mode are identified through their `hsuid` sysfs attribute.

You set up a HiperSockets device for AF_IUCV by assigning a value to this attribute (see "Configuring a HiperSockets device for AF_IUCV addressing" on page 263).

Setting up your z/VM guest virtual machine for IUCV

You must specify suitable IUCV statements for your z/VM guest virtual machine.

For details and for general IUCV setup information for z/VM guest virtual machines, see *z/VM CP Programming Services*, SC24-6179 and *z/VM CP Planning and Administration*, SC24-6178.

Granting IUCV authorizations

Use the IUCV statement to grant the necessary authorizations.

`IUCV ALLOW`
allows any other z/VM virtual machine to establish a communication path with this z/VM virtual machine. With this statement, no further authorization is required in the z/VM virtual machine that initiates the communication.

`IUCV ANY`
allows this z/VM guest virtual machine to establish a communication path with any other z/VM guest virtual machine.

`IUCV <user ID>`
allows this z/VM guest virtual machine to establish a communication path to the z/VM guest virtual machine with the z/VM user ID <*user ID*>.

You can specify multiple IUCV statements. To any of these IUCV statements you can append the MSGLIMIT <*limit*> parameter. <*limit*> specifies the maximum number of outstanding messages that are allowed for each connection that is authorized by the statement. If no value is specified for MSGLIMIT, AF_IUCV requests 65 535, which is the maximum that is supported by IUCV.

Setting a connection limit

Use the OPTION statement to limit the number of concurrent connections.

`OPTION MAXCONN <maxno>`
<*maxno*> specifies the maximum number of IUCV connections that are allowed for this virtual machine. The default is 64. The maximum is 65 535.

Example

These sample statements allow any z/VM guest virtual machine to connect to your z/VM guest virtual machine with a maximum of 10 000 outstanding messages for each incoming connection. Your z/VM guest virtual machine is permitted to connect to all other z/VM guest virtual machines. The total number of connections for your z/VM guest virtual machine cannot exceed 100.

```
IUCV ALLOW MSGLIMIT 10000
IUCV ANY
OPTION MAXCONN 100
```

Loading the IUCV modules

SUSE Linux Enterprise Server 12 SP3 loads the af_iucv module when an application requests a socket with the AF_IUCV addressing mode. You can also use the **modprobe** command to load the AF_IUCV address family support module.

```
# modprobe af_iucv
```

Addressing AF_IUCV sockets in applications

To use AF_IUCV sockets in applications, you must code a special AF_IUCV sockaddr structure.

Application programmers: This information is intended for programmers who want to use connections that are based on AF_IUCV addressing in their applications.

The primary difference between AF_IUCV sockets and TCP/IP sockets is how communication partners are identified (for example, how they are named). To use the AF_IUCV support in an application, code a sockaddr structure with AF_IUCV as the socket address family and with AF_IUCV address information.

```
struct sockaddr_iucv {
    sa_family_t    siucv_family;     /* AF_IUCV */
    unsigned short siucv_port;       /* reserved */
    unsigned int   siucv_addr;       /* reserved */
    char           siucv_nodeid[8];  /* reserved */
    char           siucv_userid[8];  /* guest user id */
    char           siucv_name[8];    /* application name */
};
```

Where:

siucv_family
is set to AF_IUCV (= 32).

siucv_port, siucv_addr, and siucv_nodeid
are reserved for future use. The `siucv_port` and `siucv_addr` fields must be zero. The `siucv_nodeid` field must be set to exactly eight blanks.

siucv_userid
specifies a HiperSockets device or a z/VM guest virtual machine. This specification implicitly sets the connection type for the socket to a HiperSockets connection or to a z/VM IUCV connection.

This field must be 8 characters long and, if necessary, padded at the end with blanks.

For HiperSockets connections, the `siucv_userid` field specifies the identifier that is set with the `hsuid` sysfs attribute of the HiperSockets device. For `bind` this is the identifier of a local device, and for `connect` this is the identifier of the HiperSockets device of the communication peer.

For IUCV connections, the `siucv_userid` field specifies a z/VM user ID. For `bind` this is the identifier of the local z/VM guest virtual machine, and for `connect` this is the identifier of the z/VM guest virtual machine for the communication peer.

Tip: For `bind`, you can also specify 8 blanks. The AF_IUCV address family support then automatically substitutes the local z/VM user ID for you.

`siucv_name`
is set to the application name by which the socket is known. Servers advertise application names and clients use these application names to connect to servers. This field must be 8 characters long and, if necessary, padded with blanks at the end.

Similar to TCP or UDP ports, application names distinguish distinct applications on the same operating system instance. Do not call `bind` for names that begin with `lnxhvc`. These names are reserved for the z/VM IUCV HVC device driver.

For details, see the af_iucv man page.

Chapter 20. RDMA over Converged Ethernet

Linux on z Systems supports RDMA over Converged Ethernet (RoCE) in the form of 10GbE RoCE Express features.

A 10GbE RoCE Express feature physically consists of a Mellanox ConnectX-3 EN or Mellanox ConnectX-4 adapter. The adapters are two-port Ethernet adapters. On a mainframe, the mapping of ports to function keys depend on the adapter hardware:

- The two Mellanox ConnectX-3 EN adapter ports belong to the same function ID.
- The two Mellanox ConnectX-4 adapter ports belong to different function IDs.

The RoCE support requires PCI Express support, see "PCI Express support" on page 19.

Working with the RoCE support

Because the 10 GBE RoCE Express feature hardware physically consists of a Mellanox adapter, you must ensure that the following prerequisites are fulfilled before you can work with it.

Procedure

1. Ensure that PCIe support is enabled and the PCI card is active on your system. See "Setting up the PCIe support" on page 19 and "Using PCIe hotplug" on page 20.
2. Use the appropriate Mellanox device driver:
   - If you want to use TCP/IP, you need the `mlx4_core` and `mlx4_en` or `mlx5_core` module. If it is not compiled into kernel or already loaded, load it using for example, **`modprobe`**.
   - If you also want to use RDMA with InfiniBand (that is, using reliable datagram sockets, RDS), you need the `mlx4_ib` module. If it is not compiled into kernel or already loaded, load it using for example, **`modprobe`**. To use RDS, you also need the `rds` module and the `rds_rdma` module, see https://www.openfabrics.org/index.php/ofed-for-linux-ofed-for-windows/installing-ofed.html.
3. Activate the network interface. You need to know the network interface name, which you can find under:
   - `/sys/bus/pci/drivers/mlx4_core/<pci_slot>/net/<interface>` for Mellanox ConnectX-3.
   - `/sys/bus/pci/drivers/mlx5_core/<pci_slot>/net/<interface>` for Mellanox ConnectX-4.

   Use the **`ip`** command or equivalent to activate the interface. See the `dev_port` sysfs attribute of the interface name to ensure that you are working with the correct port.

What to do next

For further information about Mellanox, see:

- http://www.mellanox.com/page/products_dyn?product_family=27&mtag=linux_driver

- http://www.mellanox.com/page/products_dyn?product_family=79&mtag=roce

Enabling debugging

The Mellanox mlx4 device driver can be configured with a kernel configuration option for debugging.

About this task

Debugging for the Mellanox mlx4 device driver is only available if the device driver is compiled with the kernel-configuration menu option CONFIG_MLX4_DEBUG.

Procedure

1. Check that the device driver has the CONFIG_MLX4_DEBUG option enabled.
2. Load the mlx4 modules with the sysfs parameter `debug_level=1` to write debug messages to the syslog. Check the value of the `debug_level` parameter . If the parameter is set to 0, you can set it to 1 with the following command:

   ```
   echo 1 > /sys/module/mlx4_core/parameters/debug_level
   ```

Part 5. System resources

These device drivers and features help you to manage the resources of your real or virtual hardware.

Newest version

You can find the newest version of this publication on IBM Knowledge Center at www.ibm.com/support/knowledgecenter/linuxonibm/liaaf/lnz_r_suse.html

Restrictions

For prerequisites and restrictions see the z Systems architecture specific information in the SUSE Linux Enterprise Server 12 SP3 release notes at www.suse.com/releasenotes

Chapter 21. Managing CPUs

You can read CPU capability, activate standby CPUs, and examine the CPU topology.

Use the **lscpu** and **chcpu** commands to manage CPUs. These commands are part of the util-linux package. For details, see the man pages. Alternatively, you can manage CPUs through the attributes of their entries in sysfs.

Some attributes that govern CPUs are available in sysfs under:
`/sys/devices/system/cpu/cpu<N>`

where <*N*> is the number of the logical CPU. Both the sysfs interface and the **lscpu** and **chcpu** commands manage CPUs through their logical representation in Linux.

You can obtain a mapping of logical CPU numbers to physical CPU addresses by issuing the **lscpu** command with the **-e** option.

Example:

```
# lscpu -e
CPU NODE DRAWER BOOK SOCKET CORE L1d:L1i:L2d:L2i ONLINE CONFIGURED POLARIZATION ADDRESS
0   1    0      0    0      0    0:0:0:0         yes    yes        horizontal   0
1   1    0      0    0      0    1:1:1:1         yes    yes        horizontal   1
2   1    0      0    0      1    2:2:2:2         yes    yes        horizontal   2
3   1    0      0    0      1    3:3:3:3         yes    yes        horizontal   3
4   1    0      0    0      2    4:4:4:4         yes    yes        horizontal   4
5   1    0      0    0      2    5:5:5:5         yes    yes        horizontal   5
6   1    0      0    0      3    6:6:6:6         yes    yes        horizontal   6
7   1    0      0    0      3    7:7:7:7         yes    yes        horizontal   7
8   0    1      1    1      4    8:8:8:8         yes    yes        horizontal   8
...
```

The logical CPU numbers are shown in the CPU column and the physical address in the ADDRESS column of the output table.

Alternatively, you can find the physical address of a CPU in the sysfs `address` attribute of a logical CPU.

Example:

```
# cat /sys/devices/system/cpu/cpu0/address
0
```

Simultaneous multithreading

Linux in LPAR mode can use the simultaneous multithreading technology on mainframes.

IBM z13 introduced the simultaneous multithreading technology to the mainframe. In Linux terminology, simultaneous multithreading is also known as SMT or Hyper-Threading.

With multithreading enabled, a single *core* on the hardware is mapped to multiple logical CPUs on Linux. Thus, multiple threads can issue instructions to a core simultaneously during each cycle.

To find out whether multithreading is enabled for a particular Linux instance, compare the number of cores with the number of threads that are available in the LPAR. You can use the **hyptop** command to obtain this information.

Simultaneous multithreading is designed to enhance performance. Whether this goal is achieved strongly depends on the available resources, the workload, and the applications that run on a particular Linux instance. Depending on these conditions, it might be advantageous to not make full use of mutithreading or to disable it completely. Use the **hyptop** command to obtain utilization data for threads while Linux runs with multithreading enabled.

You can use the `smt=` and `nosmt` kernel parameters to control multithreading. By default, Linux in LPAR mode uses multithreading if it is provided by the hardware.

CPU capability change

When the CPUs of a mainframe heat or cool, the Linux kernel generates a uevent for all affected online CPUs.

You can read the CPU capability from the Capability and, if present, Secondary Capability fields in `/proc/sysinfo`.

The capability value is an unsigned integer as defined in the system information block (SYSIB) 1.2.2 (see *z/Architecture Principles of Operation*, SA22-7832). A smaller value indicates a proportionally greater CPU capacity. Beyond that, there is no formal description of the algorithm that is used to generate this value. The value is used as an indication of the capability of the CPU relative to the capability of other CPU models.

Changing the configuration state of CPUs

A CPU on an LPAR can be in configuration state `configured`, `standby`, or `reserved`. You can change the state of `standby` CPUs to `configured` state and vice versa.

Before you begin

- You can change the configuration state of CPUs for Linux in LPAR mode only. For Linux on z/VM, CPUs are always in a `configured` state.
- Daemon processes like **cpuplugd** can change the state of any CPU at any time. Such changes can interfere with manual changes.

About this task

When Linux is booted, only CPUs that are in a `configured` state are brought online and used. The kernel does not detect CPUs in `reserved` state.

Procedure

Issue a command of this form to change the configuration state of a CPU:

```
# chcpu -c|-g <N>
```

where

<N>
is the number of the logical CPU.

-c changes the configuration state of a CPU from `standby` to `configured`.

-g changes the configuration state of a CPU from `configured` to `standby`. Only offline CPUs can be changed to the `standby` state.

Alternatively, you can write `1` to the `configure` sysfs attribute of a CPU to set its configuration state to `configured`, or `0` to change its configuration state to `standby`.

Examples:

- The following **chcpu** command changes the state of the logical CPU with number `2` from `standby` to `configured`:

```
# chcpu -c 2
```

  The following command achieves the same results by writing `1` to the `configure` sysfs attribute of the CPU.

```
# echo 1 > /sys/devices/system/cpu/cpu2/configure
```

- The following **chcpu** command changes the state of the logical CPU with number `2` from `configured` to `standby`:

```
# chcpu -g 2
```

  The following command achieves the same results by writing `0` to the `configure` sysfs attribute of the CPU.

```
# echo 0 > /sys/devices/system/cpu/cpu2/configure
```

Setting CPUs online or offline

Use the **chcpu** command or the `online` sysfs attribute of a logical CPU to set a CPU online or offline.

Before you begin

- Daemon processes like **cpuplugd** can change the state of any CPU at any time. Such changes can interfere with manual changes.

Procedure

1. Optional: Rescan the CPUs to ensure that Linux has a current list of configured CPUs.

   To initiate a rescan, issue the **chcpu** command with the **-r** option.

```
# chcpu -r
```

   Alternatively, you can write `1` to `/sys/devices/system/cpu/rescan`.

   You might need a rescan for Linux on z/VM after one or more CPUs have been added to the z/VM guest virtual machine by the z/VM hypervisor. Linux in LPAR mode automatically detects newly available CPUs.

2. Change the online state of a CPU by issuing a command of this form:

```
# chcpu -e|-d <N>
```

where

<N>
is the number of the logical CPU.

-e sets an offline CPU online. Only CPUs that are in the configuration state `configured` can be set online. For Linux on z/VM, all CPUs are in the `configured` state.

-d sets an online CPU offline.

Alternatively, you can write `1` to the `online` sysfs attribute of a CPU to set it online, or `0` to set it offline.

Examples:

- The following **chcpu** commands force a CPU rescan, and then set the logical CPU with number `2` online.

```
# chcpu -r
# chcpu -e 2
```

  The following commands achieve the same results by writing `1` to the `online` sysfs attribute of the CPU.

```
# echo 1 > /sys/devices/system/cpu/rescan
# echo 1 > /sys/devices/system/cpu/cpu2/online
```

- The following **chcpu** command sets the logical CPU with number `2` offline.

```
# chcpu -d 2
```

  The following command achieves the same results by writing `0` to the `online` sysfs attribute of the CPU.

```
# echo 0 > /sys/devices/system/cpu/cpu2/online
```

Examining the CPU topology

If supported by your hardware, a sysfs interface provides information about the CPU topology of an LPAR.

Before you begin

Meaningful CPU topology information is available only to Linux in LPAR mode.

About this task

Use the topology information, for example, to optimize the Linux scheduler, which bases its decisions on which process gets scheduled to which CPU. Depending on the workload, this optimization might increase cache hits and therefore overall performance.

Note: By default, CPU topology support is enabled in the Linux kernel. If it is not suitable for your workload, disable the support by specifying the kernel parameter `topology=off` in your GRUB 2 configuration.

The following sysfs attributes provide information about the CPU topology:

```
/sys/devices/system/cpu/cpu<N>/topology/thread_siblings
/sys/devices/system/cpu/cpu<N>/topology/core_siblings
/sys/devices/system/cpu/cpu<N>/topology/book_siblings
/sys/devices/system/cpu/cpu<N>/topology/drawer_siblings
```

where <*N*> specifies a particular logical CPU number. These attributes contain masks that specify sets of CPUs.

Because the mainframe hardware is evolving over time, the terms *drawer*, *book*, *core*, and *thread* do not necessarily correspond to fixed hardware entities. What matters for the Linux scheduler is the levels of relatedness that these terms signify, not the physical embodiment of the levels. In this context, more closely related means sharing more resources, like caches.

The `thread_siblings`, `core_siblings`, `book_siblings`, and `drawer_siblings` attribute each contain a mask that specifies the CPU and its peers at a particular level of relatedness.

1. The `thread_siblings` attribute covers the CPU and its closely related peers.
2. The `core_siblings` attribute covers all CPUs of the `thread_siblings` attribute and peers related at the core level.
3. The `book_siblings` attribute covers all CPUs of the `core_siblings` attribute and peers related at the book level.
4. The `drawer_siblings` attribute covers all CPUs of the `book_siblings` attribute and peers related at the drawer level.

If a machine reconfiguration causes the CPU topology to change, `change` uevents are created for each online CPU.

Tip: You can obtain some of the topology information by issuing the **`lscpu`** command with the **`-e`** option.

CPU polarization

You can optimize the operation of a vertical SMP environment by adjusting the SMP factor based on the workload demands.

Before you begin

CPU polarization is relevant only to Linux in LPAR mode.

About this task

Horizontal CPU polarization means that the PR/SM™ hypervisor dispatches each virtual CPU of all LPARs for the same amount of time.

With vertical CPU polarization, the PR/SM hypervisor dispatches certain CPUs for a longer time than others. For example, if an LPAR has three virtual CPUs, each of them with a share of 33%, then in case of vertical CPU polarization, all of the processing time would be combined to a single CPU. This CPU would run most of the time while the other two CPUs would get nearly no time.

There are three types of vertical CPUs: high, medium, and low. Low CPUs hardly get any real CPU time, while high CPUs get a full real CPU. Medium CPUs get something in between.

Note: Running a system with different types of vertical CPUs can result in significant performance regressions. If possible, use only one type of vertical CPUs. Set all other CPUs offline and deconfigure them.

Procedure

To change the polarization, issue a command of this form:

```
# chcpu -p horizontal|vertical
```

Alternatively, you can write a `0` for horizontal polarization (the default) or a `1` for vertical polarization to `/sys/devices/system/cpu/dispatching`.

Example: The following **`chcpu`** command sets the polarization to `vertical`.

```
# chcpu -p vertical
```

You can achieve the same results by issuing the following command:

```
# echo 1 > /sys/devices/system/cpu/dispatching
```

What to do next

You can issue the **`lscpu`** command with the **`-e`** option to find out the polarization of your CPUs. For more detailed information for a particular CPU, read the `polarization` attribute of the CPU in sysfs.

```
# cat /sys/devices/system/cpu/cpu<N>/polarization
```

The polarization can have one of the following values:

- `horizontal` - each of the guests' virtual CPUs is dispatched for the same amount of time.
- `vertical:high` - full CPU time is allocated.
- `vertical:medium` - medium CPU time is allocated.
- `vertical:low` - very little CPU time is allocated.
- `unknown` - temporary value following a polarization change until the change is completed and the kernel has established the new polarization of each CPU.

Chapter 22. NUMA emulation

The NUMA emulation on Linux on z Systems distributes the available memory to logical NUMA nodes without using topology information about the physical memory.

Linux maintains separate memory management structures for each node. Especially on large systems, this separation can improve the overall system performance, or latency, or both.

What you should know about NUMA emulation

The NUMA emulation distributes memory and CPU resources among NUMA nodes.

Memory distribution and stripe size

The NUMA emulation splits the usable system memory into stripes of a fixed size.

These memory stripes are then distributed, in round-robin mode, among the NUMA nodes. You can configure the number of NUMA nodes and the stripe size through kernel parameters (see "Configuring NUMA emulation" on page 338).

The difference between nodes in assigned memory cannot exceed the stripe size, so configuring small stripes leads to a balanced distribution. Howerer, the stripes must not be too small, otherwise failing memory allocations prevent the kernel from booting. The minimum stripe size depends on the maximum number of CPUs (CONFIG_NR_CPUS) for which the kernel is compiled. For example, 2 CPUs require a minimum size of about 4 MB and 256 CPUs require about 512 MB.

Another approach to achieving a balanced memory distribution is to configure large stripes, such that exactly one stripe is assigned to each NUMA node.

CPU assignment to NUMA nodes

The Linux scheduler requires a stable mapping of CPUs to NUMA nodes. Therefore, cores are pinned to NUMA nodes when one of their CPUs is set online for the first time.

As a consequence, a CPU that is set offline is always assigned to its previous NUMA node when it is set back online. With multithreading enabled, a CPU is equivalent to a thread (see "Simultaneous multithreading" on page 331).

Pinned cores are distributed evenly across the NUMA nodes. You can distort this initial balance by setting a disproportionate number of CPUs from a particular NUMA node offline. New CPUs are assigned according to the number of pinned cores, not according to the number of online CPUs.

For example, assume a node A that has two cores and with one of four CPUs (threads) online. Further, assume a node B that has one core but two CPUs online. Because node B has fewer cores than node A, a newly configured CPU that is set online is assigned to node B, and the corresponding core is pinned to node B.

Note: Do not use NUMA emulation with **cpuplugd**. The **cpuplugd** daemon can distort the balance of CPU assignment to NUMA nodes. Issue the following command to find out if **cpuplugd** is running:

```
# service cpuplugd status
```

See also "cpuplugd - Control CPUs and memory" on page 533.

Configuring NUMA emulation

You configure NUMA emulation through kernel parameters.

NUMA emulation kernel parameter syntax

```
                  ┌ emu_nodes=1          ┐   ┌ emu_size=256M          ┐
►►─numa=emu──────┼──────────────────────┼───┼────────────────────────┼──────────►
                  └ emu_nodes=<number>   ┘   └ emu_size=<stripe_size> ┘

                                  (1)
  ┌ numa_balancing=disable ┐
►─┼────────────────────────┼──┬──────────────┬──┬──────────────┬──────────────►◄
  └ numa_balancing=enable  ┘  └ numa_debug   ┘  └ sched_debug  ┘
```

Notes:

1 Do not enable NUMA balancing.

where:

numa=emu
Sets the NUMA emulation mode and enables NUMA for the Linux instance.

emu_nodes=<*number*>
Specifies the number of NUMA nodes to be emulated. The default is 1. Emulating only one NUMA node, in effect, disables NUMA.

emu_size=<*stripe_size*>
Specifies the memory stripe size in byte. You can use the k, M, G, and T suffixes. The default size is 256 MB.

The memory stripe size must be a multiple of the memory block size (see "Finding out the memory block size" on page 343).

For other considerations about setting the stripe size see "Memory distribution and stripe size" on page 337.

numa_balancing
Do not enable NUMA balancing.

numa_debug
Enables kernel debug messages for the NUMA emulation on z Systems.

sched_debug
Enables scheduler kernel debug messages.

Example

```
numa=emu emu_nodes=4 emu_size=1G
```

Chapter 23. Managing hotplug memory

You can dynamically increase or decrease the memory for your running Linux instance.

To make memory available as hotplug memory, you must define it to your LPAR or z/VM. Hotplug memory is supported by z/VM 5.4 with the PTF for APAR VM64524 and by later z/VM versions.

For more information about memory hotplug, see `Documentation/memory-hotplug.txt` in the Linux source tree.

What you should know about memory hotplug

Hotplug memory is represented in sysfs. After rebooting Linux, all hotplug memory is offline.

Hotplug memory management overhead

Linux requires 64 bytes of memory to manage a 4-KB page of hotplug memory.

Use the following formula to calculate the total amount of initial memory that is consumed to manage your hotplug memory:

```
<hotplug memory> / 64
```

Example: 4.5 TB of hotplug memory consume `4.5 TB / 64 = 72 GB`.

For large amounts of hotplug memory, you might have to increase the initial memory that is available to your Linux instance. Otherwise, booting Linux might fail with a kernel panic and a message that there is not enough free memory.

How memory is represented in sysfs

Both the core memory of a Linux instance and the available hotplug memory are represented by directories in sysfs.

The memory with which Linux is started is the *core memory*. On the running Linux system, additional memory can be added as *hotplug memory*. The Linux kernel requires core memory to allocate its own data structures.

In sysfs, both the core memory of a Linux instance and the available hotplug memory are represented in form of memory blocks of equal size. Each block is represented as a directory of the form `/sys/devices/system/memory/memory<n>`, where <*n*> is an integer. You can find out the block size by reading the `/sys/devices/system/memory/block_size_bytes` attribute.

In the naming scheme, the memory blocks with the lowest address ranges are assigned the lowest integer numbers. The core memory always begins with memory0. The hotplug memory blocks follow the core memory blocks.

You can calculate where the hotplug memory begins. To find the number of core memory blocks, divide the base memory by the block size.

Example:

- With a core memory of 512 MB and a block size of 128 MB, the core memory is represented by four blocks, memory0 through memory3. Therefore, first hotplug memory block on this Linux instance is memory4.
- Another Linux instance with a core memory of 1024 MB and access to the same hotplug memory, represents this first hotplug memory block as memory8.

The hotplug memory is available to all operating system instances within the z/VM system or LPAR to which it was defined. The `state` sysfs attribute of a memory block indicates whether the block is in use by your own Linux system. The `state` attribute does not indicate whether a block is in use by another operating system instance. Attempts to add memory blocks that are already in use fail.

Hotplug memory and reboot

The original core memory is preserved as core memory and hotplug memory is freed when rebooting a Linux instance.

When you perform an IPL after shutting down Linux, always use **`ipl clear`** to preserve the original memory configuration.

Memory zones

The Linux kernel divides memory into memory zones. On a mainframe, three zones are used: `DMA`, `Normal`, and `Movable`.

- Memory in the `DMA` zone is below 2 GB, and some I/O operations require that memory buffers are located in this zone.
- Memory in the `Normal` zone is above 2 GB, and it can be used for all memory allocations that do not require zone DMA.
- Memory in the `Movable` zone cannot be used for arbitrary kernel allocations, but only for memory buffers that can easily be moved by the kernel, such as user memory allocations and page cache memory. Memory in the `Movable` zone can more easily be taken offline than memory in other zones.

The zones that are available to a memory block are listed in the `valid_zones` sysfs attribute. For more information, see "Adding memory" on page 344.

Setting up hotplug memory

Before you can use hotplug memory on your Linux instance, you must define this memory as hotplug memory on your physical or virtual hardware.

Defining hotplug memory to an LPAR

You use the Hardware Management Console (HMC) to define hotplug memory as *reserved storage* on an LPAR.

For information about defining reserved storage for your LPAR, see the *Processor Resource/Systems Manager Planning Guide*, SB10-7041 for your mainframe.

Defining hotplug memory to z/VM

In z/VM, you define hotplug memory as *standby storage*.

There is also *reserved storage* in z/VM, but other than reserved memory defined for an LPAR, reserved storage that is defined in z/VM is not available as hotplug memory.

Always align the z/VM guest storage with the Linux memory block size. Otherwise, memory blocks might be missing or impossible to set offline in Linux.

For information about defining standby memory for z/VM guests see the "DEFINE STORAGE" section in *z/VM CP Commands and Utilities Reference*, SC24-6175.

Performing memory management tasks

Typical memory management tasks include finding out the memory block size, adding memory, and removing memory.

- "Finding out the memory block size"
- "Listing the available memory blocks"
- "Adding memory" on page 344
- "Removing memory" on page 345

Finding out the memory block size

On a z Systems mainframe, memory is provided to Linux as memory blocks of equal size.

Procedure

- Use the **lsmem** command to find out the size of your memory blocks (see "lsmem - Show online status information about memory blocks" on page 601).

  Example:

```
# lsmem
Address range                           Size (MB)  State    Removable  Device
==============================================================================
0x0000000000000000-0x000000000fffffff        256  online   no         0
0x0000000010000000-0x000000002fffffff        512  online   yes        1-2
0x0000000030000000-0x000000003fffffff        256  online   no         3
0x0000000040000000-0x000000006fffffff        768  online   yes        4-6
0x0000000070000000-0x00000000ffffffff       2304  offline  -          7-15

Memory device size  : 256 MB
Memory block size   : 256 MB
Total online memory : 1792 MB
Total offline memory: 2304 MB
```

  In the example, the block size is 256 MB.

- Alternatively, you can read `/sys/devices/system/memory/block_size_bytes`. This sysfs attribute contains the block size in byte in hexadecimal notation.

  Example:

```
# cat /sys/devices/system/memory/block_size_bytes
10000000
```

  This hexadecimal value corresponds to 256 MB.

Listing the available memory blocks

List the available memory to find out how much memory is available and which memory blocks are online.

Procedure

- Use the **lsmem** command to list your memory blocks.

  Example:

```
# lsmem -a
Address range                           Size (MB)  State    Removable  Device
==============================================================================
0x0000000000000000-0x000000000fffffff        256  online   no         0
0x0000000010000000-0x000000001fffffff        256  online   no         1
0x0000000020000000-0x000000002fffffff        256  online   no         2
0x0000000030000000-0x000000003fffffff        256  online   yes        3
0x0000000040000000-0x000000004fffffff        256  online   yes        4
0x0000000050000000-0x000000005fffffff        256  offline  -          5
0x0000000060000000-0x000000006fffffff        256  offline  -          6
0x0000000070000000-0x000000007fffffff        256  offline  -          7

Memory device size  : 256 MB
Memory block size   : 256 MB
Total online memory : 1280 MB
Total offline memory: 786 MB
```

  For more information about the **lsmem** command, see "lsmem - Show online status information about memory blocks" on page 601.

- Alternatively, you can list the available memory blocks by listing the contents of `/sys/devices/system/memory`. Read the `state` attributes of each memory block to find out whether it is online or offline.

  Example: The following command results in an overview for all available memory blocks.

```
# grep -r --include="state" "line" /sys/devices/system/memory/
/sys/devices/system/memory/memory0/state:online
/sys/devices/system/memory/memory1/state:online
/sys/devices/system/memory/memory2/state:online
/sys/devices/system/memory/memory3/state:online
/sys/devices/system/memory/memory4/state:online
/sys/devices/system/memory/memory5/state:offline
/sys/devices/system/memory/memory6/state:offline
/sys/devices/system/memory/memory7/state:offline
```

Note

Online blocks are in use by your Linux instance. An offline block can be free to be added to your Linux instance but it might also be in use by another Linux instance.

Adding memory

You can add memory to your Linux instance by setting unused memory blocks online. You can chose a memory zone for certain memory blocks.

Suspend and resume:

Do not add hotplug memory if you intend to suspend the Linux instance before the next IPL. Any changes to the original memory configuration prevent suspension, even if you restore the original memory configuration by removing memory blocks that were added. See Chapter 6, "Suspending and resuming Linux," on page 77 for more information about suspending and resuming Linux.

About this task

The valid zones for each memory block can be read from the `valid_zones` sysfs attribute:

```
# cat /sys/devices/system/memory/memory<n>/valid_zones
Normal Movable
```

If you intend to take the memory offline again (for example, memory ballooning), preferably add hotplug memory to the `Movable` zone.

For more information about memory zones, see "Memory zones" on page 342.

Procedure

To add hotplug memory:

- Use the `state` sysfs attribute of an unused memory block. Issue a command of the form:

  ```
  # echo online_value > /sys/devices/system/memory/memory<n>/state
  ```

  where *online_value* is one of:

  online sets the memory block online to the default zone. The default zone is the first zone listed in the `valid_zones` sysfs attribute.

  online_movable
  sets the memory block online to the `Movable` zone. Setting the block online fails if the `Movable` zone is not listed in the `valid_zones` sysfs attribute.

  online_kernel
  sets the memory block online to the first non-Movable zone listed in the `valid_zones` directory. Setting the block online fails if the `Movable` zone is the only zone listed in the `valid_zones` sysfs attribute.

  <n> is an integer that identifies the memory unit.
- Use the **chmem** command with the **-e** parameter to set memory online. You can specify the amount of memory you want to add with the command without specifying particular memory blocks. If there are enough eligible memory blocks to satisfy your request, the tool finds them for you and sets the most suitable blocks online. The **chmem** command in SLES 12 SP3 always tries to set memory online to the zone `Movable`, if this zone is available as a valid zone. For information about the **chmem** command, see "chmem - Set memory online or offline" on page 505.

Results

Adding the memory block fails if the memory block is already in use. The `state` attribute changes to `online` when the memory block has been added successfully.

Removing memory

You can remove memory from your Linux instance by setting memory blocks offline.

About this task

Avoid removing core memory. The Linux kernel requires core memory to allocate its own data structures.

Procedure

- Use the **chmem** command with the **-d** parameter to set memory offline. You can specify the amount of memory you want to remove with the command without specifying particular memory blocks. The tool finds eligible memory blocks for you and sets the most suitable blocks offline. For information about the **chmem** command, see "chmem - Set memory online or offline" on page 505.
- Alternatively, you can write `offline` to the sysfs `state` attribute of an unused memory block. Issue a command of the form:

  ```
  # echo offline > /sys/devices/system/memory/memory<n>/state
  ```

  where <*n*> is an integer that identifies the memory unit.

Results

The hotplug memory functions first relocate memory pages to free the memory block and then remove it. The `state` attribute changes to offline when the memory block has been removed successfully.

The memory block is not removed if it cannot be freed completely.

Chapter 24. Large page support

Large page support entails support for the Linux hugetlbfs file system.

The large page support virtual file system is backed by larger memory pages than the usual 4 K pages; for z Systems the hardware page size is 1 MB.

To check whether 1 MB large pages are supported in your environment, issue the command:

```
# grep edat /proc/cpuinfo
features        : esan3 zarch stfle msa ldisp eimm dfp edat etf3eh highgprs te
```

An output line that lists `edat` as a feature indicates 1 MB large page support.

Applications that use large page memory save a considerable amount of page table memory. Another benefit from the support might be an acceleration in the address translation and overall memory access speed.

SUSE Linux Enterprise Server 12 SP3 supports libhugetlbfs linking. For more information, see the libhugetlbfs package and the how-to document that is included in the package.

SUSE Linux Enterprise Server 12 SP3 also supports transparent hugepages. For more information, see `Documentation/vm/transhuge.txt` in the Linux source tree.

As of zEC12, you can also configure 2 GB large pages if Linux is running on an LPAR. There is no flag that indicates 2 GB support; the support is always there as of zEC12. See "Pre-allocating 2 GB large pages" on page 348.

Setting up hugetlbfs large page support

You configure hugetlbfs large page support by adding parameters to the kernel parameter line.

Large page support kernel parameter syntax

```
►►─┬─default_hugepagesz=1M──────────┬──┬──────────────────────────────┬──────────►◄
   │                                │  ▼                              │
   └─default_hugepagesz=<size>──────┘  └─hugepagesz=<size>──hugepages=<number>─┘
```

where:

default_hugepagesz=<*size*>
specifies the default page size in byte. You can use suffixes K, M, and G to specify KB, MB, and GB. The default value is 1 MB. The hugetlbfs file system uses the default large page size when mounted without options. The large

page statistics in `/proc/meminfo` and the sysctl in `/proc/sys/vm/nr_hugepages` consider only the default-sized large page pool, if there is more than one large page pool.

hugepages=<*number*>
is the number of large pages to be allocated at boot time.

hugepagesz=<*size*>
specifies the page size in byte. You can use suffixes K, M, and G to specify KB, MB, and GB.

Note: If you specify more pages than available, Linux reserves as many as possible. As a likely result, too few general pages remain for the boot process, and your system stops with an out-of-memory error.

Pre-allocating 2 GB large pages

Before you can use 2 GB large pages, you must pre-allocate them to the kernel page pool. To pre-allocate 2 GB pages, precede the **hugepages=** parameter with the page size selection parameter, **hugepagesz=2G**.

Tip: Memory quickly becomes fragmented after booting, and new 2 GB large pages cannot be allocated. Use kernel boot parameters to allocate 2 GB large pages to avoid the memory fragmentation problem.

To pre-allocate a number of pages of 2 GB size and also set the default size to 2 GB:

```
default_hugepagesz=2G hugepagesz=2G hugepages=<number>
```

Setting up multiple large page pools

You can allocate multiple large page pools and use them simultaneously. To allocate multiple large page pools, specify the `hugepagesz=` parameter several times, each time followed by a corresponding `hugepages=` parameter.

For example, to specify two pools, one with 1 MB pages and one with 2 GB pages, specify:

```
hugepagesz=1M hugepages=8 hugepagesz=2G hugepages=2
```

This creates a sysfs directory for each pool, `/sys/kernel/mm/hugepages/hugepages-<size>kB`, where *<size>* is the page size in KB. The sysfs directories contain attributes for the statistics and runtime allocation for each large page pool. For the example given, the following attributes are created:

```
/sys/kernel/mm/hugepages/hugepages-1024kB
/sys/kernel/mm/hugepages/hugepages-2097152kB
```

Large pages and hotplug memory

Hotplug memory that is added to a running Linux instance is movable and can be allocated to movable resources only.

By default, large pages are not movable and cannot be allocated from movable memory. You can enable allocation from movable memory with the sysctl setting `hugepages_treat_as_movable`.

To enable allocation of large pages from movable hotplug memory, issue:

```
# echo 1 > /proc/sys/vm/hugepages_treat_as_movable
```

Although this setting makes large pages eligible for allocation through movable memory, it does not make large pages movable. As a result, the allocated hotplug memory cannot be set offline until all large pages are released from that memory.

To disable allocation of large pages from movable hotplug memory, issue:

```
# echo 0 > /proc/sys/vm/hugepages_treat_as_movable
```

Working with hugetlbfs large page support

Typical tasks for working with hugetlbfs large page support include reading the current number of large pages, changing the number of large pages, and display information about available large pages.

About this task

The large page memory can be used through `mmap()` or `SysV` shared memory system calls. More detailed information can be found in the Linux kernel source tree under `Documentation/vm/hugetlbpage.txt`, including implementation examples.

Your database product might support large page memory. See your database documentation to find out if and how it can be configured to use large page memory.

Depending on your version of Java, you might require specific options to make a Java™ program use the large page feature. For IBM SDK, Java Technology Edition 7, specify the **-Xlp** option. If you use the SysV shared memory interface, which includes **java -Xlp**, you must adjust the shared memory allocation limits to match the workload requirements. Use the following sysctl attributes:

/proc/sys/kernel/shmall
: Defines the global maximum amount of shared memory for all processes, specified in number of 4 KB pages.

/proc/sys/kernel/shmmax
: Defines the maximum amount of shared memory per process, specified in number of Bytes.

For example, the following commands would set both limits to 20 GB:

```
# echo 5242880 > /proc/sys/kernel/shmall
# echo 21474836480 > /proc/sys/kernel/shmmax
```

Procedure

- Specify the `hugepages=` kernel parameter with the number of large pages to be allocated at boot time. To read the current number of default-sized large pages, issue:

```
# cat /proc/sys/vm/nr_hugepages
```

- To change the number of default-sized large pages dynamically during runtime, write to procfs:

```
# echo 12 > /proc/sys/vm/nr_hugepages
```

  If there is not enough contiguous memory available to fulfill the request, the maximum possible number of large pages are reserved.

- To obtain information about the number of default-sized large pages currently available and the default large page size, issue:

```
# cat /proc/meminfo

...
HugePages_Total: 20
HugePages_Free: 14
HugePages_Rsvd: 0
HugePages_Surp: 0
Hugepagesize: 1024 KB
...
```

- To adjust characteristics of a large-page pool, when more than one pool exists, use the sysfs attributes of the pool. These can be found under

  `/sys/kernel/mm/hugepages/hugepages-<size>/nr_hugepages`

  Where <*size*> is the page size in KB.

Example

To allocate 2 GB large pages:

1. Specify 2 GB large pages and pre-allocate them to the page pool at boot time. Use the following kernel boot parameters:

```
default_hugepagesz=2G hugepagesz=2G hugepages=4
```

2. After booting, read `/proc/meminfo` to see information about the amount of large pages currently available and the large page size:

```
cat /proc/meminfo
...
HugePages_Total: 4
HugePages_Free: 4
HugePages_Rsvd: 0
HugePages_Surp: 0
Hugepagesize: 2097152 kB
...
```

Chapter 25. S/390 hypervisor file system

The S/390® hypervisor file system (hypfs) provides a mechanism to access LPAR and z/VM hypervisor data.

Directory structure

When the hypfs file system is mounted, the accounting information is retrieved and a file system tree is created. The tree contains a full set of attribute files with the hypervisor information.

By convention, the mount point for the hypervisor file system is `/sys/hypervisor/s390`.

LPAR directories and attributes

There are hypfs directories and attributes with hypervisor information for Linux in LPAR mode.

Figure 62 illustrates the file system tree that is created for LPAR.

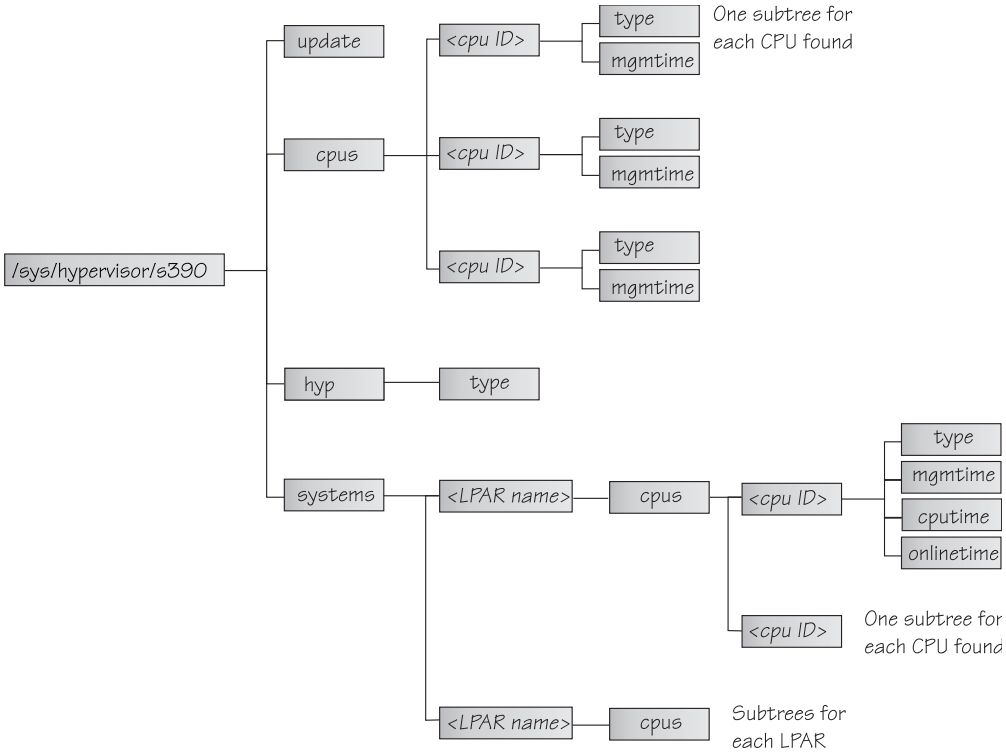

Figure 62. The hypervisor file system for LPAR

update Write-only file to trigger an update of all attributes.

cpus/ Directory for all physical cores.

cpus/<*core ID*>
Directory for one physical core. <*core_ ID*> is the logical (decimal) core number.

type Type name of physical core, such as CP or IFL.

mgmtime
Physical-LPAR-management time in microseconds (LPAR overhead).

hyp/ Directory for hypervisor information.

hyp/type
Type of hypervisor (LPAR hypervisor).

systems/
Directory for all LPARs.

systems/<*lpar name*>**/**
Directory for one LPAR.

systems/<*lpar name*>**/cpus/**<*core_ID*>**/**
Directory for the virtual cores for one LPAR. The <*core_ID*> is the logical (decimal) core number.

type Type of the logical core, such as CP or IFL.

mgmtime
LPAR-management time. Accumulated number of microseconds during which a physical core was assigned to the logical core and the core time was consumed by the hypervisor and was not provided to the LPAR (LPAR overhead).

cputime
Accumulated number of microseconds during which a physical core was assigned to the logical core and the core time was consumed by the LPAR.

onlinetime
Accumulated number of microseconds during which the logical core has been online.

Note: For LPARs with multithreading enabled, the entities in the cpus directories represent hardware cores, not threads.

Note: For older machines, the `onlinetime` attribute might be missing. Generally, it is advantageous for applications to tolerate missing attributes or new attributes that are added to the file system. To check the content of the files, you can use tools such as **cat** or **less**.

z/VM directories and attributes

There are hypfs directories and attributes with hypervisor information for Linux on z/VM.

update Write-only file to trigger an update of all attributes.

cpus/ Directory for all physical CPUs.

cpus/count
Total current CPUs.

hyp/ Directory for hypervisor information.

hyp/type
Type of hypervisor (z/VM hypervisor).

systems/
Directory for all z/VM guest virtual machines.

systems/<*guest name*>**/**
Directory for one guest virtual machine.

systems/<*guest name*>**/onlinetime_us**
Time in microseconds that the guest virtual machine has been logged on.

systems/<*guest name*>**/cpus/**
Directory for the virtual CPUs for one guest virtual machine.

capped Flag that shows whether CPU capping is on for the guest virtual machine (0 = off, 1 = soft, 2 = hard).

count Total current virtual CPUs in the guest virtual machine.

cputime_us
Number of microseconds where the guest virtual machine CPU was running on a physical CPU.

dedicated
Flag that shows if the guest virtual machine has at least one dedicated CPU (0 = no, 1 = yes).

weight_cur
Current share of guest virtual machine (1-10000); 0 for ABSOLUTE SHARE guests.

weight_max
Maximum share of guest virtual machine (1-10000); 0 for ABSOLUTE SHARE guests.

weight_min
Number of operating CPUs. Do not be confused by the attribute name, which suggests a different meaning.

systems/<*guest name*>**/samples/**
Directory for sample information for one guest virtual machine.

cpu_delay
Number of CPU delay samples that are attributed to the guest virtual machine.

cpu_using
Number of CPU using samples attributed to the guest virtual machine.

idle Number of idle samples attributed to the guest virtual machine.

mem_delay
Number of memory delay samples that are attributed to the guest virtual machine.

other Number of other samples attributed to the guest virtual machine.

total Number of total samples attributed to the guest virtual machine.

systems/<*guest name*>**/mem/**
Directory for memory information for one guest virtual machine.

max_KiB
Maximum memory in KiB (1024 bytes).

min_KiB
Minimum memory in KiB (1024 bytes).

share_KiB
Guest estimated core working set size in KiB (1024 bytes).

used_KiB
Resident memory in KiB (1024 bytes).

To check the content of the files, you can use tools such as **cat** or **less**.

Setting up the S/390 hypervisor file system

To use the file system, it must be mounted. You can mount the file system with the mount command or with an entry in `/etc/fstab`.

To mount the file system manually, issue the following command:

```
# mount none -t s390_hypfs <mount point>
```

where <*mount point*> is where you want the file system mounted. Preferably, use `/sys/hypervisor/s390`.

To mount hypfs by using `/etc/fstab`, add the following line:

```
none <mount point> s390_hypfs defaults 0 0
```

If your z/VM system does not support DIAG 2fc, the s390_hypfs is not activated and it is not possible to mount the file system. Instead, an error message like this is issued:

```
mount: unknown filesystem type 's390_hypfs'
```

To get data for all z/VM guests, privilege class B is required for the guest, where hypfs is mounted. For non-class B guests, data is provided only for the local guest.

To get data for all LPARs, select the **Global performance data control** check box in the HMC or SE security menu of the LPAR activation profile. Otherwise, data is provided only for the local LPAR.

Working with the S/390 hypervisor file system

Typical tasks that you must perform when working with the S/390 hypervisor file system include defining access permissions and updating hypfs information.

- "Defining access permissions"
- "Updating hypfs information" on page 355

Defining access permissions

The root user usually has access to the hypfs file system. It is possible to explicitly define access permissions.

About this task

If no mount options are specified, the files and directories of the file system get the uid and gid of the user who mounted the file system (usually root). You can explicitly define uid and gid by using the mount options `uid=<number>` and `gid=<number>`.

Example

You can define uid=1000 and gid=2000 with the following mount command:

```
# mount none -t s390_hypfs -o "uid=1000,gid=2000" <mount point>
```

Alternatively, you can add the following line to the `/etc/fstab` file:

```
none <mount point> s390_hypfs uid=1000,gid=2000 0 0
```

The first mount defines uid and gid. Subsequent mounts automatically have the same uid and gid setting as the first one.

The permissions for directories and files are as follows:

- Update file: 0220 (`--w--w----`)
- Regular files: 0440 (`-r--r-----`)
- Directories: 0550 (`dr-xr-x---`)

Updating hypfs information

You trigger the update process by writing something into the update file at the top-level hypfs directory.

Procedure

With hypfs mounted at `/sys/hypervisor/s390`, you can trigger the update process by issuing the following command:

```
# echo 1 > /sys/hypervisor/s390/update
```

During the update, the entire directory structure is deleted and rebuilt. If a file was open before the update, subsequent reads return the old data until the file is opened again. Within 1 second only one update can be done. If multiple updates are triggered within a second, only the first update is performed and subsequent write system calls return `-1` and errno is set to EBUSY.
Applications can use the following procedure to ensure consistent data:

1. Read modification time through `stat(2)` from the `update` attribute.
2. If data is too old, write to the `update` attribute start again with step 1.
3. Read data from file system.
4. Read modification time of the `update` attribute again and compare it with first timestamp. If the timestamps do not match, return to step 2.

Chapter 26. ETR- and STP-based clock synchronization

Your Linux instance might be part of an extended remote copy (XRC) setup that requires synchronization of the Linux time-of-day (TOD) clock with a timing network.

SUSE Linux Enterprise Server 12 SP3 for z Systems supports external time reference (ETR) and system time protocol (STP) based TOD synchronization. ETR and STP work independently of one another. If both ETR and STP are enabled, Linux might use either to synchronize the clock.

For more information about ETR, see the IBM Redbooks® technote at
`www.ibm.com/redbooks/abstracts/tips0217.html`

For information about STP, see
`www.ibm.com/systems/z/advantages/pso/stp.html`

ETR requires at least one ETR unit that is connected to an external time source. For availability reasons, many installations use a second ETR unit. The ETR units correspond to two ETR ports on Linux. Always set both ports online if two ETR units are available.

Attention: Be sure that a reliable timing signal is available before enabling clock synchronization. With enabled clock synchronization, Linux expects regular timing signals and might stop indefinitely to wait for such signals if it does not receive them.

Enabling clock synchronization when booting

Use kernel parameters to enable clock synchronization when booting.

You can use kernel parameters to set up synchronization for your Linux TOD clock. These kernel parameters specify the initial synchronization settings. On a running Linux instance, you can change these settings through attributes in sysfs (see “Enabling and disabling clock synchronization” on page 359).

Enabling ETR-based clock synchronization

Use the `etr=` kernel parameter to set ETR ports online when Linux is booted.

ETR-based clock synchronization is enabled if at least one ETR port is online.

etr syntax

```
     ┌─etr=off──┐
►►───┼──────────┼──────────────────────────────────────────────────►◄
     ├─etr=on───┤
     ├─etr=port0┤
     └─etr=port1┘
```

The values have the following effect:

on sets both ports online.

port0
sets `port0` online and `port1` offline.

port1
sets `port1` online and `port0` offline.

off
sets both ports offline. With both ports offline, ETR-based clock synchronization is not enabled. This is the default.

Example

To enable ETR-based clock synchronization with both ETR ports online, specify:

```
etr=on
```

Enabling STP-based clock synchronization

Use the `stp=` kernel parameter to enable STP-based clock synchronization when Linux is booted.

stp syntax

```
     ┌─stp=off─┐
►►───┤         ├──────────────────────────────────────────────────►◄
     └─stp=on──┘
```

By default, STP-based clock synchronization is not enabled.

Example

To enable STP-based clock synchronization, specify:

```
stp=on
```

Enabling and disabling clock synchronization

You can use the sysfs interfaces of ETR and STP to enable and disable clock synchronization on a running Linux instance.

Enabling and disabling ETR-based clock synchronization

Use the ETR sysfs attribute `online` to set an ETR port online or offline.

About this task

ETR-based clock synchronization is enabled if at least one of the two ETR ports is online. ETR-based clock synchronization is switched off if both ETR ports are offline.

Procedure

To set an ETR port online, set its sysfs `online` attribute to `1`. To set an ETR port offline, set its sysfs `online` attribute to `0`. Enter a command of this form:

```
# echo <flag> > /sys/devices/system/etr/etr<n>/online
```

where <*n*> identifies the port and is either `0` or `1`.

Example

To set ETR port `etr1` offline, enter:

```
# echo 0 > /sys/devices/system/etr/etr1/online
```

Enabling and disabling STP-based clock synchronization

Use the STP sysfs attribute `online` to enable or disable STP-based clock synchronization.

Procedure

To enable STP-based clock synchronization, set `/sys/devices/system/stp/online` to 1. To disable STP-based clock synchronization, set this attribute to `0`.

Example

To disable STP-based clock synchronization, enter:

```
# echo 0 > /sys/devices/system/stp/online
```

Chapter 27. Identifying the z Systems hardware

In installations with several z Systems mainframes, you might need to identify the particular hardware system on which a Linux instance is running.

Two attributes in `/sys/firmware/ocf` can help you to identify the hardware.

cpc_name
: contains the name that is assigned to the central processor complex (CPC). This name identifies the mainframe system on a Hardware Management Console (HMC).

hmc_network
: contains the name of the HMC network to which the mainframe system is connected.

The two attributes contain the empty string if the Linux instance runs as a guest of a hypervisor that does not support the operations command facility (OCF) communication parameters interface.

Use the **cat** command to read these attributes.

Example:

```
# cat /sys/firmware/ocf/cpc_name
Z05
# cat /sys/firmware/ocf/hmc_network
SNA00
```

Chapter 28. The diag288 watchdog device driver

The watchdog device driver provides Linux watchdog applications with access to the z/VM watchdog timer.

You can use the diag288 watchdog in these environments:

- Linux on z/VM
- Linux in LPAR mode as of z13s and z13 with the enhancements of February 2016.
- Linux as a KVM guest (see *Device Drivers, Features, and Commands on SUSE Linux Enterprise Server 12 SP3 as a KVM Guest*, SC34-2756)

The diag288 watchdog device driver provides the following features:

- Access to the watchdog timer on z Systems.
- An API for watchdog applications (see "External programming interfaces" on page 366).

Watchdog applications can be used to set up automated restart mechanisms for Linux on z Systems. Watchdog-based restart mechanisms are an alternative to a networked heartbeat with STONITH.

Watchdog applications that communicates directly with the z Systems firmware or with the z/VM control program (CP) do not require a third operating system to monitor a heartbeat.

What you should know about the diag288 watchdog device driver

The watchdog function comprises two components: a watchdog application that runs on the Linux instance being controlled and a watchdog timer outside the Linux instance.

While the Linux instance operates satisfactorily, the watchdog application reports a positive status to the watchdog timer at regular intervals. The watchdog application uses a device node to pass these status reports to the timer (Figure 63).

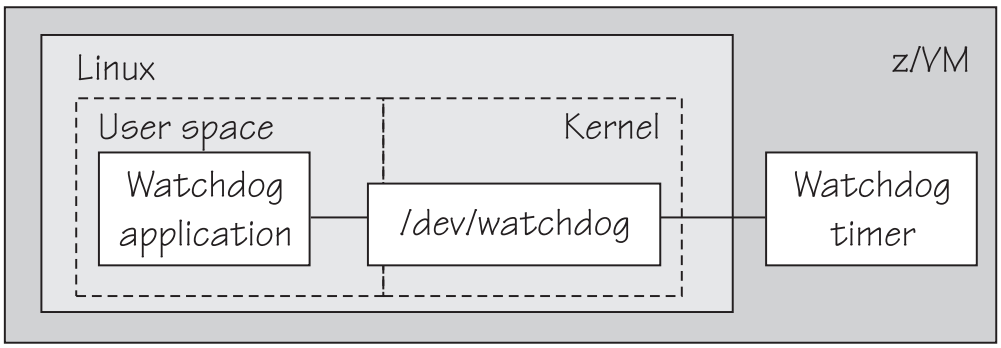

Figure 63. Watchdog application and timer

The watchdog application typically derives its status by monitoring critical network connections, file systems, and processes on the Linux instance. If a specified time elapses without a positive report being received by the watchdog

timer, the watchdog timer assumes that the Linux instance is in an error state. The watchdog timer then triggers a predefined action from CP against the Linux instance. For example, Linux might be shut down or rebooted, or a system dump might be initiated. For information about setting the default timer and performing other actions, see "External programming interfaces" on page 366.

Linux on z/VM only: Loading or saving a DCSS can take a long time during which the virtual machine does not respond, depending on the size of the DCSS. As a result, a watchdog might time out and restart the guest. You are advised not to use the watchdog in combination with loading or saving DCSSs.

See also the generic watchdog documentation in the Linux kernel source tree under `Documentation/watchdog`.

Loading and configuring the diag288 watchdog device driver

You configure the diag288 watchdog device driver when you load the module.

watchdog module parameter syntax

```
                                 ┌─ cmd="SYSTEM RESTART"─┐
►►─modprobe─diag288_wdt─┬──────────────────────────────┬──┬──────────────────────►
                        └─ cmd=<command>──────────────┘  └─ conceal=1──┘

                                   (1)
►──┬──────────────────────────────┬──────────────────────────────────────────►◄
   └─ nowayout=<nowayout_flag>──┘
```

Notes:

1 `cmd=` and `conceal=` apply only to Linux on z/VM and are ignored for Linux in LPAR mode.

where:

<command>

configures the shutdown action to be taken if Linux on z/VM fails. The default, "SYSTEM RESTART", configures the shutdown action that is specified for the `restart` shutdown trigger (see Chapter 7, "Shutdown actions," on page 83).

Any other specification dissociates the timeout action from the `restart` shutdown trigger. Instead, the specification is issued by CP and must adhere to these rules:

- It must be a single valid CP command
- It must not exceed 230 characters
- It must be enclosed by quotation marks if it contains any blanks or newline characters

The specification is converted from ASCII to uppercase EBCDIC.

For details about CP commands see *z/VM CP Commands and Utilities Reference*, SC24-6175.

On an running instance of Linux on z/VM, you can write to `/sys/module/diag288_wdt/parameters/cmd` to replace the command you specify when loading the module. Through this sysfs interface, you can also specify multiple commands to be issued, see Examples for more details.

The preferred method for configuring a timeout action other than a system restart is to configure a different shutdown action for the `restart` shutdown trigger.

`conceal=1`
enables the protected application environment where the guest is protected from unexpectedly entering CP READ. Do not enable the protected environment for guests with multiprocessor configurations. The protected application facility supports only virtual uniprocessor systems.

For details, see the "SET CONCEAL" section of *z/VM CP Commands and Utilities Reference*, SC24-6175.

<nowayout_flag>
determines what happens when the watchdog device node is closed by the watchdog application.

If the flag is set to 1 (default), the watchdog timer keeps running and triggers an action if no positive status report is received within the specified time interval. If the character "V" is written to the device and the flag is set to `0`, the z/VM watchdog timer is stopped and the Linux instance continues without the watchdog support.

Examples for Linux on z/VM

The following command loads the watchdog module and determines that, on failure, the Linux instance is to be IPLed from a device with devno 0xb1a0. The protected application environment is not enabled. The watchdog application can close the watchdog device node after writing "V" to it. As a result the watchdog timer becomes ineffective and does not IPL the guest.

```
# modprobe diag288_wdt cmd="ipl b1a0" nowayout=0
```

The following example shows how to specify multiple commands to be issued.

```
# /usr/bin/printf "<cmd1>\n<cmd2>\n<cmd3>" > /sys/module/diag288_wdt/parameters/cmd
```

where <*cmd1*>, <*cmd2*>, and <*cmd3*>are z/VM commands.

Use the **`printf`** version at `/usr/bin/printf`. The built-in **`printf`** command from bash might not process the newline characters as intended.

To verify that your commands have been accepted, issue: To verify that your commands have been accepted, issue:

```
# cat /sys/module/diag288_wdt/parameters/cmd
<cmd1>
<cmd2>
<cmd3>
```

Note: You cannot specify multiple commands as module parameters while loading the module.

Setting the timeout action

The timeout action for the diag288 watchdog device driver is defined by the `restart` shutdown trigger.

The default action is a **PSW restart** for Linux in LPAR mode and the CP **`system restart`** command for Linux on z/VM. You can change how Linux reacts to a **PSW restart** by changing the shutdown action for the `restart` shutdown trigger (see Chapter 7, "Shutdown actions," on page 83).

For Linux on z/VM, you can use the `diag288.cmd=` kernel parameter or the `cmd=` module parameter to directly specify a z/VM CP command to be issued, independent of the `restart` shutdown trigger.

External programming interfaces

There is an API for applications that work with the watchdog device driver.

Application programmers: This information is intended for programmers who want to write watchdog applications that work with the watchdog device driver.

For information about the API and the supported IOCTLs, see the `Documentation/watchdog/watchdog-api.txt` file in the Linux source tree.

The default watchdog timeout is 30 seconds, the minimum timeout that can be set through the IOCTL WDIOC_SETTIMEOUT is 15 seconds.

Chapter 29. HMC media device driver

You use the HMC media device driver to access files on removable media at a system that runs the Hardware Management Console (HMC).

Before you begin: You must log in to the HMC on the system with the removable media and assign the media to the LPAR.

As of System z10®, the HMC media device driver supports the following removable media:

- A DVD in the DVD drive of the HMC system
- A CD in the DVD drive of the HMC system
- USB-attached storage that is plugged into the HMC system

The most commonly used removable media at the HMC is a DVD.

The HMC media device driver uses the `/dev/hmcdrv` device node to support these capabilities:

- List the media contents with the `lshmc` command (see "lshmc - List media contents in the HMC media drive" on page 598).
- Mount the media contents as a file system with the `hmcdrvfs` command (see "hmcdrvfs - Mount a FUSE file system for remote access to media in the HMC media drive" on page 570).

Module parameters

You can set the cache size for the HMC media device driver.

Before you can work with the HMC media device driver and with the dependent **`lshmc`** and **`hmcdrvfs`** commands, you must load the `hmcdrv` kernel module.

hmcdrv module parameter syntax

```
                          ┌─ cachesize=534288 ─┐
►►──modprobe── hmcdrv──┤                    ├──────────────────────────────►◄
                          └─ cachesize=<size> ─┘
```

where <*size*> is the cache size in bytes. The specification must be a multiple of 2048. You can use the suffixes K for kilobytes, M for megabytes, or G for gigabytes. Specify `0` to not cache any media content. By default, the cache size is 534288 bytes (0.5 MB).

Loading the `hmcdrv` module creates a device node at `/dev/hmcdrv`.

Example

The following specifications are equivalent:

```
# modprobe hmcdrv cachesize=153600
```

```
# modprobe hmcdrv cachesize=150K
```

Working with the HMC media

You can list files on media that are inserted into the HMC system and you can mount the media content on the Linux file system.

- "Assigning the removable media of the HMC to an LPAR"
- "Listing files on the removable media at the HMC"
- "Mounting the content of the removable media at the HMC" on page 369

Assigning the removable media of the HMC to an LPAR

Use the HMC to assign the removable media to the LPAR where your Linux instance runs.

Before you begin

- You need access to the HMC, and you must be authorized to use the **Access Removable Media** task for the LPAR to which you want to assign the media.
- For Linux on z/VM, the z/VM guest virtual machine must have at least privilege class B.
- For Linux in LPAR mode, the LPAR activation profile must allow issuing SCLP requests.

About this task

You can list files on the removable media at the HMC without having to first mount the contents on the Linux file system.

Procedure

1. Insert the removable media into the HMC system.
2. Use the **Access Removable Media** task on your HMC to assign the removable media to the LPAR where your Linux instance runs.

   For Linux on z/VM, this is the LPAR where the z/VM hypervisor runs that provides the guest virtual machine to your Linux instance.

   For details, see the HMC documentation for the HMC at your installation.

Results

You can now access the removable media from your Linux instance.

Listing files on the removable media at the HMC

Use the **lshmc** command to list files on the removable media at the HMC.

Before you begin

Your Linux instance must have access to the removable media at the HMC (see "Assigning the removable media of the HMC to an LPAR" on page 368).

About this task

You can list files on the removable media at the HMC without having to first mount the contents on the Linux file system.

Procedure

Issue a command of this form:

```
# lshmc <filepath>
```

where <*filepath*> is an optional specification for a particular path and file. Path specifications are interpreted as relative to the root directory of the removable media. You can use the asterisk (*) and question mark (?) as wildcards. If you omit <*filepath*>, all files in the root directory of the media are listed.

Example: The following command lists all `.html` files in the `www` subdirectory of the media.

```
# lshmc www/*.html
```

For more information about the **`lshmc`** command, see "lshmc - List media contents in the HMC media drive" on page 598.

Mounting the content of the removable media at the HMC

Use the **`hmcdrvfs`** command to mount the content of the removable media at the HMC.

Before you begin

Your Linux instance must have access to the removable media of the HMC (see "Assigning the removable media of the HMC to an LPAR" on page 368).

About this task

You can mount the content of the removable media at the HMC in read-only mode on the Linux file system.

Procedure

1. Optional: Confirm that your are accessing the intended content by issuing the **`lshmc`** command.
2. Mount the media content by issuing a command of this form:

   ```
   # hmcdrvfs <mountpoint>
   ```

   where <*mountpoint*> is the mount point on the Linux file system.

   Example: The following command mounts the media content at `/mnt/hmc`:

```
# hmcdrvfs /mnt/hmc
```

Results

You can now access the files on the media in read-only mode through the Linux file system.

What to do next

When you no longer need access to the media content, unmount the media with the **fusermount** command.

Chapter 30. Data compression with GenWQE and zEDC Express

Generic Work Queue Engine (GenWQE) supports hardware-accelerated data compression and decompression through zEDC Express, a PCIe-attached Field Programmable Gate Array (FPGA) acceleration adapter.

zEDC Express is available for zEC12 and later IBM mainframes.

zEDC hardware-acceleration is available for both Linux and z/OS. For more information about zEDC on z/OS and about setting up zEDC Express, see *Reduce Storage Occupancy and Increase Operations Efficiency with IBM zEnterprise Data Compression*, SG24-8259. You can obtain this publication from the IBM Redbooks website at www.redbooks.ibm.com/abstracts/sg248259.html.

Features

GenWQE supports hardware-accelerated data compression and decompression with common standards.

- GenWQE implements the zlib API.
- GenWQE adheres to the following RFCs:
  - RFC 1950 (zlib)
  - RFC 1951 (deflate)
  - RFC 1952 (gzip)

  These standards ensure compatibility among different zlib implementations.
  - Data that is compressed with GenWQE can be decompressed through a zlib software library.
  - Data that is compressed through a software zlib software library can be decompressed with GenWQE.
- GenWQE supports the following PCIe FPGA acceleration hardware:
  - zEDC Express

What you should know about GenWQE

Learn about the GenWQE components, how to enable GenWQE accelerated zlib for user applications, and device representation in Linux.

The GenWQE accelerated zlib

The GenWQE accelerated zlib can replace a zlib software library.

For data compression and decompression tasks, SUSE Linux Enterprise Server 12 SP3 includes software libraries. The zlib library, which provides the zlib API, is one of the most commonly used libraries for data compression and decompression. For information about zlib, see www.zlib.net.

Because the GenWQE accelerated zlib offers the zlib API, applications can use it instead of the default zlib software library. The GenWQE hardware-accelerated zlib is designed to enhance performance by offloading tasks to a hardware accelerator.

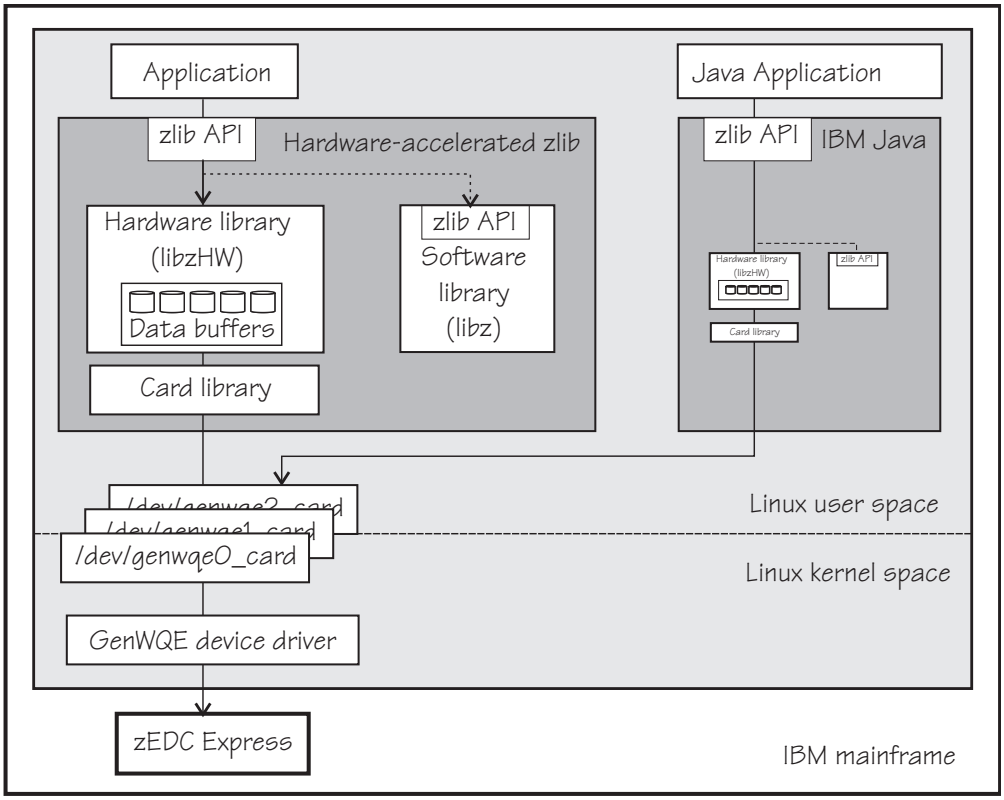

Figure 64. GenWQE accelerated zlib

Applications

You can make the user space components of the GenWQE hardware-accelerated zlib available to applications that request data compression functions through the zlib API. SUSE Linux Enterprise Server 12 SP3 provides these user space components with the `genwqe-zlib` RPM.

A second RPM, `genwqe-tools`, provides tools that use the GenWQE hardware-accelerated zlib.

IBM Java version 7.1 or later includes components of the GenWQE hardware-accelerated zlib. Through these components, it can directly address the GenWQE device nodes. With the required environment variables in place, it uses hardware-acceleration if it is available (see "GenWQE hardware-acceleration for IBM Java" on page 377).

Hardware-accelerated zlib

The hardware-accelerated zlib is a zlib implementation that acts as a wrapper for two included libraries:

libzHW
: a hardware library that prepares requests for processing by the hardware accelerator. The hardware library is intended to handle the bulk of the requests.

  This library also manages data buffers for optimized hardware compression.

libz a software implementation of the zlib interface. Because it provides the same interface as its wrapper library, it can handle any requests unmodified.

The hardware-accelerated zlib arbitrates between the two included libraries. It uses the software library as a backup if no hardware accelerator is available. It also evaluates the expected performance gain against the extra processing for channeling requests to the accelerator. For small or fragmented data, software processing might be advantageous, especially for decompression. The evaluation takes available resources, such as buffer space, into account.

Card library

The card library, `libcard`, mediates between the hardware-accelerated zlib library and the GenWQE device driver. It provides recovery features and can move jobs between available accelerators.

Device driver

The GenWQE device driver is the kernel part of GenWQE. It serializes requests to an accelerator in form of device driver control blocks (DDCBs), and it enables multi-process and multi-thread usage.

GenWQE device nodes

GenWQE user space components use device nodes to exchange data with the GenWQE device driver.

SUSE Linux Enterprise Server 12 SP3 automatically loads the GenWQE device driver module when it is required. It also creates a device node of the form `/dev/genwqe<n>_card` for each available virtual acceleration card. *<n>* is an index number that identifies an individual virtual card. Node `/dev/genwqe0_card` is assigned to the first card that is detected, `/dev/genwqe1_card` to the second card, and so on.

Do not directly use these device nodes. The nodes are intended to be used by the user space components of the GenWQE hardware-accelerated zlib and by IBM Java.

Virtual accelerators

Each physical accelerator card can provide up to 15 virtual cards. In PCIe terminology, these virtual cards are called virtual functions.

GenWQE accelerator cards, as detected by Linux on z Systems, are virtual cards. Which and how many cards are available to a particular Linux instance depends on the mainframe configuration and, if applicable, the hypervisor configuration.

As for most mainframe devices, availability can be enhanced by assigning virtual accelerator cards from different physical cards.

A degree of load distribution can be achieved by unevenly distributing accelerator cards among different Linux instances.

Tradeoff between best compression and speed

A minimum size of compressed data and fast compression are conflicting goals.

For hardware-accelerated compression with GenWQE, the compression ratio is roughly equivalent to **gzip --fast**.

Data that was compressed with GenWQE hardware-acceleration might have a different size from data that was compressed in software. The data compression standards are not violated by this difference. Despite possible differences in size of the compressed data, data that is compressed with GenWQE hardware-acceleration can be decompressed in software and vice versa.

Setting up GenWQE hardware acceleration

Install the GenWQE components and understand how environment variables can override default settings.

Installing the GenWQE hardware-accelerated zlib

Install the `genwqe-zlib and genwqe-tools` RPMs that are included in SUSE Linux Enterprise Server 12 SP3.

The `genwqe-zlib` RPM includes the user space components of the GenWQE hardware-accelerated zlib.

The `genwqe-tools` RPM provides the following tools:

- **genwqe_gzip** and **genwqe_gunzip**, which are GenWQE versions of **gzip** and **gunzip** (see "Examples for using GenWQE" on page 375).

  These tools can be used for most purposes, but they do not implement all of the more unusual options of their common code counterparts. See the man pages to find out which options are supported.
- **genwqe_echo**, a tool to confirm the availability of accelerator hardware through the GenWQE accelerated zlib. See "Confirming that the accelerator hardware can be reached" on page 378 for details.

Environment variables

You can set environment variables to control the GenWQE hardware-accelerated zlib.

The GenWQE hardware-accelerated zlib uses defaults that correspond to the following environment variable settings:

```
ZLIB_ACCELERATOR=GENWQE
ZLIB_CARD=-1
ZLIB_TRACE=0x0
ZLIB_DEFLATE_IMPL=0x41
ZLIB_INFLATE_IMPL=0x41
```

You can override these defaults by setting the following environment variables:

ZLIB_ACCELERATOR
: Sets the accelerator type. For zEDC Express, the type is `GENWQE`.

ZLIB_CARD
: `-1`, uses all accelerators that are available to the Linux instance. Failed requests are retried on alternative accelerators.

  You can specify the ID of a particular virtual accelerator card to be used. The ID is the index number that makes the nodes unique. All other cards are ignored, and no retry on alternative cards is performed if the specified card fails. Specify an ID only if you want to test a particular card.

`0` uses the first card that is found by the device driver. As for specifying an individual card, all other cards are ignored.

ZLIB_TRACE
Sets tracing bits:

0x1 General trace.

0x2 Hardware trace.

0x4 Software trace.

0x8 Trace summary at the end of a process.

Tracing requires extra processing and incurs a performance penalty. The least performance impact is to be expected from the trace summary. By default, tracing is off.

ZLIB_DEFLATE_IMPL
`0x01` and `0x41` enable hardware compression, where `0x41` adds an optimization setting. `0x00` forces software compression and is intended for experimentation, for example, for gathering performance data with and without hardware acceleration.

ZLIB_INFLATE_IMPL
`0x01` and `0x41` enable hardware decompression, where `0x41` adds an optimization setting. `0x00` forces software decompression and is intended for experimentation, for example, for gathering performance data with and without hardware acceleration.

You can find more details about the environment variables in the GenWQE wiki on GitHub at github.com/ibm-genwqe/genwqe-user/wiki/Environment Variables.

Examples for using GenWQE

You can use the GenWQE hardware-accelerated zlib through GenWQE tools.

Activating the GenWQE hardware-accelerated zlib for an application

Whether and how you can make an application use the GenWQE hardware-accelerated zlib depends on how the application links to `libz.so`.

Examine the application for links to `libz.so`, for example with the **ldd** tool.

- If the application does not link to `libz.so` or if it statically links to `libz.so`, it would require recompilation, and possibly code changes, to make acceleration through GenWQE possible.
- If an application dynamically links to `libz.so`, you might be able to redirect the library calls from the default implementation to the GenWQE hardware-accelerated zlib.

Some applications require zlib features that are not available from the GenWQE hardware-accelerated zlib. Such applications fail if a global redirect is put in place. The following technique redirects calls for the scope of a particular application.

Specify the LD_PRELOAD environment variable to load the GenWQE hardware-accelerated zlib. Set the variable with the start command for your application.

Example:

```
# LD_PRELOAD=/lib/s390x-linux-gnu/genwqe/libz.so.1 <application_start_cmd>
```

Compressing data with genwqe_gzip

GenWQE provides two tools, **genwqe_gzip** and **genwqe_gunzip** that can be used in place of the common code **gzip** and **gunzip** tools. The GenWQE versions of the tools use hardware acceleration if it is available.

Procedure

Run the **genwqe_gzip** command with the `-AGENWQE` parameter to compress a file.

```
# genwqe_gzip -AGENWQE <file>
```

The `-AGENWQE` parameter ensures that the correct, PCIe-attached, accelerator card is used. Also use this option when decompressing data with the **genwqe_gunzip** command. See the man pages for other options.

Running tar with GenWQE hardware-acceleration

You can make tar use **genwqe_gzip** in place of the common code **gzip**.

About this task

If called with the `z` option, the **tar** utility uses the first **gzip** tool in the search path, which is usually the common code version. By inserting the path to the GenWQE **gzip** tool at the beginning of the PATH variable, you can make the **tar** utility use hardware acceleration.

The path points to `/usr/lib64/genwqe/gzip` and `/usr/lib64/genwqe/gunzip`, which are symbolic links to **genwqe_gzip** and **genwqe_gunzip**.

The acceleration is most marked for a single large text file. The example that follows compresses a directory with the Linux source code.

Procedure

1. Run the **tar** command as usual to use software compression. To obtain performance data, specify the **tar** command as an argument to the **time** command.

```
# time tar cfz linux-src.sw.tar.gz linux-src
real 0m22.329s
user 0m22.147s
sys 0m0.849s
```

2. Run the **tar** command with an adjusted PATH variable to use GenWQE hardware acceleration. Again, use the **time** command to obtain performance data.

```
# time PATH=/usr/lib64/genwqe:$PATH \
tar cfz linux-src.hw.tar.gz linux-src
real 0m1.323s
user 0m0.242s
sys 0m1.023s
```

Results

In the example, the accelerated operation is significantly faster. The hardware-compressed data is slightly larger than the software-compressed version of the same data

GenWQE hardware-acceleration for IBM Java

IBM Java version 7.1 or later can use the GenWQE hardware-accelerated zlib.

To activate the GenWQE hardware-accelerated zlib for IBM Java, you must set environment parameters. See the documentation for your Java version to find out which settings are required.

Note: Any values that you set for the environment variables override the default settings for the GenWQE user space components (see "Environment variables" on page 374).

Exploring the GenWQE setup

You might want to ensure that your GenWQE setup works as intended.

- "Listing your GenWQE accelerator cards"
- "Checking the GenWQE device driver setup"
- "Confirming that the accelerator hardware can be reached" on page 378

Listing your GenWQE accelerator cards

Use the **lspci** command to list the available GenWQE accelerator cards.

Procedure

1. Issue the **lspci** command and look for GenWQE.

   Example:

   ```
   # lspci |grep GenWQE
   0002:00:00.0 Processing accelerators: IBM GenWQE Accelerator Adapter
   ```

2. Issue the **lspci** command with the verbose option to display details about a particular card.

   Example:

   ```
   # lspci -vs 0002:00:00.0
   0002:00:00.0 Processing accelerators: IBM GenWQE Accelerator Adapter
           Subsystem: IBM GenWQE Accelerator Adapter
           Physical Slot: 000000ff
           Flags: bus master, fast devsel, latency 0, IRQ 3
           Memory at 8002000000000000 (64-bit, prefetchable) [disabled] [size=128M]
           Capabilities: [50] MSI: Enable+ Count=1/1 Maskable- 64bit+
           Capabilities: [80] Express Endpoint, MSI 00
           Capabilities: [100] Alternative Routing-ID Interpretation (ARI)
           Kernel driver in use: genwqe
           Kernel modules: genwqe_card
   ```

Checking the GenWQE device driver setup

Perform these tasks if GenWQE does not work as expected.

Procedure

1. Confirm that the device driver is loaded.

```
# lsmod | grep genwqe
genwqe_card 88997 0
crc_itu_t 1910 1 genwqe_card
```

   If the `genwqe_card` module is not listed in the command output, load it with **modprobe**.

```
# modprobe genwqe_card
```

   The `genwqe_card` module does not have module parameters.

2. Confirm that GenWQE device nodes exist and that the nodes have the required permissions.

   The nodes must grant read and write permissions to all users, for example:

```
# ls -l /dev/genwqe*
crwrwrw 1 root root 249, 0 Jun 30 10:01 /dev/genwqe0_card
crwrwrw 1 root root 248, 0 Jun 30 10:01 /dev/genwqe1_card
```

   If the permissions are not `crwrwrw`, create a file `/etc/udev/rules.d/52-genwqedevices.rules` with this rule as its content:

```
KERNEL=="genwqe*", MODE="0666"
```

   The new rule takes effect next time the GenWQE device driver is loaded.

   Tip: Use the **chmod** command to temporarily set the permissions.

What to do next

You can find debug information in the Linux source tree at `/sys/kernel/debug/genwqe` and at `/sys/class/genwqe`.

Confirming that the accelerator hardware can be reached

The **genwqe_echo** command is similar to a **ping** command.

Before you begin

The **genwqe_echo** command is included in the `genwqe-tools` RPM (see "Installing the GenWQE hardware-accelerated zlib" on page 374).

Procedure

Issue a command of this form to confirm that you can reach the accelerator hardware.

```
# genwqe_echo -AGENWQE -C <n> -c <m>
```

In the command, *<n>* is the index number of the card and *<m>* is a positive integer that specifies how many requests are sent to the card. The `-AGENWQE` parameter ensures that the correct, PCIe-attached, accelerator card is used.

Example: The following command sends four requests to the card with device node `/dev/genwqe1_card`:

```
# genwqe_echo -AGENWQE -C 1 -c 4
1 x 33 bytes from UNIT #1: echo_req time=37.0 usec
1 x 33 bytes from UNIT #1: echo_req time=19.0 usec
1 x 33 bytes from UNIT #1: echo_req time=23.0 usec
1 x 33 bytes from UNIT #1: echo_req time=18.0 usec
--- UNIT #1 echo statistics ---
4 packets transmitted, 4 received, 0 lost, 0% packet loss
```

See the **genwqe_echo** man page for other command options.

External programming interfaces

The GenWQE hardware-accelerated zlib implements a large subset of the original software zlib.

For information about programming against the GenWQE hardware-accelerated zlib, see the section about implemented zlib functions in *Accelerated Data Compressing using the GenWQE Linux Driver and Corsa FPGA PCIe card*.

To obtain this document, go to the developerWorks website at www.ibm.com/developerworks/community/files/app and search for "`genwqe`".

Part 6. z/VM virtual server integration

These device drivers and features help you to effectively run and manage a z/VM-based virtual Linux server farm.

Newest version

You can find the newest version of this publication on IBM Knowledge Center at www.ibm.com/support/knowledgecenter/linuxonibm/liaaf/lnz_r_suse.html

Restrictions

For prerequisites and restrictions see the z Systems architecture specific information in the SUSE Linux Enterprise Server 12 SP3 release notes at www.suse.com/releasenotes

Chapter 31. z/VM concepts

The z/VM performance monitoring and cooperative memory management concepts help you to understand how the different components interact with Linux.

Performance monitoring for z/VM guest virtual machines

You can monitor the performance of z/VM guest virtual machines and their guest operating systems with performance monitoring tools on z/VM or on Linux.

These tools can be your own, IBM tools such as the Performance Toolkit for VM, or third-party tools. The guests being monitored require agents that write monitor data.

Monitoring on z/VM

z/VM monitoring tools must read performance data. For monitoring Linux instances, this data is APPLDATA monitor records.

Linux instances must write these records for the tool to read, as shown in Figure 65.

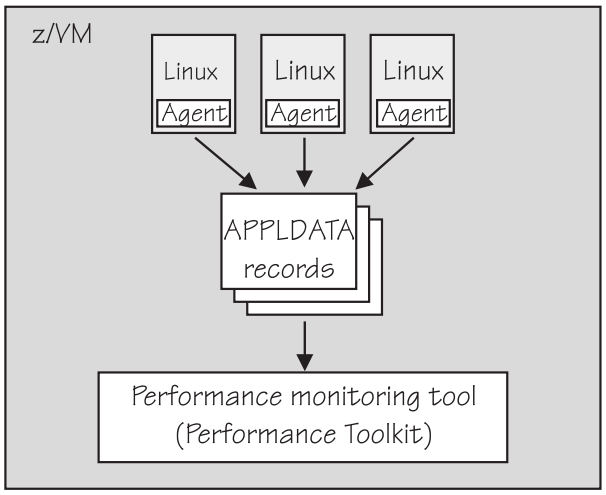

Figure 65. Linux instances write APPLDATA records for performance monitoring tools

Both user space applications and the Linux kernel can write performance data to APPLDATA records. Applications use the monwriter device driver to write APPLDATA records. The Linux kernel can be configured to collect system level data such as memory, CPU usage, and network-related data, and write it to data records.

For file system size, data there is a command, **mon_fsstatd**. This user space tool uses the monwriter device driver to write file system size information as defined records.

For process data, there is a command, **mon_procd**. This user space tool uses the monwriter device driver to write system information as defined records.

In summary, SUSE Linux Enterprise Server 12 SP3 for z Systems supports writing and collecting performance data as follows:

- The Linux kernel can write z/VM monitor data for Linux instances, see Chapter 32, "Writing kernel APPLDATA records," on page 387.
- Linux applications that run on z/VM guests can write z/VM monitor data, see Chapter 33, "Writing z/VM monitor records," on page 393.
- You can collect monitor file system size information, see "mon_fsstatd – Monitor z/VM guest file system size" on page 623.
- You can collect system information about up to 100 concurrently running processes, see "mon_procd – Monitor Linux on z/VM" on page 628.

Monitoring on Linux

A Linux instance can read the monitor data by using the monreader device driver.

Figure 66 illustrates a Linux instance that is set up to read the monitor data. You can use an existing monitoring tool or write your own software.

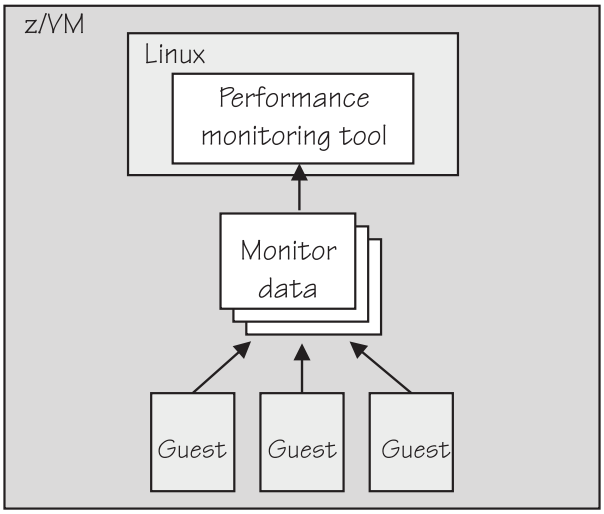

Figure 66. Performance monitoring using monitor DCSS data

In summary, Linux on z Systems supports reading performance data in the form of read access to z/VM monitor data for Linux instances. See Chapter 34, "Reading z/VM monitor records," on page 397 for more details.

Further information

Several z/VM publications include information about monitoring.

- See *z/VM Getting Started with Linux on System z*, SC24-6194, the chapter on monitoring performance for information about using the CP Monitor and the Performance Toolkit for VM.
- See *z/VM Saved Segments Planning and Administration*, SC24-6229 for general information about DCSSs (z/VM keeps monitor records in a DCSS).
- See *z/VM Performance*, SC24-6208 for information about creating a monitor DCSS.
- See *z/VM CP Commands and Utilities Reference*, SC24-6175 for information on the CP commands that are used in the context of DCSSs and for controlling the z/VM monitor system service.
- For the layout of the monitor records, visit

www.ibm.com/vm/pubs/ctlblk.html

and see Chapter 32, “Writing kernel APPLDATA records,” on page 387.

- For more information about performance monitoring on z/VM, visit www.ibm.com/vm/perf

Cooperative memory management background

Cooperative memory management (CMM, or "cmm1") dynamically adjusts the memory available to Linux.

For information about setting up CMM, see Chapter 40, “Cooperative memory management,” on page 433.

In a virtualized environment it is common practice to give the virtual machines more memory than is actually available to the hypervisor. Linux tends to use all of its available memory. As a result, the hypervisor (z/VM) might start swapping.

To avoid excessive z/VM swapping, the memory available to Linux can be reduced. CMM allocates pages to page pools that make the pages unusable to Linux. There are two such page pools as shown in Figure 67.

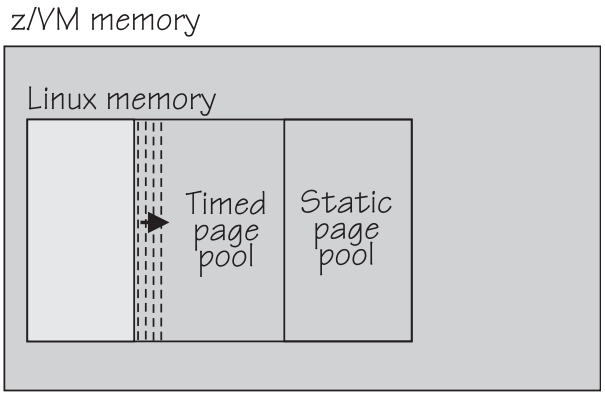

Figure 67. Page pools

There are two page pools:

A static page pool
The page pool is controlled by a resource manager that changes the pool size at intervals according to guest activity and overall memory usage on z/VM (see Figure 68 on page 386).

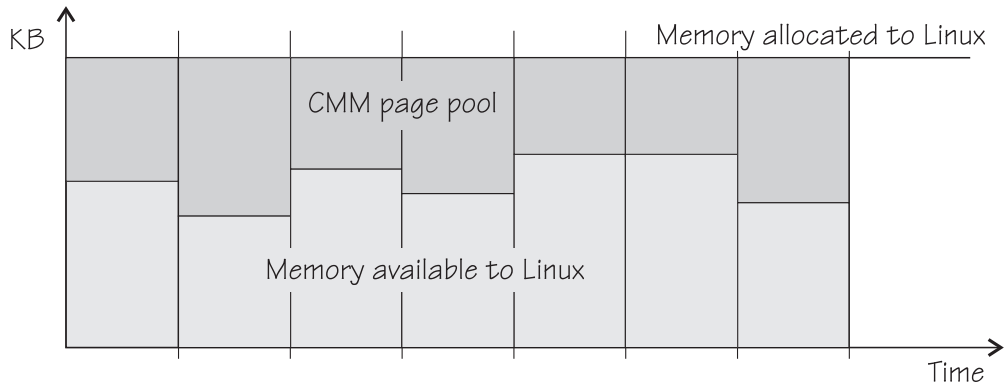

Figure 68. Static page pool. The size of the pool is static during an interval.

A timed page pool

Pages are released from this pool at a speed that is set in the *release rate* (see Figure 69). According to guest activity and overall memory usage on z/VM, a resource manager adds pages at intervals. If no pages are added and the release rate is not zero, the pool empties.

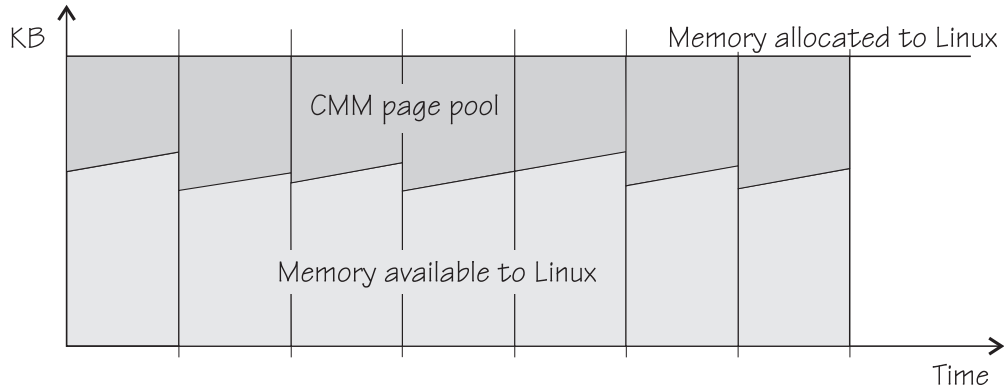

Figure 69. Timed page pool. Pages are freed at a set release rate.

The external resource manager that controls the pools can be the z/VM resource monitor (VMRM) or a third party systems management tool.

VMRM controls the pools over a message interface. Setting up the external resource manager is beyond the scope of this information. For more details, see the chapter on VMRM in *z/VM Performance*, SC24-6208.

Third party tools can provide a Linux deamon that receives commands for the memory allocation through TCP/IP. The deamon, in turn, uses the procfs-based interface. You can use the procfs interface to read the pool sizes. These values are useful diagnostic data.

Linux guest relocation

Information about guest relocations is stored in the s390 debug feature (s390dbf).

You can access this information in a kernel dump or from a running Linux instance. For more information, see *Linux on z Systems Troubleshooting*, SC34-2612.

Chapter 32. Writing kernel APPLDATA records

z/VM is a convenient point for collecting z/VM guest performance data and statistics for an entire server farm. Linux instances can export such data to z/VM by using APPLDATA monitor records.

z/VM regularly collects these records. The records are then available to z/VM performance monitoring tools.

A virtual CPU timer on the Linux instance to be monitored controls when data is collected. The timer accounts for only busy time to avoid unnecessarily waking up an idle guest. The APPLDATA record support comprises several modules. A base module provides an intra-kernel interface and the timer function. The intra-kernel interface is used by *data gathering modules* that collect actual data and determine the layout of a corresponding APPLDATA monitor record (see "APPLDATA monitor record layout" on page 389).

For an overview of performance monitoring support, see "Performance monitoring for z/VM guest virtual machines" on page 383.

Setting up the APPLDATA record support

You must enable your z/VM guest virtual machine for data gathering and load the APPLDATA record support modules.

Procedure

1. On z/VM, ensure that the user directory of the guest virtual machine includes the option APPLMON.
2. On Linux, use the **modprobe** command to load any required modules.

APPLDATA record support module parameter syntax

```
►►─modprobe──┬─ appldata_mem──────┬──────────────────────────────────►◄
             ├─ appldata_os───────┤
             └─ appldata_net_sum──┘
```

where appldata_mem, appldata_os, and appldata_net_sum are the modules for gathering memory-related data, operating system-related data, and network-related data.

See the **modprobe** man page for command details.

Generating APPLDATA monitor records

You can set the timer interval and enable or disable data collection.

APPLDATA monitor records are produced if both a particular data-gathering module and the monitoring support in general are enabled. You control the monitor stream support through the procfs.

Enabling or disabling the support

Use the procfs `timer` attribute to enable or disable the monitoring support.

Procedure

To read the current setting, issue:

```
# cat /proc/sys/appldata/timer
```

To enable the monitoring support, issue:

```
# echo 1 > /proc/sys/appldata/timer
```

To disable the monitoring support, issue:

```
# echo 0 > /proc/sys/appldata/timer
```

Activating or deactivating individual data-gathering modules

Each data-gathering module has a procfs entry that contains a value `1` if the module is active and `0` if the module is inactive.

About this task

The following procfs entries control the data-gathering modules:

`/proc/sys/appldata/mem` for the memory data-gathering module

`/proc/sys/appldata/os` for the CPU data-gathering module

`/proc/sys/appldata/net_sum` for the net data-gathering module

To check whether a module is active look at the content of the corresponding procfs entry.

Procedure

To activate a data-gathering module write `1` to the corresponding procfs entry. To deactivate a data-gathering module write `0` to the corresponding procfs entry.

Issue a command of this form:

```
# echo <flag> > /proc/sys/appldata/<data_type>
```

where <*data_type*> is one of mem, os, or net_sum.

Note: An active data-gathering module produces APPLDATA monitor records only if the monitoring support is enabled (see “Enabling or disabling the support”).

Example

To find out whether memory data-gathering is active, issue:

```
# cat /proc/sys/appldata/mem
0
```

In the example, memory data-gathering is off. To activate memory data-gathering, issue:

```
# echo 1 > /proc/sys/appldata/mem
```

To deactivate the memory data-gathering module, issue:

```
# echo 0 > /proc/sys/appldata/mem
```

Setting the sampling interval

You can set the time that lapses between consecutive data samples.

About this task

The time that you set is measured by the virtual CPU timer. Because the virtual timer slows down as the guest idles, the sampling interval in real time can be considerably longer than the value you set.

The value in `/proc/sys/appldata/interval` is the sample interval in milliseconds. The default sample interval is 10 000 ms.

Procedure

To read the current value, issue:

```
# cat /proc/sys/appldata/interval
```

To set the sample interval to a different value, write the new value (in milliseconds) to `/proc/sys/appldata/interval`. Issue a command of this form:

```
# echo <interval> > /proc/sys/appldata/interval
```

where <*interval*> is the new sample interval in milliseconds. The specification must be in the range 1 - 2147483647, where 2,147,483,647 = $2^{31} - 1$.

Example

To set the sampling interval to 20 s (20000 ms), issue:

```
# echo 20000 > /proc/sys/appldata/interval
```

APPLDATA monitor record layout

Each of the data gathering modules writes a different type of record.

- Memory data (see Table 49 on page 390)
- Processor data (see Table 50 on page 390)
- Networking (see Table 51 on page 391)

z/VM can identify the records by their unique product ID. The product ID is an EBCDIC string of this form: "LINUXKRNL<*record ID*>260100". The <*record ID*> is treated as a byte value, not a string.

The records contain data of the following types:

u32 unsigned 4 byte integer.

u64 unsigned 8 byte integer.

Table 49. APPLDATA_MEM_DATA record (Record ID 0x01)

Offset (Decimal)	Offset (Hex)	Type	Name	Description
0	0x0	u64	timestamp	TOD time stamp that is generated on the Linux side after record update
8	0x8	u32	sync_count_1	After z/VM collected the record data, sync_count_1 and sync_count_2 must be the same. Otherwise, the record was updated on the Linux side while z/VM was collecting the data. As a result, the data might be inconsistent.
12	0xC	u32	sync_count_2	See sync_count_1.
16	0x10	u64	pgpgin	Data that was read from disk (in KB)
24	0x18	u64	pgpgout	Data that was written to disk (in KB)
32	0x20	u64	pswpin	Pages that were swapped in
40	0x28	u64	pswpout	Pages that were swapped out
48	0x30	u64	sharedram	Shared RAM in KB, set to 0
56	0x38	u64	totalram	Total usable main memory size in KB
64	0x40	u64	freeram	Available memory size in KB
72	0x48	u64	totalhigh	Total high memory size in KB
80	0x50	u64	freehigh	Available high memory size in KB
88	0x58	u64	bufferram	Memory that was reserved for buffers, free cache in KB
96	0x60	u64	cached	Size of used cache, without buffers in KB
104	0x68	u64	totalswap	Total swap space size in KB
112	0x70	u64	freeswap	Free swap space in KB
120	0x78	u64	pgalloc	Page allocations
128	0x80	u64	pgfault	Page faults (major+minor)
136	0x88	u64	pgmajfault	Page faults (major only)

Table 50. APPLDATA_OS_DATA record (Record ID 0x02)

Offset (Decimal)	Offset (Hex)	Type (size)	Name	Description
0	0x0	u64	timestamp	TOD time stamp that is generated on the Linux side after record update
8	0x8	u32	sync_count_1	After z/VM collected the record data, sync_count_1 and sync_count_2 must be the same. Otherwise, the record was updated on the Linux side while z/VM was collecting the data. As a result, the data might be inconsistent.
12	0xC	u32	sync_count_2	See sync_count_1.
16	0x10	u32	nr_cpus	Number of virtual CPUs.

Table 50. APPLDATA_OS_DATA record (Record ID 0x02) (continued)

Offset (Decimal)	Offset (Hex)	Type (size)	Name	Description
20	0x14	u32	per_cpu_size	Size of the per_cpu_data for each CPU (= 36).
24	0x18	u32	cpu_offset	Offset of the first per_cpu_data (= 52).
28	0x1C	u32	nr_running	Number of runnable threads.
32	0x20	u32	nr_threads	Number of threads.
36	0x24	3 × u32	avenrun[3]	Average number of running processes during the last 1 (1st value), 5 (2nd value) and 15 (3rd value) minutes. These values are "fake fix-point", each value is composed of a 10-bit integer and an 11-bit fractional part. See note 1 at the end of this table.
48	0x30	u32	nr_iowait	Number of blocked threads (waiting for I/O).
52	0x34	See note 2.	per_cpu_data	Time spent in user, kernel, idle, nice, etc for every CPU. See note 3 at the end of this table.
52	0x34	u32	per_cpu_user	Timer ticks that were spent in user mode.
56	0x38	u32	per_cpu_nice	Timer ticks that were spent with modified priority.
60	0x3C	u32	per_cpu_system	Timer ticks that were spent in kernel mode.
64	0x40	u32	per_cpu_idle	Timer ticks that were spent in idle mode.
68	0x44	u32	per_cpu_irq	Timer ticks that were spent in interrupts.
72	0x48	u32	per_cpu_softirq	Timer ticks that were spent in softirqs.
76	0x4C	u32	per_cpu_iowait	Timer ticks that were spent while waiting for I/O.
80	0x50	u32	per_cpu_steal	Timer ticks "stolen" by the hypervisor.
84	0x54	u32	cpu_id	The number of this CPU.

Note:

1. The following C-Macros are used inside Linux to transform these into values with two decimal places:

```
#define LOAD_INT(x) ((x) >> 11)
#define LOAD_FRAC(x) LOAD_INT(((x) & ((1 << 11) - 1)) * 100)
```

2. nr_cpus * per_cpu_size
3. per_cpu_user through cpu_id are repeated for each CPU

Table 51. APPLDATA_NET_SUM_DATA record (Record ID 0x03)

Offset (Decimal)	Offset (Hex)	Type	Name	Description
0	0x0	u64	timestamp	TOD time stamp that is generated on the Linux side after record update

Table 51. APPLDATA_NET_SUM_DATA record (Record ID 0x03) (continued)

Offset (Decimal)	Offset (Hex)	Type	Name	Description
8	0x8	u32	sync_count_1	After z/VM collected the record data, sync_count_1 and sync_count_2 must be the same. Otherwise, the record was updated on the Linux side while z/VM was collecting the data. As a result, the data might be inconsistent.
12	0xC	u32	sync_count_2	See sync_count_1
16	0x10	u32	nr_interfaces	Number of interfaces being monitored
20	0x14	u32	padding	Unused. The next value is 64-bit aligned, so these 4 byte would be padded out by compiler
24	0x18	u64	rx_packets	Total packets that were received
32	0x20	u64	tx_packets	Total packets that were transmitted
40	0x28	u64	rx_bytes	Total bytes that were received
48	0x30	u64	tx_bytes	Total bytes that were transmitted
56	0x38	u64	rx_errors	Number of bad packets that were received
64	0x40	u64	tx_errors	Number of packet transmit problems
72	0x48	u64	rx_dropped	Number of incoming packets that were dropped because of insufficient space in Linux buffers
80	0x50	u64	tx_dropped	Number of outgoing packets that were dropped because of insufficient space in Linux buffers
88	0x58	u64	collisions	Number of collisions while transmitting

Programming interfaces

The monitor stream support base module exports two functions.

- appldata_register_ops() to register data-gathering modules
- appldata_unregister_ops() to undo the registration of data-gathering modules

Both functions receive a pointer to a struct appldata_ops as parameter. Additional data-gathering modules that want to plug into the base module must provide this data structure. You can find the definition of the structure and the functions in `arch/s390/appldata/appldata.h` in the Linux source tree.

See "APPLDATA monitor record layout" on page 389 for an example of APPLDATA data records that are to be sent to z/VM.

Tip: Include the timestamp, sync_count_1, and sync_count_2 fields at the beginning of the record as shown for the existing APPLDATA record formats.

Chapter 33. Writing z/VM monitor records

Applications can use the monitor stream application device driver to write z/VM monitor APPLDATA records to the z/VM *MONITOR stream.

For an overview of performance monitoring support, see "Performance monitoring for z/VM guest virtual machines" on page 383.

The monitor stream application device driver interacts with the z/VM monitor APPLDATA facilities for performance monitoring. A better understanding of these z/VM facilities might help when you are using this device driver. See *z/VM Performance*, SC24-6208 for information about monitor APPLDATA.

The monitor stream application device driver provides the following functions:

- An interface to the z/VM monitor stream.
- A means of writing z/VM monitor APPLDATA records.

Setting up the z/VM *MONITOR record writer device driver

You must load the monwriter module on Linux and set up your guest virtual machine for monitor records on z/VM.

Loading the module

You can configure the monitor stream application device driver when you are loading the device driver module, monwriter.

Monitor stream application device driver module parameter syntax

```
                          ┌─ max_bufs=255 ──────┐
►►─modprobe── monwriter──┤                     ├──────────────────────────►◄
                          └─ max_bufs=<numbufs>─┘
```

where <*numbufs*> is the maximum number of monitor sample and configuration data buffers that can exist in the Linux instance at one time. The default is 255.

Example

To load the monwriter module and set the maximum number of buffers to 400, use the following command:

```
# modprobe monwriter max_bufs=400
```

Setting up the z/VM guest virtual machine

You must enable your z/VM guest virtual machine to write monitor records and configure the z/VM system to collect these records.

Procedure

Perform these steps:

1. Set this option in the z/VM user directory entry of the virtual machine in which the application that uses this device driver is to run:
   - OPTION APPLMON
2. Issue the following CP commands to have CP collect the respective types of monitor data:
   - `MONITOR SAMPLE ENABLE APPLDATA ALL`
   - `MONITOR EVENT ENABLE APPLDATA ALL`

   You can log in to the z/VM console to issue the CP commands. These commands must be preceded with #CP. Alternatively, you can use the **vmcp** command for issuing CP commands from your Linux instance.

   See *z/VM CP Commands and Utilities Reference*, SC24-6175 for information about the CP MONITOR command.

Working with the z/VM *MONITOR record writer

The monitor stream application device driver uses the z/VM CP instruction DIAG X'DC' to write to the z/VM monitor stream. Monitor data must be preceded by a data structure, monwrite_hdr.

See *z/VM CP Programming Services*, SC24-6179 for more information about the DIAG X'DC' instruction and the different monitor record types (sample, config, event).

The application writes monitor data by passing a monwrite_hdr structure that is followed by monitor data. The only exception is the STOP function, which requires no monitor data. The monwrite_hdr structure, as described in monwriter.h, is filled in by the application. The structure includes the DIAG X'DC' function to be performed, the product identifier, the header length, and the data length.

All records that are written to the z/VM monitor stream begin with a product identifier. This device driver uses the product ID. The product ID is a 16-byte structure of the form ppppppffnvvrrmm, where:

ppppppp
: is a fixed ASCII string, for example, LNXAPPL.

ff
: is the application number (hexadecimal number). This number can be chosen by the application. You can reduce the chance of conflicts with other applications, by requesting an application number from the IBM z/VM Performance team at

  `www.ibm.com/vm/perf`

n
: is the record number as specified by the application

vv, rr, and mm
: can also be specified by the application. A possible use is to specify version, release, and modification level information, allowing changes to a certain record number when the layout is changed, without changing the record number itself.

The first 7 bytes of the structure (LNXAPPL) are filled in by the device driver when it writes the monitor data record to the CP buffer. The last 9 bytes contain information that is supplied by the application on the `write()` call when writing the data.

The monwrite_hdr structure that must be written before any monitor record data is defined as follows:

```
/* the header the app uses in its write() data */
struct monwrite_hdr {
 unsigned char mon_function;
 unsigned short applid;
 unsigned char record_num;
 unsigned short version;
 unsigned short release;
 unsigned short mod_level;
 unsigned short datalen;
 unsigned char hdrlen;
}__attribute__((packed));
```

The following function code values are defined:

```
/* mon_function values */
#define MONWRITE_START_INTERVAL 0x00 /* start interval recording */
#define MONWRITE_STOP_INTERVAL  0x01 /* stop interval or config recording */
#define MONWRITE_GEN_EVENT      0x02 /* generate event record */
#define MONWRITE_START_CONFIG   0x03 /* start configuration recording */
```

Writing data and stopping data writing

Applications use the `open()`, `write()`, and `close()` calls to work with the z/VM monitor stream.

Before an application can write monitor records, it must issue `open()` to open the device driver. Then, the application must issue `write()` calls to start or stop the collection of monitor data and to write any monitor records to buffers that CP can access.

When the application has finished writing monitor data, it must issue `close()` to close the device driver.

Using the monwrite_hdr structure

The structure monwrite_hdr is used to pass DIAG x'DC' functions and the application-defined product information to the device driver on `write()` calls.

When the application calls `write()`, the data it is writing consists of one or more monwrite_hdr structures. Each structure is followed by monitor data. The only exception is the STOP function, which is not followed by data.

The application can write to one or more monitor buffers. A new buffer is created by the device driver for each record with a unique product identifier. To write new data to an existing buffer, an identical monwrite_hdr structure must precede the new data on the `write()` call.

The monwrite_hdr structure also includes a field for the header length, which is useful for calculating the data offset from the beginning of the header. There is also a field for the data length, which is the length of any monitor data that follows. See `/usr/include/asm-s390/monwriter.h` for the definition of the monwrite_hdr structure.

Chapter 34. Reading z/VM monitor records

Monitoring software on Linux can access z/VM guest data through the z/VM *MONITOR record reader device driver.

z/VM uses the z/VM monitor system service (*MONITOR) to collect monitor records from agents on its guests. z/VM writes the records to a discontiguous saved segment (DCSS). The z/VM *MONITOR record reader device driver uses IUCV to connect to *MONITOR and accesses the DCSS as a character device.

For an overview of performance monitoring support, see “Performance monitoring for z/VM guest virtual machines” on page 383.

The z/VM *MONITOR record reader device driver supports the following devices and functions:

- Read access to the z/VM *MONITOR DCSS.
- Reading *MONITOR records for z/VM.
- Access to *MONITOR records as described on
  `www.ibm.com/vm/pubs/ctlblk.html`
- Access to the kernel APPLDATA records from the Linux monitor stream (see Chapter 32, “Writing kernel APPLDATA records,” on page 387).

What you should know about the z/VM *MONITOR record reader device driver

The data that is collected by *MONITOR depends on the setup of the monitor stream service.

The z/VM *MONITOR record reader device driver only reads data from the monitor DCSS; it does not control the system service.

z/VM supports only one monitor DCSS. All monitoring software that requires monitor records from z/VM uses the same DCSS to read *MONITOR data. Usually, a DCSS called "MONDCSS" is already defined and used by existing monitoring software.

If a monitor DCSS is already defined, you must use it. To find out whether a monitor DCSS exists, issue the following CP command from a z/VM guest virtual machine with privilege class E:

```
q monitor
```

The command output also shows the name of the DCSS.

Device node

SUSE Linux Enterprise Server 12 SP3 creates a device node, `/dev/monreader`, that you can use to access the monitor DCSS.

Further information

- See *z/VM Saved Segments Planning and Administration*, SC24-6229 for general information about DCSSs.
- See *z/VM Performance*, SC24-6208 for information about creating a monitor DCSS.
- See *z/VM CP Commands and Utilities Reference*, SC24-6175 for information about the CP commands that are used in the context of DCSSs and for controlling the z/VM monitor system service.
- For the layout of the monitor records, go to www.ibm.com/vm/pubs/ctlblk.html and click the link to the monitor record format for your z/VM version. Also, see Chapter 32, "Writing kernel APPLDATA records," on page 387.

Setting up the z/VM *MONITOR record reader device driver

You must set up Linux and the z/VM guest virtual machine for accessing an existing monitor DCSS with the z/VM *MONITOR record reader device driver.

Before you begin

Some of the CP commands you use for setting up the z/VM *MONITOR record reader device driver require class E authorization.

Setting up the monitor system service and the monitor DCSS on z/VM is beyond the scope of this information. See "What you should know about the z/VM *MONITOR record reader device driver" on page 397 for documentation about the monitor system service, DCSS, and related CP commands.

Providing the required user directory statements

The z/VM guest virtual machine where your Linux instance is to run must be permitted to establish an IUCV connection to the z/VM *MONITOR system service.

Procedure

Ensure that the guest entry in the user directory includes the following statement:

```
IUCV *MONITOR
```

If the DCSS is restricted, you also need this statement:

```
NAMESAVE <dcss>
```

where *<dcss>* is the name of the DCSS that is used for the monitor records. You can find out the name of an existing monitor DCSS by issuing the following CP command from a z/VM guest virtual machine with privilege class E:

```
q monitor
```

Assuring that the DCSS is addressable for your Linux instance

The DCSS address range must not overlap with the storage of you z/VM guest virtual machine.

Procedure

To find out the start and end address of the DCSS, issue the following CP command from a z/VM guest virtual machine with privilege class E:

```
q nss map
```

The output gives you the start and end addresses of all defined DCSSs in units of 4-kilobyte pages. For example:

```
00: FILE FILENAME FILETYPE MINSIZE BEGPAG ENDPAG TYPE CL #USERS PARMREGS VMGROUP
...
00: 0011 MONDCSS  CPDCSS   N/A     09000  097FF  SC   R   00003 N/A      N/A
...
```

What to do next

If the DCSS overlaps with the guest storage, follow the procedure in "Avoiding overlaps with your guest storage" on page 415.

Specifying the monitor DCSS name

Specify the DCSS name as a module parameter when you load the device driver module.

About this task

By default, the z/VM *MONITOR record reader device driver assumes that the monitor DCSS on z/VM is called MONDCSS. If you want to use a different DCSS name, you must specify it.

Load the monitor read support module with **modprobe** to assure that any other required modules are also loaded. You need IUCV support if you want to use the monitor read support.

monitor stream support module parameter syntax

```
►►──modprobe──monreader──┬─mondcss=MONDCSS─┬──────────────────────────────►◄
                         └─mondcss=<dcss>──┘
```

where <*dcss*> is the name of the DCSS that z/VM uses for the monitor records. The value is automatically converted to uppercase.

Example

To load the monitor read support module and specify MYDCSS as the DCSS issue:

```
modprobe monreader mondcss=mydcss
```

Working with the z/VM *MONITOR record reader support

You can open the z/VM *MONITOR record character device to read records from it.

This section describes how to work with the monitor read support.

- "Opening and closing the character device"
- "Reading monitor records"

Opening and closing the character device

Only one user can open the character device at any one time. Once you have opened the device, you must close it to make it accessible to other users.

About this task

The open function can fail (return a negative value) with one of the following values for errno:

EBUSY
The device has already been opened by another user.

EIO No IUCV connection to the z/VM MONITOR system service could be established. An error message with an IPUSER SEVER code is printed into syslog. See *z/VM Performance*, SC24-6208 for details about the codes.

Once the device is opened, incoming messages are accepted and account for the message limit. If you keep the device open indefinitely, expect to eventually reach the message limit (with error code EOVERFLOW).

Reading monitor records

You can either read in non-blocking mode with polling, or you can read in blocking mode without polling.

About this task

Reading from the device provides a 12-byte monitor control element (MCE), followed by a set of one or more contiguous monitor records (similar to the output of the CMS utility MONWRITE without the 4 K control blocks). The MCE contains information about:

- The type of the following record set (sample/event data)
- The monitor domains contained within it
- The start and end address of the record set in the monitor DCSS

The start and end address can be used to determine the size of the record set. The end address is the address of the last byte of data. The start address is needed to handle "end-of-frame" records correctly (domain 1, record 13), that is, it can be used to determine the record start offset relative to a 4 K page (frame) boundary.

See "Appendix A: *MONITOR" in *z/VM Performance*, SC24-6208 for a description of the monitor control element layout. The layout of the monitor records can be found on

```
www.ibm.com/vm/pubs/ctlblk.html
```

The layout of the data stream that is provided by the monreader device is as follows:

```
...
<0 byte read>
<first MCE>                \
<first set of records>    |...
...                              |- data set
<last MCE>                |
<last set of records>   /
<0 byte read>
...
```

There may be more than one combination of MCE and a corresponding record set within one data set. The end of each data set is indicated by a successful read with a return value of 0 (0 byte read). Received data is not to be considered valid unless a complete record set is read successfully, including the closing 0-Byte read. You are advised to always read the complete set into a user space buffer before processing the data.

When designing a buffer, allow for record sizes up to the size of the entire monitor DCSS, or use dynamic memory allocation. The size of the monitor DCSS will be printed into syslog after loading the module. You can also use the (Class E privileged) CP command **Q NSS MAP** to list all available segments and information about them (see "Assuring that the DCSS is addressable for your Linux instance" on page 398).

Error conditions are indicated by returning a negative value for the number of bytes read. For an error condition, the errno variable can be:

EIO
: Reply failed. All data that was read since the last successful read with 0 size is not valid. Data is missing. The application must decide whether to continue reading subsequent data or to exit.

EFAULT
: Copy to user failed. All data that was read since the last successful read with 0 size is not valid. Data is missing. The application must decide whether to continue reading subsequent data or to exit.

EAGAIN
: Occurs on a non-blocking read if there is no data available at the moment. No data is missing or damaged, retry or use polling for non-blocking reads.

EOVERFLOW
: The message limit is reached. The data that was read since the last successful read with 0 size is valid, but subsequent records might be missing. The application must decide whether to continue reading subsequent data or to exit.

Chapter 35. z/VM recording device driver

The z/VM recording device driver enables Linux on z/VM to read from the CP recording services and, thus, act as a z/VM wide control point.

The z/VM recording device driver uses the z/VM CP RECORDING command to collect records and IUCV to transmit them to the Linux instance.

For general information about CP recording system services, see *z/VM CP Programming Services*, SC24-6179.

Features

With the z/VM recording device driver, you can read from several CP services and collect records.

In particular, the z/VM recording device driver supports:

- Reading records from the CP error logging service, *LOGREC.
- Reading records from the CP accounting service, *ACCOUNT.
- Reading records from the CP diagnostic service, *SYMPTOM.
- Automatic and explicit record collection (see "Starting and stopping record collection" on page 405).

What you should know about the z/VM recording device driver

You can read records from different recording services, one record at a time.

The z/VM recording device driver is a character device driver that is grouped under the IUCV category of device drivers (see "Device categories" on page 7). There is one device for each recording service. The devices are created for you when the z/VM recording device driver module is loaded.

z/VM recording device nodes

Each recording service has a device with a name that corresponds to the name of the service.

Table 52 summarizes the names:

Table 52. z/VM recording device names

z/VM recording service	Standard device name
*LOGREC	logrec
*ACCOUNT	account
*SYMPTOM	symptom

About records

Records for different services are different in details, but follow the same overall structure.

The read function returns one record at a time. If there is no record, the read function waits until a record becomes available.

Each record begins with a 4-byte field that contains the length of the remaining record. The remaining record contains the binary z/VM data followed by the four bytes X'454f5200' to mark the end of the record. These bytes build the zero-terminated ASCII string “EOR”, which is useful as an eye catcher.

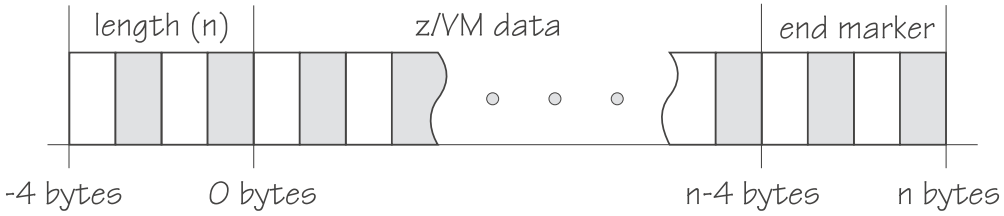

Figure 70. Record structure

Figure 70 illustrates the structure of a complete record as returned by the device. If the buffer assigned to the read function is smaller than the overall record size, multiple reads are required to obtain the complete record.

The format of the z/VM data (*LOGREC) depends on the record type that is described in the common header for error records HDRREC.

For more information about the z/VM record layout, see the *CMS and CP Data Areas and Control Blocks* documentation at

`www.ibm.com/vm/pubs/ctlblk.html`

Setting up the z/VM recording device driver

Before you can collect records, you must authorize your z/VM guest virtual machine and load the device driver module.

Procedure

1. Authorize the z/VM guest virtual machine on which your Linux instance runs to:
   - Use the z/VM CP RECORDING command.
   - Connect to the IUCV services to be used: one or more of *LOGREC, *ACCOUNT, and *SYMPTOM.
2. Load the z/VM recording device driver.

   You need to load the z/VM recording device driver module before you can work with z/VM recording devices. Load the vmlogrdr module with the **modprobe** command to ensure that any other required modules are loaded in the correct order:

   ```
   # modprobe vmlogrdr
   ```

   There are no module parameters for the z/VM recording device driver.

Working with z/VM recording devices

Typical tasks that you perform with z/VM recording devices include starting and stopping record collection, purging records, and opening and closing devices.

- "Starting and stopping record collection"
- "Purging existing records" on page 406
- "Querying the z/VM recording status" on page 406
- "Opening and closing devices" on page 407

Starting and stopping record collection

By default, record collection for a particular z/VM recording service begins when the corresponding device is opened and stops when the device is closed.

About this task

You can use a device's `autorecording` attribute to be able to open and close a device without also starting or stopping record collection. You can use a device's `recording` attribute to start and stop record collection regardless of whether the device is opened or not.

You cannot start record collection if a device is open records already exist. Before you can start record collection for an open device, you must read or purge any existing records for this device (see "Purging existing records" on page 406).

Procedure

To be able to open a device without starting record collection and to close a device without stopping record collection write `0` to the device's `autorecording` attribute. To restore the automatic starting and stopping of record collection write 1 to the device's `autorecording` attribute. Issue a command of this form:

```
# echo <flag> > /sys/bus/iucv/drivers/vmlogrdr/<device>/autorecording
```

where <*flag*> is either 0 or 1, and <*device*> is one of: `logrec`, `symptom`, or `account`. To explicitly turn on record collection write `1` to the device's `recording` attribute. To explicitly turn off record collection write `0` to the device's `recording` attribute. Issue a command of this form:

```
# echo <flag> > /sys/bus/iucv/drivers/vmlogrdr/<device>/recording
```

where <*flag*> is either 0 or 1, and <*device*> is one of: logrec, symptom, or account. You can read both the `autorecording` and the `recording` attribute to find the current settings.

Examples

- In this example, first the current setting of the `autorecording` attribute of the logrec device is checked, then automatic recording is turned off:

```
# cat /sys/bus/iucv/drivers/vmlogrdr/logrec/autorecording
1
# echo 0 > /sys/bus/iucv/drivers/vmlogrdr/logrec/autorecording
```

- In this example record collection is started explicitly and later stopped for the account device:

```
# echo 1 > /sys/bus/iucv/drivers/vmlogrdr/account/recording
...
# echo 0 > /sys/bus/iucv/drivers/vmlogrdr/account/recording
```

To confirm whether recording is on or off, read the `recording_status` attribute as described in "Querying the z/VM recording status."

Purging existing records

By default, existing records for a particular z/VM recording service are purged automatically when the corresponding device is opened or closed.

About this task

You can use a device's `autopurge` attribute to prevent records from being purged when a device is opened or closed. You can use a device's `purge` attribute to purge records for a particular device at any time without having to open or close the device.

Procedure

To be able to open or close a device without purging existing records write `0` to the device's `autopurge` attribute. To restore automatic purging of existing records, write `1` to the device's `autopurge` attribute. You can read the `autopurge` attribute to find the current setting. Issue a command of this form:

```
# echo <flag> > /sys/bus/iucv/drivers/vmlogrdr/<device>/autopurge
```

where *<flag>* is either 0 or 1, and *<device>* is one of: `logrec`, `symptom`, or `account`. To purge existing records for a particular device without opening or closing the device, write 1 to the device's purge attribute. Issue a command of this form:

```
# echo 1 > /sys/bus/iucv/drivers/vmlogrdr/<device>/purge
```

where *<device>* is one of: `logrec`, `symptom`, or `account`.

Examples

- In this example, the setting of the autopurge attribute for the logrec device is checked first, then automatic purging is switched off:

```
# cat /sys/bus/iucv/drivers/vmlogrdr/logrec/autopurge
1
# echo 0 > /sys/bus/iucv/drivers/vmlogrdr/logrec/autopurge
```

- In this example, the existing records for the symptom device are purged:

```
# echo 1 > /sys/bus/iucv/drivers/vmlogrdr/symptom/purge
```

Querying the z/VM recording status

Use the `recording_status` attribute to query the z/VM recording status.

Example

This example runs the z/VM CP command QUERY RECORDING and returns the complete output of that command. This list does not necessarily have an entry for all three services and there might also be entries for other guests.

```
# cat /sys/bus/iucv/drivers/vmlogrdr/recording_status
```

This command results in output similar to the following example:

```
RECORDING     COUNT     LMT     USERID     COMMUNICATION
EREP ON       00000000  002     EREP       ACTIVE
ACCOUNT ON    00001774  020     DISKACNT   INACTIVE
SYMPTOM ON    00000000  002     OPERSYMP   ACTIVE
ACCOUNT OFF   00000000  020     LINUX31    INACTIVE
```

where the lines represent:

- The service
- The recording status
- The number of queued records
- The number of records that result in a message to the operator
- The guest that is or was connected to that service and the status of that connection

A detailed description of the QUERY RECORDING command can be found in the *z/VM CP Commands and Utilities Reference*, SC24-6175.

Opening and closing devices

You can open, read, and release the device. You cannot open the device multiple times. Each time the device is opened it must be released before it can be opened again.

About this task

You can use a device's `autorecord` attribute (see "Starting and stopping record collection" on page 405) to enable automatic record collection while a device is open.

You can use a device's `autopurge` attribute (see "Purging existing records" on page 406) to enable automatic purging of existing records when a device is opened and closed.

Scenario: Connecting to the *ACCOUNT service

A typical sequence of tasks is autorecording, turning autorecording off, purging records, and starting recording.

Procedure

1. Query the status of z/VM recording. As root, issue the following command:

   ```
   # cat /sys/bus/iucv/drivers/vmlogrdr/recording_status
   ```

   The results depend on the system, and look similar to the following example:

```
RECORDING     COUNT     LMT     USERID     COMMUNICATION
EREP ON       00000000  002     EREP       ACTIVE
ACCOUNT ON    00001812  020     DISKACNT   INACTIVE
SYMPTOM ON    00000000  002     OPERSYMP   ACTIVE
ACCOUNT OFF   00000000  020     LINUX31    INACTIVE
```

2. Open `/dev/account` with an appropriate application. This action connects the guest to the *ACCOUNT service and starts recording. The entry for *ACCOUNT on guest LINUX31 changes to ACTIVE and ON:

```
# cat /sys/bus/iucv/drivers/vmlogrdr/recording_status

RECORDING     COUNT     LMT     USERID     COMMUNICATION
EREP ON       00000000  002     EREP       ACTIVE
ACCOUNT ON    00001812  020     DISKACNT   INACTIVE
SYMPTOM ON    00000000  002     OPERSYMP   ACTIVE
ACCOUNT ON    00000000  020     LINUX31    ACTIVE
```

3. Switch autopurge and autorecord off:

```
# echo 0 > /sys/bus/iucv/drivers/vmlogrdr/account/autopurge
```

```
# echo 0 > /sys/bus/iucv/drivers/vmlogrdr/account/autorecording
```

4. Close the device by ending the application that reads from it and check the recording status. While the connection is INACTIVE, RECORDING is still ON:

```
# cat /sys/bus/iucv/drivers/vmlogrdr/recording_status
RECORDING     COUNT     LMT     USERID     COMMUNICATION
EREP ON       00000000  002     EREP       ACTIVE
ACCOUNT ON    00001812  020     DISKACNT   INACTIVE
SYMPTOM ON    00000000  002     OPERSYMP   ACTIVE
ACCOUNT ON    00000000  020     LINUX31    INACTIVE
```

5. The next status check shows that some event created records on the *ACCOUNT queue:

```
# cat /sys/bus/iucv/drivers/vmlogrdr/recording_status
RECORDING     COUNT     LMT     USERID     COMMUNICATION
EREP ON       00000000  002     EREP       ACTIVE
ACCOUNT ON    00001821  020     DISKACNT   INACTIVE
SYMPTOM ON    00000000  002     OPERSYMP   ACTIVE
ACCOUNT ON    00000009  020     LINUX31    INACTIVE
```

6. Switch recording off:

```
# echo 0 > /sys/bus/iucv/drivers/vmlogrdr/account/recording
```

```
# cat /sys/bus/iucv/drivers/vmlogrdr/recording_status
RECORDING     COUNT     LMT     USERID     COMMUNICATION
EREP ON       000000000 002     EREP       ACTIVE
ACCOUNT ON    00001821  020     DISKACNT   INACTIVE
SYMPTOM ON    00000000  002     OPERSYMP   ACTIVE
ACCOUNT OFF   00000009  020     LINUX31    INACTIVE
```

7. Try to switch it on again, and check whether it worked by checking the recording status:

```
# echo 1 > /sys/bus/iucv/drivers/vmlogrdr/account/recording
```

```
# cat /sys/bus/iucv/drivers/vmlogrdr/recording_status
RECORDING     COUNT     LMT     USERID     COMMUNICATION
EREP ON       000000000 002     EREP       ACTIVE
ACCOUNT ON    00001821  020     DISKACNT   INACTIVE
SYMPTOM ON    00000000  002     OPERSYMP   ACTIVE
ACCOUNT OFF   00000009  020     LINUX31    INACTIVE
```

Recording did not start, in the message logs you might find a message:

```
 vmlogrdr: recording response: HCPCRC8087I Records are queued for user LINUX31 on the
*ACCOUNT recording queue and must be purged or retrieved before recording can be turned on.
```

This kernel message has priority 'debug' so it might not be written to any of your log files.

8. Now remove all the records on your *ACCOUNT queue either by starting an application that reads them from `/dev/account` or by explicitly purging them:

```
# echo 1 > /sys/bus/iucv/drivers/vmlogrdr/account/purge
```

```
# cat /sys/bus/iucv/drivers/vmlogrdr/recording_status
RECORDING     COUNT     LMT     USERID     COMMUNICATION
EREP ON       00000000  002     EREP       ACTIVE
ACCOUNT ON    00001821  020     DISKACNT   INACTIVE
SYMPTOM ON    00000000  002     OPERSYMP   ACTIVE
ACCOUNT OFF   00000000  020     LINUX31    INACTIVE
```

9. Now start recording and check status again:

```
# echo 1 > /sys/bus/iucv/drivers/vmlogrdr/account/recording
```

```
# cat /sys/bus/iucv/drivers/vmlogrdr/recording_status
RECORDING     COUNT      LMT     USERID     COMMUNICATION
EREP ON       00000000   002     EREP       ACTIVE
ACCOUNT ON    00001821   020     DISKACNT   INACTIVE
SYMPTOM ON    00000000   002     OPERSYMP   ACTIVE
ACCOUNT ON    00000000   020     LINUX31    INACTIVE
```

Chapter 36. z/VM unit record device driver

The z/VM unit record device driver provides Linux on z/VM with access to virtual unit record devices. Unit record devices comprise punch card readers, card punches, and line printers.

Linux access is limited to virtual unit record devices with default device types (2540 for reader and punch, 1403 for printer).

To write Linux files to the virtual punch or printer (that is, to the corresponding spool file queues) or to receive z/VM reader files (for example CONSOLE files) to Linux files, use the **vmur** command that is part of the s390-tools package (see "vmur - Work with z/VM spool file queues" on page 665).

What you should know about the z/VM unit record device driver

The z/VM unit record device driver is compiled as a separate module, vmur. When the vmur module is loaded, it registers a character device.

When a unit record device is set online, a device node is created for it.

- Reader: `/dev/vmrdr-0.0.<device_number>`
- Punch: `/dev/vmpun-0.0.<device_number>`
- Printer: `/dev/vmprt-0.0.<device_number>`

Working with z/VM unit record devices

After loading the vmur module, the required virtual unit record devices must be set online.

Procedure

Set the virtual unit record devices online.
For example, to set the devices with device bus-IDs 0.0.000c, 0.0.000d, and 0.0.000e online, issue the following command:

```
# chccwdev -e 0.0.000c-0.0.000e
```

What to do next

You can now use the **vmur** command to work with the devices ("vmur - Work with z/VM spool file queues" on page 665).

If you want to unload the vmur module, close all unit record device nodes. Attempting to unload the module while a device node is open results in error message `Module vmur is in use`. You can unload the vmur module, for example, by issuing **modprobe -r**.

Serialization is implemented per device; only one process can open a particular device node at any one time.

Chapter 37. z/VM DCSS device driver

The z/VM discontiguous saved segments (DCSS) device driver provides disk-like fixed block access to z/VM discontiguous saved segments.

A DCSS can hold a read-write RAM disk that can be shared among multiple Linux instances that run as guests of the same z/VM system. For example, such a RAM disk can provide a shared file system.

For information about DCSS, see *z/VM Saved Segments Planning and Administration*, SC24-6229.

What you should know about DCSS

The DCSS device names and nodes adhere to a naming scheme. There are different modes and options for mounting a DCSS.

Important: DCSSs occupy spool space. Be sure that you have enough spool space available (multiple times the DCSS size).

DCSS naming scheme

The standard device names are of the form dcssblk<*n*>, where <*n*> is the corresponding minor number.

The first DCSS device that is added is assigned the name dcssblk0, the second dcssblk1, and so on. When a DCSS device is removed, its device name and corresponding minor number are free and can be reassigned. A DCSS device that is added always receives the lowest free minor number.

DCSS device nodes

User space programs access DCSS devices by device nodes. SUSE Linux Enterprise Server 12 SP3 creates standard DCSS device nodes for you.

Standard DCSS device nodes have the form `/dev/<device_name>`, for example:

```
/dev/dcssblk0
/dev/dcssblk1
...
```

Accessing a DCSS in exclusive-writable mode

You must access a DCSS in exclusive-writable mode, for example, to create or update the DCSS.

To access a DCSS in exclusive-writable mode at least one of the following conditions must apply:

- The DCSS fits below the maximum definable address space size of the z/VM guest virtual machine.

  For large read-only DCSS, you can use suitable guest sizes to restrict exclusive-writable access to a specific z/VM guest virtual machine with a sufficient maximum definable address space size.

- The z/VM user directory entry for the z/VM guest virtual machine includes a NAMESAVE statement for the DCSS. See *z/VM CP Planning and Administration*, SC24-6178 for more information about the NAMESAVE statement.
- The DCSS was defined with the LOADNSHR operand.

  See *z/VM CP Commands and Utilities Reference*, SC24-6175 for information about the LOADNSHR operand.

  See "DCSS options" about saving DCSSs with the LOADNSHR operand or with other optional properties.

DCSS options

The z/VM DCSS device driver always saves DCSSs with default properties. Any previously defined options are removed.

For example, a DCSS that was defined with the LOADNSHR operand loses this property when it is saved with the z/VM DCSS device driver.

To save a DCSS with optional properties, you must unmount the DCSS device, then use the CP DEFSEG and SAVESEG commands to save the DCSS. See "Workaround for saving DCSSs with optional properties" on page 420 for an example.

See *z/VM CP Commands and Utilities Reference*, SC24-6175 for information about DCSS options.

Setting up the DCSS device driver

Before you can load and use DCSSs, you must load the DCSS block device driver. Use the `segments` module parameter to load one or more DCSSs when the DCSS device driver is loaded.

DCSS module parameter syntax

```
                                  ┌─,──────────────────────────┐
                                  │ ┌─:──────────┐             │
►►──modprobe── dcssblk── segments=──┴─┴─<dcss>──┬──────────┬──┴──────────────►◄
                                                └─(local)──┘
```

<dcss>
: specifies the name of a DCSS as defined on the z/VM hypervisor. The specification for *<dcss>* is converted from ASCII to uppercase EBCDIC.

: the colon (:) separates DCSSs within a set of DCSSs to be mapped to a single DCSS device. You can map a set of DCSSs to a single DCSS device if the DCSSs in the set form a contiguous memory space.

You can specify the DCSSs in any order. The name of the first DCSS you specify is used to represent the device under `/sys/devices/dcssblk`.

`(local)`
: sets the access mode to exclusive-writable after the DCSS or set of DCSSs are loaded.

, the comma (,) separates DCSS devices.

Examples

The following command loads the DCSS device driver and three DCSSs: DCSS1, DCSS2, and DCSS3. DCSS2 is accessed in exclusive-writable mode.

```
# modprobe dcssblk segments="dcss1,dcss2(local),dcss3"
```

The following command loads the DCSS device driver and four DCSSs: DCSS4, DCSS5, DCSS6, and DCSS7. The device driver creates two DCSS devices. One device maps to DCSS4 and the other maps to the combined storage space of DCSS5, DCSS6, and DCSS7 as a single device.

```
# modprobe dcssblk segments="dcss4,dcss5:dcss6:dcss7"
```

Avoiding overlaps with your guest storage

Ensure that your DCSSs do not overlap with the memory of your z/VM guest virtual machine (guest storage).

About this task

To find the start and end addresses of the DCSSs, enter the following CP command; this command requires privilege class E:

```
#cp q nss map
```

the output gives you the start and end addresses of all defined DCSSs in units of 4-kilobyte pages:

```
00: FILE FILENAME FILETYPE MINSIZE BEGPAG ENDPAG TYPE CL #USERS PARMREGS VMGROUP
...
00: 0011 MONDCSS  CPDCSS   N/A     09000  097FF  SC   R   00003 N/A      N/A
...
```

If all DCSSs that you intend to access are located above the guest storage, you do not need to take any action.

Procedure

If any DCSS that you intend to access with your guest machine overlaps with the guest storage, redefine the guest storage. Define two or more discontiguous storage extents such that the storage gap with the lowest address range covers the address ranges of all your DCSSs.

Note:

- You cannot place a DCSS into a storage gap other than the storage gap with the lowest address range.
- A z/VM guest that was defined with one or more storage gaps cannot access a DCSS above the guest storage.

From a CMS session, use the DEF STORE command to define your guest storage as discontiguous storage extents. Ensure that the storage gap between the extents covers all your DCSSs' address ranges. Issue a command of this form:

```
DEF STOR CONFIG 0.<storage_gap_begin> <storage_gap_end>.<storage above gap>
```

where:

<storage_gap_begin>
is the lower limit of the storage gap. This limit must be at or below the lowest address of the DCSS with the lowest address range.

Because the lower address ranges are needed for memory management functions, make the lower limit at least 128 MB. The lower limit for the DCSS increases with the total memory size. Although 128 MB is not an exact value, it is an approximation that is sufficient for most cases.

<storage_gap_end>
is the upper limit of the storage gap. The upper limit must be above the upper limit of the DCSS with the highest address range.

<storage above gap>
is the amount of storage above the storage gap. The total guest storage is *<storage_gap_begin> + <storage above gap>*.

All values can be suffixed with M to provide the values in megabyte. See *z/VM CP Commands and Utilities Reference*, SC24-6175 for more information about the DEF STORE command.

Example

To make a DCSS that starts at 144 MB and ends at 152 MB accessible to a z/VM guest with 512 MB guest storage:

```
DEF STORE CONFIG 0.140M 160M.372M
```

This specification is one example of how a suitable storage gap can be defined. In this example, the storage gap covers 140 - 160 MB and, thus, the entire DCSS range. The total guest storage is 140 MB + 372 MB = 512 MB.

Working with DCSS devices

Typical tasks for working with DCSS devices include mapping DCSS representations in z/VM and Linux, adding and removing DCSSs, and accessing and updating DCSS contents.

Adding a DCSS device

Storage gaps or overlapping storage ranges can prevent you from adding a DCSS.

Before you begin

- You must have set up one or more DCSSs on z/VM and know their names on z/VM.
- If you use the watchdog device driver, turn off the watchdog before adding a DCSS device. Adding a DCSS device can result in a watchdog timeout if the watchdog is active.
- You cannot concurrently access overlapping DCSSs.
- You cannot access a DCSS that overlaps with your z/VM guest virtual storage (see "Avoiding overlaps with your guest storage" on page 415).
- On z/VM guest virtual machines with one or more storage gaps, you cannot add a DCSS that is above the guest storage.
- On z/VM guest virtual machines with multiple storage gaps, you cannot add a DCSS unless it fits in the storage gap with the lowest address range.

Procedure

To add a DCSS device enter a command of this form:

```
# echo <dcss-list> > /sys/devices/dcssblk/add
```

<dcss-list>
: the name, as defined on z/VM, of a single DCSS or a colon (:) separated list of names of DCSSs to be mapped to a single DCSS device. You can map a set of DCSSs to a single DCSS device if the DCSSs in the set form a contiguous memory space. You can specify the DCSSs in any order. The name of the first DCSS you specify is used to represent the device under `/sys/devices/dcssblk`.

Examples

To add a DCSS called "MYDCSS" enter:

```
# echo MYDCSS > /sys/devices/dcssblk/add
```

To add three contiguous DCSSs "MYDCSS1", "MYDCSS2", and "MYDCSS3" as a single device enter:

```
# echo MYDCSS2:MYDCSS1:MYDCSS3 > /sys/devices/dcssblk/add
```

In sysfs, the resulting device is represented as `/sys/devices/dcssblk/MYDCSS2`.

Listing the DCSSs that map to a particular device

Read the `seglist` sysfs attribute to find out how DCSS devices in Linux map to DCSSs as defined in z/VM.

Procedure

To list the DCSSs that map to a DCSS device, issue a command of this form:

```
# cat /sys/devices/dcssblk/<dcss-name>/seglist
```

where <*dcss-name*> is the DCSS name that represents the DCSS device.

Examples

In this example, DCSS device `MYDCSS` maps to a single DCSS, “MYDCSS”.

```
# cat /sys/devices/dcssblk/MYDCSS/seglist
MYDCSS
```

In this example, DCSS device `MYDCSS2` maps to three contiguous DCSSs, “MYDCSS1”, “MYDCSS2”, and “MYDCSS3”.

```
# cat /sys/devices/dcssblk/MYDCSS2/seglist
MYDCSS2
MYDCSS1
MYDCSS3
```

Finding the minor number for a DCSS device

When you add a DCSS device, a minor number is assigned to it.

About this task

Unless you use dynamically created device nodes as provided by udev, you might need to know the minor device number that has been assigned to the DCSS (see “DCSS naming scheme” on page 413).

When you add a DCSS device, a directory of this form is created in sysfs:

`/sys/devices/dcssblk/<dcss-name>`

where <*dcss-name*> is the DCSS name that represents the DCSS device.

This directory contains a symbolic link, block, that helps you to find out the device name and minor number. The link is of the form `../../../block/dcssblk<n>`, where dcssblk<*n*> is the device name and <*n*> is the minor number.

Example

To find out the minor number that is assigned to a DCSS device that is represented by the directory `/sys/devices/dcssblk/MYDCSS` issue:

```
# readlink /sys/devices/dcssblk/MYDCSS/block
../../../block/dcssblk0
```

In the example, the assigned minor number is `0`.

Setting the access mode

You might want to access the DCSS device with write access to change the content of the DCSS or set of DCSSs that map to the device.

About this task

There are two possible write access modes to the DCSS device:

shared

In the shared mode, changes to DCSSs are immediately visible to all z/VM guests that access them. Shared is the default.

Note: Writing to a shared DCSS device bears the same risks as writing to a shared disk.

exclusive-writable

In the exclusive-writable mode you write to private copies of DCSSs. A private copy is writable, even if the original DCSS is read-only. Changes that you make to a private copy are invisible to other guests until you save the changes (see "Saving updates to a DCSS or set of DCSSs").

After saving the changes to a DCSS, all guests that open the DCSS access the changed copy. z/VM retains a copy of the original DCSS for those guests that continue accessing it, until the last guest stops using it.

To access a DCSS in the exclusive-writable mode, the maximum definable storage size of your z/VM virtual machine must be above the upper limit of the DCSS. Alternatively, suitable authorizations must be in place (see "Accessing a DCSS in exclusive-writable mode" on page 413).

For either access mode the changes are volatile until they are saved (see "Saving updates to a DCSS or set of DCSSs").

Procedure

Set the access mode before you open the DCSS device. To set the access mode to exclusive-writable, set the DCSS device's shared attribute to `0`. To reset the access mode to shared set the DCSS device's shared attribute to `1`.

Issue a command of this form:

```
# echo <flag> > /sys/devices/dcssblk/<dcss-name>/shared
```

where *<dcss-name>* is the DCSS name that represents the DCSS device.
You can read the shared attribute to find out the current access mode.

Example

To find out the current access mode of a DCSS device represented by the DCSS name "MYDCSS":

```
# cat /sys/devices/dcssblk/MYDCSS/shared
1
```

1 means that the current access mode is shared. To set the access mode to exclusive-writable issue:

```
# echo 0 > /sys/devices/dcssblk/MYDCSS/shared
```

Saving updates to a DCSS or set of DCSSs

Use the `save` sysfs attribute to save DCSSs that were defined without optional properties.

Before you begin

- Saving a DCSS as described in this section results in a default DCSS, without optional properties. For DCSSs that are defined with options (see "DCSS options" on page 414), see "Workaround for saving DCSSs with optional properties."
- If you use the watchdog device driver, turn off the watchdog before saving updates to DCSSs. Saving updates to DCSSs can result in a watchdog timeout if the watchdog is active.
- Do not place save requests before you have accessed the DCSS device.

Procedure

To place a request for saving changes permanently on the spool disk write 1 to the DCSS device's `save` attribute. If a set of DCSSs has been mapped to the DCSS device, the save request applies to all DCSSs in the set.

Issue a command of this form:

```
# echo 1 > /sys/devices/dcssblk/<dcss-name>/save
```

where *<dcss-name>* is the DCSS name that represents the DCSS device.
Saving is delayed until you close the device.
You can check if a save request is waiting to be performed by reading the contents of the `save` attribute.
You can cancel a save request by writing `0` to the `save` attribute.

Example

To check whether a save request exists for a DCSS device that is represented by the DCSS name "MYDCSS":

```
# cat /sys/devices/dcssblk/MYDCSS/save
0
```

The `0` means that no save request exists. To place a save request issue:

```
# echo 1 > /sys/devices/dcssblk/MYDCSS/save
```

To purge an existing save request issue:

```
# echo 0 > /sys/devices/dcssblk/MYDCSS/save
```

Workaround for saving DCSSs with optional properties

If you need a DCSS that is defined with special options, you must use a workaround to save the DCSSs.

Before you begin

Important: This section applies to DCSSs with special options only. The workaround in this section is error-prone and requires utmost care. Erroneous parameter values for the described CP commands can render a DCSS unusable. Use this workaround only if you really need a DCSS with special options.

Procedure

Perform the following steps to save a DCSS with optional properties:

1. Unmount the DCSS.

   Example: Enter this command to unmount a DCSS with the device node `/dev/dcssblk0`:

   ```
   # umount /dev/dcssblk0
   ```

2. Use the CP DEFSEG command to newly define the DCSS with the required properties.

   Example: Enter this command to newly define a DCSS, `mydcss`, with the range `80000-9ffff`, segment type `sr`, and the `loadnshr` operand:

   ```
   # vmcp defseg mydcss 80000-9ffff sr loadnshr
   ```

   Note: If your DCSS device maps to multiple DCSSs as defined to z/VM, you must perform this step for each DCSS. Be sure to specify the command correctly with the correct address ranges and segment types. Incorrect specifications can render the DCSS unusable.

3. Use the CP SAVESEG command to save the DCSS.

   Example: Enter this command to save a DCSS `mydcss`:

   ```
   # vmcp saveseg mydcss
   ```

   Note: If your DCSS device maps to multiple DCSSs as defined to z/VM, you must perform this step for each DCSS. Omitting this step for individual DCSSs can render the DCSS device unusable.

Reference

See *z/VM CP Commands and Utilities Reference*, SC24-6175 for details about the DEFSEG and SAVESEG CP commands.

Removing a DCSS device

Use the `remove` sysfs attribute to remove a DCSS from Linux.

Before you begin

A DCSS device can be removed only when it is not in use.

Procedure

You can remove the DCSS or set of DCSSs that are represented by a DCSS device from your Linux system by issuing a command of this form:

```
# echo <dcss-name> > /sys/devices/dcssblk/remove
```

where <*dcss-name*> is the DCSS name that represents the DCSS device.

Example

To remove a DCSS device that is represented by the DCSS name “MYDCSS” issue:

```
# echo MYDCSS > /sys/devices/dcssblk/remove
```

What to do next

If you have created your own device nodes, you can keep the nodes for reuse. Be aware that the major number of the device might change when you unload and reload the DCSS device driver. When the major number of your device has changed, existing nodes become unusable.

Scenario: Changing the contents of a DCSS

Before you can change the contents of a DCSS, you must add the DCSS to Linux, access it in a writable mode, and mount the file system on it.

About this task

The scenario that follows is based on these assumptions:

- The Linux instance runs as a z/VM guest with class E user privileges.
- A DCSS is set up and can be accessed in exclusive-writable mode by the Linux instance.
- The DCSS does not overlap with the guest's main storage.
- There is only a single DCSS named “MYDCSS”.
- The DCSS block device driver is set up and ready to be used.

The description in this scenario can readily be extended to changing the content of a set of DCSSs that form a contiguous memory space. The only change to the procedure would be mapping the DCSSs in the set to a single DCSS device in step 1. The assumptions about the set of DCSSs would be:

- The contiguous memory space that is formed by the set does not overlap with the guest storage.
- Only the DCSSs in the set are added to the Linux instance.

Procedure

Perform the following steps to change the contents of a DCSS:

1. Add the DCSS to the block device driver.

   ```
   # echo MYDCSS > /sys/devices/dcssblk/add
   ```

2. Ensure that there is a device node for the DCSS block device. If it is not created for you, for example by udev, create it yourself.
   a. Find out the major number that is used for DCSS block devices. Read `/proc/devices`:

   ```
   # cat /proc/devices
   ...
   Block devices
   ...
   254 dcssblk
   ...
   ```

The major number in the example is 254.

b. Find out the minor number that is used for MYDCSS. If MYDCSS is the first DCSS that to be added, the minor number is 0. To be sure, you can read a symbolic link that is created when the DCSS is added.

```
# readlink /sys/devices/dcssblk/MYDCSS/block
../../../block/dcssblk0
```

The trailing 0 in the standard device name dcssblk0 indicates that the minor number is, indeed, 0.

c. Create the node with the **mknod** command:

```
# mknod /dev/dcssblk0 b 254 0
```

3. Set the access mode to exclusive-write.

```
# echo 0 > /sys/devices/dcssblk/MYDCSS/shared
```

4. Mount the file system in the DCSS on a spare mount point.

```
# mount /dev/dcssblk0 /mnt
```

5. Update the data in the DCSS.
6. Create a save request to save the changes.

```
# echo 1 > /sys/devices/dcssblk/MYDCSS/save
```

7. Unmount the file system.

```
# umount /mnt
```

The changes to the DCSS are now saved. When the last z/VM guest stops accessing the old version of the DCSS, the old version is discarded. Each guest that opens the DCSS accesses the updated copy.

8. Remove the device.

```
# echo MYDCSS > /sys/devices/dcssblk/remove
```

9. Optional: If you have created your own device node, you can clean it up.

```
# rm -f /dev/dcssblk0
```

Chapter 38. z/VM CP interface device driver

Using the z/VM CP interface device driver (vmcp), you can send control program (CP) commands to the z/VM hypervisor and display the response.

The vmcp device driver works only for Linux on z/VM.

What you should know about the z/VM CP interface

The z/VM CP interface device driver (vmcp) uses the CP diagnose X'08' to send commands to CP and to receive responses. The behavior is similar but not identical to #CP on a 3270 or 3215 console.

Using the z/VM CP interface

There are two ways of using the z/VM CP interface driver:

- Through the `/dev/vmcp` device node
- Through a user space tool (see "vmcp - Send CP commands to the z/VM hypervisor" on page 663)

Differences between vmcp and a 3270 or 3215 console

Most CP commands behave identically with vmcp and on a 3270 or 3215 console. However, some commands show a different behavior:

- Diagnose X'08' (see *z/VM CP Programming Services*, SC24-6179) requires you to specify a response buffer with the command. Because the response size is not known in advance, the default response buffer of vmcp might be too small and the response truncated.
- On a 3270 or 3215 console, the CP command is executed on virtual CPU 0. The vmcp device driver uses the CPU that is scheduled by the Linux kernel. For CP commands that depend on the CPU number (like trace) you should specify the CPU, for example: `cpu 3 trace count`.
- Some CP commands do not return specific error or status messages through diagnose X'08'. These messages are only returned on a 3270 or 3215 console. For example, the command `vmcp link user1 1234 123 mw` might return the message `DASD 123 LINKED R/W` in a 3270 or 3215 console. This message is not displayed if the CP command is issued with vmcp. For details, see the z/VM help system or *z/VM CP Commands and Utilities Reference*, SC24-6175.

Using the device node

You can send a command to z/VM CP by writing to the vmcp device node.

Observe the following rules for writing to the device node:

- Omit the newline character at the end of the command string. For example, use **echo -n** if you are writing directly from a terminal session.
- Write the command in the same case as required on z/VM.
- Escape characters that need escaping in the environment where you issue the command.

Example

The following command attaches a device to your z/VM guest virtual machine. The asterisk (*) is escaped to prevent the command shell from interpreting it.

```
# echo -n ATTACH 1234 \* > /dev/vmcp
```

Application programmers

You can also use the vmcp device node directly from an application by using open, write (to issue the command), read (to get the response), ioctl (to get and set status), and close. The following ioctls are supported:

Table 53. The vmcp ioctls

Name	Code definition	Description
VMCP_GETCODE	_IOR (0x10, 1, int)	Queries the return code of z/VM.
VMCP_SETBUF	_IOW(0x10, 2, int)	Sets the buffer size (the device driver has a default of 4 KB; vmcp calls this ioctl to set it to 8 KB instead).
VMCP_GETSIZE	_IOR(0x10, 3, int)	Queries the size of the response.

Chapter 39. z/VM special messages uevent support

The smsgiucv_app kernel device driver receives z/VM CP special messages (SMSG) and delivers these messages to user space as udev events (uevents).

The device driver receives only messages that start with APP. The generated uevents contain the message sender and content as environment variables (see Figure 71).

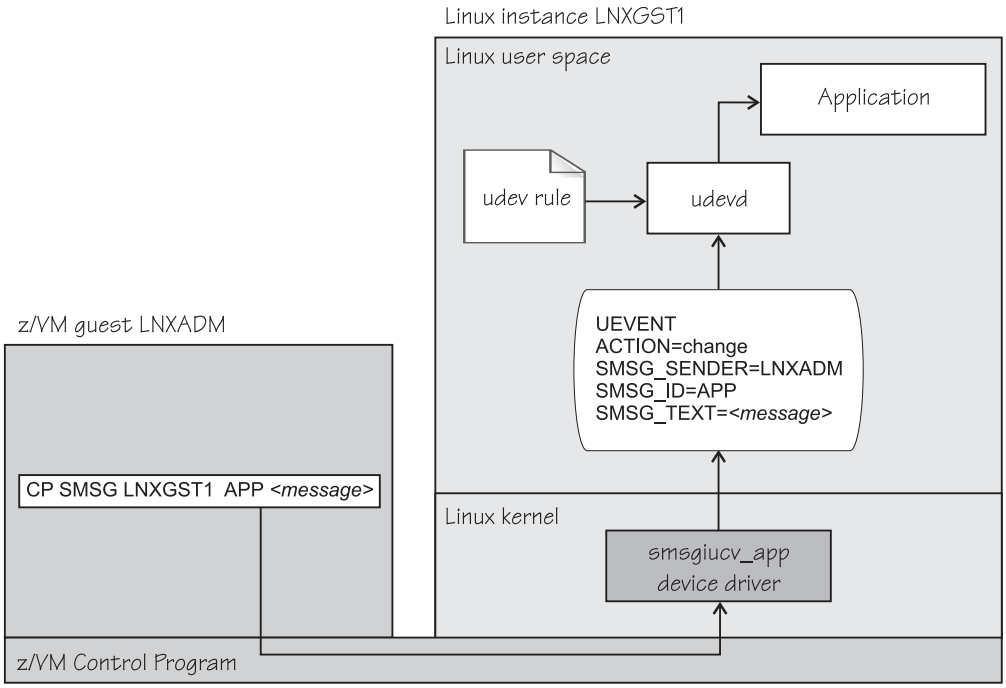

Figure 71. CP special messages as uevents in user space

You can restrict the received special messages to a particular z/VM user ID. CP special messages are discarded if the specified sender does not match the sender of the CP special message.

Setting up the CP special message device driver

Configure the CP special message device driver when you load the device driver module.

The z/VM user ID does not require special authorizations to receive CP special messages. CP special messages can be issued from the local z/VM guest virtual machine or from other guest virtual machines. You can issue special messages from Linux or from a CMS or CP session.

Load the device driver module with the **modprobe** command.

smsgiucv_app syntax

```
►►──modprobe── smsgiucv_app──┬──────────────────────┬──────────────────────────►◄
                             └─ sender=<user_ID>────┘
```

Where:

sender=*<user_ID>*
: permits CP special messages from the specified z/VM user ID only. CP special messages are discarded if the specified sender does not match the sender of the CP special message. If the **sender=** option is empty or not set, CP special messages are accepted from any z/VM user ID.

  Lowercase characters are converted to uppercase.

To receive messages from several user IDs leave the `sender=` parameter empty, or do not specify it, and then filter with udev rules (see "Example udev rule" on page 430).

Working with CP special messages

You might have to send, access, or respond to CP special messages.

- "Sending CP special messages"
- "Accessing CP special messages through uevent environment variables"
- "Writing udev rules for handling CP special messages" on page 429

Sending CP special messages

Issue a CP SMSG command from a CP or CMS session or from Linux to send a CP special message.

Procedure

To send a CP special message to LXGUEST1 from Linux, enter a command of the following form:

```
# vmcp SMSG LXGUEST1 APP "<message text>"
```

To send a CP special message to LXGUEST1, enter the following command from a CP or CMS session:

```
#CP SMSG LXGUEST1 APP <message text>
```

The special messages cause uevents to be generated. See "Writing udev rules for handling CP special messages" on page 429 for information about handling the uevents.

Accessing CP special messages through uevent environment variables

A uevent for a CP special message contains environment variables that you can use to access the message.

SMSG_ID
Specifies the message prefix. The SMSG_ID environment variable is always set to APP, which is the prefix that is assigned to the smsgiucv_app device driver.

SMSG_SENDER
Specifies the z/VM user ID that sent the CP special message.

Use SMSG_SENDER in udev rules for filtering the z/VM user ID if you want to accept CP special messages from different senders. All alphabetic characters in the z/VM user ID are uppercase characters.

SMSG_TEXT
Contains the message text of the CP special message. The APP prefix and leading white spaces are removed.

Writing udev rules for handling CP special messages

When using the CP special messages device driver, CP special messages trigger uevents.

change events
The smsgiucv_app device driver generates `change` uevents for each CP special message that is received.

For example, the special message:

```
#CP SMSG LXGUEST1 APP THIS IS A TEST MESSAGE
```

might trigger the following uevent:

```
UEVENT[1263487666.708881] change /devices/iucv/smsgiucv_app (iucv)
ACTION=change
DEVPATH=/devices/iucv/smsgiucv_app
SUBSYSTEM=iucv
SMSG_SENDER=MAINT
SMSG_ID=APP
SMSG_TEXT=THIS IS A TEST MESSAGE
DRIVER=SMSGIUCV
SEQNUM=1493
```

add and remove events
In addition to the `change` event for received CP special messages, generic `add` and `remove` events are generated when the module is loaded or unloaded, for example:

```
UEVENT[1263487583.511146] add /module/smsgiucv_app (module)
ACTION=add
DEVPATH=/module/smsgiucv_app
SUBSYSTEM=module
SEQNUM=1487

UEVENT[1263487583.514622] add /devices/iucv/smsgiucv_app (iucv)
ACTION=add
DEVPATH=/devices/iucv/smsgiucv_app
SUBSYSTEM=iucv
DRIVER=SMSGIUCV
SEQNUM=1488

UEVENT[1263487628.955149] remove /devices/iucv/smsgiucv_app (iucv)
ACTION=remove
DEVPATH=/devices/iucv/smsgiucv_app
SUBSYSTEM=iucv
SEQNUM=1489
```

```
UEVENT[1263487628.957082] remove /module/smsgiucv_app (module)
ACTION=remove
DEVPATH=/module/smsgiucv_app
SUBSYSTEM=module
SEQNUM=1490
```

With the information from the uevents, you can create custom udev rules to trigger actions that depend on the settings of the SMSG_* environment variables (see "Accessing CP special messages through uevent environment variables" on page 428).

For your udev rules, use the `add` and `remove` uevents to initialize and clean up resources. To handle CP special messages, write udev rules that match `change` uevents. For more information about writing udev rules, see the udev man page.

Example udev rule

The udev rules that process CP special messages identify particular messages and define one or more specific actions as a response.

The following example shows how to process CP special messages by using udev rules. The example contains rules for actions, one for all senders and one for the MAINT, OPERATOR, and LNXADM senders only.

The rules are contained in a block that matches uevents from the smsgiucv_app device driver. If there is no match, processing ends:

```
#
# Sample udev rules for processing CP special messages.
#
#
DEVPATH!="*/smsgiucv_app", GOTO="smsgiucv_app_end"

# ---------- Rules for CP messages go here --------

LABEL="smsgiucv_app_end"
```

The example uses the **vmur** command. If the vmur kernel module has been compiled as a separate module, this module must be loaded first. Then, the z/VM virtual punch device is activated.

```
# --- Initialization ---

# load vmur and set the virtual punch device online
SUBSYSTEM=="module", ACTION=="add", RUN+="/sbin/modprobe --quiet vmur"
SUBSYSTEM=="module", ACTION=="add", RUN+="/sbin/chccwdev -e d"
```

The following rule accepts messages from all senders. The message text must match the string UNAME. If it does, the output of the **uname** command (the node name and kernel version of the Linux instance) is sent back to the sender.

```
# --- Rules for all senders ----

# UNAME: tell the sender which kernel is running
ACTION=="change", ENV{SMSG_TEXT}=="UNAME", \
    PROGRAM=="/bin/uname -n -r", \
    RUN+="/sbin/vmcp msg $env{SMSG_SENDER} '$result'"
```

In the following example block rules are defined to accept messages from certain senders only. If no sender matches, processing ends. The message text must match the string DMESG. If it does, the environment variable PATH is set and the output of the **dmesg** command is sent into the z/VM reader of the sender. The name of the spool file is LINUX DMESG.

```
# --- Special rules available for particular z/VM user IDs ---

ENV{SMSG_SENDER}!="MAINT|OPERATOR|LNXADM", GOTO="smsgiucv_app_end"

# DMESG: punch dmesg output to sender
ACTION=="change", ENV{SMSG_TEXT}=="DMESG", \
    ENV{PATH}="/bin:/sbin:/usr/bin:/usr/sbin", \
    RUN+="/bin/sh -c 'dmesg |fold -s -w 74 |vmur punch -r -t -N LINUX.DMESG -u $env{SMSG_SENDER}'"
```

Chapter 40. Cooperative memory management

Cooperative memory management (CMM, or "cmm1") can reduce the memory that is available to an instance of Linux on z/VM.

To make pages unusable by Linux, CMM allocates them to special page pools. A diagnose code indicates to z/VM that the pages in these page pools are out of use. z/VM can then immediately reuse these pages for other z/VM guests.

To set up CMM, you must perform these tasks:

1. Load the cmm module.
2. Set up a resource management tool that controls the page pool. This tool can be the z/VM resource monitor (VMRM) or a third-party systems management tool.

This chapter describes how to set up CMM. For background information about CMM, see “Cooperative memory management background” on page 385.

You can also use the **cpuplugd** command to define rules for cmm behavior, see “cpuplugd - Control CPUs and memory” on page 533.

For information about setting up the external resource manager, see the chapter on VMRM in *z/VM Performance*, SC24-6208.

Setting up cooperative memory management

Set up Linux on z/VM to participate in the cooperative memory management by loading the cooperative memory management support module, cmm.

You can load the cmm module with the **modprobe** command.

cooperative memory management module parameter syntax

```
                   ┌─ sender=VMRMSVM──┐
►►──modprobe── cmm─┤                  ├──────────────────────────────────►◄
                   └─ sender=<user_ID>─┘
```

where *<user_ID>* specifies the z/VM guest virtual machine that is permitted to send messages to the module through the special messages interface. The default z/VM user ID is VMRMSVM, which is the default for the VMRM service machine.

Lowercase characters are converted to uppercase.

Example

To load the cooperative memory management module and allow the z/VM guest virtual machine TESTID to send messages:

```
# modprobe cmm sender=TESTID
```

Working with cooperative memory management

After it has been set up, CMM works through the resource manager. No further actions are necessary. You might want to read the sizes of the page pools for diagnostic purposes.

To reduce the Linux memory size, CMM allocates pages to page pools that make the pages unusable to Linux. There are two such page pools, a static pool and a timed pool. You can use the procfs interface to read the sizes of the page pools.

Reading the size of the static page pool

You can read the current size of the static page pool from procfs.

Procedure

Issue this command:

```
# cat /proc/sys/vm/cmm_pages
```

Reading the size of the timed page pool

You can read the current size of the timed page pool from procfs.

Procedure

Issue this command:

```
# cat /proc/sys/vm/cmm_timed_pages
```

Part 7. Security

These device drivers and features support security aspects of SUSE Linux Enterprise Server 12 SP3 for z Systems.

Newest version

You can find the newest version of this publication on IBM Knowledge Center at www.ibm.com/support/knowledgecenter/linuxonibm/liaaf/lnz_r_suse.html

Restrictions

For prerequisites and restrictions see the z Systems architecture specific information in the SUSE Linux Enterprise Server 12 SP3 release notes at www.suse.com/releasenotes

Chapter 41. Generic cryptographic device driver

The generic cryptographic device driver supports cryptographic coprocessor and accelerator hardware. Cryptographic coprocessors provide secure key cryptographic operations for the IBM Common Cryptographic Architecture (CCA) and the Enterprise PKCS#11 feature (EP11). Cryptographic accelerators support clear key cryptographic algorithms.

Some cryptographic processing in Linux can be offloaded from the processor and performed by dedicated CCA or EP11 coprocessors or accelerators. Several of these CCA or EP11 coprocessors and accelerators are available offering a range of features. The generic cryptographic device driver is required to use any available cryptographic hardware for processor offload.

Features

The cryptographic device driver supports a range of hardware and software functions.

Supported cryptographic adapters

The cryptographic hardware feature might contain one or two cryptographic adapters. Each adapter can be configured either as a coprocessor or as an accelerator. The CEX4 and CEX5 cryptographic adapters can also be configured as EP11 coprocessors.

- Crypto Express5S Accelerator (CEX5A)
- Crypto Express5S (CCA) Coprocessor (CEX5C)
- Crypto Express5S (EP11) Coprocessor (CEX5P)
- Crypto Express4S Accelerator (CEX4A)
- Crypto Express4S (CCA) Coprocessor (CEX4C)
- Crypto Express4S (EP11) Coprocessor (CEX4P)
- Crypto Express3 Accelerator (CEX3A)
- Crypto Express3 Coprocessor (CEX3C)

For information about setting up your cryptographic environment on Linux under z/VM, see *Security on z/VM*, SG24-7471 and *Security for Linux on System z*, SG24-7728.

Cryptographic devices for Linux on z/VM

A z/VM guest virtual machine can either have one or more dedicated cryptographic devices or one shared cryptographic device, but not both.

Dedicated devices
: Each dedicated device maps to exactly one hardware device. The device representations in Linux on z/VM show the type of the actual hardware.

Shared device
: The shared device can map to one or more hardware devices. The device representation in Linux on z/VM shows the type of the most advanced of these hardware devices. In this representation, cryptographic accelerators

are considered more advanced than coprocessors, which means that the shared-use type is chosen in the following order: CEX5A, CEX4A, CEX3A, CEX2A, CEX5C, CEX4C, CEX3C.

As a consequence, Linux on z/VM with access to a shared cryptographic accelerator can either observe an accelerator or a coprocessor, but not both.

When cryptographic coprocessors are shared, only clear-key RSA and random number functions are available to the Linux instance. Other requests are rejected by z/VM. For more information about supported functions, see the z/VM publications.

Supported facilities

The cryptographic device driver supports several cryptographic accelerators as well as CCA and EP11 coprocessors.

Cryptographic accelerators support clear key cryptographic algorithms. In particular, they provide fast RSA encryption and decryption for key sizes 1024-bit, 2048-bit, and 4096-bit (CEX5A, CEX4A and CEX3A only).

Cryptographic coprocessors act as a hardware security module (HSM) and provide secure key cryptographic operations for the IBM Common Cryptographic Architecture (CCA) and the Enterprise PKCS#11 feature (EP11).

For more information about CCA, see *Secure Key Solution with the Common Cryptographic Architecture Application Programmer's Guide*, SC33-8294. You can obtain this book at www.ibm.com/security/cryptocards/pciecc2/library.shtml.

For more information about EP11, see *Exploiting Enterprise PKCS #11 using openCryptoki*, SC34-2713. You can obtain this publication at www.ibm.com/support/knowledgecenter/linuxonibm/liaaf/sec_hw_supp.html.

Cryptographic coprocessors also provide clear key RSA operations for 1024-bit, 2048-bit, and 4096-bit keys, and a true random number generator. The EP11 coprocessor supports only secure key operations.

Hardware and software prerequisites

Support for the Crypto Express5S,Crypto Express4S, Crypto Express3, and Crypto Express2 features depends on the z Systems hardware model.

Table 54 lists the support for the cryptographic adapters.

Table 54. Support for cryptographic adapters by mainframe model.

Cryptographic adapters	Mainframe support
CEX5A, CEX5C, and CEX5P	z13
CEX4A, CEX4C, and CEX4P	• zEC12 • zBC12
CEX3A and CEX3C	• zEC12 • zBC12 • z196 • z114

Table 55 on page 439 lists the required software by function.

Table 55. Required software.

Software required	Function that is supported by the software
The CCA library	For the secure key cryptographic functions on CEX5C, CEX4C or CEX3C features. For information about CEX4C and CEX3C adapter coexistence and how to use CCA functions, see *Secure Key Solution with the Common Cryptographic Architecture Application Programmer's Guide*, SC33-8294. You can obtain it at www.ibm.com/security/cryptocards/pciecc2/library.shtml.
The EP11 library	For the secure key cryptographic functions on CEX4P features. See *Exploiting Enterprise PKCS #11 using openCryptoki*, SC34-2713. You can obtain it at www.ibm.com/support/knowledgecenter/linuxonibm/liaaf/sec_hw_supp.html.
The libica library	For the clear key cryptographic functions. See *libica Programmer's Reference*, SC34-2602. You can obtain it at www.ibm.com/support/knowledgecenter/linuxonibm/liaaf/sec_hw_supp.html.
APAR VM65577	To support CEX5A, CEX5C, and CEX5P adapters on z/VM 6.3 and 6.2. Note that EP11 support requires a dedicated adapter.
APAR VM65007	To support CEX4A and CEX4C adapters on z/VM 5.4, 6.1, and 6.2.
APAR VM65308	To share CEX4C CCA coprocessor adapters (APVIRT) on z/VM 5.4, 6.1, and 6.2.
APAR VM64656	To support CEX3C and CEX3A adapters for Linux on z/VM 6.1 or 5.4.
APAR VM64727	To correct a shared CCA coprocessor problem on z/VM 5.4.
APAR VM64793	To use the protected key functionality under z/VM and CCA on z/VM 5.4 and 6.1.

The CEX3C feature is supported as of version 4.0. You can download the CCA library from the IBM cryptographic coprocessor web page at
`www.ibm.com/security/cryptocards`

Note: The CCA library works with 64-bit applications only.

What you should know about the cryptographic device driver

Your use of the cryptographic device driver and the cryptographic hardware might need additional software. There are special considerations for Linux on z/VM, for performance, and for specific cryptographic operations.

Functions provided by the cryptographic device driver

The functions that are provided by the cryptographic device driver depend on whether it finds an accelerator or coprocessor.

If the cryptographic device driver finds a cryptographic accelerator, it provides Rivest-Shamir-Adleman (RSA) encryption and RSA decryption functions using clear keys. RSA operations are supported in both the modulus-exponent and the Chinese-Remainder Theorem (CRT) variants using 1024-bit, 2048-bit, and 4096-bit size keys.

If the cryptographic device driver finds a CCA coprocessor, it provides RSA encryption and RSA decryption functions using clear keys. RSA operations are

supported in both the modulus-exponent and the CRT variants using 1024-bit, 2048-bit, and 4096-bit size keys. It also provides a function to pass CCA requests to the cryptographic coprocessor and an access to the true random number generator of the coprocessor.

32-bit systems do not support 4096-bit key length for clear-key RSA operations.

Adapter discovery

Cryptographic adapters are detected automatically when the module is loaded. They are reprobed periodically, and following any hardware problem.

Depending on what adapters were detected, the cryptographic device driver might provide two misc device nodes, one for cryptographic requests, and one for a device from which random numbers can be read.

Upon detection of a cryptographic adapter, the device driver presents a Linux misc device, z90crypt, to user space. A user space process can open the misc device to submit cryptographic requests to the adapter through IOCTLs.

If at least one of the detected cryptographic adapters is a coprocessor, an additional misc device, `hwrng`, is created from which random numbers can be read.

You can set cryptographic adapters online or offline in the device driver. The cryptographic device driver ignores adapters that are configured offline even if the hardware is detected. The online or offline configuration is independent of the hardware configuration.

Request processing

Cryptographic adapters process requests asynchronously.

The device driver detects request completion either by standard polling, a special high-frequency polling thread, or by hardware interrupts. Hardware interrupt support is only available for Linux instances that run in an LPAR. If hardware interrupt support is available, the device driver does not use polling to detect request completion.

All requests to either of the two misc devices are routed to a cryptographic adapter using a crypto request scheduling function that, for each adapter, takes into account:

- The supported functions
- The number of pending requests
- A speed rating

A cryptographic adapter can be partitioned into multiple domains. Each domain acts as an independent virtual HSM that maintains its own master key. The cryptographic device driver uses only a single domain for all adapters. By default the kernel selects a domain. Alternatively, you can select the domain using a module parameter (see “Module parameters” on page 441).

Setting up the cryptographic device driver

Configure the cryptographic device driver through the `domain=` and the `poll_thread=` module parameters. You might also have to set up libraries.

The cryptographic device driver consists of multiple, separate modules:

ap
AP bus module.

zcrypt_api
request router module. Loads the `rng_core` module.

zcrypt_cex4
device driver for CEX4A, CEX4C, and CEX4P adapters.

zcrypt_cex2a
device driver for CEX3A adapters.

zcrypt_pcixcc
device driver for CEX3C adapters.

zcrypt_msgtype6
secure key message module. Performs secure key and RNG requests.

zcrypt_msgtype50
clear key message module. Performs RSA requests for both modulus-exponent and Chinese-Remainder Theorem variants.

For information about setting up cryptographic hardware on your mainframe system, see *zSeries Crypto Guide Update*, SG24-6870.

Module parameters

The cryptographic device driver consists of multiple, separate modules. You can configure the cryptographic device driver with YaST. Alternatively you can configure the device driver through module parameters when you load the AP bus module.

You can load and configure the cryptographic device driver independently of YaST. For alternative methods of starting and stopping the device driver in SUSE Linux Enterprise Server 12 SP3, see "Working with cryptographic devices" on page 443. To make any configuration changes persistent across IPLs, use YaST.

ap module syntax

```
                   ┌ domain=-1 ──────┐   ┌poll_thread=0┐
►►──modprobe── ap──┤                 ├───┤             ├──────────────────────►◄
                   └ domain=<domain>─┘   └poll_thread=1┘
```

where

<domain>
is an integer that identifies the cryptographic domain for the Linux instance. You define cryptographic domains in the LPAR activation profile on the HMC or SE.

The default (**domain=-**1) does not specify a particular domain, but causes the device driver to attempt to autodetect and use the domain index with the maximum number of devices.

<poll_thread>
is an integer argument and enables a polling thread to tune cryptographic performance. Valid values are 1 (enabled) or 0 (disabled, this value is the default). For details, see "Setting the polling thread" on page 446.

Note: If you are running Linux in an LPAR, AP interrupts are used instead of the polling thread. The polling thread is disabled when AP interrupts are available. See "Using AP adapter interrupts" on page 447.

All other modules are loaded automatically when they are required.

To remove a single module, for example, a module that supports a card type that is no longer available, issue a command of the following form:

```
# rmmod <module_name>
```

Examples

- This example loads the cryptographic device driver module ap:

```
# modprobe ap
```

  Note: Only one cryptographic domain is supported per LPAR or z/VM.
- This example loads the cryptographic device driver module ap to operate within the cryptographic domain 1:

```
# modprobe ap domain=1
```

See the **modprobe** man page for command details.

Accessing cryptographic devices

Programs in user space access cryptographic devices through a single device node.

In SUSE Linux Enterprise Server 12 SP3 udev creates the device node `/dev/z90crypt` for you. The device node z90crypt is assigned to the miscellaneous devices.

Accessing long random numbers

Applications can access large amounts of random number data through a character device.

Prerequisites:

- At least one cryptographic feature must be installed in the system and one coprocessor CEX5C, CEX4C or CEX3C, must be configured.
- Linux on z/VM needs a dedicated cryptographic coprocessor or a shared cryptographic device that is backed only by coprocessors.
- Automatic creation of the random number character device requires udev.
- The cryptographic device driver must be loaded.

If the cryptographic device driver detects at least one coprocessor capable of generating long random numbers, a new miscellaneous character device is registered. The new device can be found under `/proc/misc` as `hw_random`. If udev is installed, the default rules that are provided with udev create a character device called `/dev/hwrng`.

If udev is not installed, you must create a device node:

1. You require the minor number of the hardware random number generator. Read this number from `/proc/misc` where it is registered as hw_random, for example:

```
# grep hw_random /proc/misc
183 hw_random
```

2. Create the device node by issuing a command of this form:

```
# mknod /dev/hwrng c <misc_major> <dynamic_minor>
```

Reading from the character device returns the hardware-generated long random numbers. However, do not read excess amounts of random number data from this character device as the data rate is limited due to the cryptographic hardware architecture.

Removing the last available coprocessor adapter while the cryptographic device driver is loaded automatically removes the random number character device. Reading from the random number character device while all coprocessor adapters are set offline results in an input/output error (EIO). After at least one adapter is set online again, reading from the random number character device continues to return random number data.

Working with cryptographic devices

Typically, cryptographic devices are not directly accessed by users but through user programs. Some tasks can be performed through the sysfs interface.

Displaying information about cryptographic devices

Use the **`lszcrypt`** command to display status information about your cryptographic devices; alternatively, you can use sysfs.

About this task

For information about **lszcrypt**, see "lszcrypt - Display cryptographic devices" on page 613.

Each cryptographic adapter is represented in sysfs directory of the form
`/sys/bus/ap/devices/card<XX>`

where <*XX*> is the device index for each device. The valid device index range is hex 00 to hex 3f. For example, device 0x1a can be found under `/sys/bus/ap/devices/card1a`. The sysfs directory contains a number of attributes with information about the cryptographic adapter.

Table 56. Cryptographic adapter attributes

Attribute	Explanation
ap_functions	Read-only attribute that represents the function facilities that are installed on this device.
depth	Read-only attribute that represents the input queue length for this device.
hwtype	Read-only attribute that represents the hardware type for this device. The following values are defined: **8** CEX3A adapters. **9** CEX3C adapters. **10** CEX4A, CEX4C, or CEX4P adapters. **11** CEX5A, CEX5C, or CEX5P adapters.
raw_hwtype	Read-only attribute that represents the original hardware type of the cryptographic adapter.
modalias	Read-only attribute that represents an internally used device bus-ID.
online	Read-write attribute that shows whether the device is online (1) or offline (0).
pendingq_count	Read-only attribute that represents the number of requests in the hardware queue.
request_count	Read-only attribute that represents the number of requests that are already processed by this device.
requestq_count	Read-only attribute that represents the number of outstanding requests (not including the requests in the hardware queue).
type	Read-only attribute that represents the type of this device. The following types are defined: • CEX3A • CEX3C • CEX4A • CEX4C • CEX4P • CEX5A • CEX5C • CEX5P

To display status information about your cryptographic devices, you can also use the **lszcrypt** command (see "lszcrypt - Display cryptographic devices" on page 613).

Starting the cryptographic device driver

In SUSE Linux Enterprise Server 12 SP3 you start the cryptographic device driver with the **modprobe** command or with a start script.

Procedure

- Using the **modprobe** command:

```
# modprobe ap
```

  For information about module parameters, see "Module parameters" on page 441

- Using the start script:

```
# rcz90crypt start
```

  These commands load the cryptographic device driver module ap.

Setting devices online or offline

Use the **chzcrypt** command to set cryptographic devices online or offline.

Procedure

- Preferably, use the **chzcrypt** command with the **-e** option to set cryptographic devices online, or use the **-d** option to set devices offline.

  Examples:

  – To set cryptographic devices (in decimal notation) 0, 1, 4, 5, and 12 online issue:

```
# chzcrypt -e 0 1 4 5 12
```

  – To set all available cryptographic devices offline issue:

```
# chzcrypt -d -a
```

  For more information about **chzcrypt**, see "chzcrypt - Modify the cryptographic configuration" on page 513.

- Alternatively, write `1` to the `online` sysfs attribute of a cryptographic device to set the device online, or write `0` to set the device offline.

  Examples:

  – To set a cryptographic device with device ID 0x3e online issue:

```
# echo 1 > /sys/bus/ap/devices/card3e/online
```

  – To set a cryptographic device with device ID 0x3e offline issue:

```
# echo 0 > /sys/bus/ap/devices/card3e/online
```

  – To check the online status of the cryptographic device with device ID 0x3e issue:

```
# cat /sys/bus/ap/devices/card3e/online
```

The value is `1` if the device is online or `0` otherwise.

Setting the polling thread

For Linux on z/VM, enabling the polling thread can improve cryptographic performance.

About this task

Linux in LPAR mode supports interrupts that indicate the completion of cryptographic requests. See "Using AP adapter interrupts" on page 447. If AP interrupts are available, it is not possible to activate the polling thread.

Depending on the workload, enabling the polling thread can increase cryptographic performance. For Linux on z/VM, the polling thread is deactivated by default.

The cryptographic device driver can run with or without the polling thread. When it runs with the polling thread, one processor constantly polls the cryptographic cards for finished cryptographic requests while requests are being processed. The polling thread sleeps when no cryptographic requests are being processed. This mode uses the cryptographic cards as much as possible, at the cost of blocking one processor during cryptographic operations.

Without the polling thread, the cryptographic cards are polled at a much lower rate. The lower rate results in higher latency, and reduced throughput for cryptographic requests, but without a noticeable processor load.

Procedure

- Use the **`chzcrypt`** command to set the polling thread.

  Examples:

  – To activate the polling thread issue:

  ```
  # chzcrypt -p
  ```

  – To deactivate the polling thread issue:

  ```
  # chzcrypt -n
  ```

  For more information about **`chzcrypt`**, see "chzcrypt - Modify the cryptographic configuration" on page 513.

- Alternatively, you can set the polling thread through the `poll_thread` sysfs attribute. This read-write attribute can be found at the AP bus level.

  Examples:

  – To activate a polling thread for a device 0x3e issue:

  ```
  echo 1 > /sys/bus/ap/devices/card3e/poll_thread
  ```

  – To deactivate a polling thread for a cryptographic device with bus device-ID 0x3e issue:

```
echo 0 > /sys/bus/ap/devices/card3e/poll_thread
```

Using AP adapter interrupts

To improve cryptographic performance for Linux instances that run in LPAR mode, use AP interrupts.

About this task

Using AP interrupts instead of the polling thread frees one processor while cryptographic requests are processed.

During module initialization, the cryptographic device driver checks whether AP adapter interrupts are supported by the hardware. If so, polling is disabled and the interrupt mechanism is automatically used.

To query whether AP adapter interrupts are used, read the sysfs attribute `interrupt` of the device. Another interrupt attribute at the AP bus level, `/sys/bus/ap/ap_interrupts`, indicates that the AP bus is able to handle interrupts.

Example

To read the interrupt attribute for a device 0x3e issue:

```
# cat  /sys/bus/ap/devices/card3e/interrupt
```

If interrupts are used, the attribute shows "interrupts enabled", otherwise "interrupts disabled".

Setting the polling interval

Request polling is supported at nanosecond intervals.

Procedure

- Use the **`lszcrypt`** and **`chzcrypt`** commands to read and set the polling time.

  Examples:

  – To find out the current polling time, issue:

  ```
  # lszcrypt -b
  ...
  poll_timeout=250000 (nanoseconds)
  ```

  – To set the polling time to one microsecond, issue:

  ```
  # chzcrypt -t 1000
  ```

  For more information about **`lszcrypt`** and **`chzcrypt`** see “lszcrypt - Display cryptographic devices” on page 613 and “chzcrypt - Modify the cryptographic configuration” on page 513.

- Alternatively, you can set the polling time through the `poll_timeout` sysfs attribute. This read-write attribute can be found at the AP bus level.

  Examples:

– To read the poll_timeout attribute for the ap bus issue:

```
# cat  /sys/bus/ap/poll_timeout
```

– To set the poll_timeout attribute for the ap bus to poll, for example, every microsecond, issue:

```
# echo 1000 > /sys/bus/ap/poll_timeout
```

Dynamically adding and removing cryptographic adapters

On an LPAR, you can add or remove cryptographic adapters without the need to reactivate the LPAR after a configuration change.

About this task

z/VM does not support dynamically adding or removing cryptographic adapters.

Linux attempts to detect new cryptographic adapters and set them online every time a configuration timer expires. Read or modify the expiration time with the **lszcrypt** and **chzcrypt** commands.

For more information about **lszcrypt** and **chzcrypt**, see "lszcrypt - Display cryptographic devices" on page 613 and "chzcrypt - Modify the cryptographic configuration" on page 513.

Adding or removing of cryptographic adapters to or from an LPAR is transparent to applications that use clear key functions. If a cryptographic adapter is removed while cryptographic requests are being processed, the device driver automatically resubmits lost requests to the remaining adapters. Special handling is required for secure key.

Secure key requests are submitted to a dedicated cryptographic coprocessor. If this coprocessor is removed or lost, new requests cannot be submitted to a different coprocessor. Therefore, dynamically adding and removing adapters with a secure key application requires support within the application. For more information about secure key cryptography, see *Secure Key Solution with the Common Cryptographic Architecture Application Programmer's Guide*, SC33-8294. You can obtain this book at www.ibm.com/security/cryptocards/pciecc2/library.shtml.

Alternatively, you can read or set the polling time through the `config_time` sysfs attribute. This read-write attribute can be found at the AP bus level. Valid values for the `config_time` sysfs attribute are in the range 5 - 120 seconds.

For the secure key cryptographic functions on CEX4P and CEX5P features, see *Exploiting Enterprise PKCS #11 using openCryptoki*, SC34-2713. You can obtain it at www.ibm.com/developerworks/linux/linux390/documentation_suse.html

Procedure

You can work with cryptographic adapters in the following ways:

- Add or remove cryptographic adapters by using the SE or HMC. After the configuration timer expires, the cryptographic adapter is added to or removed from Linux, and the corresponding sysfs entries are created or deleted.

- Enable or disable a cryptographic adapter by using the **chzcrypt** command. The cryptographic adapter is only set online or offline in sysfs. The sysfs entries for the cryptographic adapter are retained. Use the **lszcrypt** command to check the results of the **chzcrypt** command.

Examples

- To use the **lszcrypt** and **chzcrypt** commands to find out the current configuration timer setting, issue:

```
# lszcrypt -b
...
config_time=30 (seconds)
...
```

  In the example, the timer is set to 30 seconds.
- To set the configuration timer to 60 seconds, issue:

```
# chzcrypt -c 60
```

To use sysfs to find out the current configuration timer setting, issue:

- To read the configuration timer setting, issue:

```
# cat  /sys/bus/ap/config_time
```

- To set the configuration timer to 60 seconds, issue:

```
# echo 60 > /sys/bus/ap/config_time
```

Stopping the cryptographic device driver

Use a script to stop the cryptographic device driver.

Procedure

Use the `rcz90crypt` script to stop the cryptographic device driver:

```
# rcz90crypt stop
```

Displaying information about the AP bus

Use the **lszcrypt -b** command to display status information about the AP bus; alternatively, you can use sysfs.

About this task

For information about **lszcrypt -b**, see "lszcrypt - Display cryptographic devices" on page 613.

The AP bus is represented in sysfs as a directory of the form

`/sys/bus/ap`

The sysfs directory contains a number of attributes with information about the AP bus.

Table 57. AP bus attributes

Attribute	Explanation
ap_domain	Read-only attribute that represents the domain. By default the kernel selects a domain. Alternatively, you can use the `domain=` module parameter , see "Module parameters" on page 441.
ap_max_domain_id	Read-only attribute that represents the largest possible domain ID. Domain IDs can range from 0 to this number, which depends on the mainframe model.
ap_control_domain_mask	Read-only attribute that represents the installed control domain facilities as a 32-byte field in hexadecimal notation. A maximun number of 256 domains can be addressed. Each bit position represents a dedicated control domain.
ap_interrupts	Read-only attribute that indicates whether interrupt handling for the AP bus is enabled.
config_time	Read-write attribute that represents a time interval in seconds used to detect new crypto devices.
poll_thread	Read-write attribute that indicates whether polling for the AP bus is enabled.
poll_timeout	Read-write attribute that represents the time interval of the poll thread in nanoseconds.

Example

```
# lszcrypt -b
ap_domain=5
ap_interrupts are enabled
config_time=30 (seconds)
poll_thread is disabled
poll_timeout=250000 (nanoseconds)
```

Unloading the cryptographic device driver

You can use **rmmod** to unload the cryptographic device driver modules.

Before you begin

The use count of the modules must be zero before you can unload them, that is, no other program must use a module you want to unload.

Procedure

- To unload the entire cryptographic device driver, explicitly unload each module. For example:

```
# rmmod zcrypt_cex4 zcrypt_cex2a zcrypt_pcixcc zcrypt_msgtype50 zcrypt_msgtype6 zcrypt_api ap
```

- Alternatively, unload all unused modules that are related to zcrypt_api. You must unload only modules that were actually loaded. For example, if only the zcrypt_msgtype6 and zcrypt_cex4 modules are loaded in addition to zcrypt_api and ap use:

```
# rmmod zcrypt_cex4 zcrypt_msgtype6 zcrypt_api ap
```

  List the arguments in the order given.

External programming interfaces

Applications can directly access the cryptographic device driver through an API.

Programmers: This information is intended for those who want to program against the cryptographic device driver or against the available cryptographic libraries.

If you want to circumvent libica and directly access the cryptographic device driver, see the cryptographic device driver header file in the Linux source tree: `/usr/include/asm-s390/zcrypt.h`

For information about the library APIs, see the following files in the Linux source tree:

- The libica library `/usr/include/ica_api.h`
- The openCryptoki library `/usr/include/opencryptoki/pkcs11.h`
- The CCA library `/opt/IBM/<prod>/include/csulincl.h`, where *<prod>* is specific to the particular hardware product.
- The EP11 library `/usr/include/ep11-host-devel/ep11.h` and `ep11adm.h`.

`ep11.h`, `ica_api.h`, and `pkcs11.h` require the devel packages to be installed. `csulincl.h` is present after the CCA library is installed.

Clear key cryptographic functions

The libica library provides a C API to clear-key cryptographic functions that are supported by z Systems hardware. You can configure both openCryptoki (using the icatoken) and openssl (using the ibmca engine) to use z Systems clear-key cryptographic hardware support through libica. See *libica Programmer's Reference*, SC34-2602 for details about the libica functions.

If you must circumvent libica and access the cryptographic device driver directly, your user space program must open the z90crypt device node and submit the cryptographic request using an IOCTL. The IOCTL subfunction ICARSAMODEXPO performs RSA modular exponent encryption and decryption. The IOCTL ICARSACRT performs RSA CRT decryption. See the cryptographic device driver header file in the Linux source tree: `/usr/include/asm-s390/zcrypt.h`

Ensuring the correct length for RSA encryption requests: Cryptographic coprocessors might reject RSA encryption requests for which the numerical value of the data to be encrypted is greater than the modulus.

Secure key cryptographic functions

To use secure key cryptographic functions in your user space program, see *Secure Key Solution with the Common Cryptographic Architecture Application Programmer's Guide*, SC33-8294. You can obtain this publication at www.ibm.com/security/cryptocards/pciecc2/library.shtml.

To use secure key cryptographic functions in your user space program by accessing an EP11 coprocessor adapter, see *Exploiting Enterprise PKCS #11 using openCryptoki*, SC34-2713. You can obtain it at www.ibm.com/support/knowledgecenter/linuxonibm/liaaf/sec_hw_supp.html

Reading true random numbers

To read true random numbers, a user space program must open the `hwrng` device and read as many bytes as needed from the device.

Tip: Using the output of the `hwrng` device to periodically reseed a pseudo-random number generator might be an efficient use of the random numbers.

Chapter 42. Pseudo-random number device driver

The pseudo-random number device driver provides user-space applications with pseudo-random numbers generated by the z Systems CP Assist for Cryptographic Function (CPACF).

The PRNG device driver supports the Deterministic Random Bit Generator (DRBG) requirements that are defined in NIST Special Publication 800-90/90A. The device driver uses the SHA-512 based DRBG mechanism.

To use the SHA-512 algorithm, the device driver requires version 5 of the Message Security Assist (MSA), which is available as of the EC12 with the latest firmware level. During initialization of the prng kernel module, or, if prng is compiled into the kernel, during kernel startup, the device driver checks for the prerequisite.

If the prerequisites for SHA-512 mode are not fulfilled, the device driver uses the Triple Data Encryption Standard (TDES) algorithm instead. In TDES mode, the PRNG device driver uses a DRBG in compliance with ANSI X9.17 based on the TDES cipher algorithm. You can force the fallback to TDES mode by using the `prng.mode=` kernel parameter or `mode=` module parameter.

Terminology hint: Various abbreviations are commonly used for Triple Data Encryption Standard, for example: TDES, triple DES, 3DES, and TDEA.

User-space programs access the pseudo-random-number device through a device node, `/dev/prandom`. SUSE Linux Enterprise Server 12 SP3 provides udev to create it for you.

Setting up the pseudo-random number device driver

In SUSE Linux Enterprise Server, the pseudo-random number device driver is compiled as a module. To use it, load the device driver module.

Module parameters

You can load and configure the PRNG device driver module.

Module parameter syntax

```
                   ┌─mode=0──────────┐   ┌─chunksize=256──────────┐
►►─modprobe─prng─┤                 ├─┤                        ├──────────►
                   └─mode=─┬─1─┬─┘   └─chunksize=<sizeparam>─┘
                           └─2─┘

  ┌─reseed_limit=100000──────────┐
►─┤                              ├──────────────────────────────────────►◄
  └─reseed_limit=<reseedparam>─┘
```

where:

mode=
specifies the mode in which the device driver runs:

0 Default. In this mode, the device driver automatically detects the MSA extension level and feature enablement. The device driver runs in SHA512 mode if the requirements are fulfilled, otherwise it falls back to TDES mode.

1 forces the device driver to run in TDES mode. The device driver starts only if the requirements for TDES mode are fulfilled.

2 forces the device driver to run in SHA512 mode. The device driver starts only if the requirements for SHA512 mode are fulfilled. The device driver does not fall back to TDES mode.

<sizeparam>
adjusts the random-buffer block size that the device driver uses to generate new random bytes. In TDES mode, this value can be in the range 8 - 65536, for SHA512 mode, the range is 64 - 65536. The default is 256 bytes.

<reseedparam>
adjusts the reseed limit in SHA512 mode. Multiply this value with the chunksize to obtain the reseed boundary in bytes. The value can be in the range 10000 - 100000. The default is 100000. In TDES mode, the reseed limit is a constant value of 4096 bytes.

Controlling access to the device node

SUSE Linux Enterprise Server by default assigns access mode 0644 to `/dev/prandom`.

To restrict access to the device node to root users, add the following udev rule. It prevents non-root users from reading random numbers from `/dev/prandom`.

```
KERNEL=="prandom", MODE="0400", OPTIONS="last_rule"
```

If access to the device is restricted to root, add the following udev rule. It automatically extends access to the device to other users.

```
KERNEL=="prandom", MODE="0444", OPTIONS="last_rule"
```

Working with the PRNG device driver

Read random numbers and control the settings of the PRNG device driver.

Tasks include:

- "Reading pseudo-random numbers"
- "Displaying PRNG information" on page 455
- "Reseeding the PRNG" on page 456
- "Setting the reseed limit" on page 456

Reading pseudo-random numbers

The pseudo-random number device is read-only. Use the read function, cat program, or dd program to obtain random numbers.

Example

In this example `bs` specifies the block size in bytes for transfer, and `count` specifies the number of records with block size. The bytes are written to the output file.

```
dd if=/dev/prandom of=<output file name> bs=<xxxx> count=<nnnn>
```

Displaying PRNG information

Read the attributes of the `prandom` device in sysfs.

About this task

The sysfs representation of a PRNG device is a directory: `/sys/devices/virtual/misc/prandom`. This sysfs directory contains a number of attributes with information about the device.

Table 58. Attributes with PRNG information

Attribute	Explanation
chunksize	The size, in bytes, of the random-data bytes buffer that is used to generate new random numbers. The value can be in the range 64 bytes - 64 KB. The default is 256 bytes. It is rounded up to the next 64-byte boundary and can be adjusted as a module parameter when you start the module.
byte_counter	The number of random bytes generated since the PRNG device driver was started. You can reset this value only by removing and reloading the kernel module, or rebooting Linux (if PRNG was compiled into the kernel). This attribute is read-only.
errorflag	SHA512 mode only: `0` if the PRNG device driver is instantiated and running well. Any other value indicates a problem. If there is an error indication other than 0: • The DRBG does not provide random data bytes to user space • The `read()` function fails • The error code errno is set to EPIPE (broken pipe) This attribute is read-only.
mode	`SHA512` if the PRNG device driver runs in SHA512 mode, `TDES` if the PRNG device driver runs in TDES mode. This attribute is read-only.
reseed	SHA512 mode only: An integer, writable only by root. Write any integer to this attribute to trigger an immediate reseed of the PRNG. See “Reseeding the PRNG” on page 456.
reseed_limit	SHA512 mode only: An integer, writable only by root to query or set the reseed counter limit. Valid values are in the range 10000 - 100000. The default is 100000. See “Setting the reseed limit” on page 456.
strength	SHA512 mode only: A read-only integer that shows the security strength according to NIST SP800-57. Returns the integer value of 256 in SHA512 mode.

Procedure

Issue a command of this form to read an attribute:

```
# cat /sys/devices/virtual/misc/prandom/<attribute>
```

where *<attribute>* is one of the attributes of Table 58.

Example

This example shows a `prandom` device that is running in SHA512 mode, set to reseed after 2.56 MB:

```
# cat /sys/devices/virtual/misc/prandom/chunksize
256
# cat /sys/devices/virtual/misc/prandom/mode
SHA512
# cat /sys/devices/virtual/misc/prandom/reseed_limit
10000
```

Setting the reseed limit

The PRNG reseeds after `chunksize` × `reseed_limit` bytes are read. By default, the reseed limit in bytes is 100000 × 256 = 25.6 MB.

Procedure

To set the number of times a `chunksize` amount of random data can be read from the PRNG before reseeding, write the number to the `reseed_limit` attribute. For example:

```
# echo 10000 > /sys/devices/virtual/misc/prandom/reseed_limit
```

The `reseed_limit` value must be in the range 10000 - 100000.

Reseeding the PRNG

You can force a reseed by writing to the `reseed` attribute.

Procedure

To reseed the PRNG, write an integer to its reseed attribute:

```
# echo 1 > /sys/devices/virtual/misc/prandom/reseed
```

Writing any integer value to this attribute triggers an immediate reseed of the PRNG instance.

Chapter 43. Hardware-accelerated in-kernel cryptography

The Linux kernel implements cryptographic operations for kernel subsystems like dm-crypt and IPSec. Applications can use these operations through the kernel cryptographic API.

In-kernel cryptographic operations can be performed by platform-specific implementations instead of the generic implementations within the Linux kernel.

On z Systems, hardware-accelerated processing is available for some of these operations.

Hardware dependencies and restrictions

The cryptographic operations that can be accelerated by hardware implementations depend on your z Systems hardware features and mode of operating SUSE Linux Enterprise Server 12 SP3.

z196 and later z Systems hardware supports hardware-acceleration for operations that cover the following standards:

- SHA-1
- SHA-256
- SHA-512
- DES and TDES (ECB, CBC, and CTR modes)
- AES (ECB, CBC, and CTR modes for all AES key sizes; XTS for 256-bit and 512-bit keys)
- GHASH

CPACF dependencies

Hardware-acceleration for DES, TDES, AES, and GHASH requires the Central Processor Assist for Cryptographic Function (CPACF). Read the `features` line from `/proc/cpuinfo` to find out whether the CPACF feature is enabled on your hardware.

Example:

```
# cat /proc/cpuinfo | grep features
features        : esan3 zarch stfle msa ldisp eimm dfp edat etf3eh highgprs te vx sie
```

In the output line, `msa` indicates that the CPACF feature is enabled. For information about enabling CPACF, see the documentation for your z Systems hardware.

FIPS restrictions of the hardware capabilities

If the kernel runs in Federal Information Processing Standard (FIPS) mode, only FIPS 140-2 approved algorithms are available. DES, for example, is not approved by FIPS 140-2.

Read `/proc/sys/crypto/fips_enabled` to find out whether your kernel runs in FIPS mode.

Example:

```
# cat /proc/sys/crypto/fips_enabled
0
```

The kernel of the example does not run in FIPS mode. For kernels that run in FIPS mode, the output of the command is 1.

You control the FIPS mode with the fips kernel parameter, see "fips - Run Linux in FIPS mode" on page 689.

For more information about FIPS, go to csrc.nist.gov/publications/PubsFIPS.html.

Support modules

SUSE Linux Enterprise Server 12 SP3 automatically loads the modules that support the available hardware-acceleration.

sha1_s390
: enables hardware-acceleration for SHA-1 operations. `sha1_s390` requires the `sha_common` module.

sha_256
: enables hardware-acceleration for SHA-224 and SHA-256 operations. `sha_256` requires the `sha_common` module.

sha_512
: enables hardware-acceleration for SHA-384 and SHA-512 operations. `sha_512` requires the `sha_common` module.

ghash_s390
: enables hardware-acceleration for Galois hashes.

aes_s390
: enables hardware-acceleration for AES encryption and decryption for the following modes of operation:
  - ECB, CBC, and CTR for key lengths 128, 192, and 256 bits
  - XTS for key lengths 128 and 256 bits

des_s390
: enables hardware-acceleration for DES and TDES for the following modes of operation: ECB, CBC, and CTR.

Note: CPACF for AES-GCM operations requires both the `aes_s390` and `ghash_s390` module.

Confirming hardware support for cryptographic operations

Read `/proc/crypto` to confirm that cryptographic operations are performed with hardware support.

Procedure

Read the `driver` lines from the content of `/proc/crypto`.

Example:

```
# cat /proc/crypto | grep driver
driver       : sha512-s390
driver       : sha224-s390
driver       : sha256-s390
driver       : sha1-s390
driver       : ghash-s390
...
```

Each line that ends in `-s390` indicates hardware-acceleration for a corresponding algorithm or mode.

Part 8. Performance measurement using hardware facilities

The z Systems hardware provides performance data that can be accessed by Linux on z Systems.

Gathering performance data constitutes an additional load on the Linux instance on which the application to be analyzed runs. Hardware support for data gathering can reduce the extra load and can yield more accurate data.

For the performance measurement facilities of z/VM, see "Performance monitoring for z/VM guest virtual machines" on page 383.

Other performance relevant information is provided in the context of the respective device driver or feature. For example, see "Working with DASD statistics in debugfs" on page 136 for DASD performance and "Starting and stopping collection of QETH performance statistics" on page 251 for qeth group devices.

Newest version

You can find the newest version of this publication on IBM Knowledge Center at www.ibm.com/support/knowledgecenter/linuxonibm/liaaf/lnz_r_suse.html

Restrictions

For prerequisites and restrictions see the z Systems architecture specific information in the SUSE Linux Enterprise Server 12 SP3 release notes at www.suse.com/releasenotes

Chapter 44. Channel measurement facility

The z Systems architecture provides a channel measurement facility to collect statistical data about I/O on the channel subsystem.

Data collection can be enabled for all CCW devices. User space applications can access this data through the sysfs.

The channel measurement facility provides the following features:

- Basic channel measurement format for concurrently collecting data on up to 4096 devices. (Specifying 4096 or more channels causes high memory consumption, and enabling data collection might not succeed.)
- Extended channel measurement format for concurrently collecting data on an unlimited number of devices.
- Data collection for all channel-attached devices, except those using QDIO (that is, except qeth and SCSI-over-Fibre channel attached devices)

Setting up the channel measurement facility

Configure the channel measurement facility by adding parameters to the kernel parameter file.

Channel measurement facility kernel parameters

```
   ┌─cmf.format=-1──────┐   ┌─cmf.maxchannels=1024──────────┐ (1)
►►─┤                    ├───┤                               ├──────────────────────►◄
   └─cmf.format=──┬─0─┬─┘   └─cmf.maxchannels=<no_channels>─┘
                  └─1─┘
```

Notes:

1 If you specify both parameter=value pairs, separate them with a blank.

where:

`cmf.format`
defines the format, `0` for basic and `1` for extended, of the channel measurement blocks. The default, `-1`, assigns a format depending on the hardware, the extended format for zEnterprise mainframes.

`cmf.maxchannels=<no_channels>`
limits the number of devices for which data measurement can be enabled concurrently with the basic format. The maximum for *<no_channels>* is 4096. A warning will be printed if more than 4096 channels are specified. The channel measurement facility might still work; however, specifying more than 4096 channels causes a high memory consumption.

For the extended format there is no limit and any value you specify is ignored.

Working with the channel measurement facility

Typical tasks that you need to perform when you work with the channel measurement facility is controlling data collection and reading data.

Enabling, resetting, and switching off data collection

Control data collection through the `cmb_enable` sysfs attribute of the device.

Procedure

Use a device's cmb_enable attribute to enable, reset, or switch off data collection.

- To enable data collection, write 1 to the cmb_enable attribute. If data collection was already enabled, writing 1 to the attribute resets all collected data to zero. Issue a command of this form:

  ```
  # echo 1 > /sys/bus/ccw/devices/<device_bus_id>/cmb_enable
  ```

  where `/sys/bus/ccw/devices/<device_bus_id>` represents the device in sysfs.

  When data collection is enabled for a device, a subdirectory `/sys/bus/ccw/devices/<device_bus_id>/cmf` is created that contains several attributes. These attributes contain the collected data (see "Reading data").
- To switch off data collection issue a command of this form:

  ```
  # echo 0 > /sys/bus/ccw/devices/<device_bus_id>/cmb_enable
  ```

  When data collection for a device is switched off, the subdirectory `/sys/bus/ccw/devices/<device_bus_id>/cmf` and its content are deleted.

Example

In this example, data collection for a device `/sys/bus/ccw/devices/0.0.b100` is already active and reset:

```
# cat /sys/bus/ccw/devices/0.0.b100/cmb_enable
1
# echo 1 > /sys/bus/ccw/devices/0.0.b100/cmb_enable
```

Reading data

Read the sysfs attributes with collected I/O data, for example with the **cat** command.

Procedure

While data collection is enabled for a device, the directories that represent it in sysfs contain a subdirectory, `cmf`, with several read-only attributes. These attributes hold the collected data.

To read one of the attributes issue a command of this form:

```
# cat /sys/bus/ccw/devices/<device_bus_id>/cmf/<attribute>
```

where `/sys/bus/ccw/devices/<device_bus_id>` is the directory that represents the device, and *<attribute>* the attribute to be read. Table 59 on page 465 summarizes the available attributes.

Table 59. Attributes with collected I/O data

Attribute	Value
ssch_rsch_count	An integer that represents the ssch rsch count value.
sample_count	An integer that represents the sample count value.
avg_device_connect_time	An integer that represents the average device connect time, in nanoseconds, per sample.
avg_function_pending_time	An integer that represents the average function pending time, in nanoseconds, per sample.
avg_device_disconnect_time	An integer that represents the average device disconnect time, in nanoseconds, per sample.
avg_control_unit_queuing_time	An integer that represents the average control unit queuing time, in nanoseconds, per sample.
avg_initial_command_response_time	An integer that represents the average initial command response time, in nanoseconds, per sample.
avg_device_active_only_time	An integer that represents the average device active only time, in nanoseconds, per sample.
avg_device_busy_time	An integer representing the average value device busy time, in nanoseconds, per sample.
avg_utilization	A percent value that represents the fraction of time that has been spent in device connect time plus function pending time plus device disconnect time during the measurement period.
avg_sample_interval	An integer that represents the average time, in nanoseconds, between two samples during the measurement period. Can be “-1” if no measurement data has been collected.
avg_initial_command_response_time	An integer that represents the average time in nanoseconds between the first command of a channel program being sent to the device and the command being accepted. Available in extended format only.
avg_device_busy_time	An integer that represents the average time in nanoseconds of the subchannel being in the “device busy” state when initiating a start or resume function. Available in extended format only.

Example

To read the avg_device_busy_time attribute for a device `/sys/bus/ccw/devices/0.0.b100`:

```
# cat /sys/bus/ccw/devices/0.0.b100/cmf/avg_device_busy_time
21
```

Chapter 45. OProfile hardware sampling support

OProfile is a performance analysis tool for Linux that can use hardware sampling support to capture performance data for processes, shared libraries, the kernel, and device drivers.

For general information about OProfile, see sourceforge.net/projects/oprofile.

OProfile hardware sampling can be used for Linux instances in LPAR mode.

Note: OProfile and perf-based sampling tools use the CPU-measurement sampling facility and, therefore, cannot simultaneously collect sample data.

Setting up OProfile support

After you install the OProfile package that is provided with SUSE Linux Enterprise Server, you must initialize OProfile on your Linux instance. Then, enable hardware sampling for the LPAR in which the Linux instance runs.

Initializing OProfile

Before initialization, the `/dev/oprofile` file system is not available and commands that act on files within this file system fail.

Issue:

```
# opcontrol --init
```

This command loads the `oprofile` module and initializes the OProfile support. For more information, see oprofile.sourceforge.net/docs.

Setting up an LPAR for hardware sampling

To enable hardware sampling for an LPAR you must activate the LPAR with authorization for basic sampling control.

See the *Support Element Operations Guide* for your mainframe system for more information.

To check if hardware sampling is enabled, read the `hwsampler` attribute:

```
# cat /dev/oprofile/hwsampling/hwsampler
1
```

If hardware sampling is enabled, the value is `1`.

If the value is `0`, timer-interrupt based sampling is used. The reason might be that your z Systems hardware does not support hardware sampling, that your LPAR has not been set up for hardware sampling, or that your Linux instance runs as a z/VM guest.

You can disable hardware sampling by writing `0` to the `hwsampler` attribute:

```
# echo 0 > /dev/oprofile/hwsampling/hwsampler
```

Working with OProfile

You might have to set the sampling interval and the sampler memory, and you might have to start and stop sampling.

- "Starting and stopping sampling"
- "Setting the sampling interval"
- "Setting the sampler memory"

Starting and stopping sampling

You start and stop sampling as you would on any hardware platform.

See oprofile.sourceforge.net/docs for details.

Setting the sampling interval

Set the sampling interval through the `/dev/oprofile/hwsampling/hw_interval` attribute in the `/dev/oprofile` file system.

Procedure

Issue a command of this form to set the sample interval:

```
# echo  <value> > /dev/oprofile/hwsampling/hw_interval
```

where <*value*> is the sample interval in processor cycles. The sample interval must not exceed the value of the `hw_max_interval` attribute and it must not be smaller than the value of the `hw_min_interval` attribute. The default is 4096.

Example

This example sets the sampling rate to twice the default rate:

```
# echo 2048 > /dev/oprofile/hwsampling/hw_interval
```

Setting the sampler memory

Set the sampler memory size through the `/dev/oprofile/hwsampling/hw_sdbt_blocks` attribute in the `/dev/oprofile` file system.

About this task

The best size for the sampler memory depends on the particular system and the workload to be measured. Providing the sampler with too little memory results in lost samples. Reserving too much system memory for the sampler impacts the overall performance and, hence, also the workload to be measured.

Procedure

To set the size of the memory that is reserved for sampled data, issue a command of this form:

```
# echo <value> > /dev/oprofile/hwsampling/hw_sdbt_blocks
```

where <*value*> is the memory size in multiples of 2 MB. The default is 1.

Example

```
# echo 2 > /dev/oprofile/hwsampling/hw_sdbt_blocks
```

Chapter 46. Using the CPU-measurement counter facility

Use the CPU-measurement counter facility to obtain performance data for Linux instances in LPAR mode.

The z/Architecture CPU-measurement facilities were introduced for System z10 in October 2008.

Counter facility

The hardware counters are grouped into the following counter sets:

- Basic counter set
- Problem-state counter set
- Crypto-activity counter set
- Extended counter set

A further common counter set, the Coprocessor group counter set, cannot be accessed from Linux on z Systems.

Sampling facility

The sampling facility includes the following sampling modes:

- Basic-sampling mode
- Diagnostic-sampling mode

The diagnostic-sampling mode is intended for use by IBM support only.

Conflict with OProfile: Perf-based sampling tools and OProfile use the CPU-measurement sampling facility and, therefore, cannot simultaneously collect sample data.

The number and type of individual counters and the details of the sampling facility depend on your z Systems hardware model. Use the **lscpumf** command to find out what is available for your hardware (see "lscpumf - Display information about the CPU-measurement facilities" on page 587). For details, see *IBM The CPU-Measurement Facility Extended Counters Definition for z10™, z196, z114 and zEC12*, SA23-2261.

A further common counter set, Coprocessor group counter set, cannot be accessed from Linux on z Systems.

You can use the **perf** tool on Linux to access the hardware counters and sample data of the CPU-measurement counter facility.

To use the perf tool, you need to install the perf tool package provided with SUSE Linux Enterprise Server.

If you want to write your own application for analyzing counter or sample data, you can use the `libpfm4` library. This library is available on sourceforge at perfmon2.sourceforge.net.

Working with the CPU-measurement counter facility

You can use the perf tool to work with the CPU-measurement counter facility for authorized LPARs.

- "Authorizing an LPAR for CPU-measurement counter sets"
- "Reading CPU-measurement counters for an application"
- "Collecting CPU-measurement sample data" on page 473
- "Setting limits for the sampling facility buffer" on page 474
- "Obtaining debug information" on page 475

Authorizing an LPAR for CPU-measurement counter sets

The LPAR within which the Linux instance runs must be authorized to use the CPU-measurement counter sets. Use the HMC or SE to authorize the LPAR for the counter sets you need.

Procedure

Perform these steps on the HMC or SE to grant authorization:

1. Navigate to the LPAR for which you want to grant authorization for the counter sets.
2. Within the LPAR profile, select the **Security** page.
3. Within the counter facility options, select each counter set you want to use. The coprocessor group counter set is not supported by Linux on z Systems.
4. Click **Save**.

What to do next

Deactivate, activate, and IPL the LPAR to make the authorization take effect. For more information, see the *Support Element Operations Guide* for your mainframe system.

Reading CPU-measurement counters for an application

Use the perf tool to read CPU-measurement counters with the scope of an application.

Before you begin

You must know the hexadecimal value of the counter number. You can find the decimal values in *z/Architecture The Load-Program-Parameter and the CPU-Measurement Facilities*, SA23-2260 and in *IBM The CPU-Measurement Facility Extended Counters Definition for z10, z196, z114 and zEC12*, SA23-2261.

Procedure

Issue a command of this form to read a counter:

```
# perf stat -e r<hex_counter_number> -- <path_to_app>
```

Where:

-e r<*hex_counter_number*>
specifies the hexadecimal value for the counter number as a raw event.

Tip: You can read multiple counters by specifying a comma-separated list of raw events, for example, `-e r20,r21`.

<path_to_app>
specifies the path to the application to be evaluated. The counters are incremented for all threads that belong to the specified application.

For more information about the **perf** command, see the **perf** or **perf-stat** man page.

Example

To read the counters with hexadecimal values `20` (problem-state cycle count) and `21` (problem-state instruction count) for an application `/bin/df`:

```
# perf stat -e r20,r21 -- /bin/df
Filesystem           1K-blocks      Used Available Use% Mounted on
/dev/dasda1            7188660   2521760   4306296  37% /
none                    923428        88    923340   1% /dev/shm
/dev/dasdb1            7098728   2631972   4106152  40% /root

 Performance counter stats for '/bin/df':

           1185753 raw 0x20
            257509 raw 0x21

       0.002507687 seconds time elapsed
```

Collecting CPU-measurement sample data

Use the perf tool to read CPU-measurement sample data.

Procedure

Issue a command of this form to read sample data:

```
# perf record -e cpum_sf/event=SF_CYCLES_BASIC/ -- <path_to_app>
```

Where *<path_to_app>* is the path to the application for which you want to collect sample data. If you specify `-a` instead of the double hyphen and path, system-wide sample data is collected. Instead of the symbolic name, you can also specify the raw event name `rB0000`.

Example

```
# perf record -e cpum_sf/event=SF_CYCLES_BASIC/ -- /bin/df
Filesystem           1K-blocks      Used Available Use% Mounted on
/dev/dasda1            6967656   3360508   3230160  51% /
none                    942956        88    942868   1% /dev/shm
/dev/dasdb1            6967656   4132924   2474128  63% /root
[ perf record: Woken up 1 times to write data ]
[ perf record: Captured and wrote 0.001 MB perf.data (~29 samples) ]
```

What to do next

You can now display the sample data by issuing the following command:

```
# perf report
```

For more information about collecting and displaying sample data with the **perf** command, see the **perf-record** and the **perf-report** man pages.

Hint: You can use the **perf record -F** option to collect sample data at a high frequency or the **perf record -c** option to collect sample data for corresponding short sampling intervals. Specified values must be supported by both the CPU-measurement sampling facility and perf. Issue **lscpumf -i** to find out the maximum and minimum values for the CPU-measurement sampling facility. If perf fails at a high sampling frequency, you might have to adjust the `kernel.perf_event_max_sample_rate` system control to override default perf limitations.

Setting limits for the sampling facility buffer

Use the **chcpumf** command to set the minimum and maximum buffer size for the CPU-measurement sampling facility.

See "chcpumf - Set limits for the CPU measurement sampling facility buffer" on page 504.

Before you begin

For each CPU, the CPU-measurement sampling facility has a buffer for writing sample data. The required buffer size depends on the sampling function and the sampling interval that is used by the perf tool. The sampling facility starts with an initial buffer size that depends on the expected requirements, your z Systems hardware, and the available hardware resources. During the sampling process, the sampling facility increases the buffer size if required.

The sampling facility is designed for autonomous buffer management, and you do not usually need to intervene. You might want to change the minimum or maximum buffer size, for example, for one of the following reasons:

- There are considerable resource constraints on your system that cause perf sampling to malfunction and sample data to be lost.
- As an expert user of perf and the sampling facility, you want to explore results with particular buffer settings.

Procedure

Use the **chcpumf** command to set the minimum and maximum buffer sizes.

1. Optional: Specify the **lscpumf** command with the `-i` parameter to display the current limits for the buffer size (see "lscpumf - Display information about the CPU-measurement facilities" on page 587).
2. Optional: Specify the **chcpumf** command with the `-m` parameter to set the minimum buffer size.

   Example:

   ```
   # chcpumf -m 500
   ```

   The value that you specify with `-m` is the minimum buffer size in multiples of sample-data-blocks. A sample-data-block occupies approximately 4 KB. The specified minimum value is compared with the initial buffer size that is calculated by the sampling facility. The greater value is then used as the initial size when the sampling facility is started.

3. Optional: Specify the **chcpumf** command with the `-x` parameter to set the maximum buffer size.

   Example:

   ```
   # chcpumf -x 1000
   ```

   The value that you specify with `-x` is the maximum buffer size in multiples of sample-data-blocks. A sample-data-block occupies approximately 4 KB. The specified maximum is the upper limit to which the sampling facility can adjust the buffer.

Example

Tips:

- You can specify both, the minimum and the maximum buffer size with a single command.
- Use the `-V` parameter to display the minimum and maximum buffer settings that apply as a result of the command.

Example: To change the minimum buffer size to 500 times the size of a sample-data-block and the maximum buffer size to 1000 times the size of a sample-data-block, issue:

```
# chcpufm -V -m 500 -x 1000
Sampling buffer sizes:
    Minimum:    500 sample-data-blocks
    Maximum:   1000 sample-data-blocks
```

Obtaining debug information

You can obtain version information for the CPU-measurement counter facility and check which counter sets are authorized on your LPAR.

Before you begin

If you call magic sysrequest functions with a method other than through the procfs, you might need to activate them first. For more information about the magic sysrequest functions, see "Using the magic sysrequest feature" on page 49.

Procedure

Perform these steps to obtain debug information:

1. Use the magic sysrequest function with character `p` to trigger a kernel message with information about the CPU-measurement counter facility.

   For example, trigger the message from procfs:

   ```
   # echo p > /proc/sysrq-trigger
   ```

2. Find the message by issuing the **dmesg** command and looking for output lines that include CPUM_CF.

   Tip: Look for message number `perf.ee05c5`.

   Example:

```
perf.ee05c5: CPU[0] CPUM_CF: ver=1.2 A=000c E=0008 C=0000
```

Note: The message is specific to the particular processor that processed the magic sysrequest. However, the scope of the version (`ver=`) and authorization (`A=`) information is the LPAR and can be read from the message for any processor in the LPAR. The values for `E=` (enabled) and `C=` (activated) can differ among processors.

3. Obtain the version of the CPU-measurement counter facility by reading the value of the `ver=` parameter in the message.
4. Check whether counter sets are authorized for the LPAR by interpreting the value of the `A=` parameter in the message.

   The value is a 4-digit hexadecimal number that represent the sums of these values for the individual counter sets:

   0001 Extended counter set.

   0002 Basic counter set.

   0004 Problem-state counter set.

   0008 Crypto-activity counter set.

   Examples:

   `A=0000` means that none of the counter set are authorized.

   `A=000c` means that the Problem-state counter set and the Crypto-activity counter set are authorized.

   `A=000f` means that all four counter sets are authorized.

   More information: For more details, see *z/Architecture The Load-Program-Parameter and the CPU-Measurement Facilities*, SA23-2260.

Example

This example shows how to trigger the message from procfs:

```
# echo p > /proc/sysrq-trigger
# dmesg | grep perf.ee05c5
perf.ee05c5: CPU[0] CPUM_CF: ver=1.2 A=000c E=0008 C=0000
```

In the message, `ver=1.2` means version 1.2 of the z Systems CPU-measurement counter facility.

Because `0x000c = 0x0004 + 0x0008`, the `A=000c` of the example means that the Problem-state counter set and the Crypto-activity counter set are authorized for the LPAR.

cpu0 only: `E=0008` means that only the Crypto-activity counter set is enabled, and the `C=0000` means that neither of the counter sets are activated.

Part 9. Diagnostics and troubleshooting

These resources are useful when diagnosing and solving problems for SUSE Linux Enterprise Server 12 SP3.

Newest version

You can find the newest version of this publication on IBM Knowledge Center at www.ibm.com/support/knowledgecenter/linuxonibm/liaaf/lnz_r_suse.html

Restrictions

For prerequisites and restrictions see the z Systems architecture specific information in the SUSE Linux Enterprise Server 12 SP3 release notes at www.suse.com/releasenotes

When reporting a problem to IBM support, you might be asked to supply a kernel dump. See *Using the Dump Tools on SUSE Linux Enterprise Server 12 SP1*, SC34-2746 for information about how to create dumps.

Chapter 47. Logging I/O subchannel status information

When investigating I/O subchannels, support specialists might request operation status information for the subchannel.

About this task

The channel subsystem offers a logging facility that creates a set of log entries with such information. From Linux, you can trigger this logging facility through sysfs.

The log entries are available through the SE Console Actions Work Area with the View Console Logs function. The entries differ dependent on the device and model that is connected to the subchannel. On the SE, the entries are listed with a prefix that identifies the model. The content of the entries is intended for support specialists.

Procedure

To create a log entry, issue a command of this form:

```
# echo 1 > /sys/devices/css0/<subhannel-bus-id>/logging
```

where <*subchannel-bus-id*> is the bus ID of the I/O subchannel that corresponds to the I/O device for which you want to create a log entry.
To find out how your I/O devices map to subchannels you can use, for example, the **lscss** command.

Example

In this example, first the subchannel for an I/O device with bus ID `0.0.3d07` is identified, then logging is initiated.

```
# lscss -d 0.0.3d07
Device   Subchan.  DevType CU Type Use  PIM PAM POM  CHPIDs
----------------------------------------------------------------------
0.0.3d07 0.0.000c  1732/01 1731/01      80  80  ff   05000000 00000000
# echo 1 > /sys/devices/css0/0.0.000c/logging
```

Chapter 48. Control program identification

For Linux in LPAR mode, you can provide data about the Linux instance to the control program identification (CPI) feature.

The names are used, for example, to identify the Linux instance or the sysplex on the HMC.

You provide data to the CPI feature in two steps:

1. Write values for one or more of the following items to specific sysfs attributes in `/sys/firmware/cpi`:
   - The name of the Linux instance
   - The sysplex name (if applicable)
   - The operating system type
   - The operating system level
2. Transfer the data to the SE, see "Sending system data to the SE" on page 483.

SUSE Linux Enterprise Server sets the system level and the system type for you.

Specifying a system name

Use the `system_name` attribute in the `/sys/firmware/cpi` directory in sysfs to specify a system name for your Linux instance.

About this task

The system name is a string that consists of up to eight characters of the following set: A-Z, 0-9, $, @, #, and blank.

Example

```
# echo LPAR12 > /sys/firmware/cpi/system_name
```

What to do next

To make the setting take effect, transfer the data to the SE (see "Sending system data to the SE" on page 483).

Specifying a sysplex name

Use the `sysplex_name` attribute in the `/sys/firmware/cpi` directory in sysfs to specify a sysplex name.

About this task

The sysplex name is a string that consists of up to eight characters of the following set: A-Z, 0-9, $, @, #, and blank.

Example

```
# echo SYSPLEX1 > /sys/firmware/cpi/sysplex_name
```

What to do next

To make the setting take effect, transfer the data to the SE (see "Sending system data to the SE" on page 483).

Specifying a system type

Linux uses the `/sys/firmware/cpi/system_type` sysfs attribute to identify itself as a Linux instance.

About this task

Unless your distribution sets this value for you, write LINUX to the attribute.

Example

```
# cat /sys/firmware/cpi/system_type
""
# echo LINUX > /sys/firmware/cpi/system_type
```

What to do next

To make the setting take effect, transfer the data to the SE (see "Sending system data to the SE" on page 483).

Specifying the system level

Linux uses the `/sys/firmware/cpi/system_level` sysfs attribute for the kernel version.

About this task

The value has this format:

`0x0000000000<aa><bb><cc>`

where:

<aa>
are two digits for the major version of the kernel.

<bb>
are two digits for the minor version of the kernel.

<cc>
are two digits for the stable version of the kernel.

Example

Linux kernel 3.12 displays as

```
# cat /sys/firmware/cpi/system_level
0x0000000000031200
```

What to do next

To make the setting take effect, transfer the data to the SE (see "Sending system data to the SE" on page 483).

Sending system data to the SE

Use the `set` attribute in the `/sys/firmware/cpi` directory in sysfs to send data to the service element.

About this task

To send the data in attributes `sysplex_name`, `system_level`, `system_name`, and, `system_type` to the SE, write an arbitrary string to the set attribute.

Example

```
# echo 1 > /sys/firmware/cpi/set
```

Chapter 49. Activating automatic problem reporting

You can activate automatic problem reporting for situations where Linux experiences a kernel panic.

Before you begin

- The Linux instance must run in an LPAR.
- You need a hardware support agreement with IBM to report problems to RETAIN.

About this task

Linux uses the Call Home function to send automatically collected problem data to the IBM service organization through the Service Element. Hence a system crash automatically leads to a new Problem Management Record (PMR) which can be processed by IBM service.

Setting up the Call Home support

To set up the Call Home support, load the sclp_async module with the **modprobe** command.

About this task

There are no module parameters for sclp_async.

Procedure

Load the sclp_async module with the modprobe command to ensure that any other required modules are loaded in the correct order:

```
# modprobe sclp_async
```

Activating the Call Home support

When the sclp_async module is loaded, you can control it through the sysctl interface or through procfs.

Procedure

To activate the support, set the `callhome` attribute to `1`. To deactivate the support, set the `callhome` attribute to `0`. Issue a command of this form:

```
# echo <flag> > /proc/sys/kernel/callhome
```

This command is equivalent to the following:

```
# sysctl -w  kernel.callhome=<flag>
```

Linux cannot check whether the Call Home function is supported by the hardware.

Examples

- To activate the Call Home support, issue:

```
# echo 1 > /proc/sys/kernel/callhome
```

- To deactivate the Call Home support, issue:

```
# echo 0 > /proc/sys/kernel/callhome
```

Chapter 50. Avoiding common pitfalls

Common problems and how to avoid them.

Ensuring correct channel path status

Ensure that you varied the channel path offline before you perform a planned task on it.

Tasks that require the channel path to be offline include:

- Pulling out or plugging in a cable on a path.
- Configuring a path off or on at the SE.

To vary the path offline, issue a command of the form:

```
# chchp -v 0 <chpid>
```

where <*chpid*> is the channel path ID.

After the operation completed and the path is available again, vary the path online by using a command of the form:

```
# chchp -v 1 <chpid>
```

Alternatively, you can write `on` or `off` to the channel path `status` attribute in sysfs to vary the path online or offline.

```
# echo on|off > /sys/devices/css0/chp0.<chpid>/status
```

An unplanned change in path availability can occur due to, for example, unplanned cable pulls or a temporary path malfunction. Then, the PIM/PAM/POM values (as obtained through **`lscss`**) might not be as expected. To update the PIM/PAM/POM values, vary one of the paths that lead to the affected devices.

Example:

```
# chchp -v 0 0.12
# chchp -v 1 0.12
```

Rationale: Linux does not always receive a notification (machine check) when the status of a path changes (especially for a path that comes online again). To make sure Linux has up-to-date information about the usable paths, path verification is triggered through the Linux vary operation.

Determining channel path usage

To determine the usage of a specific channel path on LPAR, for example, to check whether traffic is distributed evenly over all channel paths, use the channel path measurement facility.

See “Channel path measurement” on page 14 for details.

Configuring LPAR I/O devices

A Linux LPAR should contain only those I/O devices that it uses.

Limit the I/O devices by:

- Adding only the needed devices to the IOCDS
- Using the cio_ignore kernel parameter to ignore all devices that are not currently in use by this LPAR.

  If more devices are needed later, they can be dynamically removed from the list of devices to be ignored. Use the cio_ignore kernel parameter or the `/proc/cio_ignore` dynamic control to remove devices, see “cio_ignore - List devices to be ignored” on page 684 and “Changing the exclusion list” on page 685.

Rationale: Numerous unused devices can cause:

- Unnecessary high memory usage due to allocation of device structure.
- Unnecessary high load on status changes because hot-plug handling must be done for every device found.

Using cio_ignore

With cio_ignore, essential devices might be hidden.

For example, if Linux does not boot under z/VM and does not show any message except:

```
HCPGIR450W CP entered; disabled wait PSW 00020001 80000000 00000000 00144D7A
```

Check if cio_ignore is used and verify that the console device, which is typically device number 0.0.0009, is not ignored.

Excessive guest swapping

Avoid excessive guest swapping by using the timed page pool size and the static page pool size attributes.

An instance of Linux on z/VM might be swapping and stalling. Setting the timed page pool size and the static page pool size to zero might solve the problem.

```
# echo 0 > /proc/sys/vm/cmm_timed_pages
# echo 0 > /proc/sys/vm/cmm_pages
```

If you see a temporary relief, the guest does not have enough memory. Try increasing the guest memory.

If the problem persists, z/VM might be out of memory.

If you are using cooperative memory management (CMM), unload the cooperative memory management module:

```
# modprobe -r cmm
```

See Chapter 40, “Cooperative memory management,” on page 433 for more details about CMM.

Including service levels of the hardware and the hypervisor

The service levels of the different hardware cards, the LPAR level, and the z/VM service level are valuable information for problem analysis.

If possible, include this information with any problem you report to IBM service.

A `/proc` interface that provides a list of service levels is available. To see the service levels issue:

```
# cat /proc/service_levels
```

Example for a z/VM system with a QETH adapter:

```
# cat /proc/service_levels
VM: z/VM Version 5 Release 2.0, service level 0801 (64-bit)
qeth: 0.0.f5f0 firmware level 087d
```

Booting stops with disabled wait state

An automatic processor type check might stop the boot process with a disabled wait PSW.

On SUSE Linux Enterprise Server 12 SP3, a processor type check is automatically run at every kernel startup. If the check determines that SUSE Linux Enterprise Server 12 SP3 is not compatible with the hardware, it stops the boot process with a disabled wait PSW `0x000a0000/0x8badcccc`.

If this problem occurs, ensure that you are running SUSE Linux Enterprise Server 12 SP3 on supported hardware. See the SUSE Linux Enterprise Server 12 SP3 release notes at www.suse.com/releasenotes.

Preparing for dump-on-panic

You might want to consider setting up your system to automatically create a memory dump after a kernel panic.

Configuring and using dump-on-panic has the following advantages:

- You have a memory dump disk that is prepared ahead of time.
- You do not have to reproduce the problem since a memory dump will be triggered automatically immediately after the failure.

See Chapter 7, “Shutdown actions,” on page 83 for details.

Chapter 51. Displaying system information

You can display information about the resources, and capabilities of your Linux instance and about the hardware and hypervisor on which your Linux instance runs.

Displaying hardware and hypervisor information

You can display information about the physical and virtual hardware on which your Linux instance runs.

Procedure

Issue the following command:

```
# cat /proc/sysinfo
```

The output of the command is divided into several blocks.

- The first two blocks provide information about the mainframe hardware.
- The third block provides information about the LPAR on which the Linux instance runs, either in LPAR mode or as a guest of a hypervisor.
- Further blocks are present only if the Linux instance runs as a guest of a hypervisor. The field names in these sections have a prefix, `VM<nn>`, where *<nn>* is the hypervisor level.

  If the hypervisor runs in LPAR mode, there is only one such block, with prefix `VM00`. If the hypervisor runs as a guest of another hypervisor, there are multiple such blocks with prefixes `VM00`, `VM01`, and so on. The highest prefix number describes the hypervisor that is closest to the Linux instance.

You can use the information from `/proc/sysinfo`, for example, to verify that a guest relocation has taken place.

Example:

```
# cat /proc/sysinfo
Manufacturer:         IBM
...

CPUs Total:           45
...

LPAR Number:          31
...

VM00 Name:            VM310012
VM00 Control Program: z/VM    6.3.0
VM00 Adjustment:      83
VM00 CPUs Total:      2
VM00 CPUs Configured: 2
VM00 CPUs Standby:    0
VM00 CPUs Reserved:   0
```

The following example shows the command output for an instance of Linux on z/VM. For an example for Linux as a KVM guest, see *Device Drivers, Features, and Commands for Linux as a KVM Guest*, SC34-2754. The fields with prefix `VM<nn>` show the following information:

Name shows the name of the z/VM guest virtual machine according to the z/VM directory.

Control Program
shows hypervisor information.

Adjustment
does not show useful information for Linux on z/VM.

CPUs Total
shows the number of virtual CPUs that z/VM provides to Linux.

CPUs Configured
shows the number of virtual CPUs that are online to Linux.

CPUs Standby
shows the number of virtual CPUs that are available to Linux but offline.

CPUs Reserved
shows the number of extra virtual CPUs that z/VM could make available to Linux. This is the difference between the maximum number of CPUs in the z/VM directory entry for the guest virtual machine and the number of CPUs that are currently available to Linux.

Check whether the Linux instance can be a hypervisor

An instance of Linux on z Systems must have the SIE (Start Interpretive Execution) capability to be able to act as a hypervisor, such as a KVM host.

Procedure

1. Issue the following command to find out whether you can operate your Linux instance as a hypervisor.

```
# cat /proc/cpuinfo
vendor_id : IBM/S390
# processors : 1
bogomips per cpu: 14367.00
features : esan3 zarch stfle msa ldisp eimm dfp edat etf3eh
highgprs sie
cache0 : level=1 type=Data scope=Private size=128K
...
```

2. Examine the features line in the command output. If the list of features includes `sie`, the Linux instance can be a hypervisor. The Linux instance of the example can be a hypervisor.

Chapter 52. Kernel messages

z Systems specific kernel modules issue messages on the console and write them to the syslog. SUSE Linux Enterprise Server 12 SP3 issues these messages with message numbers.

Based on these message numbers, you can display man pages to obtain message details.

The message numbers consist of a module identifier, a dot, and six hexadecimal digits. For example, `xpram.ab9aa4` is a message number.

Kernel Messages on SUSE Linux Enterprise Server 12 SP3, SC34-2747 summarizes the messages that are issued by z Systems specific kernel modules on SUSE Linux Enterprise Server 12 SP3. You can find this documentation on developerWorks at www.ibm.com/developerworks/linux/linux390/documentation_suse.html

A summary of messages that are issued by z Systems specific kernel modules is available on the IBM Knowledge Center at

www.ibm.com/support/knowledgecenter/linuxonibm/com.ibm.linux.l0kmsg.doc/l0km_plugin_top.html

Note: Some messages are issued with message numbers although there is no message explanation. These messages are considered self-explanatory and they are not included in this documentation. If you find an undocumented message with a message text that needs further explanation, complete a Readers' Comment Form or send a request to eservdoc@de.ibm.com.

Displaying a message man page

Man page names for z Systems specific kernel messages match the corresponding message numbers.

Before you begin

Ensure that the RPM with the message man pages is installed on your Linux system. This RPM is called kernel-default-man-<*kernel-version*>.s390x.rpm and shipped on DVD1.

Procedure

For example, the following message has the message number `xpram.ab9aa4`:

```
xpram.ab9aa4: 50 is not a valid number of XPRAM devices
```

Enter a command of this form to display a message man page:

```
man <message_number>
```

Example

Enter the following command to display the man page for message `xpram.ab9aa4`:

```
# man xpram.ab9aa4
```

The corresponding man page looks like this example:

```
xpram.ab9aa4(9)                                          xpram.ab9aa4(9)

Message
       xpram.ab9aa4: %d is not a valid number of XPRAM devices

Severity
       Error

Parameters
       @1: number of partitions

Description
       The  number of XPRAM partitions specified for the 'devs' module parame-
       ter or with the 'xpram.parts' kernel parameter must be  an  integer  in
       the range 1 to 32. The XPRAM device driver created a maximum of 32 par-
       titions that are probably not configured as intended.

User action
       If the XPRAM device driver has been  complied  as  a  separate  module,
       unload  the  module and load it again with  a  correct  value  for  the
       'devs' module parameter. If the XPRAM device driver has  been  compiled
       into the kernel, correct the  'xpram.parts'  parameter  in  the  kernel
       parameter line and restart Linux.

LINUX                           Linux Messages                xpram.ab9aa4(9)
```

Viewing messages with the IBM Doc Buddy app

You can view documentation for IBM Z specific Linux kernel messages through an app for mobile devices.

IBM Doc Buddy is helpful in environments from where the message documentation on the internet is not directly accessible.

Before you begin

You can obtain IBM Doc Buddy from Apple App Store or from Google Play. For more information about IBM Doc Buddy, go to http://ibmdocbuddy.mybluemix.net.

Procedure

Perform the following steps to set up IBM Doc Buddy on your mobile device:

1. In your app repository, search for “IBM Doc Buddy”, then download, install, and start the app.
2. Enter the setup mode by tapping the  symbol at the top left corner in the app window.
3. Select Components.
4. Search for “Linux on z Systems” and download the messages component.
5. Close the setup mode.

Results

You can now enter IDs for messages of interest in the main search field and display the message documentation on your mobile device.

Part 10. Reference

Use these commands, kernel parameters, kernel options to configure Linux on z Systems. Be aware of the z/VM DIAG calls required by SUSE Linux Enterprise Server 12 SP3.

Newest version

You can find the newest version of this publication on IBM Knowledge Center at www.ibm.com/support/knowledgecenter/linuxonibm/liaaf/lnz_r_suse.html

Restrictions

For prerequisites and restrictions see the z Systems architecture specific information in the SUSE Linux Enterprise Server 12 SP3 release notes at www.suse.com/releasenotes

Chapter 53. Commands for Linux on z Systems

You can use z Systems specific commands to configure and work with the SUSE Linux Enterprise Server 12 SP3 for z Systems device drivers and features.

Most of these commands are included in the `s390-tools` RPM.

Some commands come with an init script or a configuration file or both. It is assumed that init scripts are installed in `/etc/init.d/`. You can extract any missing files from the `etc` subdirectory in the s390-tools RPM.

Commands described elsewhere

- For the **snipl** command, see Chapter 8, "Remotely controlling virtual hardware - snipl," on page 87. **snipl** is provided as a separate package snipl-<*version*>.s390x.rpm.
- For commands and tools that are related to creating and analyzing system dumps, including the zipl command, see *Using the Dump Tools on SUSE Linux Enterprise Server 12 SP1*, SC34-2746.
- For commands related to terminal access over IUCV connections, see *How to Set up a Terminal Server Environment on z/VM*, SC34-2596.
- The **icainfo** and **icastats** commands are provided with the libica package and described in *libica Programmer's Reference*, SC34-2602.

Generic command options

For simplicity, common command options are omitted from some of the syntax diagrams.

-h or --help
to display help information for the command.

--version
to display version information for the command.

The syntax for these options is:

Common command options

```
►►──<command>──┬─┤ Other command options ├──────────────────────────►◄
               ├─-h──────────────────────┤
               ├─--help──────────────────┤
               └─--version───────────────┘
```

where <*command*> can be any of the Linux on z Systems commands.

See Appendix B, "Understanding syntax diagrams," on page 709 for general information about reading syntax diagrams.

chccwdev - Set CCW device attributes

Use the **chccwdev** command to set attributes for CCW devices and to set CCW devices online or offline.

Use "znetconf - List and configure network devices" on page 679 to work with CCW_GROUP devices. For more information about CCW devices and CCW group devices, see "Device categories" on page 7.

The **chccwdev** command uses cio_settle before it changes anything to ensure that sysfs reflects the latest device status information, and includes newly available devices.

chccwdev syntax

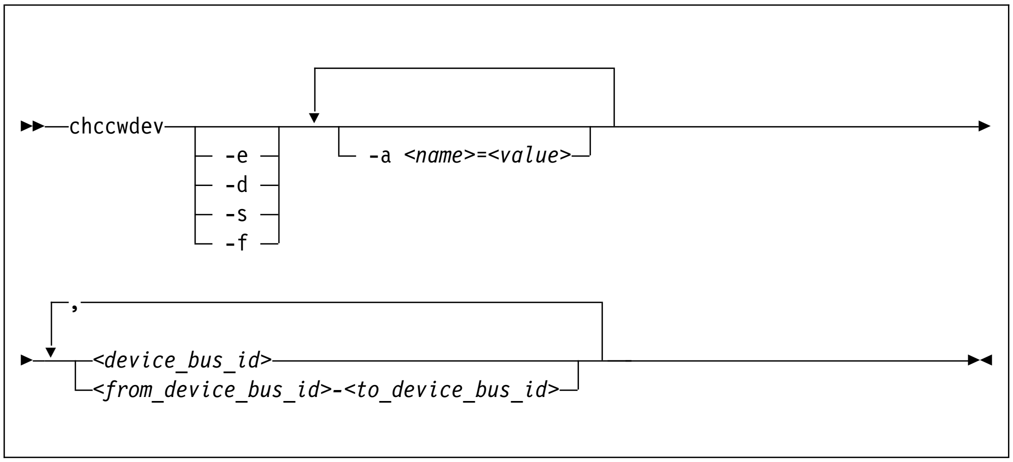

Where:

-e or --online
sets the device online.

-d or --offline
sets the device offline.

-s or --safeoffline
waits until all outstanding I/O requests complete, and then tries to set the device offline. Valid for DASDs only.

-f or --forceonline
forces a boxed device online, if this action is supported by the device driver.

-a or --attribute *<name>*=*<value>*
sets the <*name*> attribute to <*value*>.

The available attributes depend on the device type. See the chapter for your device for details about the applicable attributes and values.

Setting the `online` attribute has the same effect as using the **-e** or **-d** options.

<device_bus_id>
identifies a device. Device bus-IDs are of the form 0.<*n*>.<*devno*>, where <*n*> is a subchannel set ID and <*devno*> is a device number. Input is converted to lowercase.

<from_device_bus_id>-<to_device_bus_id>
identifies a range of devices. If not all devices in the given range exist, the command is limited to the existing ones. If you specify a range with no existing devices, you get an error message.

-h or --help
displays help information for the command. To view the man page, enter **man chccwdev**.

-v or --version
displays version information for the command.

Examples

- To set a CCW device 0.0.b100 online issue:

```
# chccwdev -e 0.0.b100
```

- Alternatively, use **-a** to set a CCW device 0.0.b100 online. Issue:

```
# chccwdev -a online=1 0.0.b100
```

- To set all CCW devices in the range 0.0.b200 through 0.0.b2ff online, issue:

```
# chccwdev -e 0.0.b200-0.0.b2ff
```

- To set a CCW device 0.0.b100 and all CCW devices in the range 0.0.b200 through 0.0.b2ff offline, issue:

```
# chccwdev -d 0.0.b100,0.0.b200-0.0.b2ff
```

- To set several CCW devices in different ranges and different subchannel sets offline, issue:

```
# chccwdev -d 0.0.1000-0.0.1100,0.1.7000-0.1.7010,0.0.1234,0.1.4321
```

- To set devices with bus ID 0.0.0192, and 0.0.0195 through 0.0.0198 offline after completing all outstanding I/O requests:

```
# chccwdev -s 0.0.0192,0.0.0195-0.0.0198
```

  If an outstanding I/O request is blocked, the command might wait forever. Reasons for blocked I/O requests include reserved devices that can be released or disconnected devices that can be reconnected.

  1. Try to resolve the problem that blocks the I/O request and wait for the command to complete.
  2. If you cannot resolve the problem, issue **chccwdev -d** to cancel the outstanding I/O requests. The data will be lost.

- To set an ECKD DASD 0.0.b100 online and to enable extended error reporting and logging issue:

```
# chccwdev -e -a eer_enabled=1 -a erplog=1 0.0.b100
```

chchp - Change channel path status

Purpose

Use the **chchp** command to set channel paths online or offline.

The actions are equivalent to performing a Configure Channel Path Off or Configure Channel Path On operation on the Hardware Management Console.

The channel path status that results from a configure operation is persistent across IPLs.

Note: Changing the configuration state of an I/O channel path might affect the availability of I/O devices. It can also trigger associated functions (such as channel-path verification or device scanning), which in turn can result in a temporary increase in processor, memory, and I/O load.

chchp syntax

```
                                  ,
                                  ┌──────────────────┐
                                  ▼                  │
►►─chchp─┬─ -c ─┬─ 0 ─┬─┬─┬─ 0.<id> ─┬─┬─────────────────────────────►◄
         │      └─ 1 ─┘ │ │         └─┘
         ├─ -v ─┬─ 0 ─┬─┘ │
         │      └─ 1 ─┘   │
         └─ -a <key>=<value>─┘
```

Where:

-c or --configure <*value*>
sets the device to configured (1) or standby (0).

Note: Setting the configured state to standby can stop running I/O operations.

-v or --vary <*value*>
changes the logical channel-path state to online (1) or offline (0).

Note: Setting the logical state to offline can stop running I/O operations.

-a or --attribute <*key*> = <*value*>
changes the channel-path sysfs attribute <*key*> to <*value*>. The <*key*> can be the name of any available channel-path sysfs attribute (that is, `configure` or `status`), while <*value*> can take any valid value that can be written to the attribute (for example, `0` or `offline`). Using `-a` is a generic way of writing to the corresponding sysfs attribute. It is intended for cases where sysfs attributes or attribute values are available in the kernel but not in **chchp**.

0.<*id*> and 0.<*id*> - 0.<*id*>
where <*id*> is a hexadecimal, two-digit, lowercase identifier for the channel path. An operation can be performed on more than one channel path by specifying multiple identifiers as a comma-separated list, or a range, or a combination of both.

--version
displays the version number of **chchp** and exits.

-h or --help
displays a short help text, then exits. To view the man page, enter **man chchp**.

Examples

- To set channel path 0.19 into standby state issue:

```
# chchp -a configure=0 0.19
```

- To set the channel path with the channel path ID 0.40 to the standby state, write 0 to the configure file with the **chchp** command:

```
# chchp --configure 0 0.40
Configure standby 0.40... done.
```

- To set a channel-path to the configured state, write 1 to the configure file with the **chchp** command:

```
# chchp --configure 1 0.40
Configure online 0.40... done.
```

- To set channel-paths 0.65 to 0.6f to the configured state issue:

```
# chchp -c 1 0.65-0.6f
```

- To set channel-paths 0.12, 0.7f and 0.17 to 0.20 to the logical offline state issue:

```
# chchp -v 0 0.12,0.7f,0.17-0.20
```

chcpumf - Set limits for the CPU measurement sampling facility buffer

Use the **chcpumf** command to set limits for the CPU measurement sampling facility buffer.

The sampling facility is designed for autonomous buffer management, and you do not usually need to intervene. However, you might want to change the minimum or maximum size, for example, for one of the following reasons:

- There are considerable resource constraints on your system, and the sampling facility stops because it tries to allocate more buffer space than is available.
- As an expert user of perf and the sampling facility, you want to explore results with particular buffer settings.

chcpumf syntax

```
►►─chcpumf──┬──────┬──┬──────────────┬──────────────────────────────►◄
            └─ -V ─┘  └─ -m <min_sdb> ─┘
                      └─ -x <max_sdb> ─┘
```

where:

-m <*min_sdb*> or --min <*min_sdb*>
: specifies the minimum sampling facility buffer size in sample-data-blocks. A sample-data-block occupies approximately 4 KB. The sampling facility starts with this buffer size if it exceeds the initial buffer size that is calculated by the sampling facility.

-x <*max_sdb*> or --max <*max_sdb*>
: specifies the maximum sampling facility buffer size in sample-data-blocks. A sample-data-block occupies approximately 4 KB. While it is running, the sampling facility dynamically adjusts the buffer size to a suitable value, but cannot exceed this limit.

-V or --verbose
: displays the buffer size settings after the changes.

-v or --version
: displays the version number of **chcpumf** and exits.

-h or --help
: displays out a short help text, then exits. To view the man page, enter **man chcpumf**.

Example

To change the minimum buffer size to 500 times the size of a sample-data-block and the maximum buffer size to 1000 times the size of a sample-data-block , issue:

```
# chcpufm -V -m 500 -x 1000
Sampling buffer sizes:
    Minimum:    500 sample-data-blocks
    Maximum:   1000 sample-data-blocks
```

chmem - Set memory online or offline

Use the **chmem** command to set a particular size or range of memory online or offline.

Setting memory online can fail if the hypervisor does not have enough memory left, for example because memory was overcommitted. Setting memory offline can fail if Linux cannot free the memory. If only part of the requested memory can be set online or offline, a message informs you how much memory was set online or offline instead of the requested amount.

chmem syntax

```
►►─chmem──┬─ -e ─┬─┬─ <size> ──────────┬──────────────────────────────►◄
          └─ -d ─┘ └─ <start>-<end> ───┘
```

Where:

-e or --enable
sets the specified memory online.

-d or --disable
sets the specified memory offline.

<size>
specifies an amount of memory to be set online or offline. A numeric value without a unit or a numeric value immediately followed by `m` or `M` is interpreted as MB (1024 x 1024 bytes). A numeric value immediately followed by `g` or `G` is interpreted as GB (1024 x 1024 x 1024 bytes).

The size must be aligned to the memory block size, as shown in the output of the **lsmem** command.

<start>-<end>
specifies a memory range to be set online or offline. *<start>* is the hexadecimal address of the first byte and *<end>* is the hexadecimal address of the last byte in the memory range.

The range must be aligned to the memory block size, as shown in the output of the **lsmem** command.

-v or --version
displays the version number of **chmem**, then exits.

-h or --help
displays a short help text, then exits. To view the man page, enter **man chmem**.

Examples

- This command requests 1024 MB of memory to be set online.

```
# chmem --enable 1024
```

- This command requests 2 GB of memory to be set online.

```
# chmem --enable 2g
```

- This command requests the memory range that starts with `0x00000000e4000000` and ends with `0x00000000f3ffffff` to be set offline.

```
# chmem --disable 0x00000000e4000000-0x00000000f3ffffff
```

chreipl - Modify the re-IPL configuration

Use the **chreipl** tool to modify the re-IPL configuration for Linux on z Systems. You can configure a particular device as the reboot device.

chreipl syntax

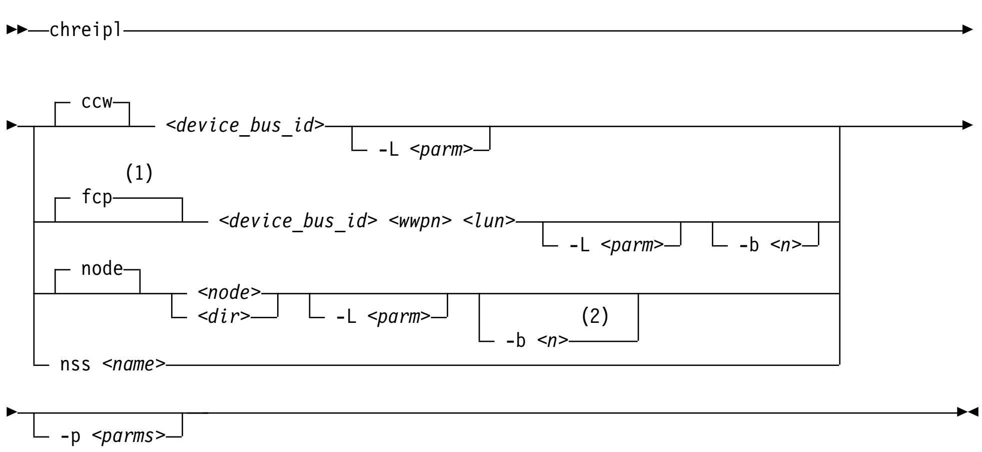

Notes:

1. You can specify the *<device_bus_id>*, *<wwpn>*, and *<lun>* in any order if you use the corresponding command options.
2. For device nodes or directories that map to a SCSI disk.

Where:

<device_bus_id>* or -d *<device_bus_id>* or --device *<device_bus_id>
specifies the device bus-ID of a CCW re-IPL device or of the FCP device through with a SCSI re-IPL device is attached.

<wwpn>* or -w *<wwpn>* or --wwpn *<wwpn>
specifies the worldwide port name (WWPN) of a SCSI re-IPL device.

<lun>* or -l *<lun>* or --lun *<lun>
specifies the logical unit number (LUN) of a SCSI re-IPL device.

<node>
specifies a device node of a DASD, SCSI, or logical device mapper re-IPL device.

<dir>
specifies a directory in the Linux file system on the re-IPL device.

nss
declares that the following parameters refer to a z/VM named saved system (NSS).

Note: You cannot load SUSE Linux Enterprise Server 12 or later from an NSS. The NSS could contain a Linux distribution with NSS support or another mainframe operating system, for example, CMS.

<*name*> or -n <*name*> or --name <*name*>
specifies the name of an NSS as defined on the z/VM system.

Note: You cannot load SUSE Linux Enterprise Server 12 SP3 from an NSS. The NSS could contain a Linux distribution with NSS support or another mainframe operating system, for example, CMS.

-L or --loadparm <*parameter*>

For SUSE Linux Enterprise Server 12 SP3 with a DASD or SCSI boot device, you can specify parameters for GRUB 2 with the syntax **g**<*grub_parameters*>. Typically, <*grub_parameters*> is a specification that selects an item from the GRUB 2 boot menu. For details, see "Specifying GRUB 2 parameters" on page 70.

For DASD, you can also specify a leading `0`, `1`, or `2`.

0 or 1
immediately starts GRUB 2 for booting the target SUSE Linux Enterprise Server 12 SP3 kernel.

2 boots a rescue kernel.

If you omit this specification, GRUB 2 is started after a timeout period has expired.

-b or --bootprog <*n*>
For SUSE Linux Enterprise Server 12 SP3 with a SCSI boot device, you can specify `0`, `1`, or `2`

0 or 1
immediately starts GRUB 2 for booting the target SUSE Linux Enterprise Server 12 SP3 kernel.

2 boots a rescue kernel.

If you omit this specification, GRUB 2 is started after a timeout period has expired.

-p or --bootparms
specifies boot parameters for the next reboot. The boot parameters, which typically are kernel parameters, are appended to the kernel parameter line in the boot configuration. The boot configuration can include up to 895 characters of kernel parameters. The number of characters you can specify in addition for rebooting depends on your environment and re-IPL device as shown in Table 60.

Table 60. Maximum characters for additional kernel parameters

Virtual hardware where Linux runs	DASD re-IPL device	SCSI re-IPL device	NSS re-IPL device
z/VM guest virtual machine	64	3452	56
LPAR	none	3452	n/a

Notes:

- The kernel parameters that you specify for a DASD or NSS re-IPL device are stored with the z/VM PARM parameter.
- The kernel parameters that you specify for a SCSI re-IPL device are stored as SCPDATA.

If you omit this parameter, the existing boot parameters in the next boot configuration are used without any changes.

Important: If the re-IPL kernel is SUSE Linux Enterprise Server 12 or later, be sure not to specify kernel parameters that prevent the target kernel from booting. See "Avoid parameters that break GRUB 2" on page 25.

-h or --help
displays help information for the command. To view the man page, enter **man chreipl**.

-v or --version
displays version information.

For disk-type re-IPL devices, the command accepts but does not require an initial statement:

ccw
declares that the following parameters refer to a DASD re-IPL device.

fcp
declares that the following parameters refer to a SCSI re-IPL device.

node
declares that the following parameters refer to a disk re-IPL device that is identified by a device node or by a directory in the Linux file system on that device. The disk device can be a DASD or a SCSI disk.

Examples

These examples illustrate common uses for **chreipl**.

- The following commands all configure the same DASD as the re-IPL device, assuming that the device bus-ID of the DASD is `0.0.7e78`, that the standard device node is `/dev/dasdc`, that udev created an alternative device node `/dev/disk/by-path/ccw-0.0.7e78`, that `/mnt/boot` is located on the Linux file system in a partition of the DASD.
  - Using the bus ID:
    ```
    # chreipl 0.0.7e78
    ```
  - Using the bus ID and the optional `ccw` statement:
    ```
    # chreipl ccw 0.0.7e78
    ```
  - Using the bus ID, the optional statement and the optional **--device** keyword:
    ```
    # chreipl ccw --device 0.0.7e78
    ```
  - Using the standard device node:
    ```
    # chreipl /dev/dasdc
    ```
  - Using the udev-created device node:
    ```
    # chreipl /dev/disk/by-path/ccw-0.0.7e78
    ```
  - Using a directory within the file system on the DASD:

```
# chreipl /mnt/boot
```

- The following commands all configure the same SCSI disk as the re-IPL device, assuming that the device bus-ID of the FCP device through which the device is attached is `0.0.1700`, the WWPN of the storage server is `0x500507630300c562`, and the LUN is `0x401040b300000000`. Further it is assumed that the standard device node is `/dev/sdb`, that udev created an alternative device node `/dev/disk/by-id/scsi-36005076303ffc56200000000000010b4`, and that `/mnt/fcpboot` is located on the Linux file system in a partition of the SCSI disk.
  - Using bus ID, WWPN, and LUN:

    ```
    # chreipl 0.0.1700 0x500507630300c562 0x401040b300000000
    ```

  - Using bus ID, WWPN, and LUN with the optional `fcp` statement:

    ```
    # chreipl fcp 0.0.1700 0x500507630300c562 0x401040b300000000
    ```

  - Using bus ID, WWPN, LUN, the optional statement, and keywords for the parameters. When you use the keywords, the parameters can be specified in any order:

    ```
    # chreipl fcp --wwpn 0x500507630300c562 -d 0.0.1700 --lun 0x401040b300000000
    ```

  - Using the standard device node:

    ```
    # chreipl /dev/sdb
    ```

  - Using the udev-created device node:

    ```
    # chreipl /dev/disk/by-id/scsi-36005076303ffc56200000000000010b4
    ```

  - Using a directory within the file system on the SCSI disk:

    ```
    # chreipl /mnt/fcpboot
    ```

- To configure a DASD with bus ID `0.0.7e78` as the re-IPL device, using `2` to select a boot option from the GRUB 2 boot menu:

  ```
  # chreipl 0.0.7e78 -L 0g2
  Re-IPL type:  ccw
  Device:       0.0.7e78
  Loadparm:     "0g2"
  Bootparms:    ""
  ```

chshut - Control the system shutdown actions

Use the **chshut** command to change the shutdown actions for specific shutdown triggers.

The shutdown triggers are:

- Halt
- Power off
- Reboot

The shutdown trigger `panic` is handled by the dumpconf service script, see *Using the Dump Tools on SUSE Linux Enterprise Server 12 SP1*, SC34-2746 for details.

Linux on z Systems performs shutdown actions according to sysfs attribute settings within the `/sys/firmware` directory structure. The **chshut** command sets a shutdown action for a shutdown trigger by changing the corresponding sysfs attribute setting. For more information about the sysfs attributes and the shutdown actions, see Chapter 7, "Shutdown actions," on page 83.

chshut syntax

```
►►─chshut──┬─ halt──┬──┬─ ipl──────────────────────────────────►◄
           ├─ poff──┤  ├─ reipl─────────────────────────────────┤
           └─ reboot┘  ├─ stop───────────────────────────────────┤
                       │   ┌──────────────────────────────────┐ │
                       │   ▼                                  │ │
                       └── vmcmd "<cp_command>"─────────────────┘
```

Where:

halt
sets an action for the `halt` shutdown trigger.

poff
sets an action for the `poff` shutdown trigger.

reboot
sets an action for the `reboot` shutdown trigger.

ipl
sets IPL as the action to be taken.

reipl
sets re-IPL as the action to be taken.

stop
sets "stop" as the action to be taken.

vmcmd "<*cp_command*>"
sets the action to be taken to issuing a z/VM CP command. The command must be specified in uppercase characters and enclosed in quotation marks. To issue multiple commands, repeat the `vmcmd` attribute with each command.

-h or --help
displays help information for the command. To view the man page, enter **man chshut**.

-v or --version
displays version information.

Examples

These examples illustrate common uses for **chshut**.

- To make the system start again after a power off:

```
# chshut poff ipl
```

- To log off the z/VM guest virtual machine if the Linux **poweroff** command was run successfully:

```
# chshut poff vmcmd LOGOFF
```

- To send a message to z/VM user ID OPERATOR and automatically log off the z/VM guest virtual machine if the Linux **poweroff** command is run:

```
# chshut poff vmcmd "MSG OPERATOR Going down" vmcmd "LOGOFF"
```

chzcrypt - Modify the cryptographic configuration

Use the **chzcrypt** command to configure cryptographic adapters that are managed by the cryptographic device driver and modify the AP bus attributes.

To display the attributes, use "lszcrypt - Display cryptographic devices" on page 613.

chzcrypt syntax

```
►►─chzcrypt──┬─┬─ -e ─┬─┬─ -a ──────────────────────────┬──────────────────────►◄
             │ └─ -d ─┘ │                                │
             │          └─┬──────────────┬─ <device ID> ─┘│
             │            ▼              │                │
             ├─ -p ──────────────────────┤                │
             │ └─ -n ─┘ └─ -c <timeout> ─┘ └─ -t <time> ─┘│
             └─ -V ───────────────────────────────────────┘
```

Where:

-e or --enable
sets the given cryptographic adapters online.

-d or --disable
sets the given cryptographic adapters offline.

-a or --all
sets all available cryptographic adapters online or offline.

<device ID>
specifies a cryptographic adapter that is to be set online or offline. A cryptographic adapter can be specified either in decimal notation or hexadecimal notation with a '0x' prefix.

-p or --poll-thread-enable
enables the poll thread of the cryptographic device driver.

-n or --poll-thread-disable
disables the poll thread of the cryptographic device driver.

-c *<timeout>* or --config-time *<timeout>*
sets configuration timer for rescanning the AP bus to *<timeout>* seconds.

-t *<time>*or --poll-timeout=*<time>*
sets the high-resolution polling timer to *<time>* nanoseconds. To display the value, use **lszcrypt -b**.

-V or --verbose
displays verbose messages.

-v or --version
displays version information.

-h or --help
displays help information for the command. To view the man page, enter **man chzcrypt**.

Examples

These examples illustrate common uses for **chzcrypt**.

- To set the cryptographic adapters 0, 1, 4, 5, and 12 online (in decimal notation):

```
chzcrypt -e 0 1 4 5 12
```

- To set all available cryptographic adapters offline:

```
chzcrypt -d -a
```

- To set the configuration timer for rescanning the AP bus to 60 seconds and disable the poll thread of the cryptographic device driver:

```
chzcrypt -c 60 -n
```

chzdev - Configure z Systems devices

Use the **chzdev** command to configure devices and device drivers on z Systems. Supported devices include storage devices (DASD and zFCP) and networking devices (QETH and LCS).

Note: For persistent configuration in a production system, use tools provided by SUSE. Changes made with the **chzdev** command might not take effect and can interfere with settings made through SUSE tools.

You can apply configuration changes to the active configuration of the currently running system, or to the persistent configuration stored in configuration files:

- Changes to the active configuration are effective immediately. They are lost on reboot, when a device driver is unloaded, or when a device becomes unavailable.
- Changes to the persistent configuration are applied when the system boots, when a device driver is loaded, or when a device becomes available.

By default, **chzdev** applies changes to both the active and the persistent configuration.

chzdev supports enabling and disabling devices, exporting and importing configuration data to and from a file, and displaying a list of available device types and attributes.

chzdev actions and options

```
►►─chzdev──┬─┬─┤ Attribute settings ├─┬─┬─┤ Device selection      ├─┬─┬─┬─ --persistent --active ─┬─►
           │ ├─ --export <filename> |- ─┤ └─┤ Device type selection ├─┘ │ ├─ --active ──────────┤
           │ ├─ --import <filename> |- ─┤                             │ └─ --persistent ───────┘
           │ └─ --apply ────────────────┘                             │
           └─┬─ --enable ─┬─ Attribute settings ─┬─┤ Device selection ├─┘
             └─ --disable ────────────────────────┘

►─┬─ --dry-run ─┬─┬─ --base <path> |<key=value> ─┬─►
  └─────────────┘ └──────────────────────────────┘

►─┬─ --force ─┬─┬─ --no-root-update ─┬─┬─ --yes ─┬─┬─ --quiet ─┬─►◄
  └───────────┘ └────────────────────┘ └─────────┘ └─ --verbose ─┘
```

Device selection:

```
┌──────────────────────────────────────────────────────────────────────────────►
│  ┌─ <type> ─┬─┬─ <device> ──────────────┬─┬─┬─ --by-attrib <key=value> | <key!=value> ─┬─►
│  │          ▲ ,└─ <from_dev>-<to_dev> ─┘ │ │ ├─ --by-interface <interface> ──────────┤
│  └──────────┘                            │ │ ├─ --by-node <device_node> ─────────────┤
│                                          │ │ ├─ --by-path <path> ────────────────────┤
│                                          │ │ └─ --all ───────────────────────────────┘
│                                          │ ▲
│                                          └─┘

►─┬─ --configured ─┬─┬─ --existing ─┬─┬─ --online ─┬─┤
  └────────────────┘ └──────────────┘ └─ --offline ─┘
```

Device type selection:

```
├─ <type> ─ --type ──────────────────────────────────────────────────────────┤
```

Attribute settings:

```
(1)
┌──────────────────────────────────────────────────────────────────────────────►
│  ┌─ --remove <attrib> ─┬─┬─ <attribute=value> ─┬─┤
│  ▲                     │ │                     │
│  └─────────────────────┘ │                     │
│  └─ --remove-all ────────┘                     │
└────────────────────────────────────────────────┘
```

Notes:

1 Specify at least one of the options

chzdev help functions

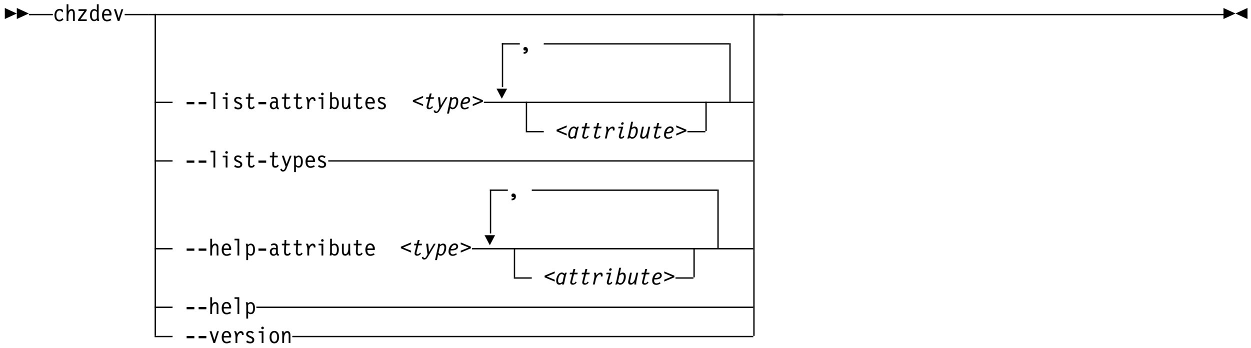

where:

<type>
restricts the scope of an action to the specified device type:

- Specify a device type and optionally a device ID to work on devices with matching type and ID only.
- Specify a device type together with the `--type` option to manage the configuration of the device type itself.

Note:
As a precaution, use the most specific device type when you configure a device by ID. Otherwise, the same device ID might accidentally match other devices of a different subtype. To get a list of supported device types, use the `--list-types` option.

<device>
selects a single device or a range of devices by device ID. Separate multiple IDs or ranges with a comma (,). To select a range of devices, specify the ID of the first and the last device in the range separated by a hyphen (-).

-t or --type *<device_type>*
selects a device type as target for a configuration or query action. For example: dasd-eckd, zfcp, or qeth.

<attribute=value>
specifies a device attribute and its value. To specify multiple attributes, separate attribute-value pairs with a blank.

You can use the `--list-attributes` option to display a list of available attributes and the `--help-attribute` to get more detailed information about a specific attribute.

Tip: To specify an attribute that is not known to **chzdev**, use the `--force` option.

-r or --remove *<attrib>*
removes the setting for attribute *<attrib>*.

Active configuration
For attributes that maintain a list of values, clears all values for that list.

Persistent configuration
Removes any setting for the specified attribute. When the device or device driver is configured again, the attribute is set to its default value.

Some attributes cannot be removed.

-R or --remove-all
removes the settings for all attributes of the selected device or device driver.

Active configuration
For attributes that maintain a list of values, clears all values for that list.

Persistent configuration
Removes all attribute settings that can be removed. When the device or device driver is configured again, the attribute is set to its default value.

Some attributes cannot be removed.

--by-attrib *<attrib=value>* | *<attrib!=value>*
selects devices with a specific attribute, *<attrib>* that has a value of *<value>*. When specified as *<attrib>*!=*<value>*, selects all devices that do not provide an attribute named *<attrib>* with a value of *<value>*.

Tip: You can use the `--list-attributes` option to display a list of available attributes and the `--help-attribute` to get more detailed information about a specific attribute.

--by-interface *<interface>*
selects devices by network interface, for example, eth0. *<interface>* must be the name of an existing networking interface.

--by-node *<device_node>*
selects devices by device node, for example, `/dev/sda`. *<device_node>* must be the path to the device node for a block device or character device.

Note: If *<device_node>* is the device node for a logical device (such as a device mapper device), **lszdev** tries to resolve the corresponding physical device nodes. The **lsblk** tool must be available for this resolution to work.

--by-path *<path>*
selects devices by file-system path, for example, `/usr`. The *<path>* parameter can be the mount point of a mounted file system, or a path on that file system.

Note: If the file system that provides *<path>* is stored on multiple physical devices (such as supported by btrfs), **lszdev** tries to resolve the corresponding physical device nodes. The **lsblk** tool must be available and the file system must provide a valid UUID for this resolution to work.

--all
selects all existing and configured devices.

--configured
narrows the selection to those devices for which a persistent configuration exists.

--existing
narrows the selection to all devices that are present in the active configuration.

--configured --existing
specifying both `--configured` and `--existing` narrows the selection to devices that are present in both configurations, persistent and active.

--online
narrows the selection to devices that are enabled in the active configuration.

--offline
narrows the selection to devices that are disabled in the active configuration.

-a or --active
applies changes to the active configuration only. The persistent configuration is not changed unless you also specify `--persistent`.

Note: Changes to the active configuration are effective immediately. They are lost on reboot, when a device driver is unloaded, or when a device becomes unavailable.

-p or --persistent
applies changes to the persistent configuration only. The persistent configuration takes effect when the system boots, when a device driver is loaded, or when a device becomes available.

--export <*filename*>|-
writes configuration data to a text file called <*filename*>. If a single hyphen (-) is specified instead of a file name, data is written to the standard output stream. The output format of this option can be used with the `--import` option. To reduce the scope of exported configuration data, you can select specific devices, a device type, or define whether to export only data for the active or persistent configuration.

--import <*filename*>|-
reads configuration data from <*filename*> and applies it. If a single hyphen (-) is specified instead of a file name, data is read from the standard input stream. The input format must be the same as the format produced by the `--export` option.

By default, all configuration data that is read is also applied. To reduce the scope of imported configuration data, you can select specific devices, a device type, or define whether to import only data for the active or persistent configuration.

-a or --apply
applies the persistent configuration of all selected devices and device types to the active configuration.

-e or --enable
enables the selected devices. Any steps necessary for the devices to function are taken, for example: create a CCW group device, remove a device from the CIO exclusion list, or set a CCW device online.

Active configuration
Performs all setup steps required for a device to become operational, for example, as a block device or as a network interface.

Persistent configuration
Creates configuration files and settings associated with the selected devices.

-d or --disable
disables the selected devices.

Active configuration
Disables the selected devices by reverting the configuration steps necessary to enable them.

Persistent configuration
Removes configuration files and settings associated with the selected devices.

`--dry-run`
processes the actions and displays command output without changing the configuration of any devices or device types. Combine with `--verbose` to display details about skipped configuration steps.

`--base <path> | <key=value>`
changes file system paths that are used to access files. If *<path>* is specified without an equal sign (=), it is used as base path for accessing files in the active and persistent configuration. If the specified parameter is in *<key=value>* format, only those paths that begin with *<key>* are modified. For these paths, the initial *<key>* portion is replaced with *<value>*.

Example: `lszdev --persistent --base /etc=/mnt/etc`

`-f or --force`
overrides safety checks and confirmation questions, including:

- More than 256 devices selected
- Configuring unknown attributes
- Combining apparently inconsistent settings

`--no-root-update`
skips any additional steps that are required to change the root device configuration persistently. Typically such steps include rebuilding the initial RAM disk, or modifying the kernel command line.

`-y or --yes`
answers all confirmation questions with “yes”.

`-q or --quiet`
prints only minimal run-time information.

`-l or --list-attributes`
lists all supported device or device type attributes, including a short description. Use the `--help-attribute` option to get more detailed information about an attribute.

`-L or --list-types`
lists the name and a short description for all device types supported by chzdev.

`-V or --verbose`
prints additional run-time information.

`-v or --version`
displays the version number of **chzdev**, then exits.

`-h or --help`
displays help information for the command.

`-H or --help-attribute`
displays help information for the command.

Examples

- To enable an FCP device with device number 0.0.198d, WWPN 0x50050763070bc5e3, and LUN 0x4006404600000000, and create a persistent configuration, issue:

```
# chzdev --enable zfcp-lun 0.0.198d:0x50050763070bc5e3:0x4006404600000000
```

- To enable the same FCP device without creating a persistent configuration, issue:

```
# chzdev --enable --active zfcp-lun 0.0.198d:0x50050763070bc5e3:0x4006404600000000
```

- To export configuration data for all FCP devices to a file called `config.txt`, issue:

```
# chzdev zfcp-lun --all --export config.txt
```

- To enable a QETH device and create a persistent configuration, issue:

```
# chzdev --enable qeth 0.0.a000:0.0.a001:0.0.a002
```

- To enable a QETH device without creating a persistent configuration, issue:

```
# chzdev --enable --active qeth 0.0.a000:0.0.a001:0.0.a002
```

- To enable a device that provides networking interface eth0, issue:

```
# chzdev --by-interface eth0 --active
```

- To get help for the QETH-device attribute layer2, issue:

```
# chzdev qeth --help-attribute layer2
```

- To enable DASD 0.0.8000 and create a persistent configuration, issue:

```
# chzdev -e dasd 8000
```

- To enable DASDs 0.0.1000 and 0.0.2000 through 0.0.2010, issue:

```
# chzdev dasd 1000,200-2010 -e
```

- To change the dasd device type parameter eer_pages to 14, issue:

```
# chzdev dasd --type eer_pages=14
```

- To remove the persistent use_diag setting of DASD 0.0.8000, issue:

```
# chzdev dasd 8000 --remove use_diag --persistent
```

- To persistently configure the root device, issue:

```
# chzdev --by-path / --persistent
```

See the man page for information about the command exit codes.

Files used

The **chzdev** command uses these files:

/etc/udev/rules.d/
: **chzdev** creates udev rules to store the persistent configuration of devices. File names start with `41-`.

/etc/modprobe.d/
: **chzdev** creates modprobe configuration files to store the persistent configuration of certain device types. File names start with `s390x-`.

cio_ignore - Manage the I/O exclusion list

Use the **cio_ignore** command to specify I/O devices that are to be ignored by Linux.

When a Linux on z Systems instance boots, it senses and analyzes all available I/O devices. You can use the cio_ignore kernel parameter (see "cio_ignore - List devices to be ignored" on page 684) to specify devices that are to be ignored. This exclusion list can cover all possible devices, even devices that do not actually exist.

The **cio_ignore** command manages this exclusion list on a running Linux instance. You can change the exclusion list and display it in different formats.

cio_ignore syntax

```
                                  ,
                                  v
>>-cio_ignore--+-+- -a -+-+-<device_bus_id>-------------------+-+-------------><
               | |      |  |                                  |
               | +- -r -+  +-<from_device_bus_id>-<to_device_bus_id>-+
               |
               +- -A-----------------------------------------------+
               +- -R-----------------------------------------------+
               +- -l-----------------------------------------------+
               +- -i <device_bus_id>-------------------------------+
               +- -L-----------------------------------------------+
               +- -k-----------------------------------------------+
               +- -u-----------------------------------------------+
               +- -p-----------------------------------------------+
               +- -h-----------------------------------------------+
               +- -v-----------------------------------------------+
```

Where:

-a or --add
adds one or more device specifications to the exclusion list.

When you add specifications for a device that is already sensed and analyzed, there is no immediate effect of adding it to the exclusion list. For example, the device still appears in the output of the **lscss** command and can be set online. However, if the device subsequently becomes unavailable, it is ignored when it reappears. For example, if the device is detached in z/VM, it is ignored when it is attached again.

See the -p option about making devices that are already sensed and analyzed unavailable to Linux.

-r or --remove
removes one or more device specifications from the exclusion list.

When you remove device specifications from the exclusion list, the corresponding devices are sensed and analyzed if they exist. Where possible, the corresponding device driver is informed, and the devices become available to Linux.

<device_bus_id>
identifies a single device.

Device bus-IDs are of the form 0.<*n*>.<*devno*>, where <*n*> is a subchannel set ID and <*devno*> is a device number. If the subchannel set ID is 0, you can abbreviate the specification to the device number, with or without a leading 0x.

Example: The specifications 0.0.0190, 190, 0190, and 0x190 are all equivalent. There is no short form of 0.1.0190.

<from_device_bus_id>-<to_device_bus_id>
identifies a range of devices. *<from_device_bus_id>* and *<to_device_bus_id>* have the same format as *<device_bus_id>*.

-A or --add-all
adds the entire range of possible devices to the exclusion list.

When you add specifications for a device that is already sensed and analyzed, there is no immediate effect of adding it to the exclusion list. For example, the device still appears in the output of the **lscss** command and can be set online. However, if the device subsequently becomes unavailable, it is ignored when it reappears. For example, if the device is detached in z/VM, it is ignored when it is attached again.

See the -p option about making devices that are already sensed and analyzed unavailable to Linux.

-R or --remove-all
removes all devices from the exclusion list.

When you remove device specifications from the exclusion list, the corresponding devices are sensed and analyzed if they exist. Where possible, the corresponding device driver is informed, and the devices become available to Linux.

-l or --list
displays the current exclusion list.

-i or --is-ignored
checks if the specified device is on the exclusion list. The command prints an information message and completes with exit code `0` if the device is on the exclusion list. The command completes with exit code `2` if the device is not on the exclusion list.

-L or --list-not-blacklisted
displays specifications for all devices that are not in the current exclusion list.

-k or --kernel-param
returns the current exclusion list in kernel parameter format.

You can make the current exclusion list persistent across rebooting Linux by using the output of the **cio_ignore** command with the **-k** option as part of the Linux kernel parameter. See Chapter 3, “Kernel and module parameters,” on page 25.

-u or --unused
discards the current exclusion list and replaces it with a specification for all devices that are not online. This includes specification for possible devices that do not actually exist.

-p or --purge
makes all devices that are in the exclusion list and that are currently offline unavailable to Linux. This option does not make devices unavailable if they are online.

-h or --help
displays help information for the command. To view the man page, enter **man cio_ignore**.

-v or --version
displays version information.

Examples

These examples illustrate common uses for **cio_ignore**.

- The following command shows the current exclusion list:

```
# cio_ignore -l
Ignored devices:
=================
0.0.0000-0.0.7e8e
0.0.7e94-0.0.f4ff
0.0.f503-0.0.ffff
0.1.0000-0.1.ffff
0.2.0000-0.2.ffff
0.3.0000-0.3.ffff
```

- The following command shows specifications for the devices that are not on the exclusion list:

```
# cio_ignore -L
Accessible devices:
===================
0.0.7e8f-0.0.7e93
0.0.f500-0.0.f502
```

  The following command checks if `0.0.7e8f` is on the exclusion list:

```
# cio_ignore -i 0.0.7e8f
Device 0.0.7e8f is not ignored.
```

- The following command adds, `0.0.7e8f`, to the exclusion list:

```
# cio_ignore -a 0.0.7e8f
```

  The previous example then becomes:

```
# cio_ignore -L
Accessible devices:
===================
0.0.7e90-0.0.7e93
0.0.f500-0.0.f502
```

  And for `0.0.7e8f` in particular:

```
# cio_ignore -i 0.0.7e8f
Device 0.0.7e8f is ignored.
```

- The following command shows the current exclusion list in kernel parameter format:

```
# cio_ignore -k
cio_ignore=all,!7e90-7e93,!f500-f502
```

cmsfs-fuse - Mount a z/VM CMS file system

Use the **cmsfs-fuse** command to mount the enhanced disk format (EDF) file system on a z/VM minidisk.

In Linux, the minidisk is represented as a DASD and the file system is mounted as a cmsfs-fuse file system. The cmsfs-fuse file system translates the record-based file system on the minidisk into Linux semantics.

Through the cmsfs-fuse file system, the files on the minidisk become available to applications on Linux. Applications can read from and write to files on minidisks. Optionally, the cmsfs-fuse file system converts text files between EBCDIC on the minidisk and ASCII within Linux.

Attention: You can inadvertently damage files and lose data when directly writing to files within the cmsfs-fuse file system. To avoid problems when you write, multiple restrictions must be observed, especially regarding linefeeds (see restrictions for write).

Tip: If you are unsure about how to safely write to a file on the cmsfs-fuse file system, copy the file to a location outside the cmsfs-fuse file system, edit the file, and then copy it back to its original location.

Use **fusermount** to unmount file systems that you mounted with **cmsfs-fuse**. See the **fusermount** man page for details.

Before you begin:

- cmsfs-fuse requires the FUSE library.
- The DASD must be online.
- Depending whether you intend to read, write, or both, you must have the appropriate permissions for the device node.

cmsfs-fuse syntax

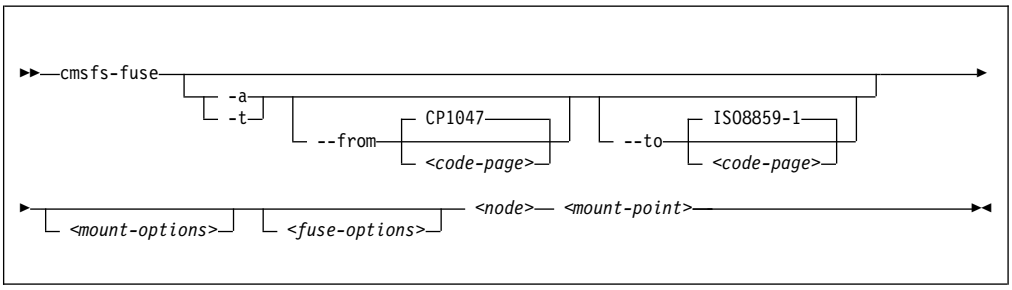

Where:

-a or --ascii
treats all files on the minidisk as text files and converts them from EBCDIC to ASCII.

-t or --filetype
treats files with extensions as listed in the **cmsfs-fuse** configuration file as text files and converts them from EBCDIC to ASCII.

By default, the cmsfs-fuse command uses `/etc/cmsfs-fuse/filetypes.conf` as the configuration file. You can replace the list in this default file by creating a file `.cmsfs-fuse/filetypes.conf` in your home directory.

The `filetypes.conf` file lists one file type per line. Lines that start with a number sign (#) followed by a space are treated as comments and are ignored.

--from <*code-page*>
specifies the encoding of the files on the z/VM minidisk. If this option is not specified, code page CP1047 is used. Enter **iconv --list** to display a list of all available code pages.

--to <*code-page*>
specifies the encoding to which the files on the z/VM minidisk are converted in Linux. If this option is not specified, code page ISO-8859-1 is used. Enter **iconv --list** to display a list of all available code pages.

<*mount-options*>
options as available for the **mount** command. See the **mount** man page for details.

<*fuse-options*>
options for FUSE. The following options are supported by the **cmsfs-fuse** command. To use an option, it must also be supported by the version of FUSE that you have.

-d or -o debug
enables debug output (implies -f).

-f runs the command as a foreground operation.

-o allow_other
allows access to other users.

-o allow_root
allows access to root.

-o nonempty
allows mounts over files and non-empty directories.

-o default_permissions
enables permission checking by the kernel.

-o max_read=<*n*>
sets maximum size of read requests.

-o kernel_cache
caches files in the kernel.

-o [no]auto_cache
enables or disables off caching based on modification times.

-o umask=<*mask*>
sets file permissions (octal).

-o uid=<*n*>
sets the file owner.

-o gid=<*n*>
sets the file group.

-o max_write=<*n*>
sets the maximum size of write requests.

-o max_readahead=<*n*>
sets the maximum readahead value.

-o async_read
performs reads asynchronously (default).

-o sync_read
performs reads synchronously.

-o big_writes
enables write operations with more than 4 KB.

<node>
the device node for the DASD that represents the minidisk in Linux.

<mount-point>
the mount point in the Linux file system where you want to mount the CMS file system.

-h or --help
displays help information for the command. To view the man page, enter **man cmsfs-fuse**.

-v or --version
displays version information for the command.

Extended attributes

You can use the following extended attributes to handle the CMS characteristics of a file:

user.record_format
specifies the format of the file. The format is F for fixed record length files and V for variable record length files. This attribute can be set only for empty files. The default file format for new files is V.

user.record_lrecl
specifies the record length of the file. This attribute can be set only for an empty fixed record length file. A valid record length is an integer in the range 1-65535.

user.file_mode
specifies the CMS file mode of the file. The file mode consists of a mode letter from A-Z and mode number from 0 - 6. The default file mode for new files is A1.

You can use the following system calls to work with extended attributes:

listxattr
to list the current values of all extended attributes.

getxattr
to read the current value of a particular extended attribute.

setxattr
to set a particular extended attribute.

You can use these system calls through the **getfattr** and **setfattr** commands. For more information, see the man pages of these commands and of the listxattr, getxattr, and setxattr system calls.

Restrictions

When you work with files in the cmsfs-fuse file system, restrictions apply for the following system calls:

write Be aware of the following restrictions when you write to a file on the cmsfs-fuse file system:

Write location
Writing is supported only at the end of a file.

Padding
For fixed-length record files, the last record is padded to make up a full record length. The padding character is zero in binary mode and the space character in ASCII mode.

Sparse files
Sparse files are not supported. To prevent the **cp** tool from writing in sparse mode specify `-sparse=never`.

Records and linefeeds with ASCII conversion (-a and -t)

In the ASCII representation of an EBCDIC file, a linefeed character determines the end of a record. Follow these rules about linefeed characters requirements when you write to EBCDIC files in ASCII mode:

For fixed-record length files
Use linefeed characters to separate character strings of the fixed record length.

For variable-record length files
Use linefeed characters to separate character strings. The character strings must not exceed the maximum record length.

The CMS file system does not support empty records. cmsfs-fuse adds a space to records that consist of a linefeed character only.

rename and creat
Uppercase file names are enforced.

truncate
Only shrinking of a file is supported. For fixed-length record files, the new file size must be a multiple of the record length.

Examples

- To mount the CMS file system on the minidisk represented by the file node `/dev/dasde` at `/mnt`:

```
# cmsfs-fuse /dev/dasde /mnt
```

- To mount the CMS file system on the minidisk represented by the file node `/dev/dasde` at `/mnt` and enable EBCDIC to ASCII conversion for text files with extensions as specified in `~/.cmsfs-fuse/filetypes.conf` or `/etc/cmsfs-fuse/filetypes.conf` if the former does not exist:

```
# cmsfs-fuse -t /dev/dasde /mnt
```

- To mount the CMS file system on the minidisk represented by the file node `/dev/dasde` at `/mnt` and allow root to access the mounted file system:

```
# cmsfs-fuse -o allow_root /dev/dasde /mnt
```

- To unmount the CMS file system that was mounted at `/mnt`:

```
# fusermount -u /mnt
```

- To show the record format of a file, PROFILE.EXEC, on a z/VM minidisk that is mounted on `/mnt`:

```
# getfattr -n user.record_format /mnt/PROFILE.EXEC
F
```

- To set record length 80 for an empty fixed record format file, PROFILE.EXEC, on a z/VM minidisk that is mounted on `/mnt`:

```
# setfattr -n user.record_lrecl -v 80 /mnt/PROFILE.EXEC
```

cpacfstats - Monitor CPACF cryptographic activity

Use the **cpacfstats** command to display the number of cryptographic operations that are performed by the Central Processor Assist for Cryptographic Function (CPACF). You can display and enable, disable, or reset specific hardware counters for AES, DES, TDES, SHA, and pseudo random functions.

CPACF performance counters are available on LPARs only.

All counters are initially disabled and must be enabled in the LPAR activation profile on the SE or HMC to measure CPACF activities. There is a slight performance penalty with CPACF counters enabled.

Prerequisites

- libpfm version 4 or later of is required. SUSE Linux Enterprise Server provides the libpfm package.
- On the HMC or SE, authorize the LPAR for each counter set you want to use. Customize the LPAR activation profile and modify the Counter Facility Security Options. You need to activate the "Crypto activity counter set authorization control" checkbox.
- The cpacfstatsd daemon must be running. Check the syslog for the message: `cpacfstatsd: Running`. To start the daemon, issue:

  ```
  # cpacfstatd
  ```

  The daemon requires root privileges to open and work with the perf kernel API functions. Issue **man cpacfstatd** for more information about the daemon.

Note: The counter value is increased once per API call and also for every additional 4096 bytes of data.

Setting up the cpacfstats group

Only root and members of the group cpacfstats are allowed to communicate with the daemon process. You must create the group and add users to it.

1. Create the group cpacfstats:

   ```
   # groupadd cpacfstats
   ```

2. Add all users who are allowed to run the cpacfstats client application to the group:

   ```
   usermod -a -G cpacfstats <user>
   ```

All users in the cpacfstats group are also able to modify the CPACF counter states (enable, disable, reset).

cpacfstats syntax

```
                  ┌─ -p all──────┐
►►─cpacfstats─────┼──────────────┼──────────────────────────────────────►◄
                  ├─ -e <counter>─┤
                  ├─ -d <counter>─┤
                  ├─ -r <counter>─┤
                  └─ -p <counter>─┘
```

Where:

-e or --enable <*counter*>
enables one or all CPACF performance counters. The optional counter argument can be one of:

des counts all DES- and 3DES-related cipher message CPACF instructions.

aes counts all AES-related cipher message CPACF instructions.

sha counts all message digest (that is, SHA-1 through SHA-512) related CPACF instructions.

rng counts all pseudo-random related CPACF instructions.

all counts all CPACF instructions.

If you omit the counter, all performance counters are enabled. Enabling a counter does not reset it. New events are added to the current counter value.

-d or --disable <*counter*>
disables one or all CPACF performance counters. If you omit the counter, all performance counters are disabled. Disabling a counter does not reset it. The counter value is preserved when a counter is disabled, and counting resumes with the preserved value when the counter is re-enabled.

-r or --reset <*counter*>
resets one or all CPACF performance counters. If you omit the counter, all performance counters are reset to 0.

-p or --print <*counter*>
displays the value of one or all CPACF performance counters. If you omit the counter, all performance counters are displayed.

-h or --help
displays help information for the command. To view the command man page, enter **man cpacfstats**.

-v or --version
displays version information for **cpacfstats**.

If no option is specified, the command prints out all the counters (as if **--print all** were specified).

Examples

- To print status and values of all CPACF performance counters:

```
# cpacfstats
des counter: disabled
aes counter: disabled
sha counter: disabled
rng counter: disabled
```

- To enable the AES CPACF performance counter:

```
# cpacfstats --enable aes
aes counter: 0
```

- To enable all CPACF performance counters:

```
# cpacfstats -e
des counter: 0
aes counter: 192
sha counter: 0
rng counter: 0
```

For the already enabled aes counter, the value is not reset.

cpuplugd - Control CPUs and memory

Use the **cpuplugd** command and a set of rules in a configuration file to dynamically enable or disable CPUs. For Linux on z/VM, you can also dynamically add or remove memory.

Rules that are tailored to a particular system environment and the associated workload can increase performance. The rules can include various system load variables.

Note: Do not use **cpuplugd** with NUMA emulation. **cpuplugd** can distort the balance of CPU assignments to NUMA nodes. See Chapter 22, "NUMA emulation," on page 337.

You can start cpuplugd from the command line in two ways:

- With the service utility
- From a command line

Note: Do not run multiple instances of cpuplugd simultaneously.

cpuplugd service utility syntax

If you run the **cpuplugd** daemon through the service utility, you configure the daemon through specifications in the `/etc/sysconfig/cpuplugd` configuration file.

```
►►──service cpuplugd──┬─ start──┬──────────────────────────────────►◄
                      ├─ stop───┤
                      ├─ status─┤
                      └─ restart┘
```

Where:

start
: starts the cpuplugd daemon with the configuration in `/etc/sysconfig/cpuplugd`. Do not run multiple instances of cpuplugd simultaneously. Check the cpuplugd status before starting a new instance.

stop
: stops the cpuplugd daemon.

status
: shows current status of cpuplugd.

restart
: stops and restarts the cpuplugd daemon. Useful to re-read the configuration file when it was changed.

Examples

- To stop a running instance of cpuplugd:

```
# service cpuplugd stop
```

- To display the status:

```
# service cpuplugd status
...
   Active: active (running) ...
```

cpuplugd command-line syntax

You can start cpuplugd through a command interface.

Before you begin: Do not run multiple instances of cpuplugd simultaneously. Check the cpuplugd status through the service utility before you issue the **cpuplugd** command (see "cpuplugd service utility syntax" on page 533).

cpuplugd syntax

```
►►─cpuplugd──┬──────┬──┬──────┬── -c <config file>──────────────────────────►◄
             └─ -f─┘  └─ -V─┘
```

Where:

-c or --config *<config file>*
: specifies the path to the configuration file with the rules (see "Configuration file structure" on page 535).

  After you install cpuplugd for the first time, you can find a sample configuration file at `/etc/sysconfig/cpuplugd`. If you are upgrading from a prior version of cpuplugd, see "Migrating old configuration files" on page 535.

-f or --foreground
: runs cpuplugd in the foreground and not as a daemon. If this option is omitted, cpuplugd runs as a daemon in the background.

-V or --verbose
: displays verbose messages to stdout when cpuplugd is running in the foreground or to syslog when cpuplugd is running as a daemon in the background. This option can be useful for debugging.

-h or --help
: displays help information for the command. To view the command man page, enter **man cpuplugd**. To view the man page for the configuration file, enter **man cpuplugd.conf**.

-v or --version
: displays version information for cpuplugd.

Examples

- To start cpuplugd in daemon mode with a configuration file `/etc/sysconfig/cpuplugd`:

  ```
  # cpuplugd -c /etc/sysconfig/cpuplugd
  ```

- To run cpuplugd in the foreground with verbose messages and with a configuration file `/etc/sysconfig/cpuplugd`:

  ```
  # cpuplugd -V -f -c /etc/sysconfig/cpuplugd
  ```

Configuration file structure

The cpuplugd configuration file can specify rules for controlling the number of active CPUs and for controlling the amount of memory.

The configuration file contains:

- *<variable>*="*<value>*" pairs

  These pairs must be specified within one line. The maximum valid line length is 2048 characters. The values can be decimal numbers or algebraic or Boolean expressions.
- Comments

  Any part of a line that follows a number sign (#) is treated as a comment. There can be full comment lines with the number sign at the beginning of the line or comments can begin in mid-line.
- Empty lines

Attention: These configuration file samples illustrate the syntax of the configuration file. Do not use the sample rules on production systems. Useful rules differ considerably, depending on the workload, resources, and requirements of the system for which they are designed.

Migrating old configuration files

With SUSE Linux Enterprise Server 11 SP2, an enhanced version of cpuplugd has been introduced.

This enhanced version includes extensions to the configuration file and a new sample configuration file, `/etc/sysconfig/cpuplugd`.

If a configuration file from a prior version of cpuplugd already exists at `/etc/sysconfig/cpuplugd`, this file is not replaced but complemented with new variables. The new sample configuration file is then copied to `/var/adm/fillup-templates/sysconfig.cpuplugd`.

The new sample file contains comments that describe the enhanced file layout. View the file to see this information.

Basic configuration file for CPU control

A configuration file for dynamically enabling or disabling CPUs has several required specifications.

The following configuration file sample includes only the required specifications for dynamically enabling or disabling CPUs.

```
UPDATE="10"
CPU_MIN="2"
CPU_MAX="10"

HOTPLUG = "idle < 10.0"
HOTUNPLUG = "idle > 100"
```

Figure 72. Simplified configuration file with CPU hotplug rules

In the configuration file:

UPDATE
specifies the time interval, in seconds, at which cpuplugd evaluates the rules and, if a rule is met, enables or disables CPUs. This variable is also required for controlling memory (see "Basic configuration file for memory control").

In the example, the rules are evaluated every 10 seconds.

CPU_MIN
specifies the minimum number of CPUs. Even if the rule for disabling CPUs is met, cpuplugd does not reduce the number of CPUs to less than this number.

In the example, the number of CPUs cannot become less than 2.

CPU_MAX
specifies the maximum number of CPUs. Even if the rule for enabling CPUs is met, cpuplugd does not increase the number of CPUs to more than this number. If 0 is specified, the maximum number of CPUs is the number of CPUs available on the system.

In the example, the number of CPUs cannot become more than 10.

HOTPLUG
specifies the rule for dynamically enabling CPUs. The rule resolves to a boolean true or false. Each time this rule is true, cpuplugd enables one CPU, unless the number of CPUs has already reached the maximum specified with CPU_MAX.

Setting HOTPLUG to `0` disables dynamically adding CPUs.

In the example, a CPU is enabled when the idle times of all active CPUs sum up to less than 10.0%. See "Keywords for CPU hotplug rules" on page 538 for information about available keywords.

HOTUNPLUG
specifies the rule for dynamically disabling CPUs. The rule resolves to a boolean true or false. Each time this rule is true, cpuplugd disables one CPU, unless the number of CPUs has already reached the minimum specified with CPU_MIN.

Setting HOTUNPLUG to `0` disables dynamically removing CPUs.

In the example, a CPU is disabled when the idle times of all active CPUs sum up to more than 100%. See "Keywords for CPU hotplug rules" on page 538 for information about available keywords.

If one of these variables is set more than once, only the last occurrence is used. These variables are not case sensitive.

If both the HOTPLUG and HOTUNPLUG rule are met simultaneously, HOTUNPLUG is ignored.

Basic configuration file for memory control

For Linux on z/VM, you can also use cpuplugd to dynamically add or take away memory. There are several required specifications for memory control.

The following configuration file sample includes only the required specifications for dynamic memory control.

```
UPDATE="10"
CMM_MIN="0"
CMM_MAX="131072"   # 512 MB
CMM_INC="10240"    #  40 MB

MEMPLUG = "swaprate > 250"
MEMUNPLUG = "swaprate < 10"
```

Figure 73. Simplified configuration file with memory hotplug rules

In the configuration file:

UPDATE
specifies the time interval, in seconds, at which cpuplugd evaluates the rules and, if a rule is met, adds or removes memory. This variable is also required for controlling CPUs (see "Basic configuration file for CPU control" on page 535).

In the example, the rules are evaluated every 10 seconds.

CMM_MIN
specifies the minimum amount of memory, in 4 KB pages, that Linux surrenders to the CMM static page pool (see "Cooperative memory management background" on page 385). Even if the MEMPLUG rule for taking memory from the CMM static page pool and adding it to Linux is met, cpuplugd does not decrease this amount.

In the example, the amount of memory that is surrendered to the static page pool can be reduced to 0.

CMM_MAX
specifies the maximum amount of memory, in 4 KB pages, that Linux surrenders to the CMM static page pool (see "Cooperative memory management background" on page 385). Even if the MEMUNPLUG rule for removing memory from Linux and adding it to the CMM static page pool is met, cpuplugd does not increase this amount.

In the example, the amount of memory that is surrendered to the static page pool cannot become more than 131072 pages of 4 KB (512 MB).

CMM_INC
specifies the amount of memory, in 4 KB pages, that is removed from Linux when the MEMUNPLUG rule is met. Removing memory from Linux increases the amount that is surrendered to the CMM static page pool.

In the example, the amount of memory that is removed from Linux is 10240 pages of 4 KB (40 MB) at a time.

CMM_DEC
Optional: specifies the amount of memory, in 4 KB pages, that is added to Linux when the MEMPLUG rule is met. Adding memory to Linux decreases the amount that is surrendered to the CMM static page pool.

If this variable is omitted, the amount of memory that is specified for CMM_INC is used.

In the example, CMM_DEC is omitted and the amount of memory added to Linux is 10240 pages of 4 KB (40 MB) at a time, as specified with CMM_INC.

MEMPLUG
specifies the rule for dynamically adding memory to Linux. The rule resolves to a boolean true or false. Each time this rule is true, cpuplugd adds the

number of pages that are specified by CMM_DEC, unless the CMM static page pool already reached the minimum that is specified with CMM_MIN.

Setting MEMPLUG to `0` disables dynamically adding memory to Linux.

In the example, memory is added to Linux if there are more than 250 swap operations per second. See "Keywords for memory hotplug rules" on page 539 for information about available keywords.

MEMUNPLUG
specifies the rule for dynamically removing memory from Linux. The rule resolves to a boolean true or false. Each time this rule is true, cpuplugd removes the number of pages that are specified by CMM_INC, unless the CMM static page pool already reached the maximum that is specified with CMM_MAX.

Setting MEMUNPLUG to `0` disables dynamically removing memory from Linux.

In the example, memory is removed from Linux when there are less than 10 swap operations per second. See "Keywords for memory hotplug rules" on page 539 for information about available keywords.

If any of these variables are set more than once, only the last occurrence is used. These variables are not case-sensitive.

If both the MEMPLUG and MEMUNPLUG rule are met simultaneously, MEMUNPLUG is ignored.

CMM_DEC and CMM_INC can be set to a decimal number or to a mathematical expression that uses the same algebraic operators and variables as the MEMPLUG and MEMUNPLUG hotplug rules (see "Keywords for memory hotplug rules" on page 539 and "Writing more complex rules" on page 540).

Predefined keywords

There is a set of predefined keywords that you can use for CPU hotplug rules and a set of keywords that you can use for memory hotplug rules.

All predefined keywords are case sensitive.

Keywords for CPU hotplug rules:

There are predefined keywords for use in the CPU hotplug rules, HOTPLUG and HOTUNPLUG.

loadavg
is the current load average.

onumcpus
is the current number of online CPUs.

runnable_proc
is the current number of runnable processes.

user
is the current CPU user percentage.

nice
is the current CPU nice percentage.

system
is the current CPU system percentage.

idle
is the current CPU idle percentage.

iowait
is the current CPU iowait percentage.

irq
is the current CPU irq percentage.

softirq
is the current CPU softirq percentage.

steal
is the current CPU steal percentage.

guest
is the current CPU guest percentage.

guest_nice
is the current CPU guest_nice percentage.

cpustat.<*name*>
is data from `/proc/stat` and `/proc/loadavg`. In the keyword, <*name*> can be any of the previously listed keywords, for example, `cpustat.idle`. See the proc man page for more details about the data that is represented by these keywords.

With this notation, the keywords resolve to raw timer ticks since system start, not to current percentages. For example, `idle` resolves to the current idle percentage and `cpustat.idle` resolves to the total timer ticks spent idle. See "Using historical data" on page 540 about how to obtain average and percentage values.

`loadavg`, `onumcpus`, and `runnable_proc` are not percentages and resolve to the same values as `cpustat.loadavg`, `cpustat.onumcpus`, and `cpustat.runnable_proc`.

cpustat.total_ticks
is the total number of timer ticks since system start.

time
is the UNIX epoch time in the format "seconds.microseconds".

Percentage values are accumulated for all online CPUs. Hence, the values for the percentages range from 0 to 100 × (number of online CPUs). To get the average percentage per CPU device, divide the accumulated value by the number of CPUs. For example, `idle / onumcpus` yields the average idle percentage per CPU.

Keywords for memory hotplug rules:

There are predefined keywords for use in the memory hotplug rules, MEMPLUG and MEMUNPLUG.

The following keywords are available:

apcr
is the number of page cache operations, pgpin + pgpout, from `/proc/vmstat` in 512-byte blocks per second.

freemem
is the amount of free memory in MB.

swaprate
is the number of swap operations, pswpin + pswpout, from `/proc/vmstat` in 4 KB pages per second.

meminfo.<*name*>
is the value for the symbol <*name*> as shown in the output of **cat /proc/meminfo**. The values are plain numbers but refer to the same units as those used in `/proc/meminfo`.

vmstat.<*name*>
is the value for the symbol <*name*> as shown in the output of **cat /proc/vmstat**.

Using historical data:

Historical data is available for the keyword `time` and the sets of keywords `cpustat.<name>`, `meminfo.<name>`, and `vmstat.<name>`.

See "Keywords for CPU hotplug rules" on page 538 and "Keywords for memory hotplug rules" on page 539 for details about these keywords.

Use the suffixes [<*n*>] to retrieve the data of <*n*> intervals in the past, where <*n*> can be in the range 0 - 100.

Examples

cpustat.idle
yields the current value for the counted idle ticks.

cpustat.idle[1]
yields the idle ticks as counted one interval ago.

cpustat.idle[5]
yields the idle ticks as counted five intervals ago.

cpustat.idle - cpustat.idle[5]
yields the idle ticks during the past five intervals.

time - time[1]
yields the length of an update interval in seconds.

cpustat.total_ticks - cpustat.total_ticks[5]
yields the total number of ticks during the past five intervals.

(cpustat.idle - cpustat.idle[5]) / (cpustat.total_ticks - cpustat.total_ticks[5])
yields the average ratio of idle ticks to total ticks during the past five intervals.

Multiplying this ratio with 100 yields the percentage of idle ticks during the last five intervals.

Multiplying this ratio with 100 * `onumcpus` yields the accumulated percentage of idle ticks for all processors during the last five intervals.

Writing more complex rules

In addition to numbers and keywords, you can use mathematical and Boolean operators, and you can use user-defined variables to specify rules.

- The predefined keywords (see "Predefined keywords" on page 538)
- Decimal numbers
- The mathematical operators
  + addition

- subtraction
* multiplication
/ division
< less than
> greater than

- Parentheses (and) to group mathematical expressions
- The Boolean operators
  & and
  | or
  ! not
- User-defined variables

  You can specify complex calculations as user-defined variables, which can then be used in expressions. User-defined variables are case-sensitive and must not match a pre-defined variable or keyword. In the configuration file, definitions for user-defined variables must precede their use in expressions.

  Variable names consist of alphanumeric characters and the underscore (_) character. An individual variable name must not exceed 128 characters. All user-defined variable names and values, in total, must not exceed 4096 characters.

Examples

- `HOTPLUG = "loadavg > onumcpus + 0.75"`
- `HOTPLUG = "(loadavg > onumcpus + 0.75) & (idle < 10.0)"`
-
```
my_idle_rate = "(cpustat.idle - cpustat.idle[5]) / (cpustat.total_ticks - cpustat.total_ticks[5])"
my_idle_percent_total = "my_idle_rate * 100 * onumcpus"
...
HOTPLUG = "(loadavg > onumcpus + 0.75) & (my_idle_percent_total < 10.0)"
```

Sample configuration file

A typical configuration file includes multiple user-defined variables and values from procfs, for example, to calculate the page scan rate or the cache size.

```
# Required static variables

CPU_MIN="1"
CPU_MAX="0"
UPDATE="1"
CMM_MIN="0"
CMM_MAX="131072" # 512 MB

# User-defined variables

pgscan_d="vmstat.pgscan_direct_dma[0] + vmstat.pgscan_direct_normal[0] + vmstat.pgscan_direct_movable[0]"
pgscan_d1="vmstat.pgscan_direct_dma[1] + vmstat.pgscan_direct_normal[1] + vmstat.pgscan_direct_movable[1]"
# page scan rate in pages / timer tick
pgscanrate="(pgscan_d - pgscan_d1) / (cpustat.total_ticks[0] - cpustat.total_ticks[1])"
# cache usage in kilobytes
avail_cache="meminfo.Cached - meminfo.Shmem"

user_0="(cpustat.user[0] - cpustat.user[1])"
nice_0="(cpustat.nice[0] - cpustat.nice[1])"
system_0="(cpustat.system[0] - cpustat.system[1])"
user_2="(cpustat.user[2] - cpustat.user[3])"
nice_2="(cpustat.nice[2] - cpustat.nice[3])"
system_2="(cpustat.system[2] - cpustat.system[3])"
CP_Active0="(user_0 + nice_0 + system_0) / (cpustat.total_ticks[0] - cpustat.total_ticks[1])"
CP_Active2="(user_2 + nice_2 + system_2) / (cpustat.total_ticks[2] - cpustat.total_ticks[3])"
CP_ActiveAVG="(CP_Active0+CP_Active2) / 2"

idle_0="(cpustat.idle[0] - cpustat.idle[1])"
iowait_0="(cpustat.iowait[0] - cpustat.iowait[1])"
idle_2="(cpustat.idle[2] - cpustat.idle[3])"
iowait_2="(cpustat.iowait[2] - cpustat.iowait[3])"
CP_idle0="(idle_0 + iowait_0) / (cpustat.total_ticks[0] - cpustat.total_ticks[1])"
CP_idle2="(idle_2 + iowait_2) / (cpustat.total_ticks[2] - cpustat.total_ticks[3])"
CP_idleAVG="(CP_idle0 + CP_idle2) / 2"

# More required variables

# cmm_inc: 10% of free memory, in 4K pages
CMM_INC="meminfo.MemFree / 40"
# cmm_dec: 10% of total memory, in 4K pages
CMM_DEC="meminfo.MemTotal / 40"

# Hotplug rules
HOTPLUG="((1 - CP_ActiveAVG) * onumcpus) < 0.08"
HOTUNPLUG="(CP_idleAVG * onumcpus) > 1.15"
MEMPLUG="pgscanrate > 20"
MEMUNPLUG="(meminfo.MemFree + avail_cache) > (meminfo.MemTotal / 10)"
```

Figure 74. Sample configuration file for CPU and memory hotplug

Attention: The sample file of Figure 74 illustrates the syntax of the configuration file. Useful rules might differ considerably, depending on the workload, resources, and requirements of the system for which they are designed.

After you install cpuplugd with the s390-tools RPM, a commented sample configuration file is available at `/etc/sysconfig/cpuplugd`. This file is used by the cpuplugd service.

dasdfmt - Format a DASD

Purpose

Use the **dasdfmt** command to low-level format ECKD-type direct access storage devices (DASD).

dasdfmt uses an ioctl call to the DASD driver to format tracks. A block size (hard sector size) can be specified. The formatting process can take quite a long time (hours for large DASD).

Tips:

- For DASDs that have previously been formatted with the `cdl` or `ldl` disk layout, use the **dasdfmt** quick format mode.
- Use the **-p** option to monitor the progress.

CAUTION:
As on any platform, formatting irreversibly destroys data on the target disk. Be sure not to format a disk with vital data unintentionally.

dasdfmt syntax

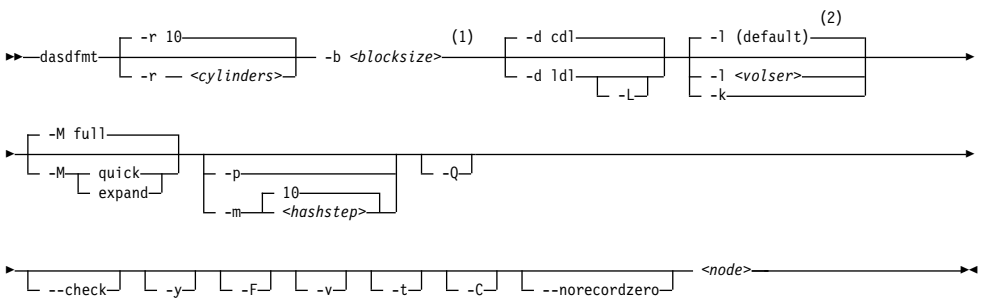

Notes:

1 You are prompted for the block size if you omit it for an option that requires this specification.

2 If neither the -l option nor the -k option are specified, a VOLSER is generated from the device number through which the volume is accessed.

Where:

-r <*cylinders*> or --requestsize=<*cylinders*>
specifies the number of cylinders to be processed in one formatting step. The value must be an integer in the range 1 - 255. The default is 10 cylinders. Use this parameter to use any available PAV devices. Ideally, the number of cylinders matches the number of associated devices, counting the base device and all alias devices.

-b <*block_size*> or --blocksize=<*block_size*>
specifies one of the following block sizes in bytes: 512, 1024, 2048, or 4096.

For the **quick** and **expand** modes and for the **--check** option, you can omit the block size. Otherwise, you are prompted if you do not specify a value for the block size. You can then press Enter to accept 4096 or specify a different value.

Tip: Set <*block_size*> as large as possible (ideally 4096); the net capacity of an ECKD DASD decreases for smaller block sizes. For example, a DASD formatted with a block size of 512 byte has only half of the net capacity of the same DASD formatted with a block size of 4096 byte.

<node>
specifies the device node of the device to be formatted, for example, `/dev/dasdzzz`. See "DASD naming scheme" on page 119 for more details about device nodes).

-d *<disklayout>* or --disk_layout=*<disklayout>*
formats the device with the compatible disk layout (`cdl`) or the Linux disk layout (`ldl`). If the parameter is not specified, the default (`cdl`) is used.

-L or --no_label
valid for `-d ldl` only, where it suppresses the default LNX1 label.

-l *<volser>* or --label=*<volser>*
specifies the volume serial number (see VOLSER) to be written to the disk. If the VOLSER contains special characters, it must be enclosed in single quotation marks. In addition, any '$' character in the VOLSER must be preceded by a backslash ('\').

-k or --keep_volser
keeps the volume serial number when writing the volume label (see VOLSER). Keeping the volume serial number is useful, for example, if the volume serial number was written with a z/VM tool and should not be overwritten.

-M or --mode=*<mode>*
specifies the mode to be used for formatting the device. Valid modes are:

full
Format the entire disk with the specified block size. This is the default mode.

quick
formats the first two tracks and writes label and partition information. Only use this option if you are sure that the target DASD already contains a regular format with the specified block size.

expand
format all unformatted tracks at the end of the target DASD. This mode assumes that tracks at the beginning of the DASD volume have already been correctly formatted, while a consecutive set of tracks at the end are unformatted. You can use this mode to make added space available for Linux use after dynamically increasing the size of a DASD volume.

For the **quick** and **expand** modes, omit the block size specification (**-b** option) to use the existing block size. If you specify a block size, **dasdfmt** checks that the specification matches the existing block size before formatting.

-p or --progressbar
displays a progress bar. Do not use this option if you are using a line-mode terminal console driver. For example, if you are using a 3215 terminal device driver or a line-mode hardware console device driver.

-Q or --percentage
displays one line for each formatted cylinder. The line shows the number of the cylinder and percentage of formatting process. Intended for use by higher level interfaces.

-m <*hashstep*> or --hashmarks=<*hashstep*>
displays a number sign (#) after every <*hashstep*> cylinders are formatted. <*hashstep*> must be in the range 1 - 1000. The default is 10.

The **-m** option is useful where the console device driver is not suitable for the progress bar (**-p** option).

--check
performs a complete format check on a DASD volume.

Omit the block size specification (**-b** option) to check for a consistent format for any valid block size. Specify a block size to confirm that the DASD has been formatted consistently with that particular block size.

-y starts formatting immediately without prompting for confirmation.

-F or --force
formats the device without checking whether it is mounted.

-v displays extra information messages (verbose).

-t or --test
runs the command in test mode. Analyzes parameters and displays what would happen, but does not modify the disk.

-C or --check_host_count
checks the host-access open count to ensure that the device is not online to another operating system instance. Use this option to ensure that the operation is safe, and cancel it if other operating system instances are accessing the volume.

-- norecordzero
prevents a format write of record zero. This option is intended for experts: Subsystems in DASD drivers are by default granted permission to modify or add a standard record zero to each track when needed. Before you revoke the permission with this option, you must ensure that the device contains standard record zeros on all tracks.

-V or --version
displays the version number of **dasdfmt** and exits.

-h or --help
displays an overview of the syntax. Any other parameters are ignored. To view the man page, enter **man dasdfmt**.

Examples

- To format a 100 cylinder z/VM minidisk with the standard Linux disk layout and a 4 KB blocksize with device node `/dev/dasdc`:

```
# dasdfmt -b 4096 -d ldl -p /dev/dasdc
Drive Geometry: 100 Cylinders * 15 Heads =  1500 Tracks

I am going to format the device /dev/dasdc in the following way:
   Device number of device : 0x192
   Labelling device        : yes
   Disk label              : LNX1
   Disk identifier         : 0X0192
   Extent start (trk no)   : 0
   Extent end (trk no)     : 1499
   Compatible Disk Layout  : no
   Blocksize               : 4096
   Mode                    : Full

--->> ATTENTION! <<---
All data of that device will be lost.
Type yes to continue, no will leave the disk untouched: yes
Formatting the device. This may take a while (get yourself a coffee).

cyl   100 of   100 |#################################|100% [1s]

Finished formatting the device.
Rereading the partition table... ok
#
```

- To format the same disk with the compatible disk layout (accepting the default value of the **-d** option).

```
# dasdfmt -b 4096 -p /dev/dasdc
Drive Geometry: 100 Cylinders * 15 Heads =  1500 Tracks

I am going to format the device /dev/dasdc in the following way:
   Device number of device : 0x192
   Labelling device        : yes
   Disk label              : VOL1
   Disk identifier         : 0X0192
   Extent start (trk no)   : 0
   Extent end (trk no)     : 1499
   Compatible Disk Layout  : yes
   Blocksize               : 4096
   Mode                    : Full

--->> ATTENTION! <<---
All data of that device will be lost.
Type yes to continue, no will leave the disk untouched: yes
Formatting the device. This may take a while (get yourself a coffee).

cyl   100 of   100 |#################################|100% [1s]

Finished formatting the device.
Rereading the partition table... ok
#
```

- To make best use of PAV when formatting a DASD that has one base device and four alias devices, specify five cylinders:

```
# dasdfmt /dev/dasdd -y -b 4096 -d cdl -r 5
Finished formatting the device.
Rereading the partition table... ok
```

- To format a previously formatted DASD in quick format mode.

```
# dasdfmt -b 4096 -p --mode=quick /dev/dasdf
```

- To format tracks that have been added at the end of an already formatted DASD.

```
# dasdfmt -b 4096 -p --mode=expand /dev/dasdg
```

- To check whether a DASD has been correctly formatted with a block size of 4096 bytes.

```
# dasdfmt -b 4096 -p --check /dev/dasdg
Checking format of the entire disk...
cyl    1113 of    1113 |################################|100% [19s]
Done. Disk is fine.
```

- To ensure that the DASD is not online to an operating system instance in a different LPAR when you start formatting the DASD:

```
# dasdfmt -b 4096 -p -C /dev/dasdh
```

dasdfmt always checks the host-access open count. If the count indicates access by another operating system instance, the response depends on the **-C** option. With this option, the command is canceled. Otherwise, a warning is displayed before you are prompted to confirm that you want to proceed.

dasdstat - Display DASD performance statistics

Use the **dasdstat** command to display DASD performance statistics, including statistics about Parallel Access Volume (PAV) and High Performance Ficon.

This command includes and extends the performance statistics that is also available through the **tunedasd** command.

dasdstat syntax

```
►►─dasdstat──┬──────┬──┬──────┬──┬──────┬──┬──────────────────┬──►
             │ (1)  │  │ -l   │  │ -V   │  │ -c <colnum>      │
             ├─ -e ─┤  └──────┘  └──────┘  └──────────────────┘
             ├─ -d ─┤
             └─ -r ─┘

►──┬──────────────┬──┬──────────────────┬──┬──────────┬──►◄
   │ -w <width>   │  │ -i <directory>   │  │ <item>   │
   └──────────────┘  └──────────────────┘  └──────────┘
```

Notes:

1 Omit the **-e**, **-d**, and **-r** options to read statistics.

Where:

-e or --enable
starts statistics data collection.

-d or --disable
stops statistics data collection.

-r or --reset
sets the statistics counters to zero.

-l or --long
displays more detailed statistics information, for example, differentiates between read and write requests.

-V or --verbose
displays more verbose command information.

-c <*colnum*> or --columns <*colnum*>
formats the command output in a table with the specified number of columns. The default is 16. Each row gets wrapped after the specified number of lines.

-w <*width*> or --column-width <*width*>
sets the minimum width, in characters, of a column in the output table.

-i <*directory*> or --directory <*directory*>
specifies the directory that contains the statistics. The default is `<mountpoint>/dasd`, where *<mountpoint>* is the mount point of debugfs. You need to specify this parameter if the **dasdstat** command cannot determine this mount point or if the statistics are copied to another location.

<item>
limits the command to the specified items. For *<item>* you can specify:

- `global` for summary statistics for all available DASDs.
- The block device name by which a DASD is known to the DASD device driver.
- The bus ID by which a DASD is known as a CCW device. DASDs that are set up for PAV or HyperPAV have a CCW base device and, at any one time, can have one or more CCW alias devices for the same block device. Alias devices are not permanently associated with the same block device. Statistics that are based on bus ID, therefore, show additional detail for PAV and HyperPAV setups.

If you do not specify any individual item, the command applies to all DASD block devices, CCW devices, and to the summary.

-v or --version
displays the version number of **dasdstat**, then exits.

-h or --help
displays help information for the command.

Examples

- This command starts data collection for dasda, 0.0.b301, and for a summary of all available DASDs.

```
# dasdstat -e dasda 0.0.b301 0.0.b302 global
```

- This command resets the statistics counters for dasda.

```
# dasdstat -r dasda
```

- This command reads the summary statistics:

```
statistics data for statistic: global
start time of data collection: Wed Aug 17 09:52:47 CEST 2011

3508 dasd I/O requests
with 67616 sectors(512B each)
0 requests used a PAV alias device
3458 requests used HPF
  __<4  ___8  __16  __32  __64  _128  _256  _512  __1k  __2k  __4k  __8k  _16k  _32k  _64k 128k
  _256  _512  __1M  __2M  __4M  __8M  _16M  _32M  _64M 128M 256M 512M  __1G  __2G  __4G  _>4G
Histogram of sizes (512B secs)
    0    0 2456  603  304  107   18    9    3    8    0    0    0    0    0    0
    0    0    0    0    0    0    0    0    0    0    0    0    0    0    0
Histogram of I/O times (microseconds)
    0    0    0    0    0    0  100 1738  813  725   30   39   47   15    1    0
    0    0    0    0    0    0    0    0    0    0    0    0    0    0    0    0
Histogram of I/O time till ssch
    0    0  901  558  765   25   28  288  748  161   17   16    1    0    0    0
    0    0    0    0    0    0    0    0    0    0    0    0    0    0    0    0
Histogram of I/O time between ssch and irq
    0    0    0    0    0    0  316 2798  283   13   19   22   41   15    1    0
    0    0    0    0    0    0    0    0    0    0    0    0    0    0    0    0
Histogram of I/O time between irq and end
    0 3023  460    8    4    9    4    0    0    0    0    0    0    0    0    0
    0    0    0    0    0    0    0    0    0    0    0    0    0    0    0    0
# of req in chanq at enqueuing (0..31)
  ___0  ___1  ___2  ___3  ___4  ___5  ___6  ___7  ___8  ___9  __10  __11  __12  __13  __14  __15
  __16  __17  __18  __19  __20  __21  __22  __23  __24  __25  __26  __27  __28  __29  __30  __31
    0 2295  319  247  647    0    0    0    0    0    0    0    0    0    0    0
    0    0    0    0    0    0    0    0    0    0    0    0    0    0    0    0
```

For details about the data items, see “Interpreting the data rows” on page 138.

dasdview - Display DASD structure

Use the **dasdview** command to display DASD information. **dasdview** displays:

- The volume label.
- VTOC details (general information, and the DSCBs of format 1, format 3, format 4, format 5, format 7, format 8, and format 9).
- The content of the DASD, by specifying:
  - Starting point
  - Size

  You can display these values in hexadecimal, EBCDIC, and ASCII format.
- Device characteristics, such as:
  - Whether the data on the DASD is encrypted.
  - Whether the disk is a solid-state device.

If you specify a start point and size, you can also display the contents of a disk dump.

For more information about partitioning, see "The IBM label partitioning scheme" on page 114.

dasdview syntax

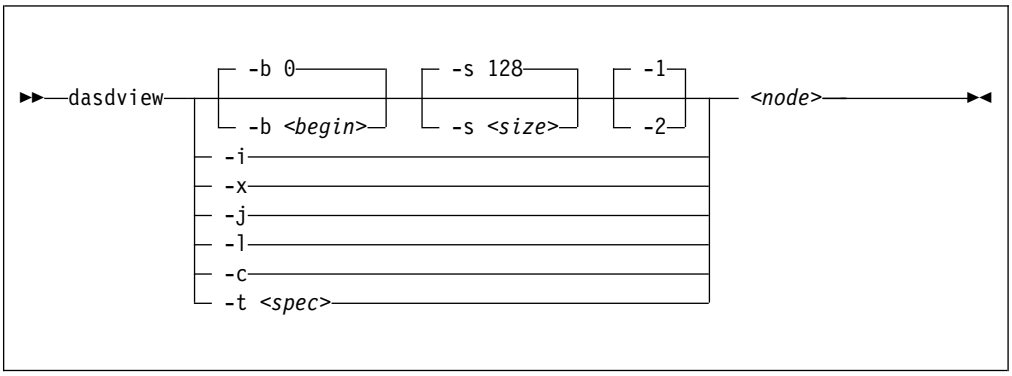

Where:

-b <*begin*> or --begin=<*begin*>
displays disk content on the console, starting from <*begin*>. The contents of the disk are displayed as hexadecimal numbers, ASCII text, and EBCDIC text. If <*size*> is not specified, **dasdview** takes the default size (128 bytes). You can specify the variable <*begin*> as:

```
<begin>[k|m|b|t|c]
```

If the disk is in raw-track access mode, you can specify only track (t) or cylinder (c) entities.

The default for <*begin*> is 0.

dasdview displays a disk dump on the console by using the DASD driver. The DASD driver might suppress parts of the disk, or add information that is not relevant. This discrepancy might occur, for example, when **dasdview** displays the first two tracks of a disk that was formatted with the compatible disk layout option (`-d cdl`). In this situation, the DASD driver pads shorter blocks

with zeros to maintain a constant blocksize. All Linux applications (including **dasdview**) process according to this rule.

Here are some examples of how this option can be used:

```
-b 32   (start printing at Byte 32)
-b 32k  (start printing at kByte 32)
-b 32m  (start printing at MByte 32)
-b 32b  (start printing at block 32)
-b 32t  (start printing at track 32)
-b 32c  (start printing at cylinder 32)
```

-s <*size*> or --size=<*size*>
displays a disk dump on the console, starting at <*begin*>, and continuing for **size**=<*size*>. The contents of the dump are displayed as hexadecimal numbers, ASCII text, and EBCDIC text. If a start value, <*begin*>, is not specified, **dasdview** takes the default. You can specify the variable <*size*> as:

```
size[k|m|b|t|c]
```

If the disk is in raw-track access mode, you can specify only track (t) or cylinder (c) entities.

The default for <*size*> is 128 bytes.

Here are some examples of how this option can be used:

```
-s 16   (use a 16 Byte size)
-s 16k  (use a 16 kByte size)
-s 16m  (use a 16 MByte size)
-s 16b  (use a 16 block size)
-s 16t  (use a 16 track size)
-s 16c  (use a 16 cylinder size)
```

-1 displays the disk dump with format 1 (as 16 Bytes per line in hexadecimal, ASCII and EBCDIC). A line number is not displayed. You can use option **-1** only together with **-b** or **-s**.

Option **-1** is the default.

-2 displays the disk dump with format 2 (as 8 Bytes per line in hexadecimal, ASCII and EBCDIC). A decimal and hexadecimal byte count are also displayed. You can use option **-2** only together with **-b** or **-s**.

-i or --info
displays basic information such as device node, device bus-ID, device type, or geometry data.

-x or --extended
displays the information that is obtained by using the **-i** option, but also open count, subchannel identifier, and so on.

-j or --volser
prints volume serial number (volume identifier).

-l or --label
displays the volume label.

-c or --characteristics
displays model-dependent device characteristics, for example disk encryption status or whether the disk is a solid-state device.

-t <*spec*> or --vtoc=<*spec*>
displays the VTOC's table-of-contents, or a single VTOC entry, on the console. The variable <*spec*> can take these values:

info displays overview information about the VTOC, such as a list of the data set names and their sizes.

f1 displays the contents of all *format 1* data set control blocks (DSCBs).
f3 displays the contents of all (z/OS-specific) *format 3* DSCBs.
f4 displays the contents of all *format 4* DSCBs.
f5 displays the contents of all *format 5* DSCBs.
f7 displays the contents of all *format 7* DSCBs.
f8 displays the contents of all *format 8* DSCBs.
f9 displays the contents of all *format 9* DSCBs.
all displays the contents of *all* DSCBs.

<node>
specifies the device node of the device for which you want to display information, for example, `/dev/dasdzzz`. See "DASD naming scheme" on page 119 for more details about device nodes.

`-v or --version`
displays version number on console, and exit.

`-h or --help`
displays short usage text on console. To view the man page, enter **`man dasdview`**.

Examples

- To display basic information about a DASD:

```
# dasdview -i /dev/dasdzzz
```

This example displays:

```
--- general DASD information ----------------------------------------------------
device node            : /dev/dasdzzz
busid                  : 0.0.0193
type                   : ECKD
device type            : hex 3390       dec 13200

--- DASD geometry ---------------------------------------------------------------
number of cylinders    : hex 64         dec 100
tracks per cylinder    : hex f          dec 15
blocks per track       : hex c          dec 12
blocksize              : hex 1000       dec 4096
#
```

- To display device characteristics:

```
# dasdview -c /dev/dasda
```

This example displays:

```
encrypted disk         : no
```

- To include extended information:

```
# dasdview -x /dev/dasdzzz
```

This example displays:

```
--- general DASD information ----------------------------------------------------
device node            : /dev/dasdzzz
busid                  : 0.0.0193
type                   : ECKD
device type            : hex 3390       dec 13200

--- DASD geometry ---------------------------------------------------------------
number of cylinders    : hex 64         dec 100
tracks per cylinder    : hex f          dec 15
blocks per track       : hex c          dec 12
blocksize              : hex 1000       dec 4096

--- extended DASD information ---------------------------------------------------
real device number     : hex 452bc08    dec 72530952
subchannel identifier  : hex e          dec 14
CU type  (SenseID)     : hex 3990       dec 14736
CU model (SenseID)     : hex e9         dec 233
device type  (SenseID) : hex 3390       dec 13200
device model (SenseID) : hex a          dec 10
open count             : hex 1          dec 1
req_queue_len          : hex 0          dec 0
chanq_len              : hex 0          dec 0
status                 : hex 5          dec 5
label_block            : hex 2          dec 2
FBA_layout             : hex 0          dec 0
characteristics_size   : hex 40         dec 64
confdata_size          : hex 100        dec 256

characteristics        : 3990e933 900a5f80  dff72024 0064000f
                         e000e5a2 05940222  13090674 00000000
                         00000000 00000000  24241502 dfee0001
                         0677080f 007f4a00  1b350000 00000000

configuration_data     : dc010100 4040f2f1  f0f54040 40c9c2d4
                         f1f3f0f0 f0f0f0f0  f0c6c3f1 f1f30509
                         dc000000 4040f2f1  f0f54040 40c9c2d4
                         f1f3f0f0 f0f0f0f0  f0c6c3f1 f1f30500
                         d4020000 4040f2f1  f0f5c5f2 f0c9c2d4
                         f1f3f0f0 f0f0f0f0  f0c6c3f1 f1f3050a
                         f0000001 4040f2f1  f0f54040 40c9c2d4
                         f1f3f0f0 f0f0f0f0  f0c6c3f1 f1f30500
                         00000000 00000000  00000000 00000000
                         00000000 00000000  00000000 00000000
                         00000000 00000000  00000000 00000000
                         00000000 00000000  00000000 00000000
                         00000000 00000000  00000000 00000000
                         00000000 00000000  00000000 00000000
                         800000a1 00001e00  51400009 0909a188
                         0140c009 7cb7efb7  00000000 00000800
#
```

- To display volume label information:

```
# dasdview -l /dev/dasdzzz
```

This example displays:

```
--- volume label -----------------------------------------------------------------
volume label key        : ascii  'åÖÖñ'
                        : ebcdic 'VOL1'
                        : hex    e5d6d3f1

volume label identifier : ascii  'åÖÖñ'
                        : ebcdic 'VOL1'
                        : hex    e5d6d3f1

volume identifier       : ascii  'ðçðñùó'
                        : ebcdic '0X0193'
                        : hex    f0e7f0f1f9f3

security byte           : hex    40


VTOC pointer            : hex    0000000101
                                 (cyl 0, trk 1, blk 1)

reserved                : ascii  '@@@@@'
                        : ebcdic '     '
                        : hex    4040404040

CI size for FBA         : ascii  '@@@@'
                        : ebcdic '    '
                        : hex    40404040

blocks per CI (FBA)     : ascii  '@@@@'
                        : ebcdic '    '
                        : hex    40404040

labels per CI (FBA)     : ascii  '@@@@'
                        : ebcdic '    '
                        : hex    40404040

reserved                : ascii  '@@@@'
                        : ebcdic '    '
                        : hex    40404040

owner code for VTOC     : ascii  '@@@@@@@@@@@@@@'
                          ebcdic '              '
                          hex    40404040 40404040  40404040 4040

reserved                : ascii  '@@@@@@@@@@@@@@@@@@@@@@@@@@@@@@@@'
                          ebcdic '                                '
                          hex    40404040 40404040  40404040 40404040
                                 40404040 40404040  40404040 40
#
```

- To display partition information:

```
# dasdview -t info /dev/dasdzzz
```

This example displays:

```
--- VTOC info ------------------------------------------------------------------
The VTOC contains:
  3 format 1 label(s)
  1 format 4 label(s)
  1 format 5 label(s)
  0 format 7 label(s)
  0 format 8 label(s)
  0 format 9 label(s)
Other S/390 and zSeries operating systems would see the following data sets:
 +----------------------------------------------+--------------+--------------+
 | data set                                     | start        | end          |
 +----------------------------------------------+--------------+--------------+
 | LINUX.V0X0193.PART0001.NATIVE                |          trk |          trk |
 | data set serial number : '0X0193'            |            2 |          500 |
 | system code            : 'IBM LINUX    '     |      cyl/trk |      cyl/trk |
 | creation date          :  year 2001, day 317 |        0/  2 |       33/  5 |
 +----------------------------------------------+--------------+--------------+
 | LINUX.V0X0193.PART0002.NATIVE                |          trk |          trk |
 | data set serial number : '0X0193'            |          501 |          900 |
 | system code            : 'IBM LINUX    '     |      cyl/trk |      cyl/trk |
 | creation date          :  year 2001, day 317 |       33/  6 |       60/  0 |
 +----------------------------------------------+--------------+--------------+
 | LINUX.V0X0193.PART0003.NATIVE                |          trk |          trk |
 | data set serial number : '0X0193'            |          901 |         1499 |
 | system code            : 'IBM LINUX    '     |      cyl/trk |      cyl/trk |
 | creation date          :  year 2001, day 317 |       60/  1 |       99/ 14 |
 +----------------------------------------------+--------------+--------------+
#
```

- To display VTOC information:

```
# dasdview -t f4 /dev/dasdzzz
```

This example displays:

```
--- VTOC format 4 label -------------------------------------------------------
DS4KEYCD    : 0404040404040404040404040404040404040404040404040404040404040404...
DS4IDFMT    : dec 244, hex f4
DS4HPCHR    : 0000000105 (cyl 0, trk 1, blk 5)
DS4DSREC    : dec 7, hex 0007
DS4HCCHH    : 00000000 (cyl 0, trk 0)
DS4NOATK    : dec 0, hex 0000
DS4VTOCI    : dec 0, hex 00
DS4NOEXT    : dec 1, hex 01
DS4SMSFG    : dec 0, hex 00
DS4DEVAC    : dec 0, hex 00
DS4DSCYL    : dec 100, hex 0064
DS4DSTRK    : dec 15, hex 000f
DS4DEVTK    : dec 58786, hex e5a2
DS4DEVI     : dec 0, hex 00
DS4DEVL     : dec 0, hex 00
DS4DEVK     : dec 0, hex 00
DS4DEVFG    : dec 48, hex 30
DS4DEVTL    : dec 0, hex 0000
DS4DEVDT    : dec 12, hex 0c
DS4DEVDB    : dec 0, hex 00
DS4AMTIM    : hex 0000000000000000
DS4AMCAT    : hex 000000
DS4R2TIM    : hex 0000000000000000
res1        : hex 0000000000
DS4F6PTR    : hex 0000000000
DS4VTOCE    : hex 01000000000100000001
              typeind    : dec 1, hex 01
              seqno      : dec 0, hex 00
              llimit     : hex 00000001 (cyl 0, trk 1)
              ulimit     : hex 00000001 (cyl 0, trk 1)
res2        : hex 00000000000000000000
DS4EFLVL    : dec 0, hex 00
DS4EFPTR    : hex 0000000000 (cyl 0, trk 0, blk 0)
res3        : hex 000000000000000000
#
```

- To print the contents of a disk to the console starting at block 2 (volume label):

```
# dasdview -b 2b -s 128 /dev/dasdzzz
```

This example displays:

```
+----------------------------------------+------------------+------------------+
| HEXADECIMAL                            | EBCDIC           | ASCII            |
|  01....04 05....08  09....12 13....16  | 1.............16 | 1.............16 |
+----------------------------------------+------------------+------------------+
|  E5D6D3F1 E5D6D3F1  F0E7F0F1 F9F34000  | VOL1VOL10X0193?. | ??????????????@. |
|  00000101 40404040  40404040 40404040  | ................ | ................ |
|  40404040 40404040  40404040 40404040  | ???????????????? | @@@@@@@@@@@@@@@@ |
|  40404040 40404040  40404040 40404040  | ???????????????? | @@@@@@@@@@@@@@@@ |
|  40404040 40404040  40404040 40404040  | ???????????????? | @@@@@@@@@@@@@@@@ |
|  40404040 88001000  10000000 00808000  | ????h........... | @@@@?........... |
|  00000000 00000000  00010000 00000200  | ................ | ................ |
|  21000500 00000000  00000000 00000000  | ?............... | !............... |
+----------------------------------------+------------------+------------------+
#
```

- To display the contents of a disk on the console starting at block 14 (first FMT1 DSCB) with format 2:

```
# dasdview -b 14b -s 128 -2 /dev/dasdzzz
```

This example displays:

```
 +---------------+---------------+----------------------+----------+----------+
 |     BYTE      |     BYTE      |     HEXADECIMAL      | EBCDIC   | ASCII    |
 |    DECIMAL    | HEXADECIMAL   | 1 2 3 4   5 6 7 8    | 12345678 | 12345678 |
 +---------------+---------------+----------------------+----------+----------+
 |         57344 |          E000 | D3C9D5E4  E74BE5F0   | LINUX.V0 | ?????K?? |
 |         57352 |          E008 | E7F0F1F9  F34BD7C1   | X0193.PA | ?????K?? |
 |         57360 |          E010 | D9E3F0F0  F0F14BD5   | RT0001.N | ??????K? |
 |         57368 |          E018 | C1E3C9E5  C5404040   | ATIVE??? | ?????@@@ |
 |         57376 |          E020 | 40404040  40404040   | ???????? | @@@@@@@@ |
 |         57384 |          E028 | 40404040  F1F0E7F0   | ????10X0 | @@@@???? |
 |         57392 |          E030 | F1F9F300  0165013D   | 193.???? | ???.?e?= |
 |         57400 |          E038 | 63016D01  0000C9C2   | ??_?..IB | c?m?..?? |
 |         57408 |          E040 | D440D3C9  D5E4E740   | M?LINUX? | ?@?????@ |
 |         57416 |          E048 | 40404065  013D0000   | ??????.. | @@@e?=.. |
 |         57424 |          E050 | 00000000  88001000   | ....h.?. | ....?.?. |
 |         57432 |          E058 | 10000000  00808000   | ?....??. | ?....??. |
 |         57440 |          E060 | 00000000  00000000   | ........ | ........ |
 |         57448 |          E068 | 00010000  00000200   | .?....?. | .?....?. |
 |         57456 |          E070 | 21000500  00000000   | ?.?..... | !.?..... |
 |         57464 |          E078 | 00000000  00000000   | ........ | ........ |
 +---------------+---------------+----------------------+----------+----------+
#
```

- To see what is at block 1234 (in this example there is nothing there):

```
# dasdview -b 1234b -s 128 /dev/dasdzzz
```

This example displays:

```
+---------------------------------------+------------------+------------------+
| HEXADECIMAL                           | EBCDIC           | ASCII            |
|  01....04 05....08  09....12 13....16 | 1.............16 | 1.............16 |
+---------------------------------------+------------------+------------------+
|  00000000 00000000  00000000 00000000 | ................ | ................ |
|  00000000 00000000  00000000 00000000 | ................ | ................ |
|  00000000 00000000  00000000 00000000 | ................ | ................ |
|  00000000 00000000  00000000 00000000 | ................ | ................ |
|  00000000 00000000  00000000 00000000 | ................ | ................ |
|  00000000 00000000  00000000 00000000 | ................ | ................ |
|  00000000 00000000  00000000 00000000 | ................ | ................ |
|  00000000 00000000  00000000 00000000 | ................ | ................ |
+---------------------------------------+------------------+------------------+
#
```

- To try byte 0 instead:

```
# dasdview -b 0 -s 64 /dev/dasdzzz
```

This example displays:

```
+---------------------------------------+------------------+------------------+
| HEXADECIMAL                           | EBCDIC           | ASCII            |
|  01....04 05....08  09....12 13....16 | 1.............16 | 1.............16 |
+---------------------------------------+------------------+------------------+
|  C9D7D3F1 000A0000  0000000F 03000000 | IPL1............ | ????............ |
|  00000001 00000000  00000000 40404040 | ................ | ................ |
|  40404040 40404040  40404040 40404040 | ???????????????? | @@@@@@@@@@@@@@@@ |
|  40404040 40404040  40404040 40404040 | ???????????????? | @@@@@@@@@@@@@@@@ |
+---------------------------------------+------------------+------------------+
#
```

- To display the contents of a disk on the console starting at cylinder 2 and printing one track of data:

```
# dasdview -b 2c -s 1t /dev/dasdk
```

This example displays:

```
+---------------------------------------+------------------+------------------+
| HEXADECIMAL                           | EBCDIC           | ASCII            |
|  01....04 05....08  09....12 13....16 | 1............16 | 1............16 |
+---------------------------------------+------------------+------------------+
|  52B7DBEE D6B9530B  0179F420 CB6EA95E | ????O?????4??>z; | R?????S??y???n?^ |
|  EF49C03C 513542E7  D8F17D9D 06DC44F7 | ??{????XQ1'????7 | ?I?<Q5B???}???D? |

...
|  92963D5B 0200B0FA  53745C12 C3B45125 | ko?$?........... | ??=[?........... |
|  0D6040C2 F933381E  7A4C4797 F40FEDAB | ?-?B9???:<?p4??? | ??@??38?zLG????? |
...
```

- To display the full record information of the same disk when it in raw-track access mode:

```
# dasdview -b 2c -s 1t /dev/dasdk
```

This example displays:

```
cylinder 2, head 0, record 0
+-------------------------------------------------------------------------------+
| count area:                                                                   |
|          hex: 0002000000000008                                                |
|     cylinder:                2                                                |
|         head:                0                                                |
|       record:                0                                                |
|   key length:                0                                                |
|  data length:                8                                                |
+-------------------------------------------------------------------------------+
| key area:                                                                     |
| HEXADECIMAL                              | EBCDIC           | ASCII            |
|  01....04 05....08  09....12 13....16    | 1.............16 | 1.............16 |
+------------------------------------------+------------------+------------------+
+------------------------------------------+------------------+------------------+
| data area:                                                                    |
| HEXADECIMAL                              | EBCDIC           | ASCII            |
|  01....04 05....08  09....12 13....16    | 1.............16 | 1.............16 |
+------------------------------------------+------------------+------------------+
|  00000000 00000000                       | ................ | ................ |
+------------------------------------------+------------------+------------------+

cylinder 2, head 0, record 1
+-------------------------------------------------------------------------------+
| count area:                                                                   |
|          hex: 0002000001000200                                                |
|     cylinder:                2                                                |
|         head:                0                                                |
|       record:                1                                                |
|   key length:                0                                                |
|  data length:              512                                                |
+-------------------------------------------------------------------------------+
| key area:                                                                     |
| HEXADECIMAL                              | EBCDIC           | ASCII            |
|  01....04 05....08  09....12 13....16    | 1.............16 | 1.............16 |
+------------------------------------------+------------------+------------------+
+------------------------------------------+------------------+------------------+
| data area:                                                                    |
| HEXADECIMAL                              | EBCDIC           | ASCII            |
|  01....04 05....08  09....12 13....16    | 1.............16 | 1.............16 |
+------------------------------------------+------------------+------------------+
|  52B7DBEE D6B9530B  0179F420 CB6EA95E    | ????O?????4??>z; | R?????S??y???n?^ |
|  EF49C03C 513542E7  D8F17D9D 06DC44F7    | ??{????XQ1'?????7 | ?I?<Q5B???}???D? |
...
+------------------------------------------+------------------+------------------+

cylinder 2, head 0, record 2
+-------------------------------------------------------------------------------+
| count area:                                                                   |
|          hex: 0002000002000200                                                |
|     cylinder:                2                                                |
|         head:                0                                                |
|       record:                2                                                |
|   key length:                0                                                |
|  data length:              512                                                |
+-------------------------------------------------------------------------------+
| key area:                                                                     |
| HEXADECIMAL                              | EBCDIC           | ASCII            |
|  01....04 05....08  09....12 13....16    | 1.............16 | 1.............16 |
+------------------------------------------+------------------+------------------+
+------------------------------------------+------------------+------------------+
| data area:                                                                    |
| HEXADECIMAL                              | EBCDIC           | ASCII            |
|  01....04 05....08  09....12 13....16    | 1.............16 | 1.............16 |
+------------------------------------------+------------------+------------------+
|  92963D5B 0200B0FA  53745C12 C3B45125    | ko?$?.^???*?C??? | ??=[?.??St\???Q% |
|  0D6040C2 F933381E  7A4C4797 F40FEDAB    | ?-?B9???:<?p4??? | ??@??38?zLG????? |
...
```

- To display the contents of a disk, which is in raw-access mode, printing one track of data from the start of the disk:

```
# dasdview -s 1t /dev/dasdk
```

This example displays:

```
cylinder 0, head 0, record 0
+-------------------------------------------------------------------------------+
| count area:                                                                   |
|          hex: 0000000000000008                                                |
|     cylinder:                0                                                |
|         head:                0                                                |
|       record:                0                                                |
|   key length:                0                                                |
|  data length:                8                                                |
+-------------------------------------------------------------------------------+
| key area:                                                                     |
| HEXADECIMAL                              | EBCDIC           | ASCII            |
|  01....04 05....08  09....12 13....16    | 1.............16 | 1.............16 |
+-----------------------------------------+------------------+------------------+
+-----------------------------------------+------------------+------------------+
| data area:                                                                    |
| HEXADECIMAL                              | EBCDIC           | ASCII            |
|  01....04 05....08  09....12 13....16    | 1.............16 | 1.............16 |
+-----------------------------------------+------------------+------------------+
|  00000000 00000000                       | ................ | ................ |
+-----------------------------------------+------------------+------------------+

cylinder 0, head 0, record 1
+-------------------------------------------------------------------------------+
| count area:                                                                   |
|          hex: 0000000001040018                                                |
|     cylinder:                0                                                |
|         head:                0                                                |
|       record:                1                                                |
|   key length:                4                                                |
|  data length:               24                                                |
+-------------------------------------------------------------------------------+
| key area:                                                                     |
| HEXADECIMAL                              | EBCDIC           | ASCII            |
|  01....04 05....08  09....12 13....16    | 1.............16 | 1.............16 |
+-----------------------------------------+------------------+------------------+
|  C9D7D3F1                                | IPL1............ | ????............ |
+-----------------------------------------+------------------+------------------+
| data area:                                                                    |
| HEXADECIMAL                              | EBCDIC           | ASCII            |
|  01....04 05....08  09....12 13....16    | 1.............16 | 1.............16 |
+-----------------------------------------+------------------+------------------+
|  000A0000 0000000F  03000000 00000001    | .?.....??......? | .?.....??......? |
|  00000000 00000000                       | ................ | ................ |
+-----------------------------------------+------------------+------------------+
...
```

fdasd – Partition a DASD

Use the **fdasd** command to manage partitions on ECKD-type DASD that were formatted with the compatible disk layout.

See "dasdfmt - Format a DASD" on page 543 for information about formatting a DASD. With **fdasd** you can create, change and delete partitions, and also change the volume serial number.

fdasd checks that the volume has a valid volume label and VTOC. If either is missing or incorrect, **fdasd** re-creates it. See "z Systems compatible disk layout" on page 115 for details about the volume label and VTOC.

Calling **fdasd** with a node, but without options, enters interactive mode. In interactive mode, you are given a menu through which you can display DASD information, add or remove partitions, or change the volume identifier. Your changes are not written to disk until you type the "write" option on the menu. You can quit without altering the disk at any time before this.

For more information about partitions, see "The IBM label partitioning scheme" on page 114.

Before you begin:

- To partition a SCSI disk, use **fdisk** rather than **fdasd**.
- The disk must be formatted with **dasdfmt**, using the compatible disk layout.

Attention: Careless use of **fdasd** can result in loss of data.

fdasd syntax

```
>>──fdasd──┬─┬─ -s ─┬─┬─ -C ─┬─┬──────────────────────────────────┬──── <node> ────>>
           │ │  -r  │ │      │ │ ┌─ -a ──┬──────────────────┐     │
           │ └──────┘ │      │ │ │       │ ┌─ -k ──────────┐  │     │
           │          │      │ │ │       │ │               (1)  │     │
           │          │      │ │ │       │ └─ -l <volser> ─┘  │     │
           │          │      │ │ │ -c <conf_file> ────────────┤     │
           │          │      │ │ │ -i ────────────────────────┤     │
           │          │      │ │ └─ -p ────────────────────────┘     │
```

Notes:

1 If neither the -l option nor the -k option is specified, a VOLSER is generated from the device number through which the volume is accessed.

Where:

-s or --silent
suppresses messages.

-r or --verbose
displays additional messages that are normally suppressed.

-a or --auto
auto-creates one partition using the whole disk in non-interactive mode.

-k or --keep_volser
keeps the volume serial number when writing the volume label (see "Volume label" on page 116). Keeping the volume serial number is useful, for example, if the volume serial number was written with a z/VM tool and should not be overwritten.

-l <*volser*> or --label <*volser*>
specifies the volume serial number (see VOLSER).

A volume serial consists of one through six alphanumeric characters or the following special characters:

$ # @ %

All other characters are ignored. Avoid using special characters in the volume serial. Special characters can cause problems accessing a disk by VOLSER. If you must use special characters, enclose the VOLSER in single quotation marks. In addition, any '$' character in the VOLSER must be preceded by a backslash ('\').

For example, specify:

```
-l 'a@b\$c#'
```

to get:

```
A@B$C#
```

VOLSER is interpreted as an ASCII string and is automatically converted to uppercase, padded with blanks and finally converted to EBCDIC before it is written to disk.

Do not use the following reserved volume serials:

- SCRTCH
- PRIVAT
- MIGRAT
- Lnnnnn (L followed by a five-digit number)

The reserved volume serials are used as keywords by other operating systems, such as z/OS.

Omitting this parameter causes **fdasd** to prompt for it, if it is needed.

-c <*conf_file*> or --config <*conf_file*>
creates partitions, in non-interactive mode, according to specifications in the configuration file <*conf_file*>.

For each partition you want to create, add one line of the following format to <*conf_file*>:

[<*first_track*>,<*last_track*>,<*type*>]

<*first_track*> and <*last_track*> are required and specify the first and last track of the partition. You can use the keyword **first** for the first possible track on the disk and the keyword **last** for the last possible track on the disk.

<*type*> describes the partition type and is one of:

native
for partitions to be used for Linux file systems.

gpfs
for partitions to be used as part of an Elastic Storage file system setup.

swap
for partitions to be used as swap devices.

raid
for partitions to be used as part of a RAID setup.

lvm
for partitions to be used as part of a logical volume group.

The type specification is optional. If the type is omitted, `native` is used.

The type describes the intended use of a partition to tools or other operating systems. For example, swap partitions could be skipped by backup programs. How Linux actually uses the partition depends on how the partition is formatted and set up. For example, a partition of type `native` can still be used in an LVM logical volume or in a RAID configuration.

Example: With the following sample configuration file you can create three partitions:

```
[first,1000,raid]
[1001,2000,swap]
[2001,last]
```

-i or --volser
displays the volume serial number and exits.

-p or --table
displays the partition table and exits.

<node>
specifies the device node of the DASD you want to partition, for example, `/dev/dasdzzz`. See "DASD naming scheme" on page 119 for more details about device nodes.

-C or --check_host_count
checks the host-access open count to ensure that the device is not online to another operating system instance. The operation is canceled if another operating system instance is accessing the device.

-v or --version
displays the version of **fdasd**.

-h or --help
displays a short help text, then exits. To view the man page, enter **man fdasd**.

fdasd menu

If you call **fdasd** in the interactive mode (that is, with just a node), a menu is displayed.

```
Command action
   m print this menu
   p print the partition table
   n add a new partition
   d delete a partition
   v change volume serial
   t change partition type
   r re-create VTOC and delete all partitions
   u re-create VTOC re-using existing partition sizes
   s show mapping (partition number - data set name)
   q quit without saving changes
   w write table to disk and exit

Command (m for help):
```

fdasd menu commands

Use the **fdasd** menu commands to modify or view information about DASDs.

m redisplays the **fdasd** command menu.

p displays information about the DASD and any partitions on the DASD.

DASD information:

- Number of cylinders
- Number of tracks per cylinder
- Number of blocks per track
- Block size
- Volume label
- Volume identifier
- Number of partitions defined

Partition information:

- Linux node
- Start track
- End track
- Number of tracks
- Partition ID
- Partition type

There is also information about the free disk space that is not used for a partition.

n adds a partition to the DASD. You are asked to give the start track and the length or end track of the new partition.

d deletes a partition from the DASD. You are asked which partition to delete.

v changes the volume identifier. You are asked to enter a new volume identifier. See VOLSER for the format.

t changes the partition type. You are prompted for the partition to be changed and for the new partition type.

Changing the type changes the disk description but does not change the disk itself. How Linux uses the partition depends on how the partition is formatted and set up. For example, as an LVM logical volume or in a RAID configuration.

The partition type describes the partition to other operating systems so that; for example, swap partitions can be skipped by backup programs.

r re-creates the VTOC and deletes all partitions.

u re-creates all VTOC labels without removing all partitions. Existing partition sizes are reused. This option is useful to repair damaged labels or migrate partitions that are created with older versions of **fdasd**.

s displays the mapping of partition numbers to data set names. For example:

```
Command (m for help): s

device .........: /dev/dasdzzz
volume label ...: VOL1
volume serial ..: 0X0193

WARNING: This mapping may be NOT up-to-date,
         if you have NOT saved your last changes!

/dev/dasdzzz1  -  LINUX.V0X0193.PART0001.NATIVE
/dev/dasdzzz2  -  LINUX.V0X0193.PART0002.NATIVE
/dev/dasdzzz3  -  LINUX.V0X0193.PART0003.NATIVE
```

q quits **fdasd** without updating the disk. Any changes that you have made (in this session) are discarded.

w writes your changes to disk and exits. After the data is written, Linux rereads the partition table.

Example using the menu

This example shows how to use **fdasd** to create two partitions on a z/VM minidisk, change the type of one of the partitions, save the changes, and check the results.

This example shows you how to format a z/VM minidisk with the compatible disk layout. The minidisk has device number 193.

1. Call **fdasd**, specifying the minidisk:

```
# fdasd /dev/dasdzzz
```

fdasd reads the existing data and displays the menu:

```
reading volume label: VOL1
reading vtoc : ok

Command action
   m print this menu
   p print the partition table
   n add a new partition
   d delete a partition
   v change volume serial
   t change partition type
   r re-create VTOC and delete all partitions
   u re-create VTOC re-using existing partition sizes
   s show mapping (partition number - data set name)
   q quit without saving changes
   w write table to disk and exit
Command (m for help):
```

2. Use the p option to verify that no partitions are created yet on this DASD:

```
Command (m for help): p

Disk /dev/dasdzzz:
  cylinders ............: 100
  tracks per cylinder ..: 15
  blocks per track .....: 12
  bytes per block ......: 4096
  volume label .........: VOL1
  volume serial ........: 0X0193
  max partitions .......: 3

 ------------------------------- tracks -------------------------------
               Device      start      end   length   Id  System
                                2     1499     1498       unused
```

3. Define two partitions, one by specifying an end track and the other by specifying a length. (In both cases the default start tracks are used):

```
Command (m for help): n
First track (1 track = 48 KByte) ([2]-1499):
Using default value 2
Last track or +size[c|k|M] (2-[1499]): 700
You have selected track 700
```

```
Command (m for help): n
First track (1 track = 48 KByte) ([701]-1499):
Using default value 701
Last track or +size[c|k|M] (701-[1499]): +400
You have selected track 1100
```

4. Check the results by using the `p` option:

```
Command (m for help): p

Disk /dev/dasdzzz:
  cylinders ............: 100
  tracks per cylinder ..: 15
  blocks per track .....: 12
  bytes per block ......: 4096
  volume label .........: VOL1
  volume serial ........: 0X0193
  max partitions .......: 3

 ------------------------------- tracks -------------------------------
               Device      start      end   length   Id  System
        /dev/dasdzzz1          2      700      699    1  Linux native
        /dev/dasdzzz2        701     1100      400    2  Linux native
                            1101     1499      399       unused
```

5. Change the type of a partition:

```
Command (m for help): t

Disk /dev/dasdzzz:
  cylinders ............: 100
  tracks per cylinder ..: 15
  blocks per track .....: 12
  bytes per block ......: 4096
  volume label .........: VOL1
  volume serial ........: 0X0193
  max partitions .......: 3

 ------------------------------- tracks -------------------------------
               Device      start      end   length   Id  System
        /dev/dasdzzz1          2      700      699    1  Linux native
        /dev/dasdzzz2        701     1100      400    2  Linux native
                            1101     1499      399       unused

change partition type
partition id (use 0 to exit):
```

Enter the ID of the partition you want to change; in this example partition 2:

```
partition id (use 0 to exit): 2
```

6. Enter the new partition type; in this example type 2 for swap:

```
current partition type is: Linux native

    1 Linux native
    2 Linux swap
    3 Linux raid
    4 Linux lvm

new partition type: 2
```

7. Check the result:

```
Command (m for help): p


Disk /dev/dasdzzz:
  cylinders ............: 100
  tracks per cylinder ..: 15
  blocks per track .....: 12
  bytes per block ......: 4096
  volume label .........: VOL1
  volume serial ........: 0X0193
  max partitions .......: 3

 ------------------------------- tracks -------------------------------
               Device      start      end   length   Id  System
        /dev/dasdzzz1          2      700      699    1  Linux native
        /dev/dasdzzz2        701     1100      400    2  Linux swap
                            1101     1499      399       unused
```

8. Write the results to disk with the `w` option:

```
Command (m for help): w
writing VTOC...
rereading partition table...
#
```

Example using options

You can partition a DASD by using the **-a** or **-c** option without entering the menu mode.

This method is useful for partitioning with scripts, for example, if you need to partition several hundred DASDs.

With the `-a` option you can create one large partition on a DASD:

```
# fdasd -a /dev/dasdzzz
auto-creating one partition for the whole disk...
writing volume label...
writing VTOC...
rereading partition table...
#
```

This command creates a partition as follows:

```
        Device      start      end   length   Id  System
  /dev/dasdzzz1         2     1499     1498    1  Linux native
```

Using a configuration file, you can create several partitions. For example, the following configuration file, `config`, creates three partitions:

```
[first,500]
[501,1100,swap]
[1101,last]
```

Submitting the command with the `-c` option creates the partitions:

```
# fdasd -c config /dev/dasdzzz
parsing config file 'config'...
writing volume label...
writing VTOC...
rereading partition table...
#
```

This command creates partitions as follows:

```
        Device      start      end   length   Id  System
  /dev/dasdzzz1         2      500      499    1  Linux native
  /dev/dasdzzz2       501     1100      600    2  Linux native
  /dev/dasdzzz3      1101     1499      399    3  Linux native
```

hmcdrvfs - Mount a FUSE file system for remote access to media in the HMC media drive

Use the **hmcdrvfs** command for read-only access to contents in a DVD, CD, or USB-attached storage in the media drive of an HMC.

Before you begin:

- The fuse.hmcdrvfs file system needs access to device node `/dev/hmcdrv`. This node is created automatically when the hmcdrv kernel module is loaded, see Chapter 29, "HMC media device driver," on page 367.
- On the HMC, the media must be assigned to the associated system image (use menu Access Removable Media).
- In a z/VM environment, the z/VM guest virtual machine must have at least privilege class B. The media must be assigned to the LPAR where the z/VM hypervisor runs.
- For Linux in LPAR mode, the LPAR activation profile must allow issuing SCLP requests.

With the media assigned to your Linux instance, this command creates a `fuse.hmcdrvfs` file system with the media content at the specified mount point.

To unmount file systems that you mounted with **hmcdrvfs**, you can use **fusermount**, whether root or non-root user. See the **fusermount** man page for details.

hmcdrvfs syntax

```
►►─hmcdrvfs── <mount-point>──────────────────────────────────────►
►──┬──────────────────────┬──┬──────────────────┬──┬──────────────┬──►◄
  └─ <fuse.hmcdrvfs-options>─┘  └─ <mount-options>─┘  └─ <fuse-options>─┘
```

Where:

-o or --opt
FUSE or mount command options; for the FUSE options see the following lists, for mount options see the **mount** man page.

<fuse.hmcdrvfs-options>
options specific to the `fuse.hmcdrvfs` file system:

-o hmclang=*<language>*
specifies the language setting on the HMC; for valid values, see the **locale** man page.

-o hmctz=*<time zone>*
specifies the time zone setting on the HMC; for valid values, see the **tzset** man page.

<mount-options>
options as available for the **mount** command. See the **mount** man page for details.

<fuse-options>
options for FUSE. The following options are supported by the **cmsfs-fuse** command. To use an option, it must also be supported by the version of FUSE that you have.

-d or -o debug
enables debug output (implies **-f**).

-f runs the command as a foreground operation.

-s disables multi-threaded operation.

-o allow_other
allows access to the file system by other users.

-o allow_root
allows access to the file system by root.

-o nonempty
allows mounts over files and non-empty directories.

-o default_permissions
enables permission checking by the kernel.

-o fsname=<*name*>
sets the file system name.

-o subtype=<*type*>
sets the file system type.

-o max_read=<*n*>
sets maximum size of read requests.

-o direct_io
uses direct I/O.

-o kernel_cache
caches files in the kernel.

-o [no]auto_cache
enables or disables caching based on modification times.

-o umask=<*mask*>
sets file permissions (octal).

-o uid=<*n*>
sets the file owner.

-o gid=<*n*>
sets the file group.

-o entry_timeout=<*secs*>
sets the cache timeout for names. The default is 1.0 second.

-o attr_timeout=<*secs*>
sets the cache timeout for attributes. The default is 1.0 second.

-o ac_attr_timeout=<*secs*>
sets the auto cache timeout for attributes. The default is the `attr_timeout` value.

-o max_readahead=<*n*>
sets the maximum read ahead value.

-o async_read
performs reads asynchronously (default).

-o sync_read
performs reads synchronously.

-o no_remote_lock
disables remote file locking.

-o intr
allows requests to be interrupted

-o intr_signal=<*num*>
specifies the signal to send on interrupt.

-v or --version
displays version information for the command.

-h or --help
displays a short help text, then exits. To view the man page, enter **man hmcdrvfs**.

The following options for mount policy can be set in the file `/etc/ fuse.conf` file:

mount_max=<*number*>
sets the maximum number of FUSE mounts allowed for non-root users. The default is 1000.

user_allow_other
allows non-root users to specify the `allow_other` or `allow_root` mount options.

Examples

- To mount the contents of the HMC media drive at `/mnt/hmc` without any special options, use:

```
# hmcdrvfs /mnt/hmc
```

- If the hmcdrv kernel module is not loaded, load it before you issue the **hmcdrvfs** command:

```
# modprobe hmcdrv
# hmcdrvfs /mnt/hmc
```

- To translate the UID and GID of files on the HMC media drive to your system users and groups along with overriding the permissions, issue, for example:

```
# hmcdrvfs /mnt/hmc -o uid=500 -o gid=1000 -o umask=0337
```

- To speed up transfer rates to frequently accessed directories, use the cache timeout option:

```
# hmcdrvfs /mnt/hmc -o entry_timeout=60
```

- If the HMC is in a different timezone and is configured for a different language use, for example:

```
# hmcdrvfs /mnt/hmc -o hmclang=de_DE -o hmctz=Europe/Berlin
```

- To also disregard any Daylight Saving Time, specifying hours west of the Prime Meridian (Coordinated Universal Time):

```
# hmcdrvfs /mnt/hmc -o hmclang=de_DE -o hmctz="GMT-1"
```

- To unmount the HMC media drive contents mounted on `/mnt/hmc`, issue:

```
# fusermount -u /mnt/hmc
```

hyptop - Display hypervisor performance data

Use the **hyptop** command to obtain a dynamic real-time view of a hypervisor environment on z Systems.

It works with both the z/VM hypervisor and the LPAR hypervisor, Processor Resource/Systems Manager™ (PR/SM). Depending on the available data, it shows, for example, CPU and memory information about LPARs or z/VM guest virtual machines.

System names provided by hyptop are either LPAR names as shown on the SE or HMC, or z/VM guest IDs that identify z/VM guest virtual machines.

The **hyptop** command provides two main windows:

- A list of systems that the hypervisor is currently running (sys_list).
- One system in more detail (sys).

You can run **hyptop** in interactive mode (default) or in batch mode with the **-b** option.

Before you begin:

- The debugfs file system must be mounted, see "debugfs" on page xiii.
- The Linux kernel must have the required support to provide the performance data. Check that `/sys/kernel/debug/s390_hypfs` is available after you mount debugfs.
- The hyptop user must have read permission for the required debugfs files:
  - z/VM: `/sys/kernel/debug/s390_hypfs/diag_2fc`
  - z/VM: `<debugfs mount point>/s390_hypfs/diag_0c`
    (Required only for management time data, identifiers `m` and `M`. See "z/VM fields" on page 578)
  - LPAR: `/sys/kernel/debug/s390_hypfs/diag_204`
- You can always monitor the guest operating system where **hyptop** is running. To monitor any other operating system instances running on the same hypervisor as **hyptop**, you will need additional permissions:
  - For z/VM: The guest virtual machine must be assigned privilege class B.
  - For LPAR: On the HMC or SE security menu of the LPAR activation profile, select the **Global performance data control** check box.

hyptop syntax

```
                 ┌─ -w sys_list─┐
►►─hyptop────────┤              ├──┬──────────────────────────────────────►
                 └─ -w sys──────┘  │      ┌──────┐
                                   │      ▼      │
                                   └─ -s ──<system>──┘

►──┬──────────────────────────────────────────────────────────────────────►
  │      ┌──────────────────────┐   │ ┌─ -S <field>─┐   │      ┌──────┐
  │      ▼                      │   │ │             │   │      ▼      │
  └─ -f ──<field>──┬──────────┬──┘   │ │             │   └─ -t ──┬─CP─┬──┘
                   └─:<unit>──┘      │ │             │           ├─IFL─┤
                                     │ │             │           └─UN──┘

►──┬─ -b─┬──┬─ -d <seconds>─┬──┬─ -n <iterations>─┬──────────────────────►◄
   │     │  │               │  │                  │
   └─────┘  └───────────────┘  └──────────────────┘
```

Where:

-w <*window name*> or --window=<*window name*>
selects the window to display, either sys or sys_list. Use the options **--sys**, **--fields**, and **--sort** to modify the current window. The last window that is specified with the **--window** option is used as the start window. The default window is sys_list.

-s <*system*> or --sys=<*system*>
selects systems for the current window. If you specify this option, only the selected systems are shown in the window. For the sys window, you can specify only one system. <*system*> can be an LPAR name as shown on the SE or HMC, or it can be a z/VM guest ID that identifies a z/VM guest virtual machine. Enter **hyptop** without any options to display the names of all available systems.

-f <*field*>[:<*unit*>] or --fields=<*field*>[:<*unit*>]
selects fields and units in the current window. The <*field*> variable is a one letter unique identifier for a field (for example "c" for CPU time). The <*unit*> variable specifies the unit that is used for the field (for example "us" for microseconds). See“Available fields and units” on page 578 for definitions. If the **--fields** option is specified, only the selected fields are shown.

Note: If your field specification includes the number sign (#), enclose the specification in double quotation marks. Otherwise, the command shell might interpret the number sign and all characters that follow as a comment.

-S <*field*> or --sort=<*field*>
selects the field that is used to sort the data in the current window. To reverse the sort order, specify the option twice. See “Available fields and units” on page 578 for definitions.

-t <*type*> or --cpu_types=<*type*>
selects CPU types that are used for dispatch time calculations. See “CPU types” on page 580 for definitions.

-b or --batch_mode
uses batch mode. Batch mode can be useful for sending output from hyptop to another program, a file, or a line mode terminal. In this mode no user input is accepted.

-d <*seconds*> or --delay=<*seconds*>
specifies the delay between screen updates.

-n <*iterations*> or --iterations=<*iterations*>
specifies the maximum number of screen updates before the program ends.

-h or --help
prints usage information, then exits. To view the man page, enter **man hyptop**.

-v or --version
displays the version of **hyptop**, then exits.

Navigating between windows

Use letter or arrow keys to navigate between the windows.

When you start the **hyptop** command, the sys_list window opens in normal mode. Data is updated at regular intervals, and sorted by dispatch time. You can navigate between the windows as shown in Figure 75.

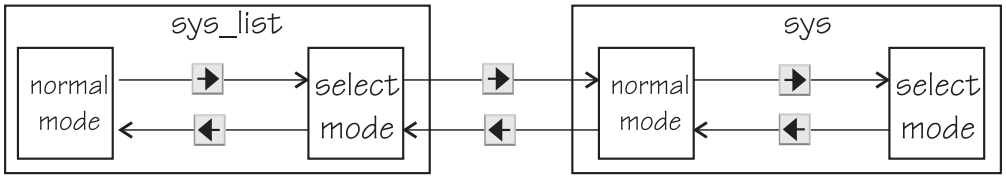

Figure 75. hyptop window navigation overview

To navigate between the windows, use the ← and → arrow keys. The windows have two modes, normal mode and select mode.

You can get online help for every window by pressing the ? key. Press Q in the sys_list window to exit hyptop.

Instead of using the arrow keys, you can use letter keys (equivalent to the vi editor navigation) in all windows as listed in Table 61.

Table 61. Using letter keys instead of arrow keys

Arrow key	Letter key equivalent
←	H
↓	J
↑	K
→	L

Selecting data

You can scroll windows and select data rows.

To enter select mode, press the → key. The display is frozen so that you can select rows. Select rows by pressing the ↑ and ↓ keys and mark the rows with the Spacebar. Marked rows are displayed in bold font. Leave the select mode by pressing the ← key.

To see the details of one system, enter select mode in the sys_list window, then navigate to the row for the system you want to look at, and press the → key. The sys window for the system opens. The ← key always returns you to the previous window.

To scroll any window, press the ↑ and ↓ keys or the Page Up and Page Down keys. Jump to the end of a window by pressing the Shift + G keys and to the beginning by pressing the G key.

Sorting data

You can sort data according to column.

The sys window or sys_list window table is sorted according to the values in the selected column. Select a column by pressing the hot key of the column. This key is underlined in the heading. If you press the hot key again, the sort order is reversed. Alternatively, you can select columns with the < and > keys.

Filtering data

You can filter the displayed data by CPU types and by data fields.

From the sys or sys_list window you can access the fields selection window and the CPU-type selection window as shown in Figure 76.

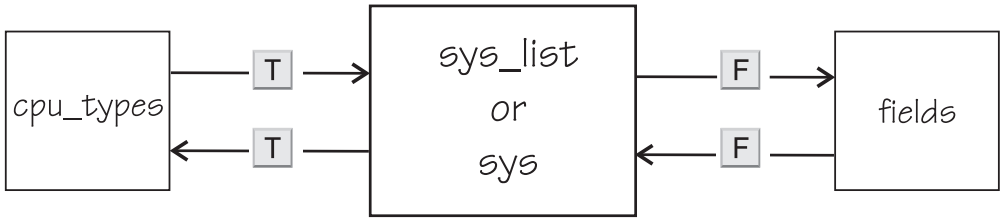

Figure 76. Accessing the fields and CPU-type selection windows

Use the T key to toggle between the CPU-type selection window and the main window. Use the F key to toggle between the fields selection window and the main window. You can also use the ← key to return to the main window from the CPU types and fields windows.

In the fields and CPU-type selection windows, press the field or CPU type identifier key (see "LPAR fields" on page 578, "z/VM fields" on page 578, and "CPU types" on page 580) to select or de-select. Selected rows are bold and de-selected rows are grey. When you return to the main window, the data is filtered according to your field and CPU type selections.

Available fields and units

Different fields are supported depending whether your hypervisor is LPAR PR/SM or z/VM.

The fields might also be different depending on machine type, z/VM version, and kernel version. Each field has a unique one-letter identifier that can be used in interactive mode to enable the field in the field selection window. Also, use it to select the sort field in the sys or sys_list window. You can also select fields and sort data using the **--fields** and **--sort** command line options.

LPAR fields

Some fields for Linux in LPAR mode are available in both the sys_list and sys windows others are available only in the sys_list window or only in the sys window.

The following fields are available under LPAR in both the sys_list and sys windows:

Identifier	Column label	Explanation
c	core	Core dispatch time per second
e	the	Thread time per second
m	mgm	Management time per second
C	Core+	Total core dispatch time
E	thE+	Total thread time
M	Mgm+	Total management time
o	online	Online time

If multithreading is not available or not enabled, the values for core and for thread are identical.

In the sys_list window only:

Identifier	Column label	Explanation
y	system	Name of the LPAR (always shown)
#	#core	Number of cores
T	#The	Number of threads (sum of initial and reserved)

In the sys window only:

Identifier	Column label	Explanation
i	coreid	Core identifier (always shown)
p	type	CPU type. See “CPU types” on page 580
v	visual	Visualization of core dispatch time per second

z/VM fields

Some fields for Linux on z/VM are available in both the sys_list and sys windows. Others are available only in the sys_list window or only in the sys window.

In the sys_list and sys windows:

Identifier	Column label	Explanation
c	cpu	CPU time per second
m	mgm	Management time per second
C	Cpu+	Total CPU time
M	Mgm+	Total management time
o	online	Online time

Note: Data for the management time, identifiers `m` and `M`, is available only for the z/VM guest virtual machine on which **hyptop** runs.

In the sys_list window only:

Identifier	Column label	Explanation
y	system	Name of the z/VM guest virtual machine (always shown)
#	#cpu	Number of CPUs
O	#cpuop	Number of operating CPUs
u	memuse	Used memory
a	memmax	Maximum memory
r	wcur	Current weight
x	wmax	Maximum weight

In the sys window only:

Identifier	Column label	Explanation
i	cpuid	CPU identifier (always shown)
v	visual	Visualization of CPU time per second

Units

Depending on the field type, the values can be displayed in different units.

In the sys_list and sys windows, the units are displayed under the column headings in parenthesis. Each unit can be specified through the **--fields** command line option. Units can also be selected interactively. To change a unit, enter select mode in the fields window. Then, select the field where you want to change the unit, and press the "+" or "-" keys to go through the available units. The following units are supported:

Units of time:

Unit	Explanation
us	Microseconds (10^{-6} seconds)
ms	Milliseconds (10^{-3} seconds)
%	Hundreds of a second (10^{-2} seconds) or percent
s	Seconds
m	Minutes
hm	Hours and minutes

Unit	Explanation
dhm	Days, hours, and minutes

Units of memory:

Unit	Explanation
KiB	Kibibytes (1 024 bytes)
MiB	Mebibytes (1 048 576 bytes)
GiB	Gibibytes (1 073 741 824 bytes)

Other units:

Unit	Explanation
str	String
#	Count or number
vis	Visualization

CPU types

Enable or disable CPU types in interactive mode in the cpu_types window.

The CPU types can also be specified with the `--cpu_types` command line option.

The calculation of the CPU data uses CPUs of the specified types only. For example, if you want to see how much CPU time is consumed by your Linux systems, enable CPU type IFL.

On z/VM the processor type is always UN and you cannot select the type.

In an LPAR the following CPU types can be selected either interactively or with the `--cpu_types` command line option:

Identifier	Column label	Explanation
i	IFL	Integrated Facility for Linux. On older machines IFLs might be shown as CPs.
p	CP	CP processor type.
u	UN	Unspecified processor type (other than CP or IFL).

Examples

These examples show typical uses of **hyptop**.

- To start **hyptop** with the sys_list window in interactive mode, enter:

```
# hyptop
```

  – If your Linux instance is running in an LPAR that has permission to see the other LPARs, the output looks like the following:

```
12:30:48 | cpu-t: IFL(18)  CP(3)  UN(3)                                  ?=help
system   #core  core    mgm    Core+  Mgm+   online
(str)     (#)   (%)     (%)    (hm)   (hm)   (dhm)
S05LP30   10   461.14  10.18  1547:41 8:15 11:05:59
S05LP33    4   133.73   7.57  220:53  6:12 11:05:54
S05LP50    4    99.26   0.01  146:24  0:12 10:04:24
S05LP02    1    99.09   0.00  269:57  0:00 11:05:58
TRX2CFA    1     2.14   0.03    3:24  0:04 11:06:01
S05LP13    6     1.36   0.34    4:23  0:54 11:05:56
TRX1      19     1.22   0.14   13:57  0:22 11:06:01
TRX2      20     1.16   0.11   26:05  0:25 11:06:00
S05LP55    2     0.00   0.00    0:22  0:00 11:05:52
S05LP56    3     0.00   0.00    0:00  0:00 11:05:52
         413   823.39  23.86 3159:57 38:08 11:06:01
```

– If your Linux instance runs in a z/VM guest virtual machine that has permission to see the other z/VM guest virtual machines, the output looks like the following:

```
12:32:21 | CPU-T: UN(16)                                                   ?=help
system    #cpu    cpu    Cpu+    online  memuse  memmax  wcur
(str)     (#)     (%)    (hm)    (dhm)   (GiB)   (GiB)   (#)
T6360004   6   100.31  959:47 53:05:20     1.56   2.00    100
DTCVSW1    1     0.00    0:00 53:16:42     0.01   0.03    100
T6360002   6     0.00  166:26 40:19:18     1.87   2.00    100
OPERATOR   1     0.00    0:00 53:16:42     0.00   0.03    100
T6360008   2     0.00    0:37 30:22:55     0.32   0.75    100
T6360003   6     0.00 3700:57 53:03:09     4.00   4.00    100
NSLCF1     1     0.00    0:02 53:16:41     0.03   0.25    500
PERFSVM    1     0.00    0:53 2:21:12      0.04   0.06      0
TCPIP      1     0.00    0:01 53:16:42     0.01   0.12   3000
DIRMAINT   1     0.00    0:04 53:16:42     0.01   0.03    100
DTCVSW2    1     0.00    0:00 53:16:42     0.01   0.03    100
RACFVM     1     0.00    0:00 53:16:42     0.01   0.02    100
          75   101.57 5239:47 53:16:42    15.46  22.50   3000
```

At the top, the sys and sys_list windows show a list of the CPU types that are used for the current CPU and core dispatch time calculation.

- To start **hyptop** with the sys window showing performance data for LPAR MYLPAR, enter:

```
# hyptop -w sys -s mylpar
```

The result looks like the following:

```
11:18:50 MYLPAR CPU-T: IFL(0) CP(24) UN(2)                              ?=help
coreid type    core mgm visual
(#)  (str)     (%)  (%) (vis)
0        CP  50.78 0.28 |######################                |
1        CP  62.76 0.17 |###########################           |
2        CP  71.11 0.48 |################################      |
3        CP  32.38 0.24 |###############                       |
4        CP  64.35 0.32 |############################          |
5        CP  67.61 0.40 |#############################         |
6        CP  70.95 0.35 |################################      |
7        CP  62.16 0.41 |###########################           |
8        CP  70.48 0.25 |################################      |
9        CP  56.43 0.20 |########################              |
10       CP   0.00 0.00 |                                      |
11       CP   0.00 0.00 |                                      |
12       CP   0.00 0.00 |                                      |
13       CP   0.00 0.00 |                                      |
=:V:N       609.02 3.10
```

- To start **hyptop** with the sys_list window in batch mode, enter:

```
# hyptop -b
```

- To start **hyptop** with the sys_list window in interactive mode, with the fields dispatch time (in milliseconds), and online time (unit default), and sort the output according to online time, enter:

```
# hyptop -f c:ms,o -S o
```

- To start **hyptop** with the sys_list window in batch mode with update delay 5 seconds and 10 iterations, enter:

```
# hyptop -b -d 5 -n 10
```

- To start **hyptop** with the sys_list window and use only CPU types IFL and CP for dispatch time calculation, enter:

```
# hyptop -t ifl,cp
```

- To start **hyptop** on Linux in LPAR mode with the sys_list window and display all LPAR fields, including the thread information, enter:

```
# hyptop -f "#,T,c,e,m,C,E,M,o"
```

The result looks like the following example:

```
13:47:42 cpu-t: IFL(0) CP(38) UN(0)                                    ?=help
system    #core  #The    core     the  mgm   Core+    thE+  Mgm+    online
(str)      (#)   (#)     (%)     (%)  (%)    (hm)    (hm)  (hm)     (dhm)
S35LP41      12    24  101.28  170.28 0.28 1056:10 1756:11  8:45 158:04:04
S35LP42      16    32   35.07   40.07 0.44 5194:52 6193:52 12:45 158:04:04
S35LP64       3     3    1.20    1.20 0.00    0:31    0:31  0:00  12:03:54
...
```

In the example, the Linux instances in LPARs S35LP41 and S35LP43 run with 2 threads per core. The thread time, as the sum of the two threads, exceeds the core dispatch time.

The Linux instance in LPAR S35LP64 does not use simultaneous multithreading.

- To start **hyptop** on Linux on z/VM with the sys_list window and display a selection of z/VM fields, including the management time, enter:

```
# hyptop -f "#,c,m,C,M,o"
```

The result looks like the following example:

```
17:52:56 cpu-t: IFL(0) UN(2)                                           ?=help
system     #cpu   cpu   mgm   Cpu+  Mgm+  online
(str)      (#)    (%)   (%)   (hm)  (hm)   (dhm)
G3545010      3  0.55  0.05   0:05  0:02 0:03:14
G3545021      3  0.04     -   0:00     - 0:02:43
G3545025      2  0.01     -   0:00     - 0:04:08
...

G3545099      1  0.00     -   0:00     - 0:09:06
             52  0.61  0.05   0:27  0:02 0:09:06
```

In the example, `hyptop` runs on a Linux instance in z/VM guest virtual machine `G3545010`. In the sys_list window, this is the only guest virtual machine for which management data is displayed.

Scenario

Perform the steps described in this scenario to start **hyptop** with the sys window with system MYLPAR with the fields dispatch time (unit milliseconds) and total dispatch time (unit default), sort the output according to the total dispatch time, and then reverse the sort order.

Procedure

1. Start hyptop.

```
# hyptop
```

2. Go to select mode by pressing the → key. The display will freeze.
3. Navigate to the row for the system you want to look (in the example MYLPAR) at using the ↑ and ↓ keys.

```
12:15:00 | CPU-T: IFL(18)  CP(3)  UN(3)                                  ?=help
system   #core  core    mgm    Core+  Mgm+   online
(str)     (#)   (%)     (%)    (hm)   (hm)   (dhm)
 MYLPAR    4   199.69   0.04   547:41 8:15 11:05:59
S05LP33    4   133.73   7.57  220:53  6:12 11:05:54
S05LP50    4    99.26   0.01  146:24  0:12 10:04:24
S05LP02    1    99.09   0.00  269:57  0:00 11:05:58
...
S05LP56    3     0.00   0.00    0:00  0:00 11:05:52
         413   823.39  23.86 3159:57 38:08 11:06:01
```

4. Open the sys window for MYLPAR by pressing the → key.

```
12:15:51 MYLPAR cpu-t: IFL(18) CP(3) UN(2)                             ?=help
coreid type    core mgm visual
(#)   (str)    (%)  (%) (vis)
0       IFL  99.84 0.02 |######################################
1       IFL  99.85 0.02 |######################################
2       IFL   0.00 0.00 |
3       IFL   0.00 0.00 |
=:V:N       199.69 0.04
```

5. Press the F key to go to the fields selection window:

```
Select Fields and Units                                                ?=help
K S ID     UNIT AGG  DESCRIPTION
p * type   str  none CPU type
c * core   %    sum  CPU time per second
m * mgm    %    sum  Management time per second
C   core+  hm   sum  Total CPU time
E   thE+   %    sum  Total thread time
M   mgm+   hm   sum  Total management time
o   online dhm  max  Online time
v * visual vis  none Visualization of CPU time per second
```

Ensure that dispatch time per second and total dispatch time are selected and for dispatch time microseconds are used as unit:

a. Press the P key, the M key, and the V key to disable `CPU type`, `Management time per second`, and `Visualization`.

b. Press the C key to enable `Total core dispatch time`.

c. Then select the `Core dispatch time per second` row by pressing the → and ↓ keys.

d. Press the minus key (-) to switch from the percentage (%) unit to the microseconds (ms) unit.

```
Select Fields and Units ?=help
K S ID     UNIT AGG  DESCRIPTION
p   type   str  none CPU type
c * core   ms   sum  CPU time per second
m   mgm    %    sum  Management time per second
C * core+  hm   sum  Total CPU time
E   thE+   %    sum  Total thread time
M   mgm+   hm   sum  Total management time
o   online dhm  max  Online time
v   visual vis  none Visualization of CPU time per second
```

Press the ← key twice to return to the sys window.

6. To sort by `Total core dispatch time` and list the values from low to high, press the Shift + C keys twice:

```
13:44:41 MYLPAR CPU-T: IFL(18) CP(3) UN(2)                ?=help
cpuid    core   Core+
(#)     (ms)    (hm)
2       0.00    0:00
3       0.00    0:00
1      37.48  492:55
0      23.84  548:52
=:^:N  61.33 1041:47
```

Results

You can do all of these steps in one by entering the command:

```
# hyptop -w sys -s mylpar -f c:ms,C -S C -S C
```

lschp - List channel paths

Use the **lschp** command to display information about channel paths.

lschp syntax

```
►►─lschp──┬──────────┬──────────────────────────────────────────►◄
          ├─--help───┤
          └─--version┘
```

Where:

Output column description:

CHPID
Channel-path identifier.

Vary
Logical channel-path state:

- 0 = channel-path is not used for I/O.
- 1 = channel-path is used for I/O.

Cfg.
Channel-path configure state:

- 0 = stand-by
- 1 = configured
- 2 = reserved
- 3 = not recognized

Type
Channel-path type identifier.

Cmg
Channel measurement group identifier.

Shared
Indicates whether a channel-path is shared between LPARs:

- 0 = channel-path is not shared
- 1 = channel-path is shared

PCHID
Physical channel path identifier, or, if enclosed in brackets, internal channel identifier. The mapping might not be available to Linux when it is running as a z/VM guest. If so, use the CP command:

```
QUERY CHPID <num> PCHID
```

A column value of '-' indicates that a facility associated with the corresponding channel-path attribute is not available.

-v or --version
displays the version number of **lschp** and exits.

-h or --help
displays a short help text, then exits. To view the man page enter **man lschp**.

Examples

- To query the configuration status of channel path ID 0.40 issue:

```
# lschp

CHPID Vary Cfg. Type Cmg Shared  PCHID
=====================================
...
...
0.40  1    1    1b   2   1        0580
...
...
```

The value under **Cfg.** shows that the channel path is configured (1).

lscpumf - Display information about the CPU-measurement facilities

Use the **lscpumf** command to display information about information about the CPU-measurement facilities.

lscpumf syntax

```
►►──lscpumf──┬──────┬──────────────────────────────────────────────►◄
             ├─ -i─┤
             ├─ -c─┤
             ├─ -C─┤
             ├─ -s─┤
             ├─ -h─┤
             └─ -v─┘
```

where:

-i or --info
displays detailed information about available and supported CPU measurement facilities.

-c or --list-counters
lists counters that are provided by the CPU-measurement facility, omitting counters for which the LPAR is not authorized. For counter measurements with the perf program, the raw event identifier and symbolic counter name are displayed.

-C or --list-all-counters
lists all counters that are provided by the CPU-measurement counter facility, regardless of LPAR authorization. To list only those counters for which the LPAR is authorized, use the **-c** option. For counter measurements with the perf program, the raw event identifier and symbolic counter name are displayed.

-s or --list-sampling-events
lists perf raw events that activate the sampling facility.

-v or --version
displays the version number of **lscpumf** and exits.

-h or --help
displays out a short help text, then exits. To view the man page, enter **man lscpumf**.

Examples

- To display the supported facilities, issue:

```
# lscpumf
CPU-measurement Counter Facility
CPU-measurement Sampling Facility
```

- To display details about the facilities, issue:

```
# lscpumf -i
CPU-measurement counter facility
----------------------------------------------------------------------------
Version: 1.2

Authorized counter sets:
    Basic counter set
    Problem-State counter set

Linux perf event support: Yes (PMU: cpum_cf)


CPU-measurement sampling facility
----------------------------------------------------------------------------
Sampling Interval:
     Minimum:      18228 cycles (approx.   285714 Hz)
     Maximum:  170650536 cycles (approx.       30 Hz)

Authorized sampling modes:
     basic      (sample size:  32 bytes)


Linux perf event support: Yes (PMU: cpum_sf)

Current sampling buffer settings for cpum_sf:
    Basic-sampling mode
        Minimum:     15 sample-data-blocks (  64KB)
        Maximum:   8176 sample-data-blocks (  32MB)
```

- To display perf event information for authorized sampling functions, issue:

```
# lscpumf -s
Perf events for activating the sampling facility
================================================================================

Raw
event   Name    Description
--------------------------------------------------------------------------------
rb0000  SF_CYCLES_BASIC

                Sample CPU cycles using basic-sampling mode.
                This event is not associated with a counter set.
```

- To list all counters that are provided by your z Systems hardware, issue:

```
# lscpumf -C
Perf event counter list for IBM zEnterprise 196
===============================================================================

Raw
event   Name    Description
-------------------------------------------------------------------------------
r0      CPU_CYCLES

                Cycle Count.
                Counter 0 / Basic Counter Set.

r1      INSTRUCTIONS

                Instruction Count.
                Counter 1 / Basic Counter Set.

r2      L1I_DIR_WRITES

                Level-1 I-Cache Directory Write Count.
                Counter 2 / Basic Counter Set.

r3      L1I_PENALTY_CYCLES

                Level-1 I-Cache Penalty Cycle Count.
                Counter 3 / Basic Counter Set.

r4      L1D_DIR_WRITES

                Level-1 D-Cache Directory Write Count.
                Counter 4 / Basic Counter Set.

r5      L1D_PENALTY_CYCLES

                Level-1 D-Cache Penalty Cycle Count.
                Counter 5 / Basic Counter Set.

r20     PROBLEM_STATE_CPU_CYCLES

                Problem-State Cycle Count.
                Counter 32 / Problem-State Counter Set.

r21     PROBLEM_STATE_INSTRUCTIONS

                Problem-State Instruction Count.
                Counter 33 / Problem-State Counter Set.
 ...
```

lscss - List subchannels

Use the **lscss** command to gather subchannel information from sysfs and display it in a summary format.

lscss syntax

```
>>-lscss-+-------+-+-----+-+---------+-+-------+-+-------+-------------->
         | -s    | | -u  | | --avail | |       | | --vpm |
                                                  | --io  |
                                                  | --chsc |
                                                  | --eadm |
                                                  | -a    |

>-+-------------------------------------------------------------------+->
  |                  ,                                                |
  | -t ---------->--<devicetype>-+-------------+-----------------------|
  |                              |/--<model>-|                        |

>-+-------------------------------------------------------------------+><
  |                  ,                                                |
  |-+-----+-------->--<bus_id>-------------------------------------|
  | -d    |          <from_bus_id>-<to_bus_id>                       |
```

Where:

-s or --short
strips the 0.0. from the device bus-IDs in the command output.

Note: This option limits the output to bus IDs that begin with 0.0.

-u or --uppercase
displays the output with uppercase letters. The default is lowercase.

Changed default: Earlier versions of **lscss** printed the command output in uppercase. Specify this option to obtain the former output style.

--avail
includes the availability attribute of I/O devices.

--vpm
shows verified paths in a mask. Channel paths that are listed in this mask are available to Linux device drivers for I/O. Reasons for a channel path to be unavailable include:

- The corresponding bit is not set in at least one of the PIM, PAM, or POM masks.
- The channel path is varied offline.
- Linux received no interrupt to I/O when using this channel path.

--io
limits the output to I/O subchannels and corresponding devices. This option is the default.

--chsc
limits the output to CHSC subchannels.

--eadm
limits the output to EADM subchannels.

-a or --all
does not limit the output.

-t or --devtype
limits the output to subchannels that correspond to devices of the specified device types and, if provided, the specified model.

<devicetype>
specifies a device type.

<model>
is a specific model of the specified device type.

-d or --devrange
interprets bus IDs as specifications of devices. By default, bus IDs are interpreted as specifications of subchannels.

<bus_id>
specifies an individual subchannel; if used with **-d** specifies an individual device. If you omit the leading 0.<*subchannel set ID*>., 0.0. is assumed.

If you specify subchannels or devices, the command output is limited to these subchannels or devices.

<from_bus_id>-<to_bus_id>
specifies a range of subchannels; if used with **-d** specifies a range of devices. If you omit the leading 0.<*subchannel set ID*>., 0.0. is assumed.

If you specify subchannels or devices, the command output is limited to these subchannels or devices.

-v or --version
displays the version number of **lscss** and exits.

-h or --help
displays a short help text, then exits. To view the man page enter **man lscss**.

Examples

- This command lists all subchannels that correspond to I/O devices, including subchannels that do not correspond to I/O devices: :

```
# lscss -a
IO Subchannels and Devices:
Device   Subchan.  DevType CU Type Use  PIM PAM POM  CHPIDs
----------------------------------------------------------------------
0.0.f500 0.0.05cf  1732/01 1731/01 yes  80  80  ff   76000000 00000000
0.0.f501 0.0.05d0  1732/01 1731/01 yes  80  80  ff   76000000 00000000
0.0.f502 0.0.05d1  1732/01 1731/01 yes  80  80  ff   76000000 00000000
0.0.6194 0.0.36e0  3390/0c 3990/e9 yes  fc  fc  ff   32333435 40410000
0.0.6195 0.0.36e1  3390/0c 3990/e9 yes  fc  fc  ff   32333435 40410000
0.0.6196 0.0.36e2  3390/0c 3990/e9 yes  fc  fc  ff   32333435 40410000

CHSC Subchannels:
Device   Subchan.
-----------------
n/a      0.0.ff40

EADM Subchannels:
Device   Subchan.
-----------------
n/a      0.0.ff00
n/a      0.0.ff01
n/a      0.0.ff02
n/a      0.0.ff03
n/a      0.0.ff04
n/a      0.0.ff05
n/a      0.0.ff06
n/a      0.0.ff07
```

- This command limits the output to subchannels with attached DASD model 3390 type 0a:

```
# lscss -t 3390/0a
Device   Subchan.  DevType CU Type Use  PIM PAM POM  CHPIDs
----------------------------------------------------------------------
0.0.2f08 0.0.0a78  3390/0a 3990/e9 yes  c0  c0  ff   34400000 00000000
0.0.2fe5 0.0.0b55  3390/0a 3990/e9      c0  c0  bf   34400000 00000000
0.0.2fe6 0.0.0b56  3390/0a 3990/e9      c0  c0  bf   34400000 00000000
0.0.2fe7 0.0.0b57  3390/0a 3990/e9 yes  c0  c0  ff   34400000 00000000
```

- This command limits the output to the subchannel range 0.0.0b00-0.0.0bff:

```
# lscss 0.0.0b00-0.0.0bff
Device   Subchan.  DevType CU Type Use  PIM PAM POM  CHPIDs
----------------------------------------------------------------------
0.0.2fe5 0.0.0b55  3390/0a 3990/e9      c0  c0  bf   34400000 00000000
0.0.2fe6 0.0.0b56  3390/0a 3990/e9      c0  c0  bf   34400000 00000000
0.0.2fe7 0.0.0b57  3390/0a 3990/e9 yes  c0  c0  ff   34400000 00000000
```

- This command limits the output to subchannels 0.0.0a78 and 0.0.0b57 and shows the availability:

```
# lscss --avail 0a78,0b57
Device   Subchan.  DevType CU Type Use  PIM PAM POM  CHPIDs           Avail.
-----------------------------------------------------------------------------
0.0.2f08 0.0.0a78  3390/0a 3990/e9 yes  c0  c0  ff   34400000 00000000 good
0.0.2fe7 0.0.0b57  3390/0a 3990/e9 yes  c0  c0  ff   34400000 00000000 good
```

- This command limits the output to subchannel 0.0.0a78 and displays uppercase output:

```
# lscss -u 0a78
Device   Subchan.  DevType CU Type Use  PIM PAM POM  CHPIDs
----------------------------------------------------------------------
0.0.2F08 0.0.0A78  3390/0A 3990/E9 YES  C0  C0  FF   34400000 00000000
```

- This command limits the output to subchannels that correspond to I/O device 0.0.7e10 and the device range 0.0.2f00-0.0.2fff:

```
# lscss -d 2f00-2fff,0.0.7e10
Device   Subchan.  DevType CU Type Use  PIM PAM POM  CHPIDs
----------------------------------------------------------------------
0.0.2f08 0.0.0a78  3390/0a 3990/e9 yes  c0  c0  ff   34400000 00000000
0.0.2fe5 0.0.0b55  3390/0a 3990/e9      c0  c0  bf   34400000 00000000
0.0.2fe6 0.0.0b56  3390/0a 3990/e9      c0  c0  bf   34400000 00000000
0.0.2fe7 0.0.0b57  3390/0a 3990/e9 yes  c0  c0  ff   34400000 00000000
0.0.7e10 0.0.1828  3390/0c 3990/e9 yes  f0  f0  ef   34403541 00000000
```

- This example shows a CHPID with PIM, PAM, and POM masks that are OK. However, the entry in the **vpm** column indicates that one of the paths, 0x41, is not usable for I/O.

```
# lscss --vpm
Device    Subchan. DevType  CU Type Use  PIM PAM POM VPM CHPIDs
-------------------------------------------------------------------------
0.0.f500  0.0.05cf  1732/01 1731/01 yes  80  80  ff  80  76000000 00000000
0.0.f501  0.0.05d0  1732/01 1731/01 yes  80  80  ff  80  76000000 00000000
0.0.f502  0.0.05d1  1732/01 1731/01 yes  80  80  ff  80  76000000 00000000
0.0.6194  0.0.3700  3390/0c 3990/e9 yes  fc  fc  ff  f8  32333435 40410000
0.0.6195  0.0.3701  3390/0c 3990/e9 yes  fc  fc  ff  f8  32333435 40410000
0.0.6196  0.0.3702  3390/0c 3990/e9 yes  fc  fc  ff  f8  32333435 40410000
0.0.6197  0.0.3703  3390/0c 3990/e9      fc  fc  ff  00  32333435 40410000
0.2.5600  0.2.0040  1732/03 1731/03      80  80  ff  00  5d000000 00000000
```

lsdasd - List DASD devices

Use the **lsdasd** command to gather information about DASD devices from sysfs and display it in a summary format.

lsdasd syntax

```
►►─lsdasd──┬─────┬──┬─────┬──┬─────┬──┬─────┬──────────────────────────────►
           └─ -a ─┘  └─ -b ─┘  └─ -s ─┘  └─ -v ─┘
                                          ┌──────────────────────────┐
                                          ▼                          │
►──┬─────┬──┬─────┬──┬─────┬──┬─────┬──┬──────────────────────┬──┬──────►◄
   └─ -l ─┘  └─ -c ─┘  └─ -u ─┘  └─ -H ─┘  └─ <device_bus_id> ─┘
```

Where:

-a or --offline
includes devices that are currently offline.

-b or --base
omits PAV alias devices. Lists only base devices.

-s or --short
strips the bus ID in the command output down to the four-digit device number.

-v or --verbose
Obsolete. This option has no effect on the output.

-l or --long
extends the output to include attributes, the UID and path information.

-c or --compat
creates output of this command as with versions earlier than 1.7.0.

-u or --uid
includes and sorts output by UID.

-H or --host_access_list
shows information about all operating system instances that use this device.

<device_bus_id>
limits the output to information about the specified devices only.

--version
displays the version of the command.

-h or --help
displays a short help text, then exits. To view the man page, enter **man lsdasd**.

Examples

- The following command lists all DASD (including offline DASDS):

```
# lsdasd -a
Bus-ID      Status     Name     Device     Type    BlkSz     Size       Blocks
==============================================================================
0.0.0190    offline
0.0.0191    offline
0.0.019d    offline
0.0.019e    offline
0.0.0592    offline
0.0.4711    offline
0.0.4712    offline
0.0.4f2c    offline
0.0.4d80    active    dasda     94:0       ECKD    4096     4695MB       1202040
0.0.4f19    active    dasdb     94:4       ECKD    4096    23034MB       5896800
0.0.4d81    active    dasdc     94:8       ECKD    4096     4695MB       1202040
0.0.4d82    active    dasdd     94:12      ECKD    4096     4695MB       1202040
0.0.4d83    active    dasde     94:16      ECKD    4096     4695MB       1202040
```

- The following command shows information only for the DASD with device number 0x4d80 and strips the bus ID in the command output down to the device number:

```
# lsdasd -s 0.0.4d80
Bus-ID      Status    Name       Device    Type     BlkSz    Size       Blocks
==============================================================================
4d80        active    dasda      94:0      ECKD     4096     4695MB     1202040
```

- The following command shows only online DASDs in the format of **lsdasd** versions earlier than 1.7.0:

```
# lsdasd -c
0.0.4d80(ECKD) at ( 94: 0) is dasda : active at blocksize 4096, 1202040 blocks, 4695 MB
0.0.4f19(ECKD) at ( 94: 4) is dasdb : active at blocksize 4096, 5896800 blocks, 23034 MB
0.0.4d81(ECKD) at ( 94: 8) is dasdc : active at blocksize 4096, 1202040 blocks, 4695 MB
0.0.4d82(ECKD) at ( 94: 12) is dasdd : active at blocksize 4096, 1202040 blocks, 4695 MB
0.0.4d83(ECKD) at ( 94: 16) is dasde : active at blocksize 4096, 1202040 blocks, 4695 MB
```

- The following command shows the device geometry, UID, path information, and some of the settings for the DASD with device bus-ID `0.0.4d82`:

```
lsdasd -l 0.0.4d82
0.0.4d82/dasdd/94:12
  status:                              active
  type:                                ECKD
  blksz:                               4096
  size:                                4695MB
  blocks:                              1202040
  use_diag:                            0
  readonly:                            0
  eer_enabled:                         0
  erplog:                              0
  hpf:                                 1
  uid:                                 IBM.75000000010671.4d82.16
  paths_installed:                     30 31 32 33 3c 3d
  paths_in_use:                        31 32 33
  paths_non_preferred:
  paths_invalid_cabling:               3c
  paths_cuir_quiesced:                 30
  paths_invalid_hpf_characteristics:   3d
  paths_error_threshold_exceeded:
```

In the example, three of the installed paths are unused for different reasons:

- The path with CHPID 3c is not used because of a cabling error to the storage system. This channel path does not connect to the same physical disk space as the other channel path for this device.
- The path with CHPID 30 is not used because of a control-unit initiated reconfiguration (CUIR).
- The path with CHPID 3d is not used because its High Performance FICON characteristics do not match with the paths currently in use.

• The following command shows whether other operating system instances access device 0.0.bf45:

```
# lsdasd -H bf45
Host information for 0.0.bf45
Path-Group-ID          LPAR  CPU   FL  Status  Sysplex      Max_Cyls        Time
==============================================================================
88000d29e72964ce8570b8 0d    29e7  50  ON      TRX1LNX1    268434453           0
88000e29e72964ce8570c3 0e    29e7  50  ON                  268434453           0
88000f29e72964ce8570d1 0f    29e7  50  ON                  268434453           0
88011d29e72964ce8570d4 1d    29e7  50  ON                  268434453           0
88011e29e72964ce8570d9 1e    29e7  50  ON                  268434453           0
88011f29e72964ce8570e3 1f    29e7  50  ON                  268434453           0
88022d29e72964ce8570e6 2d    29e7  50  ON                  268434453           0
88022e29e72964ce8570ea 2e    29e7  50  ON                  268434453           0
88022f29e72964ce8570f1 2f    29e7  50  ON                  268434453           0
88033d29e72964ce8570f7 3d    29e7  50  ON                  268434453           0
88033e29e72964ce8570fe 3e    29e7  50  ON                  268434453           0
88033f29e72964ce85710e 3f    29e7  50  ON                  268434453           0
80004229e72964ce7dce74 42    29e7  00  OFF                     65520           0
80004a29e72964ce7db60d 4a    29e7  00  OFF                     65520           0
80003c29e72964ce8481a6 3c    29e7  00  OFF                     65520           0
80004629e72964ce7f1c13 46    29e7  70  ON-RSV                  65520  1424174863
```

Status values are:

ON The device is online.

OFF The device is offline.

ON-RSV
The device is online and reserved.

OFF-RSV
The device is offline and reserved by an operating system instance in another LPAR.

The meaning of the columns is as follows:

Path-group-ID
A 22-digit hexadecimal number assigned by the operating system when setting the DASD online. This ID uniquely identifies the operating system to the storage server.

LPAR A 2 digit LPAR ID.

CPU A 4 digit CPU ID, as it is defined in the HMC or can be read from /proc/cpuinfo.

FL A 2 digit hexadecimal flag. 0x20 means reserved , 0x50 means online.

Sysplex
The 8-character EBCDIC name of the SYSPLEX.

MAX_CYLS
The maximum number of cylinders per volume that are supported by the host.

TIME Time the device has been reserved in seconds since July 1, 1970.

lshmc - List media contents in the HMC media drive

Use the **lshmc** command to display the contents of the media in the HMC media drive.

Before you begin: To be able to use this command, you need the **hmcdrv** module (see Chapter 29, "HMC media device driver," on page 367).

lshmc syntax

```
►►─lshmc──┬──────────────┬──┬──────┬──────────────────────────────────►◄
          └─<filepath>───┘  └─ -s─┘
```

Where:

<filepath>
specifies a directory or path to a file to be listed. Path specifications are relative to the root of the file system on the media. You can use the asterisk (*) and question mark (?) as wildcards. If this specification is omitted, the contents of the root directory are listed.

-s or --short
limits the output to regular files in a short listing format. Omits directories, symbolic links, and device nodes and other special files.

-v or --version
displays version information for the command.

-h or --help
displays a short help text, then exits. To view the man page, enter **man lshmc**.

Examples

- To list the files in the root directory of the media in the HMC's media drive, issue:

```
# lshmc
```

- If the hmcdrv kernel module is not loaded, load it before you issue the **lshmc** command:

```
# modprobe hmcdrv
# lshmc
```

- To list all HTML files in subdirectory `www`, issue:

```
# lshmc /www/*.html
```

lsluns - Discover LUNs in Fibre Channel SANs

Use the **lsluns** command to discover and scan LUNs in Fibre Channel storage area networks (SANs) or to show LUNs actively used in Linux.

lsluns syntax

```
                  ┌──────────────────────┐
                  ▼                      │
►►──lsluns──┬─────────────────────────┬──┴──────────────────────────────►◄
            ├─ -c── <device_bus_id>──┤
            ├─ -p── <wwpn>──────────┤
            └─ -a──────────────────┘
```

Where:

-c or --ccw *<device_bus_id>*
shows LUNs for a specific FCP device.

-p or --port *<wwpn>*
shows LUNs for the port with the specified WWPN.

-a or --active
shows the currently active LUNs. A bracketed "x" indicates that the corresponding disk is encrypted.

-v or --version
displays the version number of **lsluns** and exits.

-h or --help
displays a short help text, then exits. To view the man page, enter **man lsluns**.

Examples

- This example shows all LUNs for port 0x500507630300c562:

```
# lsluns --port 0x500507630300c562
Scanning for LUNs on adapter 0.0.5922
        at port 0x500507630300c562:
                0x4010400000000000
                0x4010400100000000
                0x4010400200000000
                0x4010400300000000
                0x4010400400000000
                0x4010400500000000
```

- This example shows all LUNs for an FCP device with bus ID 0.0.5922:

```
# lsluns -c 0.0.5922
        at port 0x500507630300c562:
                0x4010400000000000
                0x4010400100000000
                0x4010400200000000
                0x4010400300000000
                0x4010400400000000
                0x4010400500000000
        at port 0x500507630303c562:
                0x4010400000000000
                0x4010400100000000
                0x4010400200000000
                0x4010400300000000
                0x4010400400000000
                0x4010400500000000
```

- This example shows all active LUNs:

```
# lsluns -a
adapter = 0.0.5922
     port = 0x500507630300c562
          lun = 0x401040a200000000    /dev/sg0    Disk IBM:2107900
          lun = 0x401040a300000000(x) /dev/sg1    Disk IBM:2107900
          lun = 0x401040a400000000    /dev/sg2    Disk IBM:2107900
          lun = 0x401040a500000000    /dev/sg3    Disk IBM:2107900
     port = 0x500507630303c562
         lun = 0x401040a400000000     /dev/sg4    Disk IBM:2107900
          lun = 0x401040a500000000    /dev/sg5    Disk IBM:2107900
adapter = 0.0.593a
     port = 0x500507630307c562
          lun = 0x401040b000000000    /dev/sg6    Disk IBM:2107900
          lun = 0x401040b300000000    /dev/sg7    Disk IBM:2107900
          ...
```

The (x) in the output indicates that the device is encrypted.

lsmem - Show online status information about memory blocks

Use the **lsmem** command to list the ranges of available memory with their online status.

The listed memory blocks correspond to the memory block representation in sysfs. The command also shows the memory block size, the device size, and the amount of memory in online and offline state.

lsmem syntax

```
►►─lsmem──┬──────┬──────────────────────────────────────────►◄
          └─ -a ─┘
```

Where:

-a or --all
lists each individual memory block, instead of combining memory blocks with similar attributes.

-v or --version
displays the version number of **lsmem**, then exits.

-h or --help
displays a short help text, then exits. To view the man page, enter **man lsmem**.

The columns in the command output have this meaning:

Address range
Start and end address of the memory range.

Size Size of the memory range in MB (1024 x 1024 bytes).

State Indication of the online status of the memory range. State `on->off` means that the address range is in transition from online to offline.

Removable
`yes` if the memory range can be set offline, `no` if it cannot be set offline. A dash (-) means that the range is already offline. The kernel method that identifies removable memory ranges is heuristic and not exact. Occasionally, memory ranges are falsely reported as removable or falsely reported as not removable.

Device
Device number or numbers that correspond to the memory range.

A device represents a unit of memory for the hypervisor in control of the memory. The hypervisor cannot reuse a device unless the entire corresponding memory range is offline.

The memory units that you can set online or offline from Linux are memory blocks. In most memory configurations, there is a one-to-one mapping of devices and memory blocks or a mapping of multiple devices to a single memory block. In other configurations, multiple memory blocks might map to a single device. Memory might be used inefficiently if a device includes both online and offline memory blocks.

The **chmem** command with the size parameter automatically chooses the best suited device or devices for setting memory online or offline. The device size depends on the hypervisor and on the amount of total online and offline memory.

Examples

- The output of this command, shows ranges of adjacent memory blocks with similar attributes.

```
# lsmem
Address range                           Size (MB)  State    Removable  Device
==============================================================================
0x0000000000000000-0x000000000fffffff        256  online   no         0
0x0000000010000000-0x000000002fffffff        512  online   yes        1-2
0x0000000030000000-0x000000003fffffff        256  online   no         3
0x0000000040000000-0x000000006fffffff        768  online   yes        4-6
0x0000000070000000-0x00000000ffffffff       2304  offline  -          7-15

Memory device size  : 256 MB
Memory block size   : 256 MB
Total online memory : 1792 MB
Total offline memory: 2304 MB
```

- The output of this command, shows each memory block as a separate range.

```
# lsmem -a
Address range                           Size (MB)  State    Removable  Device
==============================================================================
0x0000000000000000-0x000000000fffffff        256  online   no         0
0x0000000010000000-0x000000001fffffff        256  online   yes        1
0x0000000020000000-0x000000002fffffff        256  online   yes        2
0x0000000030000000-0x000000003fffffff        256  online   no         3
0x0000000040000000-0x000000004fffffff        256  online   yes        4
0x0000000050000000-0x000000005fffffff        256  online   yes        5
0x0000000060000000-0x000000006fffffff        256  online   yes        6
0x0000000070000000-0x000000007fffffff        256  offline  -          7
0x0000000080000000-0x000000008fffffff        256  offline  -          8
0x0000000090000000-0x000000009fffffff        256  offline  -          9
0x00000000a0000000-0x00000000affffffff       256  offline  -          10
0x00000000b0000000-0x00000000bffffffff       256  offline  -          11
0x00000000c0000000-0x00000000cffffffff       256  offline  -          12
0x00000000d0000000-0x00000000dffffffff       256  offline  -          13
0x00000000e0000000-0x00000000effffffff       256  offline  -          14
0x00000000f0000000-0x00000000fffffffff       256  offline  -          15

Memory device size  : 256 MB
Memory block size   : 256 MB
Total online memory : 1792 MB
Total offline memory: 2304 MB
```

lsqeth - List qeth-based network devices

Use the **lsqeth** command to display a summary of information about qeth-based network devices.

Before you begin: To be able to use this command, you must also install **qethconf** (see "qethconf - Configure qeth devices" on page 637). You install both **qethconf** and **lsqeth** with the s390-tools RPM.

lsqeth syntax

```
►►─lsqeth──┬──────┬──┬──────────────────┬──────────────────────────────────►◄
           └─ -p─┘  └─ <interface>─────┘
```

Where:

-p or --proc
displays the interface information in the former `/proc/qeth` format. This option can generate input to tools that expect this particular format.

<interface>
limits the output to information about the specified interface only.

-v or --version
displays the version number of **lsqeth** and exits.

-h or --help
displays a short help text, then exits. To view the man page, enter **man lsqeth**.

Examples

- The following command lists information about interface eth0 in the default format:

```
# lsqeth eth0
Device name                     : eth0
---------------------------------------------
        card_type               : OSD_100
        cdev0                   : 0.0.f5a2
        cdev1                   : 0.0.f5a3
        cdev2                   : 0.0.f5a4
        chpid                   : B5
        online                  : 1
        portname                : no portname required
        portno                  : 0
        route4                  : no
        route6                  : no
        state                   : UP (LAN ONLINE)
        priority_queueing       : always queue 2
        fake_broadcast          : 0
        buffer_count            : 64
        large_send              : no
        isolation               : none
        sniffer                 : 0
```

- The following command lists information about all qeth-based interfaces in the former `/proc/qeth` format:

```
# lsqeth -p
devices                    CHPID interface  cardtype       port chksum prio-q'ing rtr4 rtr6 lay'2 cnt
-------------------------- ----- ---------- -------------- ---- ------ ---------- ---- ---- ----- -----
0.0.833f/0.0.8340/0.0.8341 xFE   hsi0       HiperSockets   0    sw     always_q_2 no   no   0     128
0.0.f5a2/0.0.f5a3/0.0.f5a4 xB5   eth0       OSD_1000       0    sw     always_q_2 no   no   1     64
0.0.fba2/0.0.fba3/0.0.fba4 xB0   eth1       OSD_1000       0    sw     always_q_2 no   no   0     64
```

lsreipl - List IPL and re-IPL settings

Use the **lsreipl** command to find out which boot device and which options are used if you issue the reboot command.

You can also display information about the current boot device.

lsreipl syntax

```
►►──lsreipl──┬──────┬──────────────────────────────────────────────────►◄
             └─ -i─┘
```

Where:

-i or --ipl
displays the IPL setting.

-v or --version
displays the version number of **lsreipl** and exits.

-h or --help
displays a short help text, then exits. To view the man page, enter **man lsreipl**.

By default the re-IPL device is set to the current IPL device. Use the chreipl command to change the re-IPL settings.

Examples

- This example shows the current re-IPL settings:

```
# lsreipl
Re-IPL type:     fcp
WWPN:            0x500507630300c562
LUN:             0x401040b300000000
Device:          0.0.1700
bootprog:        0
br_lba:          0
Loadparm:        "g2"
Bootparms:       ""
```

lsscm - List storage-class memory increments

Use the **lsscm** command to list status and other information about available storage-class memory increments.

lsscm syntax

```
►►─lsscm──┬──────┬──────────────────────────────────────────►◄
          ├─ -h─┤
          └─ -v─┘
```

Where:

-h or --help
displays help information for the command. To view the man page, enter **man lsscm**.

-v or --version
displays version information for the command.

In the output table, the columns have the following meaning:

SCM Increment
Starting address of the storage-class memory increment.

Size
Size of the block device that represents the storage-class memory increment.

Name
Name of the block device that represents the storage-class memory increment.

Rank
A quality ranking in the form of a number in the range 1 - 15 where a lower number means better ranking.

D_state
Data state of the storage-class memory increment. A number that indicates whether there is data on the increment. The data state can be:

1 The increment contains zeros only.

2 Data was written to the increment.

3 No data was written to the increment since the increment was attached.

O_state
Operation state of the storage-class memory increment.

Pers
Persistence attribute.

ResID
Resource identifier.

Examples

- This command lists all increments:

```
    # lsscm
 SCM Increment    Size    Name  Rank D_state O_state Pers ResID
-------------------------------------------------------------
0000000000000000 16384MB scma     1       2       1    2     1
0000000400000000 16384MB scmb     1       2       1    2     1
```

lsshut - List the current system shutdown actions

Use the **lsshut** command to see how the Linux instance is configured for the `halt`, `poff`, `reboot`, and `panic` system shutdown triggers.

For more information about the shutdown triggers and possible shutdown actions, see Chapter 7, "Shutdown actions," on page 83.

lsshut syntax

```
►►─lsshut──┬──────┬──────────────────────────────────────────────────►◄
           ├─ -h─┤
           └─ -v─┘
```

Where:

-v or --version
displays the version number of **lsshut** and exits.

-h or --help
displays a short help text, then exits. To view the man page, enter **man lsshut**.

Examples

- To query the configuration issue:

```
# lsshut
Trigger    Action
========================
Halt       stop
Panic      stop
Power off  vmcmd (LOGOFF)
Reboot     reipl
```

lstape - List tape devices

Use the **lstape** command to gather information about tape devices and display it in a summary format.

It gathers information about CCW-attached tape devices and tape devices that are attached to the SCSI bus from sysfs (see "Displaying tape information" on page 204).

For information about SCSI tape devices, the command uses the following sources for the information displayed:

- The IBMtape or the open source lin_tape driver.
- The sg_inq command from the scsi/sg3_utils package.
- The st (SCSI tape) device driver in the Linux kernel.

If you use the IBMtape or lin_tape driver, the sg_inq utility is required. If sg_inq is missing, certain information about the IBMtape or lin_tape driver cannot be displayed.

lstape syntax

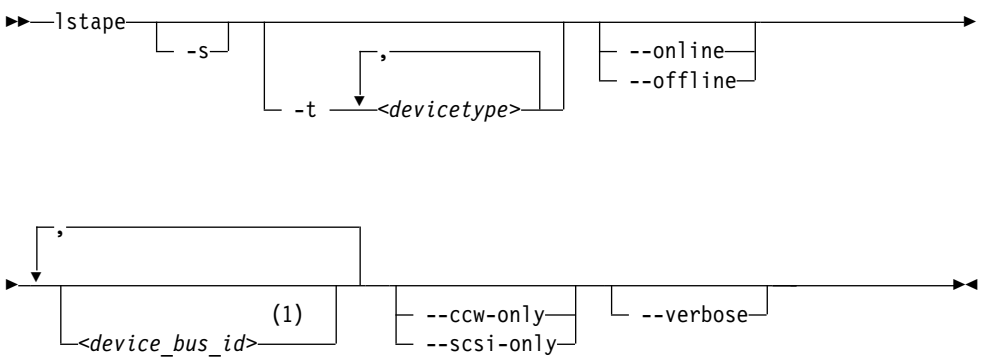

Notes:

1 specify the first device bus-ID with a leading blank.

Where:

-s or --shortid
strips the "0.<*n*>." from the device bus-IDs in the command output. For CCW-attached devices only.

-t or --type
limits the output to information about the specified type or types of CCW-attached devices only.

--ccw-only
limits the output to information about CCW-attached devices only.

--scsi-only
limits the output to information about tape devices that are attached to the SCSI bus.

--online | --offline
limits the output to information about online or offline CCW-attached tape devices only.

<device_bus_id>
limits the output to information about the specified tape device or devices only.

-V or --verbose
For tape devices attached to the SCSI bus only. Prints the serial of the tape and information about the FCP connection as an additional text line after each SCSI tape in the list.

-v or --version
displays the version of the command.

-h or --help
displays a short help text, then exits. To view the man page, enter **man lstape**.

Examples

- This command displays information about all tapes that are found, here one CCW-attached tape and one tape and changer device that is configured for zFCP:

```
#> lstape
FICON/ESCON tapes (found 1):
TapeNo  BusID      CuType/Model  DevType/Model  BlkSize  State   Op   MedState
0       0.0.0480   3480/01       3480/04        auto     UNUSED  ---  UNLOADED

SCSI tape devices (found 2):
Generic  Device       Target        Vendor     Model         Type     State
sg4      IBMchanger0  0:0:0:0       IBM        03590H11      changer  running
sg5      IBMtape0     0:0:0:1       IBM        03590H11      tapedrv  running
```

  If only the generic tape driver (st) and the generic changer driver (ch) are loaded, the output lists those names in the device section:

```
#> lstape
FICON/ESCON tapes (found 1):
TapeNo  BusID      CuType/Model  DevType/Model  BlkSize  State   Op    MedState
0       0.0.0480   3480/01       3480/04        auto     UNUSED  ---   UNLOADED

SCSI tape devices (found 2):
Generic Device       Target         Vendor     Model         Type     State
sg0     sch0         0:0:0:0        IBM        03590H11      changer  running
sg1     st0          0:0:0:1        IBM        03590H11      tapedrv  running
```

- This command displays information about all available CCW-attached tapes.

```
# lstape --ccw-only
TapeNo  BusID      CuType/Model DevType/DevMod  BlkSize State   Op      MedState
0       0.0.0132   3590/50      3590/11         auto    IN_USE  ---     LOADED
1       0.0.0110   3490/10      3490/40         auto    UNUSED  ---     UNLOADED
2       0.0.0133   3590/50      3590/11         auto    IN_USE  ---     LOADED
3       0.0.012a   3480/01      3480/04         auto    UNUSED  ---     UNLOADED
N/A     0.0.01f8   3480/01      3480/04         N/A     OFFLINE ---     N/A
```

- This command limits the output to tapes of type 3480 and 3490.

```
# lstape -t 3480,3490
TapeNo  BusID      CuType/Model DevType/DevMod  BlkSize State   Op      MedState
1       0.0.0110   3490/10      3490/40         auto    UNUSED  ---     UNLOADED
3       0.0.012a   3480/01      3480/04         auto    UNUSED  ---     UNLOADED
N/A     0.0.01f8   3480/01      3480/04         N/A     OFFLINE ---     N/A
```

- This command limits the output to those tapes of type 3480 and 3490 that are currently online.

```
# lstape -t 3480,3490 --online
TapeNo  BusID      CuType/Model DevType/DevMod  BlkSize State   Op      MedState
1       0.0.0110   3490/10      3490/40         auto    UNUSED  ---     UNLOADED
3       0.0.012a   3480/01      3480/04         auto    UNUSED  ---     UNLOADED
```

- This command limits the output to the tape with device bus-ID 0.0.012a and strips the "0.<*n*>." from the device bus-ID in the output.

```
# lstape -s 0.0.012a
TapeNo  BusID      CuType/Model DevType/DevMod  BlkSize State   Op      MedState
3       012a       3480/01      3480/04         auto    UNUSED  ---     UNLOADED
```

- This command limits the output to SCSI devices but gives more details. The serial numbers are only displayed if the **sg_inq** command is found on the system.

```
#> lstape --scsi-only --verbose
Generic Device       Target        Vendor     Model        Type       State
        HBA          WWPN                     Serial
sg0     st0          0:0:0:1       IBM        03590H11     tapedrv    running
        0.0.1708     0x500507630040727b       NO/INQ
sg1     sch0         0:0:0:2       IBM        03590H11     changer    running
        0.0.1708     0x500507630040727b       NO/INQ
```

Data fields for SCSI tape devices

There are specific data fields for SCSI tape devices.

Table 62. lstape data fields for SCSI tape devices

Attribute	Description
Generic	SCSI generic device file for the tape drive (for example, `/dev/sg0`). This attribute is empty if the **sg_inq** command is not available.
Device	Main device file for accessing the tape drive, for example: • `/dev/st0` for a tape drive that is attached through the Linux st device driver • `/dev/sch0` for a medium changer device that is attached through the Linux changer device driver • `/dev/IBMchanger0` for a medium changer that is attached through the IBMtape or lin_tape device driver • `/dev/IBMtape0` for a tape drive that is attached through the IBMtape or lin_tape device driver
Target	The ID in Linux used to identify the SCSI device.
Vendor	The vendor field from the tape drive.
Model	The model field from the tape drive.
Type	"Tapedrv" for a tape driver or "changer" for a medium changer.
State	The state of the SCSI device in Linux. This state is an internal state of the Linux kernel, any state other than "running" can indicate problems.

Table 62. lstape data fields for SCSI tape devices (continued)

Attribute	Description
HBA	The FCP device to which the tape drive is attached.
WWPN	The WWPN (worldwide port name) of the tape drive in the SAN.
Serial	The serial number field from the tape drive.

lszcrypt - Display cryptographic devices

Use the **lszcrypt** command to display information about cryptographic adapters that are managed by the cryptographic device driver and its AP bus attributes.

To set the attributes, use "chzcrypt - Modify the cryptographic configuration" on page 513. The following information can be displayed for each cryptographic adapter:

- The card type
- The online status
- The hardware card type
- The card capability
- The hardware queue depth
- The request count

The following AP bus attributes can be displayed:

- The AP domain
- The configuration timer
- The poll thread status
- The poll timeout
- The AP interrupt status

lszcrypt syntax

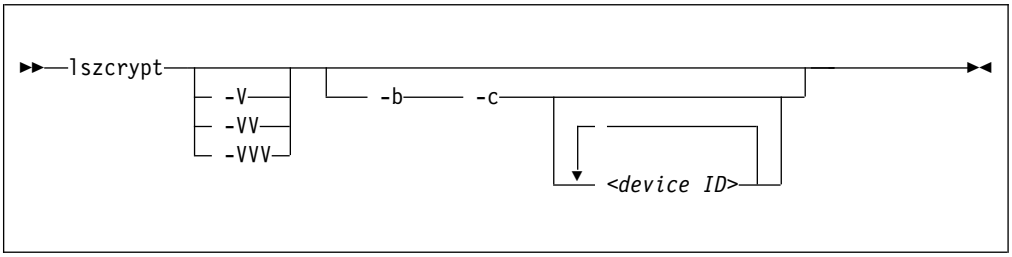

Where:

-V or --verbose, -VV, -VVV
increases the verbose level for cryptographic adapter information.

-V or --verbose
displays card type and online status.

-VV displays card type, online status, hardware card type, hardware queue depth, and request count.

-VVV displays card type, online status, hardware card type, hardware queue depth, request count, pending request queue count, outstanding request queue count, and installed function facilities.

<device ID>
specifies the cryptographic adapter that is displayed. A cryptographic adapter can be specified either in decimal notation or hexadecimal notation with a '0x' prefix. If no adapters are specified, information about all available adapters is displayed.

-b or --bus
displays the AP bus attributes.

-c or --capability
shows the capabilities of a cryptographic adapter of hardware type 6 or higher. The capabilities of a cryptographic adapter depend on the card type and the installed function facilities. A cryptographic adapter can provide one or more of the following capabilities:

- RSA 2K Clear Key
- RSA 4K Clear Key
- CCA Secure Key
- EP11 Secure Key
- Long RNG

-v or --version
displays version information.

-h or --help
displays a short help text, then exits. To view the man page, enter **man lszcrypt**.

Examples

These examples illustrate common uses for **lszcrypt**.

- To display information about all available cryptographic adapters:

```
# lszcrypt
```

This command displays output similar to the following example:

```
card00: CEX3A
card01: CEX3C
card02: CEX3A
card03: CEX3C
card04: CEX3C
card05: CEX3C
card06: CEX4A
card08: CEX4A
card09: CEX4P
card0a: CEX4P
card0b: CEX4C
```

- To display card type and online status of all available cryptographic adapters:

```
# lszcrypt -V
```

This command displays output similar to the following example:

```
card00: CEX3A online
card01: CEX3C online
card02: CEX3A offline
card03: CEX3C online
card04: CEX3C online
card05: CEX3C online
card06: CEX4A offline
card08: CEX4A online
card09: CEX4P online
card0a: CEX4P online
card0b: CEX4C online
```

- To display card type, online status, hardware card type, hardware queue depth, and request count for cryptographic adapters 00, 02, and 0a.:

```
# lszcrypt -VV 0x00 0x02 0x0b
```

This command displays output similar to the following example:

```
card00: CEX3A online  hwtype=8  depth=8 request_count=0
card02: CEX3A offline hwtype=8  depth=8 request_count=0
card0b: CEX4C online  hwtype=10 depth=8 request_count=292
```

Tip: In the adapter specification you can also use one-digit hexadecimal or decimal notation. The specifications `0x0 0x2 0xb`, `0x00 0x02 0x0b` and `0 2 11` are all equivalent.

- To display the device ID and the installed function facility in hexadecimal notation as well as card type, online status, hardware card type, hardware queue depth, request count, pending request queue count, outstanding request queue count, and installed function facilities:

```
# lszcrypt -VVV 0x00 0x02 0x0b
```

This command displays output similar to the following example:

```
card00: CEX3A online  hwtype=8  depth=8 request_count=0   pendingq_count=0 requestq_count=0 functions=0x60000000
card02: CEX3A offline hwtype=8  depth=8 request_count=0   pendingq_count=0 requestq_count=0 functions=0x60000000
card0b: CEX4C online  hwtype=10 depth=8 request_count=292 pendingq_count=0 requestq_count=0 functions=0x90000000
```

- To display AP bus information:

```
# lszcrypt -b
```

This command displays output similar to the following example:

```
ap_domain=8
ap_interrupts are enabled
config_time=30 (seconds)
poll_thread is disabled
poll_timeout=250000 (nanoseconds)
```

- To display the capabilities for the cryptographic adapter with device index 0x0b:

```
# lszcrypt -c 0x0b
```

This command displays output similar to the following example:

```
Coprocessor card0b provides capability for:
CCA Secure Key
RSA 4K Clear Key
Long RNG
```

lszdev - Display z Systems device configurations

Use the **lszdev** command to display the configuration of devices and device drivers that are specific to IBM z Systems. Supported device types include storage devices (DASD and zFCP) and networking devices (QETH and LCS).

Note: The **lszdev** command does not display persistent configuration settings made with tools provided by SUSE, for example YaST.

Configuration information is taken from two sources: the active configuration of the currently running system, and the persistent configuration stored in configuration files. By default **lszdev** displays information from both the active and the persistent configuration. **lszdev** displays the configuration information in either list format (the default) or detailed format.

The **lszdev** command supports two different views:

- The list view provides overview information for selected devices in list form with configurable columns
- The details view provides detailed per-device information

lszdev main syntax

```
►►─lszdev──┬─┬─ Device selection ─┬─┬──┬─ --persistent --active ─┬──┬──────────────────────────────►
           └─┴─ Device type selection ─┴─┘  ├─ --active ──────────┤  └─ --info ─┘
                                            └─ --persistant ──────┘

►──┬──┬──┬──────────────────────────────────────────────────────────────────────────────────────►
   │  │  │                  ┌──,──────────┐                                                    │
   │  │  └─ --columns ──────┴──<column_name>┴─┘  └─ --no-headings ─┘  └─ --base <path> | <key=value> ─┘
   │  └─ --pairs ──────────────────────────────────────────────────────────────────────────────┘

►──┬─ --quiet ─┬──────────────────────────────────────────────────────────────────────────────►◄
   └─ --verbose ─┘
```

Device selection:

```
├──┬──────────┬──┬──────────────────────────────┬──┬─ --all ──────────────────────────────────┬──►
   └─ <type> ─┘  │                ┌──,──────────┐  │  │                                          │
                 ├─┴─<device>─────┴─────────────┴─┤  │  ┌──────────────────────────────────────┐ │
                 └─<from_dev>-<to_dev>─────────────┘  │  │                                      │ │
                                                      └──┴─┬─ --by-attrib <key=value> | <key!=value> ─┴─┘
                                                           ├─ --by-interface <interface> ──────────┤
                                                           ├─ --by-node <device_node> ─────────────┤
                                                           └─ --by-path <path> ────────────────────┘

►──┬─ --configured ─┬──┬─ --existing ─┬──┬─ --online ─┬──────────────────────────────────────────┤
   │                │  │              │  └─ --offline ─┘
```

Device type selection:

```
├──┬─ <type> ─┬── --type ──────────────────────────────────────────────────────────────────────┤
```

lszdev help functions

```
►►─lszdev──┬─ --list-types ─┬──────────────────────────────────────────────────────────────►◄
           ├─ --list-columns ─┤
           ├─ --help ─────────┤
           └─ --version ──────┘
```

Where:

<type>
restricts the output to the specified device type. A device type typically corresponds to a device driver. Multiple device types are sometimes provided for the same driver, for example, both "dasd-eckd" and "dasd-fba" are related to the DASD device driver. You can work with types in the following ways:

- To display data for devices with matching type and ID only, specify a device type and a device ID, for example:

```
# lszdev dasd 0.0.8000
```

- To display the configuration of the device type itself, specify a device type together with the `--type` option, for example:

```
# lszdev dasd --type
```

To get a list of supported device types, use the `--list-types` option.

<device>
limits the output to information about a single device or a range of devices by device ID. To select a range of devices, specify the ID of the first and the last device in the range separated by a hyphen (-). Specify multiple IDs or ID ranges by separating IDs with a comma (,).

--all
lists all existing and configured devices. This option is the default.

--by-attrib <key=value> | <key!=value>
selects devices with a specified attribute, <*key*> that has a value of <*value*>. When specified as <*key!=value*>, lists all devices that do not provide an attribute named <*key*> with a value of <*value*>.

Tip: You can use the `--list-attributes` option to display a list of available attributes and the `--help-attribute` to get more detailed information about a specific attribute.

--by-interface <interface>
selects devices by network interface, for example, eth0. The <*interface*> parameter must be the name of an existing networking interface.

--by-node <node>
selects devices by device node, for example, `/dev/sda`. The <*node*> must be the path to a block device or character device special file.

Note: If <*node*> is the device node for a logical device (such as a device mapper device), **lszdev** tries to resolve the corresponding physical device nodes. The **lsblk** tool must be available for this resolution to work.

--by-path <path>
selects devices by file-system path, for example, `/usr`. The <*path*> parameter can be the mount point of a mounted file system, or a path on that file system.

Note: If the file system that provides <*path*> is stored on multiple physical devices (such as supported by btrfs), **lszdev** tries to resolve the corresponding physical device nodes. The **lsblk** tool must be available and the file system must provide a valid UUID for this resolution to work.

--configured
narrows the selection to those devices for which a persistent configuration exists.

--existing
narrows the selection to devices that are present in the active configuration.

--online
narrows the selection to devices that are enabled in the active configuration.

--offline
narrows the selection to devices that are disabled in the active configuration.

-a or --active
lists information from the active configuration only. Restricts output to information obtained from the active configuration, that is, information from the running system.

-p or --persistent
restricts output to information from the persistent configuration.

-i or --info
displays detailed information about the configuration of the selected device or device type.

-c or --columns <*columns*>
specifies a comma-separated list of columns to display.

Example:

```
# lszdev --columns TYPE,ID
```

Tip: To get a list of supported column names, use the `--list-columns` option.

-n or --no-headings
suppresses column headings for list output.

--pairs
produces output in <*key="value"*> format. Use this option to generate output in a format more suitable for processing by other programs. In this format, column values are prefixed with the name of the corresponding column. Values are enclosed in double quotation marks. The **lszdev** command automatically escapes quotation marks and slashes that are part of the value string.

--base <*path*> | <*key=value*>
changes file system paths that are used to access files. If <*path*> is specified without an equal sign (=), it is used as base path for accessing files in the active and persistent configuration. If the specified parameter is in <*key=value*> format, only those paths that begin with <*key*> are modified. For these paths, the initial <*key*> portion is replaced with <*value*>.

Example:

```
# lszdev --persistent --base /etc=/mnt/etc
```

-t or --type <*device_type*>
lists information about a device type. Use this option to display configuration information of a device type instead of a device.

-q or --quiet
prints only minimal run-time information.

-V or --verbose
prints additional run-time information.

-L or --list-types
lists all available device types that you can use with the `--type` option.

-l or --list-columns
lists all available columns that you can use with the `--columns` option.

-h or --help
displays help information for the command.

-v or --version
displays the version number of **lszdev**, then exits.

Input files

The **lszdev** command uses these input files:

/etc/udev/rules.d/
lszdev reads udev rules that represent the persistent configuration of devices from this directory. The udev rules are named `41-<device subtype>-<id>.rules`.

/etc/modprobe.d/
lszdev reads modprobe configuration files that represent the persistent configuration of certain device types from this directory. File names start with `s390x-`.

Examples

- To display a list of all devices:
```
# lszdev
```
- To return type and ID of root device in machine-readable format:
```
# lszdev --columns TYPE,ID --by-path /
```
- To display DASD driver settings:
```
# lszdev --type dasd
```

lszfcp - List zfcp devices

Use the **lszfcp** command to gather information about zfcp devices, ports, units, and their associated class devices from sysfs and to display it in a summary format.

lszfcp syntax

```
>>-lszfcp-+-------+-+-------+-+-------+-+-------+-+-------+-------------------------------------->
          |  -H   | |  -P   | |  -D   | |  -a   | |  -V   |
          +-------+ +-------+ +-------+ +-------+ +-------+

>-+-------------------------------+-+-------------------+-+-------------------+-----------------><
  |                               | |  -s /sys          | |                   |
  |  -b <device_bus_id>           | |                   | |  -s <mount_point> |
  |  --busid=<device_bus_id>      | |                   | |  --sysfs=<mount_point>
  |  -p <port_name>               | |                   | |                   |
  |  --wwpn=<port_name>           | |                   | |                   |
  |  -l  <lun>                    | |                   | |                   |
  |  --lun=<lun>                  | |                   | |                   |
  +-------------------------------+ +-------------------+ +-------------------+
```

Where:

-H or --hosts
shows information about hosts.

-P or --ports
shows information about ports.

-D or --devices
shows information about SCSI devices.

-a or --attributes
shows all attributes (implies **-V**).

-V or --verbose
shows sysfs paths of associated class and bus devices.

-b or --busid *<device_bus_id>*
limits the output to information about the specified device.

-p or --wwpn *<port_name>*
limits the output to information about the specified port name.

-l or --lun *<lun>*
limits the output to information about the specified LUN.

-s or --sysfs *<mount_point>*
specifies the mount point for sysfs.

-v or --version
displays version information.

-h or --help
displays a short help text, then exits. To view the man page, enter **man lszfcp**.

Examples

- This command displays information about all available hosts, ports, and SCSI devices.

```
# lszfcp -H -D -P
0.0.3d0c host0
0.0.500c host1
...
0.0.3c0c host5
0.0.3d0c/0x500507630300c562 rport-0:0-0
0.0.3d0c/0x50050763030bc562 rport-0:0-1
0.0.3d0c/0x500507630303c562 rport-0:0-2
0.0.500c/0x50050763030bc562 rport-1:0-0
...
0.0.3c0c/0x500507630303c562 rport-5:0-2
0.0.3d0c/0x500507630300c562/0x4010403200000000 0:0:0:0
0.0.3d0c/0x500507630300c562/0x4010403300000000 0:0:0:1
0.0.3d0c/0x50050763030bc562/0x4010403200000000 0:0:1:0
0.0.3d0c/0x500507630303c562/0x4010403200000000 0:0:2:0
0.0.500c/0x50050763030bc562/0x4010403200000000 1:0:0:0
...
0.0.3c0c/0x500507630303c562/0x4010403200000000 5:0:2:0
```

- This command shows SCSI devices and limits the output to the devices that are attached through the FCP device with bus ID 0.0.3d0c:

```
# lszfcp -D -b 0.0.3d0c
0.0.3d0c/0x500507630300c562/0x4010403200000000 0:0:0:0
0.0.3d0c/0x500507630300c562/0x4010403300000000 0:0:0:1
0.0.3d0c/0x50050763030bc562/0x4010403200000000 0:0:1:0
0.0.3d0c/0x500507630303c562/0x4010403200000000 0:0:2:0
```

mon_fsstatd – Monitor z/VM guest file system size

The **mon_fsstatd** command is a user space daemon that collects physical file system size data from Linux on z/VM.

The daemon periodically writes the data as defined records to the z/VM monitor stream using the monwriter character device driver.

You can start the daemon with a service script `/etc/init.d/mon_statd` or call it manually. When it is called with the service utility, it reads the configuration file `/etc/sysconfig/mon_statd`.

Before you begin:

- Install the monwriter device driver and set up z/VM to start the collection of monitor sample data. See Chapter 33, "Writing z/VM monitor records," on page 393 for information about the setup for and usage of the monwriter device driver.
- Customize the configuration file `/etc/sysconfig/mon_statd` if you plan to call it with the service utility.

The following publications provide general information about DCSSs, DIAG x'DC', CP commands, and APPLDATA:

- See *z/VM Saved Segments Planning and Administration*, SC24-6229 for general information about DCSSs.
- See *z/VM CP Programming Services*, SC24-6179 for information about the DIAG x'DC' instruction.
- See *z/VM CP Commands and Utilities Reference*, SC24-6175 for information about the CP commands.
- See *z/VM Performance*, SC24-6208 for information about monitor APPLDATA.

You can run the **mon_fsstatd** command in two ways:

- Calling mon_statd with the service utility. This method reads the configuration file `/etc/sysconfig/mon_statd`. The mon_statd service script also controls other daemons, such as mon_procd.
- Calling mon_fsstatd from a command line.

mon_statd service utility syntax

If you run the **mon_fsstatd** daemon through the service utility, you configure the daemon through specifications in a configuration file.

```
►►──┬─service mon_statd──────┬──┬─ start──┬──────────────────────────────►◄
    └─/etc/init_d/mon_statd──┘  ├─ stop───┤
                                ├─ status─┤
                                └─ restart┘
```

Where:

start
enables monitoring of guest file system size, by using the configuration in `/etc/sysconfig/mon_statd`.

stop
disables monitoring of guest file system size.

status
shows current status of guest file system size monitoring.

restart
stops and restarts monitoring. Useful to re-read the configuration file when it was changed.

Configuration file keywords

FSSTAT_INTERVAL="<*n*>"
specifies the wanted sampling interval in seconds.

FSSTAT="yes | no"
specifies whether to enable the mon_fsstatd daemon. Set to "yes" to enable the daemon. Anything other than "yes" is interpreted as "no".

Examples of service utility use

- This example sets the sampling interval to 30 seconds and enables the mon_fsstatd daemon:

```
FSSTAT_INTERVAL="30"
FSSTAT="yes"
```

Example of mon_statd use. Note that your output can look different and include messages for other daemons, such as mon_procd:

- To enable guest file system size monitoring:

```
> service mon_statd start
...
Starting mon_fsstatd:[ OK ]
...
```

- To display the status:

```
> service mon_statd status
...
mon_fsstatd (pid 1075, interval: 30) is running.
...
```

- To disable guest file system size monitoring:

```
> service mon_statd stop
...
Stopping mon_fsstatd:[ OK ]
...
```

- To display the status again and check that monitoring is now disabled:

```
> service mon_statd status
...
mon_fsstatd is not running
...
```

- To restart the daemon and re-read the configuration file:

```
> service mon_statd restart
...
stopping mon_fsstatd:[ OK ]
starting mon_fsstatd:[ OK ]
...
```

mon_fsstatd command-line syntax

If you call the **mon_fsstatd** daemon from the command line, you configure the daemon through command parameters.

```
                  ┌─ -i 60──────────┐
►►─mon_fsstatd────┼─────────────────┼──┬──────────────────────────────────►◄
                  └─ -i <seconds>───┘  └─ -a──┘
```

Where:

-i or --interval <*seconds*>
specifies the wanted sampling interval in seconds.

-a or --attach
runs the daemon in the foreground.

-v or --version
displays version information for the command.

-h or --help
displays a short help text, then exits. To view the man page, enter **man mon_fsstatd**.

Examples of command-line use

- To start mon_fsstatd with default setting:

```
> mon_fsstatd
```

- To start mon_fsstatd with a sampling interval of 30 seconds:

```
> mon_fsstatd -i 30
```

- To start mon_fsstatd and have it run in the foreground:

```
> mon_fsstatd -a
```

- To start mon_fsstatd with a sampling interval of 45 seconds and have it run in the foreground:

```
> mon_fsstatd -a -i 45
```

Processing monitor data

The mon_fsstatd daemon writes physical file system size data for Linux on z/VM to the z/VM monitor stream.

The following is the format of the file system size data that is passed to the z/VM monitor stream. One sample monitor record is written for each physical file system that is mounted at the time of the sample interval. The monitor data in each record contains a header consisting of a time stamp, the length of the data, and an offset. The header is followed by the file system data (as obtained from statvfs). The file system data fields begin with "fs_".

Table 63. File system size data format

Type	Name	Description
__u64	time_stamp	Time at which the file system data was sampled.
__u16	data_len	Length of data that follows the header.
__u16	data_offset	Offset from start of the header to the start of the file system data (that is, to the fields that begin with fs_).
__u16	fs_name_len	Length of the file system name. The file system name can be too long to fit in the monitor record. If so, this length is the portion of the name that is contained in the monitor record.
char [fs_name_len]	fs_name	The file system name. If the name is too long to fit in the monitor record, the name is truncated to the length in the fs_name_len field.
__u16	fs_dir_len	Length of the mount directory name. The mount directory name can be too long to fit in the monitor record. If so, this length is the portion of the name that is contained in the monitor record.
char[fs_dir_len]	fs_dir	The mount directory name. If the name is too long to fit in the monitor record, the name is truncated to the length in the fs_dir_len field.
__u16	fs_type_len	Length of the mount type. The mount type can be too long to fit in the monitor record. If so, this length is the portion that is contained in the monitor record.
char[fs_type_len]	fs_type	The mount type (as returned by getmntent). If the type is too long to fit in the monitor record, the type is truncated to the length in the fs_type_len field.
__u64	fs_bsize	File system block size.
__u64	fs_frsize	Fragment size.
__u64	fs_blocks	Total data blocks in file system.
__u64	fs_bfree	Free blocks in fs.
__u64	fs_bavail	Free blocks avail to non-superuser.
__u64	fs_files	Total file nodes in file system.
__u64	fs_ffree	Free file nodes in fs.
__u64	fs_favail	Free file nodes available to non-superuser.
__u64	fs_flag	Mount flags.

Use the time_stamp to correlate all file systems that were sampled in a given interval.

Reading the monitor data

All records that are written to the z/VM monitor stream begin with a product identifier.

The product ID is a 16-byte structure of the form ppppppffnvvrrmm, where for records that are written by mon_fsstatd, these values are:

ppppppp
is a fixed ASCII string LNXAPPL.

ff is the application number for mon_fsstatd = x'0001'.

n is the record number = x'00'.

vv is the version number = x'0000'.

rr is reserved for future use and should be ignored.

mm is reserved for mon_fsstatd and should be ignored.

Note: Though the mod_level field (mm) of the product ID varies, there is no relationship between any particular mod_level and file system. The mod_level field should be ignored by the reader of this monitor data.

There are many tools available to read z/VM monitor data. One such tool is the Linux monreader character device driver. For more information about monreader, see Chapter 34, “Reading z/VM monitor records,” on page 397.

mon_procd – Monitor Linux on z/VM

The **mon_procd** command is a user space daemon that gathers system summary information and information about up to 100 concurrent processes on Linux on z/VM.

The daemon writes this data to the z/VM monitor stream by using the monwriter character device driver. You can start the daemon with a service script `/etc/init.d/mon_statd` or call it manually. When it is called with the service utility, it reads the configuration file `/etc/sysconfig/mon_statd`.

Before you begin:

- Install the monwriter device driver and set up z/VM to start the collection of monitor sample data. See Chapter 33, "Writing z/VM monitor records," on page 393 for information about the setup for and usage of the monwriter device driver.
- Customize the configuration file `/etc/sysconfig/mon_statd` if you plan to call it with the service utility.
- The Linux instance on which the proc_mond deamon runs requires a z/VM guest virtual machine with the OPTION APPLMON statement in the CP directory entry.

The following publications provide general information about DCSSs, CP commands, and APPLDATA:

- See *z/VM Saved Segments Planning and Administration*, SC24-6229 for general information about DCSSs.
- See *z/VM CP Commands and Utilities Reference*, SC24-6175 for information about the CP commands.
- See *z/VM Performance*, SC24-6208 for information about monitor APPLDATA.

You can run the **mon_procd** command in two ways.

- Calling **mon_procd** with the service utility. Use this method when the mon_statd service script is installed in `/etc/init.d`. This method reads the configuration file `/etc/sysconfig/mon_statd`. The mon_statd service script also controls other daemons, such as mon_fsstatd.
- Calling **mon_procd** manually from a command line.

mon_statd service utility syntax

If you run the **mon_procd** daemon through the service utility, you configure the daemon through specifications in a configuration file.

```
►►──┬─service mon_statd──────┬──┬─ start──┬──────────────────────────────►◄
    └─/etc/init_d/mon_statd──┘  ├─ stop───┤
                                ├─ status─┤
                                └─ restart┘
```

Where:

start
enables monitoring of guest process data, using the configuration in `/etc/sysconfig/mon_statd`.

stop
disables monitoring of guest process data.

status
shows current status of guest process data monitoring.

restart
stops and restarts guest process data monitoring. Useful in order to re-read the configuration file when it has changed.

Configuration file keywords

PROC_INTERVAL="<*n*>"
specifies the desired sampling interval in seconds.

PROC="yes | no"
specifies whether to enable the mon_procd daemon. Set to "yes" to enable the daemon. Anything other than "yes" will be interpreted as "no".

Examples of service utility use

- This example sets the sampling interval to 30 seconds and enables the mon_procd:

```
PROC_INTERVAL="30"
PROC="yes"
```

Example of mon_statd use (note that your output might look different and include messages for other daemons, such as mon_fsstatd):

- To enable guest process data monitoring:

```
> service mon_statd start
...
Starting mon_procd:[ OK ]
...
```

- To display the status:

```
> service mon_statd status
...
mon_procd (pid 1075, interval: 30) is running.
...
```

- To disable guest process data monitoring:

```
> service mon_statd stop
...
Stopping mon_procd:[ OK ]
...
```

- To display the status again and check that monitoring is now disabled:

```
> service mon_statd status
...
mon_procd is not running
...
```

- To restart the daemon and re-read the configuration file:

```
> service mon_statd restart
...
stopping mon_procd:[ OK ]
starting mon_procd:[ OK ]
...
```

mon_procd command-line syntax

If you call the **mon_procd** daemon from the command line, you configure the daemon through command parameters.

```
                 ┌─ -i 60──────────┐
►►─mon_procd─────┼─────────────────┼──┬──────┬──────────────────────────────►◄
                 └─ -i <seconds>───┘  └─ -a──┘
```

Where:

-i or --interval <*seconds*>
specifies the wanted sampling interval in seconds.

-a or --attach
runs the daemon in the foreground.

-v or --version
displays version information for the command.

-h or --help
displays a short help text, then exits. To view the man page, enter **man mon_procd**.

Examples of command-line use

- To start mon_procd with default setting:

```
> mon_procd
```

- To start mon_procd with a sampling interval of 30 seconds:

```
> mon_procd -i 30
```

- To start mon_procd and have it run in the foreground:

```
> mon_procd -a
```

- To start mon_procd with a sampling interval of 45 seconds and have it run in the foreground:

```
> mon_procd -a -i 45
```

Processing monitor data

The mon_procd daemon writes process data to the z/VM monitor stream.

The data includes summary information and information of each process for up to 100 processes currently being managed by an instance of Linux on z/VM to the z/VM monitor stream.

At the time of the sample interval, one sample monitor record is written for system summary data, then one sample monitor record is written for each process for up to 100 processes currently being managed by the Linux instance. If more than 100 processes exist in a Linux instance at a given time, processes are sorted by the sum of CPU and memory usage percentage values and only the top 100 processes' data is written to the z/VM monitor stream.

The monitor data in each record begins with a header (a time stamp, the length of the data, and the offset). The data after the header depends on the field "record number" of the 16-bit product ID and can be summary data or process data. See “Reading the monitor data” on page 633 for details. The following is the format of system summary data passed to the z/VM monitor stream.

Table 64. System summary data format

Type	Name	Description
__u64	time_stamp	Time at which the process data was sampled.
__u16	data_len	Length of data following the header.
__u16	data_offset	Offset from start of the header to the start of the process data.
__u64	uptime	Uptime of the Linux instance.
__u32	users	Number of users on the Linux instance.
char[6]	loadavg_1	Load average over the last one minute.
char[6]	loadavg_5	Load average over the last five minutes.
char[6]	loadavg_15	Load average over the last 15 minutes.
__u32	task_total	total number of tasks on the Linux instance.
__u32	task_running	Number of running tasks.
__u32	task_sleeping	Number of sleeping tasks.
__u32	task_stopped	Number of stopped tasks.
__u32	task_zombie	Number of zombie tasks.
__u32	num_cpus	Number of CPUs.
__u16	puser	A number representing (100 * percentage of total CPU time used for normal processes executing in user mode).
__u16	pnice	A number representing (100 * percentage of total CPU time used for niced processes executing in user mode).
__u16	psystem	A number representing (100 * percentage of total CPU time used for processes executing in kernel mode).
__u16	pidle	A number representing (100 * percentage of total CPU idle time).
__u16	piowait	A number representing (100 * percentage of total CPU time used for I/O wait).
__u16	pirq	A number representing (100 * percentage of total CPU time used for interrupts).

Table 64. System summary data format (continued)

Type	Name	Description
__u16	psoftirq	A number representing (100 * percentage of total CPU time used for softirqs).
__u16	psteal	A number representing (100 * percentage of total CPU time spent in stealing).
__u64	mem_total	Total memory in KB.
__u64	mem_used	Used memory in KB.
__u64	mem_free	Free memory in KB.
__u64	mem_buffers	Memory in buffer cache in KB.
__u64	mem_pgpgin	Data read from disk in KB.
__u64	mem_pgpgout	Data written to disk in KB
__u64	swap_total	Total swap memory in KB.
__u64	swap_used	Used swap memory in KB.
__u64	swap_free	Free swap memory in KB.
__u64	swap_cached	Cached swap memory in KB.
__u64	swap_pswpin	Pages swapped in.
__u64	swap_pswpout	Pages swapped out.

The following is the format of a process information data passed to the z/VM monitor stream.

Table 65. Process data format

Type	Name	Description
__u64	time_stamp	Time at which the process data was sampled.
__u16	data_len	Length of data following the header.
__u16	data_offset	Offset from start of the header to the start of the process data.
__u32	pid	ID of the process.
__u32	ppid	ID of the process parent.
__u32	euid	Effective user ID of the process owner.
__u16	tty	Device number of the controlling terminal or 0.
__s16	priority	Priority of the process
__s16	nice	Nice value of the process.
__u32	processor	Last used processor.
__u16	pcpu	A number representing (100 * percentage of the elapsed cpu time used by the process since last sampling).
__u16	pmem	A number representing (100 * percentage of physical memory used by the process).
__u64	total_time	Total cpu time the process has used.
__u64	ctotal_time	Total cpu time the process and its dead children has used.
__u64	size	Total virtual memory used by the task in KB.
__u64	swap	Swapped out portion of the virtual memory in KB.
__u64	resident	Non-swapped physical memory used by the task in KB.

Table 65. Process data format (continued)

Type	Name	Description
__u64	trs	Physical memory devoted to executable code in KB.
__u64	drs	Physical memory devoted to other than executable code in KB.
__u64	share	Shared memory used by the task in KB.
__u64	dt	Dirty page count.
__u64	maj_flt	Number of major page faults occurred for the process.
char	state	Status of the process.
__u32	flags	The process current scheduling flags.
__u16	ruser_len	Length of real user name of the process owner and should not be larger than 64.
char[ruser_len]	ruser	Real user name of the process owner. If the name is longer than 64, the name is truncated to the length 64.
__u16	euser_len	Length of effective user name of the process owner and should not be larger than 64.
char[euser_len]	euser	Effective user name of the process owner. If the name is longer than 64, the name is truncated to the length 64.
__u16	egroup_len	Length of effective group name of the process owner and should not be larger than 64.
char [egroup_len]	egroup	Effective group name of the process owner. If the name is longer than 64, the name is truncated to the length 64.
__u16	wchan_len	Length of sleeping in function's name and should not be larger than 64.
char[wchan_len]	wchan_name	Name of sleeping in function or '-'. If the name is longer than 64, the name is truncated to the length 64.
__u16	cmd_len	Length of command name or program name used to start the process and should not be larger than 64.
char[cmd_len]	cmd	Command or program name used to start the process. If the name is longer than 64, the name is truncated to the length 64.
__u16	cmd_line_len	Length of command line used to start the process and should not be larger than 1024.
char [cmd_line_len]	cmd_line	Command line used to start the process. If the name is longer than 1024, the name is truncated to the length 1024.

Use the time_stamp to correlate all process information that were sampled in a given interval.

Reading the monitor data

All records written to the z/VM monitor stream begin with a product identifier.

The product ID is a 16-byte structure of the form ppppppppffnvvrrmm, where for records written by mon_procd, these values will be:

ppppppp
is a fixed ASCII string LNXAPPL.

ff is the application number for mon_procd = x'0002'.

n is the record number as follows:
- x'00' indicates summary data.
- x'01' indicates task data.

vv is the version number = x'0000'.

rr is the release number, which can be used to mark different versions of process APPLDATA records.

mm is reserved for mon_procd and should be ignored.

Note: Though the mod_level field (mm) of the product ID will vary, there is no relationship between any particular mod_level and process. The mod_level field should be ignored by the reader of this monitor data.

This item uses at most 101 monitor buffer records from the monwriter device driver. Since a maximum number of buffers is set when a monwriter module is loaded, the maximum number of buffers must not be less than the sum of buffer records used by all monwriter applications.

There are many tools available to read z/VM monitor data. One such tool is the Linux monreader character device driver. See Chapter 34, “Reading z/VM monitor records,” on page 397 for more information about monreader.

qetharp - Query and purge OSA and HiperSockets ARP data

Use the **qetharp** command to query and purge address data such as MAC and IP addresses from the ARP cache of the OSA and HiperSockets hardware.

For OSA hardware, **qetharp** can also modify the cache.

Before you begin:

- The **qetharp** command applies only to devices in layer 3 mode (see “Layer 2 and layer 3” on page 223).
- The **qetharp** command supports IPv6 only for real HiperSockets and z/VM guest LAN HiperSockets.
- For HiperSockets, z/VM guest LAN and VSWITCH interfaces, the **qetharp** command supports only the `--query` option.

qetharp syntax

```
►►──qetharp──┬─┬─────┬──┬──────┬─ -q <interface>────────────────────────┬────────►◄
             │ ├─ -n─┤  └─ -6──┘                                         │
             │ └─ -c─┘                                                   │
             ├─ -a <interface>── -i <ip_address>── -m <mac_address>──────┤
             ├─ -d <interface>── -i <ip_address>─────────────────────────┤
             └─ -p <interface>───────────────────────────────────────────┘
```

Where:

-q or --query
shows the address resolution protocol (ARP) information about the specified network interface. Depending on the device that the interface was assigned to, this information is obtained from an OSA feature's ARP cache or a HiperSockets ARP cache.

The default command output shows symbolic host names and includes only numerical addresses for host names that cannot be resolved. Use the **-n** option to show numerical addresses instead of host names.

By default, qetharp omits IPv6 related information. Use the **-6** option to include IPv6 information for HiperSockets.

<interface>
specifies the qeth interface to which the command applies.

-n or --numeric
shows numeric addresses instead of trying to determine symbolic host names. This option can be used only with the **-q** option.

-c or --compact
limits the output to numeric addresses only. This option can be used only with the **-q** option.

-6 or --ipv6
includes IPv6 information for HiperSockets. For real HiperSockets, shows the IPv6 addresses. For guest LAN HiperSockets, shows the IPv6 to MAC address mappings. This option can be used only with the **-q** option.

-a or --add
adds a static ARP entry to the OSA adapter. Static entries can be deleted with **-d**.

-d or --delete
deletes a static ARP entry from the OSA adapter. Static entries are created with **-a**.

-p or --purge
flushes the ARP cache of the OSA. The cache contains dynamic ARP entries, which the OSA adapter creates through ARP queries. After flushing the cache, the OSA adapter creates new dynamic entries. This option works only with OSA devices. qetharp returns immediately.

-i <*ip_address*> or --ip <*ip_address*>
specifies the IP address to be added to or removed from the OSA adapter.

-m <*mac_address*> or --mac <*mac_address*>
specifies the MAC address to be added to the OSA adapter.

-v or --version
shows version information and exits

-h or --help
displays a short help text, then exits. To view the man page, enter **man qetharp**.

Examples

- Show all ARP entries of the OSA defined as eth0:

```
# qetharp -q eth0
```

- Show all ARP entries of the HiperSockets interface that is defined as hsi0 including IPv6 entries:

```
qetharp -6q hsi0
```

- Show all ARP entries of the OSA defined as eth0, without resolving host names:

```
# qetharp -nq eth0
```

- Show all ARP entries, including IPv6 entries, of the HiperSockets interface that is defined as hsi0 without resolving host names:

```
qetharp -n6q hsi0
```

- Flush the OSA ARP cache for eth0:

```
# qetharp -p eth0
```

- Add a static entry for eth0 and IP address 1.2.3.4 to the OSA ARP cache, with MAC address aa:bb:cc:dd:ee:ff:

```
# qetharp -a eth0 -i 1.2.3.4 -m aa:bb:cc:dd:ee:ff
```

- Delete the static entry for eth0 and IP address 1.2.3.4 from the OSA ARP cache.

```
# qetharp -d eth0 -i 1.2.3.4
```

qethconf - Configure qeth devices

Use the **qethconf** command to configure IP address takeover, virtual IP address (VIPA), and proxy ARP for layer3 qeth devices.

See Chapter 14, "qeth device driver for OSA-Express (QDIO) and HiperSockets," on page 217 for details about the following concepts:
- IP address takeover
- VIPA (virtual IP address)
- Proxy ARP

You cannot use this command with the layer2 option.

From the arguments that are specified, **qethconf** assembles the function command and redirects it to the corresponding sysfs attributes. You can also use **qethconf** to list the already defined entries.

qethconf syntax

```
►►──qethconf──┬─ ipa──┬─┬─┬─ add──┬── <ip_addr>/<mask_bits>──── <interface>──┬──────────►◄
              │       │ │ │ └ del─┘                                          │
              │       │ │ ├─ inv4──────────────────────────────────────────┤
              │       │ │ └ inv6─┘                                          │
              │       │ └─ list──────────────────────────────────────────────┤
              ├─ vipa─┬─┬─┬─ add──┬── <ip_addr>── <interface>──────────────┤
              │ └ parp─┘ │ │ └ del─┘                                          │
              │          │ └─ list──────────────────────────────────────────┤
              ├─ list_all──────────────────────────────────────────────────┤
              └─ list_msg──────────────────────────────────────────────────┘
```

The **qethconf** command has these function keywords:

ipa
: configures qeth for IP address takeover (IPA).

vipa
: configures qeth for virtual IP address (VIPA).

parp or rxip
: configures qeth for proxy ARP.

The **qethconf** command has these action keywords:

add
: adds an IP address or address range.

del
: deletes an IP address or address range.

inv4
: inverts the selection of address ranges for IPv4 address takeover. This inversion makes the list of IP addresses that was specified with `qethconf add` and `qethconf del` an exclusion list.

inv6
inverts the selection of address ranges for IPv6 address takeover. This inversion makes the list of IP addresses that was specified with `qethconf add` and `qethconf del` an exclusion list.

list
lists existing definitions for specified qeth function.

list_all
lists existing definitions for IPA, VIPA, and proxy ARP.

<ip_addr>
IP address. Can be specified in one of these formats:

- IP version 4 format, for example, `192.168.10.38`
- IP version 6 format, for example, `FE80::1:800:23e7:f5db`
- 8- or 32-character hexadecimals prefixed with `-x`, for example, `-xc0a80a26`

<mask_bits>
specifies the number of bits that are set in the network mask. Enables you to specify an address range.

Example: A *<mask_bits>* of 24 corresponds to a network mask of `255.255.255.0`.

<interface>
specifies the name of the interface that is associated with the specified address or address range.

list_msg
lists qethconf messages and explanations.

-v or --version
displays version information.

-h or --help
displays a short help text, then exits. To view the man page, enter **man qethconf**.

Examples

- List existing proxy ARP definitions:

```
# qethconf parp list
parp add 1.2.3.4 eth0
```

- Assume responsibility for packages that are destined for 1.2.3.5:

```
# qethconf parp add 1.2.3.5 eth0
qethconf: Added 1.2.3.5 to /sys/class/net/eth0/device/rxip/add4.
qethconf: Use "qethconf parp list" to check for the result
```

  Confirm the new proxy ARP definitions:

```
# qethconf parp list
parp add 1.2.3.4 eth0
parp add 1.2.3.5 eth0
```

- Configure eth0 for IP address takeover for all addresses that start with 192.168.10:

```
# qethconf ipa add 192.168.10.0/24 eth0
qethconf: Added 192.168.10.0/24 to /sys/class/net/eth0/device/ipa_takeover/add4.
qethconf: Use "qethconf ipa list" to check for the result
```

Display the new IP address takeover definitions:

```
# qethconf ipa list
ipa add 192.168.10.0/24 eth0
```

- Configure VIPA for eth1:

```
# qethconf vipa add 10.99.3.3 eth1
qethconf: Added 10.99.3.3 to /sys/class/net/eth1/device/vipa/add4.
qethconf: Use "qethconf vipa list" to check for the result
```

Display the new VIPA definitions:

```
# qethconf vipa list
vipa add 10.99.3.3 eth1
```

- List all existing IPA, VIPA, and proxy ARP definitions.

```
# qethconf list_all
parp add 1.2.3.4 eth0
parp add 1.2.3.5 eth0
ipa add 192.168.10.0/24 eth0
vipa add 10.99.3.3 eth1
```

qethqoat - Query OSA address table

Use the **qethqoat** command to query the OSA address table and display physical and logical device information.

qethqoat syntax

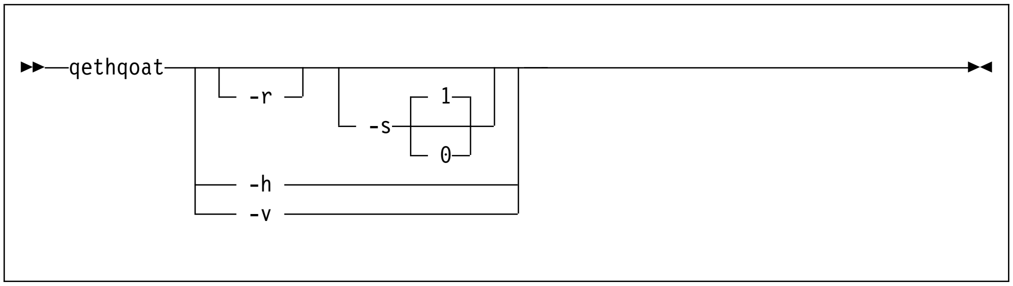

where:

`-r or --raw`
writes raw data to stdout.

`-s or --scope`
defines the scope of the query. The following values are valid:

0	queries the level of the OSA address table.
1	interface (this option is the default).

`-h or --help`
displays help information. To view the man page, enter **`man qethqoat`**.

`-v or --version`
displays version information.

Examples

To display physical and logical device information for interface enccw0.0.f400, issue:

```
# qethqoat enccw0.0.f400
PCHID: 0x0310
CHPID: 0xa9
Manufacturer MAC address: 6c:ae:8b:48:0b:68
Configured MAC address: 00:00:00:00:00:00
Data device sub-channel address: 0xf402
CULA: 0x00
Unit address: 0x02
Physical port number: 0
Number of output queues: 1
Number of input queues: 1
Number of active input queues: 0
CHPID Type: OSD
Interface flags: 0x0a000000
OSA Generation: OSA-Express5S
Port speed/mode: 10 Gb/s / full duplex
Port media type: single mode (LR/LX)
Jumbo frames: yes
Firmware: 0x00000c9a

IPv4 router: no
IPv6 router: no
IPv4 vmac router: no
IPv6 vmac router: no
Connection isolation: not active
Connection isolation VEPA: no
IPv4 assists enabled: 0x00111c77
IPv6 assists enabled: 0x00f15c60
IPv4 outbound checksum enabled: 0x0000003a
IPv6 outbound checksum enabled: 0x00000000
IPv4 inbound checksum enabled: 0x0000003a
IPv6 inbound checksum enabled: 0x00000000

IPv4 Multicast Address:                 MAC Address:
-----------------------                 ------------
224.0.0.1                               01:00:5e:00:00:01

IPv6 Address:                           IPA Flags:
-------------                           ----------
fe80::6cae:8b00:748:b68                 0x00000000

IPv6 Multicast Address:                 MAC Address:
-----------------------                 ------------
ff01::1                                 33:33:00:00:00:01
ff02::1                                 33:33:00:00:00:01
ff02::1:ff48:b68                        33:33:ff:48:0b:68
ff02::1:3                               33:33:00:01:00:03
```

This example uses scope 0 to query the supported OAT level and descriptor header types.

```
# qethqoat -s 0 enccw0.0.f400
Supported Scope mask: 0x00000001
Supported Descriptor hdr types: 0x0001070f
```

This example shows how the binary output from **qethqoat** can be processed in another tool. Here it is displayed in a hexdump viewer:

```
# qethqoat -r enccw0.0.f400 | hexdump
0000000 0158 0000 0008 0000 0000 0101 0000 0000
0000010 0000 0001 0000 0000 0000 0000 0000 0000
0000020 0004 0050 0001 0000 0000 0000 d7c8 4040
0000030 0120 0094 001a 643b 8a22 0000 0000 0000
0000040 e102 0002 0000 0004 0001 0000 0800 0000
0000050 0100 0480 0000 0766 0000 0000 0000 0000
0000060 0000 0000 0000 0000 0000 0000 0000 0000
0000070 0008 0060 0001 0000 0000 0000 d3c8 4040
0000080 0000 0000 0000 0000 0000 0000 0000 0000
0000090 0000 0000 0000 0000 0000 0000 0011 1c77
00000a0 0021 5c60 0000 001a 0000 0000 0000 001a
00000b0 0000 0000 0000 0000 0000 0000 0000 0000
00000c0 0002 0000 0000 0000 0000 0000 0000 0000
00000d0 0010 0030 0001 0000 0000 0000 c4c8 f4d4
00000e0 0000 0002 0000 0000 0000 0001 0000 0010
00000f0 0001 0001 0000 0000 0000 0000 0000 0000
0000100 e000 0001 0100 5e00 0001 0000 0000 0000
0000110 0010 0030 0001 0000 0000 0000 c4c8 f6d4
0000120 0000 0008 0000 0000 0000 0001 0000 0018
0000130 0001 0001 0000 0000 0000 0000 0000 0000
0000140 ff02 0000 0000 0000 0000 0000 0000 0001
0000150 3333 0000 0001 0000
0000158
```

scsi_logging_level - Set and get the SCSI logging level

Use the **scsi_logging_level** command to create, set, or get the SCSI logging level.

The SCSI logging feature is controlled by a 32-bit value – the SCSI logging level. This value is divided into 3-bit fields that describe the log level of a specific log area. Due to the 3-bit subdivision, setting levels or interpreting the meaning of current levels of the SCSI logging feature is not trivial. The scsi_logging_level script helps with both tasks.

scsi_logging_level syntax

```
                                  ┌──────────────────────────────┐
                                  ▼                              │
►►─scsi_logging_level──┬─────────────────────────────────────┬──┬─ -s ─┬──────────►◄
                       ├─ -a── <level>───────────────────────┤  │ -g │
                       ├─ -E── <level>───────────────────────┤  └ -c ┘
                       ├─ -T── <level>───────────────────────┤
                       ├─ -S── <level>───────────────────────┤
                       ├─ -M── <level>───────────────────────┤
                       ├─ --mlqueue── <level>────────────────┤
                       ├─ --mlcomplete── <level>─────────────┤
                       ├─ -L── <level>───────────────────────┤
                       ├─ --llqueue── <level>────────────────┤
                       ├─ --llcomplete── <level>─────────────┤
                       ├─ -H── <level>───────────────────────┤
                       ├─ --hlqueue── <level>────────────────┤
                       ├─ --hlcomplete── <level>─────────────┤
                       └─ -I── <level>───────────────────────┘
```

Where:

-a or --all ***<level>***
specifies value for all SCSI_LOG fields.

-E or --error ***<level>***
specifies SCSI_LOG_ERROR.

-T or --timeout ***<level>***
specifies SCSI_LOG_TIMEOUT.

-S or --scan ***<level>***
specifies SCSI_LOG_SCAN.

-M or --midlevel ***<level>***
specifies SCSI_LOG_MLQUEUE and SCSI_LOG_MLCOMPLETE.

--mlqueue ***<level>***
specifies SCSI_LOG_MLQUEUE.

--mlcomplete ***<level>***
specifies SCSI_LOG_MLCOMPLETE.

-L or --lowlevel ***<level>***
specifies SCSI_LOG_LLQUEUE and SCSI_LOG_LLCOMPLETE.

--llqueue ***<level>***
specifies SCSI_LOG_LLQUEUE.

--llcomplete <*level*>
specifies SCSI_LOG_LLCOMPLETE.

-H or --highlevel <*level*>
specifies SCSI_LOG_HLQUEUE and SCSI_LOG_HLCOMPLETE.

--hlqueue <*level*>
specifies SCSI_LOG_HLQUEUE.

--hlcomplete <*level*>
specifies SCSI_LOG_HLCOMPLETE.

-I or --ioctl <*level*>
specifies SCSI_LOG_IOCTL.

-s or --set
creates and sets the logging level as specified on the command line.

-g or --get
gets the current logging level.

-c or --create
creates the logging level as specified on the command line.

-v or --version
displays version information.

-h or --help
displays help text.

You can specify several SCSI_LOG fields by using several options. When multiple options specify the same SCSI_LOG field, the most specific option has precedence.

Examples

- This command prints the logging word of the SCSI logging feature and each logging level.

```
#> scsi_logging_level -g
Current scsi logging level:
dev.scsi.logging_level = 0
SCSI_LOG_ERROR=0
SCSI_LOG_TIMEOUT=0
SCSI_LOG_SCAN=0
SCSI_LOG_MLQUEUE=0
SCSI_LOG_MLCOMPLETE=0
SCSI_LOG_LLQUEUE=0
SCSI_LOG_LLCOMPLETE=0
SCSI_LOG_HLQUEUE=0
SCSI_LOG_HLCOMPLETE=0
SCSI_LOG_IOCTL=0
```

- This command sets all logging levels to 3:

```
#> scsi_logging_level -s -a 3
New scsi logging level:
dev.scsi.logging_level = 460175067
SCSI_LOG_ERROR=3
SCSI_LOG_TIMEOUT=3
SCSI_LOG_SCAN=3
SCSI_LOG_MLQUEUE=3
SCSI_LOG_MLCOMPLETE=3
SCSI_LOG_LLQUEUE=3
SCSI_LOG_LLCOMPLETE=3
SCSI_LOG_HLQUEUE=3
SCSI_LOG_HLCOMPLETE=3
SCSI_LOG_IOCTL=3
```

- This command sets SCSI_LOG_HLQUEUE=3, SCSI_LOG_HLCOMPLETE=2 and assigns all other SCSI_LOG fields the value 1.

```
# scsi_logging_level --hlqueue 3 --highlevel 2 --all 1 -s
New scsi logging level:
dev.scsi.logging_level = 174363209
SCSI_LOG_ERROR=1
SCSI_LOG_TIMEOUT=1
SCSI_LOG_SCAN=1
SCSI_LOG_MLQUEUE=1
SCSI_LOG_MLCOMPLETE=1
SCSI_LOG_LLQUEUE=1
SCSI_LOG_LLCOMPLETE=1
SCSI_LOG_HLQUEUE=3
SCSI_LOG_HLCOMPLETE=2
SCSI_LOG_IOCTL=1
```

sncap - Manage CPU capacity

Use the simple network CPU capacity management (**sncap**) command to specify a temporary capacity record activation or deactivation and operation parameters for a CPC. This command can control the Capacity BackUp (CBU), Capacity for Planned Events, and On/Off Capacity On-Demand (OOCOD) temporary capacity records.

For command return codes, see the man page.

The **sncap** command is included in the snipl package that is provided with SUSE Linux Enterprise Server 12 SP3.

Before you begin:

- **sncap** requires the Support Element (SE) and Hardware Management Console (HMC) software version 2.10.0 or later. The command can operate only with the records that are installed on the SE.
- **sncap** uses the management application programming interfaces (APIs) provided by the SE or HMC (HWMCAAPI API servers). For information about the management APIs of the SE and the HMC, see *System z Application Programming Interfaces*, SB10-7030, available from IBM Resource Link at `www.ibm.com/servers/resourcelink`.

  To communicate with the server, **sncap** establishes a network connection and uses the SNMP protocol to send and retrieve data by using HWMCAAPI API calls. The server must be configured to allow the initiating host system to access the API.

Note:

- A temporary capacity record activation or deactivation command might cancel due to a timeout. The timeout is indicated by return code 12 - "Timeout occurred, the command is canceled" or 18 - "An error was received from the HWMCAAPI API", with the short message about the timeout. If a timeout occurs, the requested operation can still continue to run on the CPC support element and potentially complete successfully. Use **-q** to investigate the state of the record before you issue the next command for that CPC.
- The **sncap** command processes cannot be run in parallel for the same CPC for temporary capacity record activation or deactivation. Also, a **sncap** process that is started for a temporary capacity record activation or deactivation cannot run in parallel with a **snipl** process for the same CPC.
- For CPCs with simultaneous multithreading, **sncap** acts on entire hardware cores, not at the level of individual threads.

sncap syntax

```
►►─sncap──┬─ <CPCID> ──┬─ -a  <RECID> ──┬──────┬──┬──────┬─┤ PROCINFO ├──┬──────────►
          │            │                │ -t   │  │ -n   │                │
          │            ├─ -d  <RECID> ──┘      │  │      │                │
          │            └─ -q  <RECID> ─────────┘  │      │                │
          │               ├─ -l ──────────────────┘      │                │
          │               └─ -c ──────────────────────────┘                │
          └─ -x ────────────────────────────────────────────────────────────┘

►──┬─────┬──┬──────────────┬──────────────────────────────────────────────►◄
   │ -V  │  │ access-data  │
   └─────┘  └──────────────┘
```

where:

<CPCID>
identifies the Central Processing Complex that is specified in the SE network settings configuration. This parameter also identifies the configuration file section where the server connection parameter can be specified (see `access-data`). Find the <*CPCID*> value either in the SE user interface in the Customize Network Settings window under the Identification tab, or by using **sncap** with the **-x** option. This parameter is mandatory for the activation, deactivation, and query operations. Specify it as a command-line argument.

<RECID>
identifies a temporary capacity record that is installed on the SE that you want to work with.

-a or --activate
activates the temporary capacity record with the record identifier <*RECID*> and processor parameters PROCINFO. The PROCINFO parameters must be specified for the record activation.

-t or --test
specifies the temporary capacity record activation in the test mode for up to 10 days. The test mode allows temporary record activation the number of times that are specified in the record definition. Real activation is possible only while no test is active. This option can be used only with the **-a** option.

-d or --deactivate
deactivates the temporary capacity record with the record identifier <*RECID*> and processor parameters PROCINFO on the CPC <*CPCID*>. If the PROCINFO data is specified, **-d** deactivates only the specified processors in the CPC configuration. If the PROCINFO parameters are not specified, **-d** deactivates the entire record.

-n or --no_record_changes
skips any actions that would change the records. This mode can be used for debugging purposes. When specified, **sncap** does not change the temporary capacity record state during the record activation or deactivation. It assumes that the activation or deactivation request is always successful. The querying functions run as in the regular mode.

-x or --list_cpcs
Sends the output of the list of CPCs that are defined on an SE or HMC to standard out. The list contains the CPC identifiers and its support element version numbers. When the **-x** option is specified, the **-S** specification of the server IP address or DNS name is required as part of the access data.

-q or --query
displays detailed information about the temporary capacity record <*RECID*>, installed on the specified CPC. The information includes the data for the available CPU capacity models that are defined in the record and the current CPC processor capacity parameters.

- If the temporary capacity record activation parameters have a value of **-1**, the parameter value is unlimited.
- The negative value of PU or CLI in the Available Model Capacity Identifiers table designates the number of PU or CLI to be deactivated to achieve the listed model capacity.
- If the maximum quantity of CP type PUs shows an asterisk (*), all the PUs defined in the temporary capacity record can be activated as the CP type PUs.

-l or --list_records
displays the list of temporary capacity records that are installed on the specified CPC. A value of **-1** in the Real Act. and Test Act. report fields means that there is an unlimited number of available record activation attempts.

-c or --pu_configuration
displays the information about the current CPC processing unit configuration, including the number of active processors, the processors available for temporary activation, model capacity identifier, and current MSUs available on the CPC. A minus sign (-) in the report fields means that the value is not applicable for temporary or permanent configuration.

-V or --verbose
displays information useful for debugging.

-v or --version
displays the version number of **sncap**, then exits.

-h or --help
displays a short usage description and exits. To view the man page, issue **man sncap**.

PROCINFO:

```
├──┬─────────────────────┬──┬─────────────────────┬──┬─────────────────────┬──────────────────────────────►
   └─ -zaap <number>─────┘  └─ -ziip <number>─────┘  └─ -icf <number>──────┘

►──┬─────────────────────┬──┬─────────────────────┬──┬─────────────────────┬──┤
   └─ -ifl <number>──────┘  └─ -sap <number>──────┘  └─ -m <ID>────────────┘
```

Specifies the processor types and quantities to be activated or deactivated on the CPC <*CPCID*> to change the record activation level. The temporary capacity record activation operation requires the PROCINFO parameters. The PROCINFO parameters can be omitted for the record deactivation. If no specific processor type is specified, all the processors from the temporary capacity record are deactivated in the CPC. The model capacity identifier is set to the minimal available model capacity value. Each processor type can be specified only once. If more processors are specified for activation or deactivation than are defined in the record, the command returns with return code 17. No processors are activated or deactivated.

--zaap <number>
specifies the number of zAAP processors to be activated or deactivated.

--ziip <number>
specifies the number of zIIP processors to be activated or deactivated.

--icf <number>
specifies the number of ICF processors to be activated or deactivated.

--ifl <number>
specifies the number of IFL processors to be activated or deactivated.

--sap <number>
specifies the number of SAP processors in the PROCINFO parameters to be activated or deactivated.

-m or --model-capacity <*ID*>
specifies the model capacity identifier <*ID*> to be activated by the command. The model capacity identifiers are supplied in the temporary capacity record. They can be found either by using the support element user interface, or the `--query <RECID>` option of the **sncap** application. Use the model capacity identifier to control the number of CP processors and the Capacity Level Indicator value to be activated or deactivated to achieve the target CPU capacity model. Also, the model capacity identifier influenced the Target MSU Value and MSU Cost parameters. If the `-m` option is specified without the processor types and quantities, it activates or deactivates only the specified capacity model. It then leaves the active auxiliary processor quantities unchanged.

access-data:

```
├── -S <ip_address>──┬─ -p <password>─┬─┬─ -u <username>──────────────────►
                     └─ -P────────────┘ └─ -e──────────────┘

  ┌─ -f ~/.snipl.conf─┐  ┌─ --timeout 60000─┐
►─┤                   ├──┤                  ├──────────────────────────────┤
  └─ -f <filename>────┘  └─ --timeout <ms>──┘
```

-S or --se <*ip_address*>
Specifies the IP address or DNS name for the SE or HMC that controls the CPC you want to work with. You can omit this parameter if the SE or HMC IP address or DNS name and community are specified in the sncap configuration file. The IP address of SE or HMC is identified in the configuration file with the cpcid attribute.

-p or --password <*password*>
Specifies the password (community) from the SNMP configuration settings on the SE or HMC that controls the CPC you want to work with. This parameter is required. It must be specified either in the command line or in the configuration file. Alternatively, use the `-P` option to prompt the user for the password.

The password depends on whether the connection is encrypted:

- When encryption is disabled, the password specifies the password (community) from the SNMP configuration settings on the SE or HMC that controls the CPC you want to work with.
- When encryption is enabled, the password parameter specifies the password for the SNMPv3 username from the `-u` command line parameter or user keyword value in the sncap configuration file.

-P or --promptpassword
Prompts for a password (community) in protected entry mode.

-u <*username*> or --userid <*username*>
Specifies the user name from the SNMP configuration settings of an SE or HMC that controls the CPC you want to work with. This parameter is required if encryption is active, and can be specified on the command line or in the sncap configuration file.

-e or --noencryption
Disables SE or HMC connection encryption. By default, connection encryption is enabled. A user name is not allowed if encryption is disabled.

-f or --configfilename <*filename*>
Specifies the name of the sncap configuration file that maps CPC identifiers to the corresponding specifications for the SE or HMC addresses and passwords. If no configuration file is specified, the user-specific default file `~/.snipl.conf` is used. If this file does not exist, the system default file `/etc/snipl.conf` is used. A connection to server requires specification of the CPC ID, the SE or HMC IP address or DNS name, and the password (community). If only the <*CPCID*> parameter is specified on the command line, it identifies the section of the configuration file that contains the credentials values. If the CPC ID and the server IP address are specified, **sncap** looks for the password in the configuration file using the server IP address for the configuration file section identification. If your specification maps to multiple sections, the first match is processed. If conflicting specifications of credentials are provided through the command line and the configuration file, the command-line specification is used. If no configuration file is specified or available at the default locations, all required parameters must be specified on the command line.

--timeout <*ms*>
Specifies the timeout in milliseconds for general management API calls. The default is 60000 ms.

Configuration file structure

Any required connection parameters that are not provided on the command line must be specified through the configuration file. The command-line specifications override specifications in the configuration file. The **sncap** command uses the CPC identifier to select the configuration file sections to retrieve the relevant connection parameters. You must specify the CPC identifier on the command line for all sncap operations except the `-x` option. The `-x` option is used to retrieve the CPC identifier list that is defined on a server.

The structure of the sncap configuration file is similar to the snipl configuration file structure. You can use the snipl configuration file with sncap if you add the CPC identifiers to the snipl server definition sections by using the cpcid keyword. The cpcid keywords can be added only to the support element HWMCAAPI API server definitions (LPAR type sections). They cannot be added to the configuration file sections of the VM type. VM type sections define connections to z/VM systems in the snipl configuration file and sncap can connect only to SEs or HMCs.

An sncap configuration file contains one or more sections. Each section consists of multiple lines with specifications of the form `<keyword>=<value>` for an SE or HMC. The **sncap** command identifies the sections by using the CPC identifier. To retrieve the connection parameters from the configuration file, at least the CPC identifier must be specified on the command line. If both the server IP address (or DNS name) and the CPC identifier are specified on the command line, the password is selected in the configuration file by using the server IP address (or DNS name). When you use the `-x` command-line option to get the list of defined CPCs on a server, specify only the server IP address (or DNS name) on the command line.

The following rules apply to the configuration file:

- Lines that begin with a number sign (#) are comment lines.
- A number sign in the middle of a line makes the remaining line a comment.
- Empty lines are allowed.
- The specifications are not case-sensitive.
- In a *<keyword>=<value>* pair, one or more blanks are allowed before or after the equal sign (=).

The following list maps the configuration file keywords to command line equivalents:

server (required, once per section) starts a configuration file section by specifying the IP address or DNS name of an SE or HMC. This attribute is equivalent to the `--se` command-line argument.

user (optional, at most once per section) specifies the username from the SNMP settings of the HMC or SE. When omitted, you must specify the user name in the sncap command line arguments. The user parameter applies to encrypted connections only, and is not allowed for unencrypted connections.

password
(optional, at most once per section) specifies the password (community) from the SNMP settings of the SE or HMC. If omitted, you must specify the password in the **sncap** command-line arguments. Alternatively, use `-P` option to prompt the user for the password. This attribute specifies the `--password` command-line argument.

encryption
(optional, at most once per section) specifies whether the server connection is encrypted. Valid values are: yes or no. If not specified, encryption is enabled by default. Specifying "encryption = no" is equivalent to the `-e` command-line argument.

cpcid (required, at least once per section) specifies the Central Processing Complex name that is defined in the hardware. This server attribute is used to map the CPC identifier to the server IP address (DNS name) and password. There can be more than one cpcid entry in a section if the server is an HMC.

type (optional, at most once per section) specifies the server type. This parameter is used to provide compatibility with the snipl configuration file. If it is specified, it must have the value "LPAR".

Sample configuration file

```
-----------------------------------------------------
# Comment line (ignored).
#
# A section that defines a support element connection.
#
Server = 192.0.2.4
type = LPAR
encryption = yes
user = hugo
cpcid = SZ01CP00
password = pw42play
#
# A section that defines a hardware management console
# connection.
#
Server = 192.0.2.2
type = LPAR
encryption = no
cpcid = SZ02CP00
cpcid = SZ02CP01
cpcid = SZ02CP03
cpcid = SZ02CP04
password= pw42play
<EOF>
-------------------------------------------------------
```

Examples

- To activate a CBU temporary capacity record CB7KHB38 on CPC SCZP201 to temporarily upgrade it to model capacity identifier 741:

  ```
  sncap SCZP201 -S 192.0.2.4 -e -P -a CB7KHB38 -m 741
  ```

- To activate only a subset of processors defined in temporary capacity record CB7KHB38 on the CPC SCZP201:

  ```
  sncap SCZP201 -S 192.0.2.4 -e -P -a CB7KHB38 --zaap 2 --ziip 2
  ```

- To deactivate a CBU temporary capacity record CB7KH38 on the CPC SCZP201:

  ```
  sncap SCZP201 -S 192.0.2.4 -e -P -d CB7KHB38
  ```

- To deactivate only a subset of processors defined in temporary capacity record CB7KHB38 on the CPC SCZP201:

  ```
  sncap SCZP201 -S 192.0.2.4 -e -P -d CB7KHB38 --zaap 2 --ziip 2
  ```

  With a suitable configuration file at `/etc/xcfg` the previous command can be shortened to:

  ```
  sncap SCZP201 -f /etc/xcfg -d CB7KHB38 --zaap 2 --ziip 2
  ```

  With a suitable default configuration file the command can be further shortened to:

  ```
  sncap SCZP201 -d CB7KHB38 --zaap 2 --ziip 2
  ```

For information about the **sncap** report fields and sample workflows for the temporary capacity record installation, activation and deactivation, see the Redbooks publication *z Systems Capacity on Demand User's Guide*, SC28-6943 or any updates of this publication that applies to your mainframe system.

tape390_crypt - Manage tape encryption

Use the **tape390_crypt** command to enable and disable tape encryption for a channel attached tape device. You can also specify key encrypting keys (KEK) by using labels or hashes.

For 3592 tape devices, it is possible to write data in an encrypted format. The encryption keys are stored on an encryption key manager (EKM) server, which can run on any machine with TCP/IP and Java support. The EKM communicates with the tape drive over the tape control unit by using TCP/IP. The control unit acts as a proxy and forwards the traffic between the tape drive and the EKM. This type of setup is called out-of-band control-unit based encryption.

The EKM creates a data key that encrypts data. The data key itself is encrypted with KEKs and is stored in so called external encrypted data keys (EEDKs) on the tape medium.

You can store up to two EEDKs on the tape medium. With two EEDKs, one can contain a locally available KEK and the other can contain the public KEK of the location or company to where the tape is to be transferred. Then, the tape medium can be read in both locations.

When the tape device is mounted, the tape drive sends the EEDKs to the EKM. The EKM tries to unwrap one of the two EEDKs and sends back the extracted data key to the tape drive.

Linux can address KEKs by specifying either hashes or labels. Hashes and labels are stored in the EEDKs.

Note: If a tape is encrypted, it cannot be used for IPL.

Before you begin:

To use tape encryption, you need:

- A 3592 crypto-enabled tape device and control unit that is configured as system-managed encryption.
- A crypto-enabled 3590 channel-attached tape device driver. See Chapter 12, “Channel-attached tape device driver,” on page 199.
- A key manager. See *Encryption Key Manager Component for the Java(TM) Platform Introduction, Planning, and User’s Guide*, GA76-0418 for more information.

tape390_crypt syntax

```
►►─tape390_crypt──┬─ -q ──────────┬─ <node> ──────────────────────►◄
                  │               │
                  ├─ -e ─┬─ on ───┤
                  │      └─ off ──┤
                  │               │
                  └─┤ Keys ├──────┘
```

Keys:

```
  (1)
├──────────┬──────────────────────────────────────────────────────┤
           │ -k <value> ┬─<char>label─┬─┬─ -d : ──────┬──────────┬─
           │            └─<char>hash──┘ │             │          │
           └────────────────────────────┘ └─ -d <char>─┘ └─ -f ─┘
```

Notes:

1 The `-k` or `--key` operand can be specified maximally twice.

Where:

`-q or --query`
displays information about the tape's encryption status. If encryption is active and the medium is encrypted, additional information about the encryption keys is displayed.

`-e or --encryption`
sets tape encryption on or off.

`-k or --key`
sets tape encryption keys. You can specify the `-k` option only if the tape medium is loaded and rewound. While processing the `-k` option, the tape medium is initialized and all previous data contained on the tape medium is lost.

You can specify the `-k` option twice, because the tape medium can store two EEDKs. If you specify the `-k` option once, two identical EEDKs are stored.

<value>
specifies the key encrypting key (KEK), which can be up to 64 characters long. The keywords **label** or **hash** specify how the KEK in *<value>* is to be stored on the tape medium. The default store type is **label**.

`-d or --delimiter`
specifies the character that separates the KEK in *<value>* from the store type (**label** or **hash**). The default delimiter is “:” (colon).

<char>
is a character that separates the KEK in *<value>* from the store type (**label** or **hash**).

`-f or --force`
specifies that no prompt message is to be issued before writing the KEK information and initializing the tape medium.

<node>
specifies the device node of the tape device.

-v or --version
displays information about the version.

-h or --help
displays help text. For more information, enter the command **man tape390_crypt**.

Examples

The following scenarios illustrate the most common use of tape encryption. In all examples /dev/ntibm0 is used as the tape device.

Querying a tape device before and after encryption is turned on

This example shows a query of tape device /dev/ntibm0. Initially, encryption for this device is off. Encryption is then turned on, and the status is queried again.

```
tape390_crypt -q /dev/ntibm0
ENCRYPTION: OFF
MEDIUM: NOT ENCRYPTED

tape390_crypt -e on /dev/ntibm0

tape390_crypt -q /dev/ntibm0
ENCRYPTION: ON
MEDIUM: NOT ENCRYPTED
```

Then, two keys are set, one in label format and one in hash format. The status is queried and there is now additional output for the keys.

```
tape390_crypt -k my_first_key:label -k my_second_key:hash /dev/ntibm0
--->> ATTENTION! <<---
All data on tape /dev/ntibm0 will be lost.
Type "yes" to continue: yes
SUCCESS: key information set.

tape390_crypt -q /dev/ntibm0
ENCRYPTION: ON
MEDIUM: ENCRYPTED
KEY1:
 value:  my_first_key
 type:  label
 ontape:  label
KEY2:
 value:  my_second_key
 type:  label
 ontape:  hash
```

Using default keys for encryption

1. Load the cartridge. If the cartridge is already loaded:
   - Switch off encryption:
     tape390_crypt -e off /dev/ntibm0
   - Rewind:
     mt -f /dev/ntibm0 rewind
2. Switch encryption on:
   tape390_crypt -e on /dev/ntibm0
3. Write data.

Using specific keys for encryption

1. Load the cartridge. If the cartridge is already loaded, rewind:
   ```
   mt -f /dev/ntibm0 rewind
   ```
2. Switch encryption on:
   ```
   tape390_crypt -e on /dev/ntibm0
   ```
3. Set new keys:
   ```
   tape390_crpyt -k key1 -k key2 /dev/ntibm0
   ```
4. Write data.

Writing unencrypted data

1. Load the cartridge. If the cartridge is already loaded, rewind:
   ```
   mt -f /dev/ntibm0 rewind
   ```
2. If encryption is on, switch off encryption:
   ```
   tape390_crypt -e off /dev/ntibm0
   ```
3. Write data.

Appending new files to an encrypted cartridge

1. Load the cartridge
2. Switch encryption on:
   ```
   tape390_crypt -e on /dev/ntibm0
   ```
3. Position the tape.
4. Write data.

Reading an encrypted tape

1. Load the cartridge
2. Switch encryption on:
   ```
   tape390_crypt -e on /dev/ntibm0
   ```
3. Read data.

tape390_display - display messages on tape devices and load tapes

Use the **tape390_display** command to show messages on the display unit of a physical tape device, optionally in conjunction with loading a tape.

tape390_display syntax

```
►►─tape390_display──┬──────┬──┬──────┬──────────────────────────────────────►
                    └─ -l ─┘  └─ -q ─┘

    ┌─ -t standard──────┐
►───┼────────────────────┼──┬──────┬──────────── <message1> ──┬──────────── <node> ──────────►◄
   │└─ -t──┬─ load──────┘  │└─ -b ─┘                          │
   │       ├─ unload────┘  └─ <message1>── <message2> ─┘
   │       └─ noop──────┘                                     │
   └─ -t── reload── <message1>── <message2> ──────────────────┘
```

Where:

-l or --load
instructs the tape unit to load the next indexed tape from the automatic tape loader (if installed). Ignored if no loader is installed or if the loader is not in "system" mode. The loader "system" mode allows the operating system to handle tape loads.

-t or --type
The possible values have the following meanings:

standard
displays the message or messages until the physical tape device processes the next tape movement command.

load displays the message or messages until a tape is loaded; if a tape is already loaded, the message is ignored.

unload
displays the message or messages while a tape is loaded; if no tape is loaded, the message is ignored.

reload displays the first message while a tape is loaded and the second message when the tape is removed. If no tape is loaded, the first message is ignored and the second message is displayed immediately. The second message is displayed until the next tape is loaded.

noop is intended for test purposes only. It accesses the tape device but does not display the message or messages.

-b or --blink
causes *<message1>* to be displayed repeatedly for 2 seconds with a half-second pause in between.

<message1>
is the first or only message to be displayed. The message can be up to 8 byte.

<message2>
is a second message to be displayed alternately with the first, at 2-second intervals. The message can be up to 8 byte.

<node>
is a device node of the target tape device.

-q or --quiet
suppresses all error messages.

-v or --version
displays information about the version.

-h or --help
displays help text. For more information, enter the command **man tape390_display**.

Note:

1. Symbols that can be displayed include:

   Alphabetic characters:
   A through Z (uppercase only) and spaces. Lowercase letters are converted to uppercase.

   Numeric characters:
   0 1 2 3 4 5 6 7 8 9

   Special characters:
   @ $ # , . / ' ( ) * & + - = % : _ < > ? ;

   The following are included in the 3490 hardware reference but might not display on all devices: | ¢
2. If only one message is defined, it remains displayed until the tape device driver next starts to move or the message is updated.
3. If the messages contain spaces or shell-sensitive characters, they must be enclosed in quotation marks.

Examples

The following examples assume that you are using standard devices nodes and not device nodes that are created by udev:

- Alternately display “BACKUP” and “COMPLETE” at 2-second intervals until device /dev/ntibm0 processes the next tape movement command:

  ```
  tape390_display BACKUP COMPLETE /dev/ntibm0
  ```
- Display the message “REM TAPE” while a tape is in the physical tape device followed by the message“NEW TAPE” until a new tape is loaded:

  ```
  tape390_display --type reload "REM TAPE" "NEW TAPE" /dev/ntibm0
  ```
- Attempts to unload the tape and load a new tape automatically, the messages are the same as in the previous example:

  ```
  tape390_display -l -t reload "REM TAPE" "NEW TAPE" /dev/ntibm0
  ```

tunedasd - Adjust low-level DASD settings

Use the **tunedasd** command to adjust performance relevant settings and other low-level DASD device settings.

In particular, you can perform these tasks:

- Query and set a DASD's cache mode
- Display and reset DASD performance statistics

  Tip: Use the **dasdstat** command to display performance statistics. This command includes and extends the statistics that are available through the **tunedasd** command.
- Reserve and release DASD
- Break the lock of an online DASD (to learn how to access a boxed DASD that is not yet online, see "Accessing DASD by force" on page 129)

Before you begin: For the performance statistics, data gathering must be turned on by writing "on" to `/proc/dasd/statistics`.

tunedasd syntax

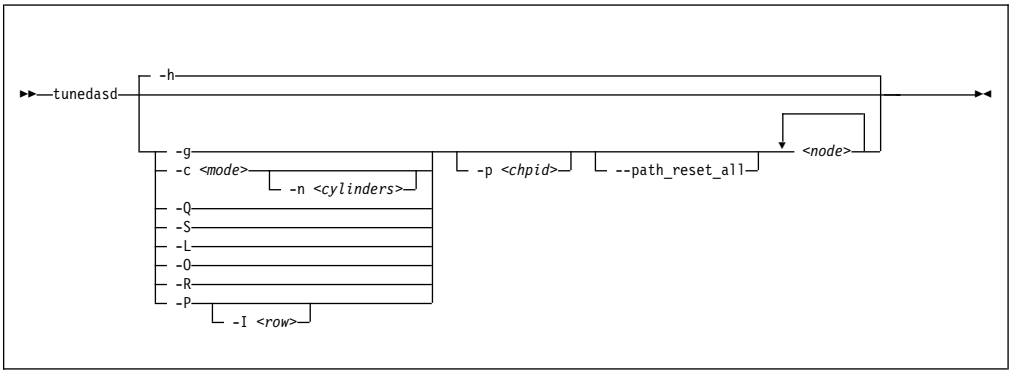

Where:

<node>
specifies a device node for the DASD to which the command is to be applied.

-g or --get_cache
gets the current caching mode of the storage controller. This option applies to ECKD only.

-c *<mode>* or --cache *<mode>*
sets the caching mode on the storage controller to *<mode>*. This option applies to ECKD only.

Today's ECKD devices support the following behaviors:

normal
for normal cache replacement.

bypass
to bypass cache.

inhibit
to inhibit cache.

sequential
for sequential access.

prestage
for sequential prestage.
record for record access.

For details, see *IBM TotalStorage Enterprise Storage Server® System/390® Command Reference 2105 Models E10, E20, F10, and F20*, SC26-7295.

-n <*cylinders*> or --no_cyl <*cylinders*>
specifies the number of cylinders to be cached. This option applies to ECKD only.

-Q or --query_reserve
queries the reserve status of the device. The status can be:
none the device is not reserved.
implicit
the device is not reserved, but there is a contingent or implicit allegiance to this Linux instance.
other the device is reserved to another operating system instance.
reserved
the device is reserved to this Linux instance.

For details, see the *Storage Control Reference* of the attached storage server.

This option applies to ECKD only.

-S or --reserve
reserves the device. This option applies to ECKD only.

-L or --release
releases the device. This option applies to ECKD only.

-O or --slock
reserves the device unconditionally. This option applies to ECKD only.

Note: This option is to be used with care as it breaks any existing reserve by another operating system.

-R or --reset_prof
resets the profile information of the device.

-P or --profile
displays a usage profile of the device.

-I <*row*> or --prof_item <*row*>
prints the usage profile item that is specified by <*row*>. <*row*> can be one of:
reqs number of DASD I/O requests.
sects number of 512-byte sectors.
sizes histogram of sizes.
total histogram of I/O times.
totsect histogram of I/O times per sector.
start histogram of I/O time until ssch.
irq histogram of I/O time between ssch and irq.
irqsect
histogram of I/O time between ssch and irq per sector.
end histogram of I/O time between irq and end.
queue number of requests in the DASD internal request queue at enqueueing.

-p or --path_reset <*chpid*>
resets a channel path <*chpid*> of a selected device. A channel path might be suspended due to high IFCC error rates or a High Performance FICON failure. Use this option to resume considering the channel path for I/O.

--path_reset_all
resets all channel paths of a selected device. The channel paths might be suspended due to high IFCC error rates or a High Performance FICON failure. Use this option to resume considering all defined channel paths for I/O.

-v or --version
displays version information.

-h or --help
displays help text. For more information, enter the command **man tunedasd**.

Examples

- The following sequence of commands first checks the reservation status of a DASD and then reserves it:

```
# tunedasd -Q /dev/dasdzzz
none
# tunedasd -S /dev/dasdzzz
Reserving device </dev/dasdzzz>...
Done.
# tunedasd -Q /dev/dasdzzz
reserved
```

- This example first queries the current setting for the cache mode of a DASD with device node `/dev/dasdzzz` and then sets it to one cylinder “prestage”.

```
# tunedasd -g /dev/dasdzzz
normal (0 cyl)
# tunedasd -c prestage -n 2 /dev/dasdzzz
Setting cache mode for device </devdasdzzz>...
Done.
# tunedasd -g /dev/dasdzzz
prestage (2 cyl)
```

- In this example two device nodes are specified. The output is printed for each node in the order in which the nodes where specified.

```
# tunedasd -g /dev/dasdzzz /dev/dasdzzy
prestage (2 cyl)
normal (0 cyl)
```

- The following command prints the usage profile of a DASD.

```
# tunedasd -P /dev/dasdzzz

19617 dasd I/O requests
with 4841336 sectors(512B each)

   __<4     ___8     __16     __32     __64    _128    _256    _512     __1k     __2k     __4k     __8k    _16k    _32k    _64k    128k
   _256    _512     __1M     __2M     __4M     __8M    _16M    _32M    _64M    128M    256M    512M     __1G     __2G     __4G    _>4G
Histogram of sizes (512B secs)
      0       0     441      77      78      87     188   18746       0       0       0       0       0       0       0       0
      0       0       0       0       0       0       0       0       0       0       0       0       0       0       0       0
Histogram of I/O times (microseconds)
      0       0       0       0       0       0       0       0     235     150     297   18683     241       3       4       4
      0       0       0       0       0       0       0       0       0       0       0       0       0       0       0       0
Histogram of I/O times per sector
      0       0       0   18736     333     278      94      78      97       1       0       0       0       0       0       0
      0       0       0       0       0       0       0       0       0       0       0       0       0       0       0       0
Histogram of I/O time till ssch
  19234      40      32       0       2       0       0       3      40      53     128      85       0       0       0       0
      0       0       0       0       0       0       0       0       0       0       0       0       0       0       0       0
Histogram of I/O time between ssch and irq
      0       0       0       0       0       0       0       0     387     208     250   18538     223       3       4       4
      0       0       0       0       0       0       0       0       0       0       0       0       0       0       0       0
Histogram of I/O time between ssch and irq per sector
      0       0       0   18803     326     398      70      19       1       0       0       0       0       0       0       0
      0       0       0       0       0       0       0       0       0       0       0       0       0       0       0       0
Histogram of I/O time between irq and end
  18520     735     246      68      43       4       1       0       0       0       0       0       0       0       0       0
      0       0       0       0       0       0       0       0       0       0       0       0       0       0       0       0
# of req in chanq at enqueuing (1..32)
      0   19308     123      30      25     130       0       0       0       0       0       0       0       0       0       0
      0       0       0       0       0       0       0       0       0       0       0       0       0       0       0       0
```

- The following command prints a row of the usage profile of a DASD. The output is on a single line as indicated by the (cont...) (... cont) in the illustration:

```
# tunedasd -P -I irq /dev/dasdzzz
         0|         0|         0|         0|         0|         0|         0|         0|       503|       271|(cont...)
 (... cont)       267|     18544|       224|         3|         4|         4|         0|         0|         0|(cont...)
 (... cont)         0|         0|         0|         0|         0|         0|         0|         0|         0|(cont...)
 (... cont)         0|         0|         0|         0|
```

- The following command resets a failed channel path with CHPID 45:

```
# tunedasd -p 45 /dev/dasdc
```

vmcp - Send CP commands to the z/VM hypervisor

Use the **vmcp** command to send control program (CP) commands to the z/VM hypervisor and display the response from z/VM.

The **vmcp** command expects the command line as a parameter and returns the response to stdout. Error messages are written to stderr.

You can issue **vmcp** commands using the `/dev/vmcp` device node (see Chapter 38, "z/VM CP interface device driver," on page 425) or from a command prompt in a terminal session.

vmcp syntax

```
►►─vmcp─┬─ -h ──────────────────────────────────────────────────►◄
        ├─ -v ──────────────────────────────────────────────────
        │                 ┌─ 8 KB─┐
        └─┬─────────────┬─┴───────┴─── <command>─┘
          └─ -k─┘       └─ -b──┘
```

Where:

-k or --keepcase
preserves the case of the characters in the specified command string. By default, the command string is converted to uppercase characters.

-b <*size*> or --buffer <*size*>
specifies the buffer size in bytes for the response from z/VM CP. Valid values are from 4096 (or 4k) up to 1048756 (or 1M). By default, **vmcp** allocates an 8192 byte (8k) buffer. You can use k and M to specify kilo- and megabytes.

<command>
specifies the command that you want to send to CP.

-v or --version
displays version information.

-h or --help
displays help text. For more information, enter the command **man vmcp**.

If the command completes successfully, **vmcp** returns 0. Otherwise, **vmcp** returns one of the following values:

1. CP returned a non-zero response code.
2. The specified buffer was not large enough to hold CP's response. The command was run, but the response was truncated. You can use the `--buffer` option to increase the response buffer.
3. Linux reported an error to **vmcp**. See the error message for details.
4. The options that are passed to **vmcp** were erroneous. See the error messages for details.

Examples

- To get your user ID issue:

```
# vmcp query userid
```

- To attach the device 1234 to your guest, issue:

```
# vmcp attach 1234 \*
```

- If you add the following line to `/etc/sudoers`:

```
ALL ALL=NOPASSWD:/sbin/vmcp indicate
```

  every user on the system can run the **`indicate`** command by using:

```
# sudo vmcp indicate
```

- If you need a larger response buffer, use the `--buffer` option:

```
# vmcp --buffer=128k q 1-ffff
```

vmur - Work with z/VM spool file queues

Use the **vmur** command to work with z/VM spool file queues.

The **vmur** command provides these main functions:

Receive
Read data from the z/VM reader file queue. The command performs the following steps:
- Places the reader queue file to be received at the top of the queue.
- Changes the reader queue file attribute to NOHOLD.
- Closes the z/VM reader after the file is received.

The **vmur** command detects z/VM reader queue files in:
- VMDUMP format as created by CP VMDUMP.
- NETDATA format as created by CMS SENDFILE or TSO XMIT.

Punch or print
Write data to the z/VM punch or printer file queue and transfer it to another user's virtual reader, optionally on a remote z/VM node. The data is sliced up into 80-byte or 132-byte chunks (called *records*) and written to the punch or printer device. If the data length is not an integer multiple of 80 or 132, the last record is padded.

List Display detailed information about one or all files on the specified spool file queue.

Purge Remove one or all files on a spool file queue.

Order Position a file at the top of a spool file queue.

Before you begin: To use the receive, punch, and print functions, the vmur device driver must be loaded and the corresponding unit record devices must be set online.

Serialization

The **vmur** command provides strict serialization of all its functions other than list, which does not affect a file queue's contents or sequence. Thus concurrent access to spool file queues is blocked to prevent unpredictable results or destructive conflicts.

For example, this serialization prevents a process from issuing **vmur purge -f** while another process is running **vmur receive 1234**. However, **vmur** is not serialized against concurrent CP commands that are issued through **vmcp**: if one process is running **vmur receive 1234** and another process issues **vmcp purge rdr 1234**, then the received file might be incomplete. To avoid such unwanted effects, always use **vmur** to work with z/VM spool file queues.

Spooling options

With the **vmur** command, you can temporarily override the z/VM settings for the CLASS, DEST, FORM, and DIST spooling options for virtual unit record devices. The **vmur** command restores the original settings before it returns control.

For details about the spooling options, see the z/VM product information. In particular, see the sections about the z/VM CP SPOOL, QUERY VIRTUAL RDR, QUERY VIRTUAL PUN, and QUERY VIRTUAL PRT commands in *z/VM CP*

Commands and Utilities Reference, SC24-6175.

vmur syntax

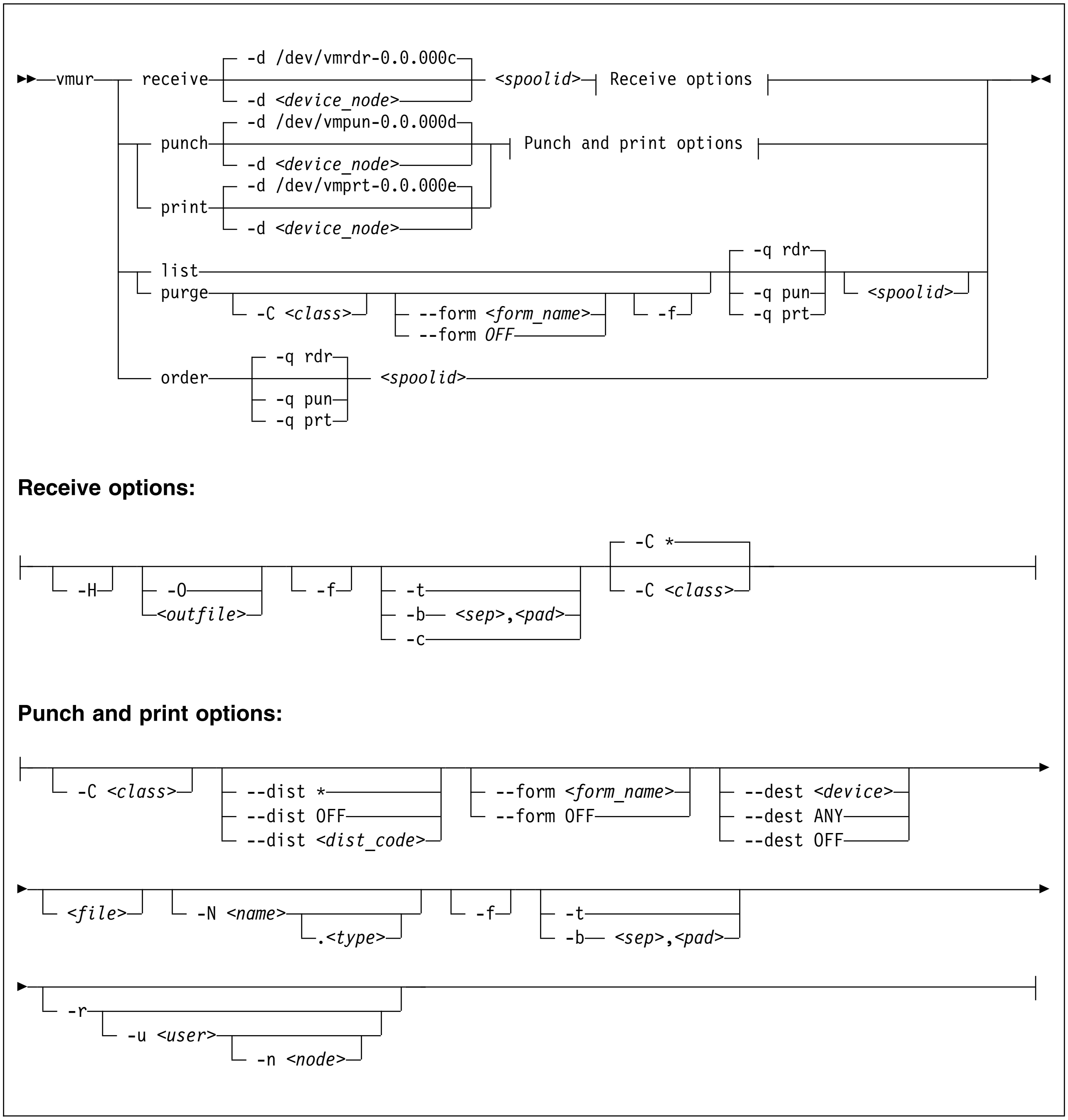

Where these are the main command options:

re or receive
receives a file from the z/VM reader queue.

pun or punch
writes to the z/VM punch queue.

pr or print
writes to the z/VM printer queue.

li or list
lists information about one or all files on a z/VM spool file queue.

pur or purge
purges one or all files from a z/VM spool file queue.

or or order
places a file on a z/VM spool file queue at the top of the queue.

Note: The short forms that are given for receive, punch, print, list, purge, and order are the shortest possible abbreviations. In keeping with z/VM style, you can abbreviate commands by dropping any number of letters from the end of the full keywords until you reach the short form. For example, **vmur re**, **vmur rec**, or **vmur rece** are all equivalent.

The remaining specifications are listed alphabetically by switch. Variable specifications that do not require a switch are listed first.

<file>
specifies a file, in the Linux file system, with data to be punched or printed. If this specification is omitted, the data is read from standard input.

<outfile>
specifies a file, in the Linux file system, to receive data from the reader spool file. If neither a file name nor **--stdout** are specified, the name and type of the spool file to be received (see the NAME and TYPE columns in **vmur list** output) are used to build an output file name of the form *<name>.<type>*. If the spool file to be received is an unnamed file, an error message is issued.

Use the `--force` option to overwrite existing files without a confirmation prompt.

<spoolid>
specifies the spool ID of a file on the z/VM reader, punch, or printer queue. Spool IDs are decimal numbers in the range 0-9999.

For the list or purge function: omitting the spool ID lists or purges all files in the queue.

-b *<sep>,<pad>* or --blocked *<sep>,<pad>*
receives or writes a file in blocked mode, where *<sep>* specifies the separator and *<pad>* specifies the padding character in hexadecimal notation. Example:
<sep>

```
--blocked 0xSS,0xPP
```

Use this option to use character sets other than IBM037 and ISO-8859-1 for conversion.

- For the receive function: All trailing padding characters are removed from the end of each record that is read from the virtual reader and the separator character is inserted afterward. The receive function's output can be piped to **iconv** by using the appropriate character sets. Example:

```
# vmur rec 7 -b 0x25,0x40 -O | iconv -f EBCDIC-US -t ISO-8859-1 > myfile
```

- For the punch or print function: The separator is used to identify the line end character of the file to punch or print. If a line has fewer characters than the record length of the used unit record device, the residual of the record is filled up with the specified padding byte. If a line exceeds the record size, an error is printed. Example:

```
# iconv test.txt -f ISO-8859-1 -t EBCDIC-US | vmur pun -b 0x25,0x40 -N test
```

-c or --convert
converts a VMDUMP spool file into a format appropriate for further analysis with crash.

-C <*class*> or --class <*class*>
specifies a spool class.

- For the receive function: The file is received only if it matches the specified class.
- For the purge function: Only files with the specified class are purged.
- For the punch or printer function: Sets the spool class for the virtual reader or virtual punch device. Output files inherit the spool class of the device.

The class is designated by a single alphanumeric character. For receive, it can also be an asterisk (*) to match all classes. Lowercase alphabetic characters are converted to uppercase.

See also "Spooling options" on page 665.

--dest <*device*>
sets the destination device for spool files that are created on the virtual punch or printer device. The value can be ANY, OFF, or it must be a valid device as defined on z/VM.

See also "Spooling options" on page 665.

-d or --device
specifies the device node of the virtual unit record device.

- If omitted in the receive function, `/dev/vmrdr-0.0.000c` is assumed.
- If omitted in the punch function, `/dev/vmpun-0.0.000d` is assumed.
- If omitted in the print function, `/dev/vmprt-0.0.000e` is assumed.

--dist <*distcode*>
sets the distribution code for spool files that are created on the virtual punch or printer device. The value can be an asterisk (*), OFF, or it must be a valid distribution code as defined on z/VM.

OFF and * are equivalent. Both specifications reset the distribution code to the value that is set in the user directory.

See also "Spooling options" on page 665.

-f or --force
suppresses confirmation messages.

- For the receive function: overwrites an existing output file without prompting for a confirmation.
- For the punch or print option: automatically converts the Linux input file name to a valid spool file name without any error message.
- For the purge function: purges the specified spool files without prompting for a confirmation.

--form <*form_name*>
sets the form name for spool files that are created on the virtual punch or printer device. The value can be OFF, to use the system default, or it must be a valid z/VM form name.

See also "Spooling options" on page 665.

-h or --help
displays help information for the command. To view the man page, enter **man vmur**.

-H or --hold
keeps the spool file to be received in the reader queue. If omitted, the spool file is purged after it is received.

-n <*node*> or --node <*node*>
specifies the node name of the z/VM system to which the data is to be transferred. Remote Spooling Communications Subsystem (RSCS) must be installed on the z/VM systems and the specified node must be defined in the RSCS machine's configuration file.

The default node is the local z/VM system. The node option is valid only with the `-u` option.

-N <*name*>.<*type*> or --name <*name*>.<*type*>
specifies a name and, optionally, a type for the z/VM spool file to be created by the punch or print option. To specify a type after the file name, enter a period followed by the type. For example:

```
# vmur pun -r /boot/parmfile -N myname.mytype
```

Both the name and the type must comply with z/VM file name rules, for example, they must be 1 - 8 characters long.

If omitted, a spool file name is generated from the Linux input file name, if applicable.

Use the **--force** option to suppress warning messages about automatically generated file names or about specified file names that do not adhere to the z/VM file naming rules.

-O or --stdout
writes the reader file content to standard output.

-q or --queue
specifies the z/VM spool file queue to be listed, purged, or ordered. If omitted, the reader file queue is assumed.

-r or --rdr
transferres a punch or print file to a reader.

-t or --text
converts the encoding between EBCDIC and ASCII according to character sets IBM037 and ISO-8859-1.

- For the receive function: receives the reader file as text file. That is, it converts EBCDIC to ASCII and inserts an ASCII line feed character (0x0a) for each input record that is read from the z/VM reader. Trailing EBCDIC blanks (0x40) in the input records are stripped.
- For the punch or print function: punches or prints the input file as text file. That is, converts ASCII to EBCDIC and pads each input line with trailing blanks to fill up the record. The record length is 80 for a punch and 132 for a printer. If an input line length exceeds 80 for punch or 132 for print, an error message is issued.

The **--text** and the **--blocked** attributes are mutually exclusive.

-u <*user*> or --user <*user*>
specifies the z/VM user ID to whose reader the data is to be transferred. If omitted, the data is transferred to your own machine's reader. The user option is valid only with the **-r** option.

-v or --version
displays version information.

Examples

These examples illustrate common scenarios for unit record devices.

In all examples the following device nodes are used:

- `/dev/vmrdr-0.0.000c` as virtual reader.
- `/dev/vmpun-0.0.000d` as virtual punch.

The vmur commands access the reader device, which has to be online. To set it online, it needs to be freed from cio_ignore. Example:

```
# cio_ignore -r c
# chccwdev -e c
Setting device 0.0.000c online
Done
```

Besides the vmur device driver and the **vmur** command, these scenarios require that:

- The vmcp module is loaded.
- The **vmcp** and **vmconvert** commands from the s390-tools package are available.

Creating and reading a guest memory dump

You can use the **vmur** command to read a guest memory dump that was created; for example, with the **vmcp** command.

Procedure

1. Produce a memory dump of the z/VM guest virtual machine memory:

   ```
   # vmcp vmdump
   ```

   Depending on the memory size this command might take some time to complete.
2. List the spool files for the reader to find the spool ID of the dump file, VMDUMP. In the example, the spool ID of VMDUMP is 463.

   ```
   # vmur li

   ORIGINID FILE CLASS RECORDS  CPY HOLD DATE  TIME     NAME   TYPE DIST
   T6360025 0463 V DMP 00020222 001 NONE 06/11 15:07:42 VMDUMP FILE T6360025
   ```

3. Read and convert the VMDUMP spool file to a file in the current working directory of the Linux file system:

   ```
   # vmur rec 463 -c linux_dump
   ```

Using FTP to receive and convert a dump file:

Use the `--convert` option together with the `--stdout` option to receive a VMDUMP spool file straight from the z/VM reader queue, convert it, and send it to another host with FTP.

Procedure

1. Establish an FTP session with the target host and log in.
2. Enter the FTP command `binary`.
3. Enter the FTP command:

```
put |"vmur re <spoolid> -c -O" <filename_on_target_host>
```

Logging and reading the z/VM guest virtual machine console

You can use the **vmur** command to read a console transcript that was spooled, for example, with the **vmcp** command.

Procedure

1. Begin console spooling:

```
# vmcp sp cons start
```

2. Produce output to the z/VM console. Use, for example, CP TRACE.
3. Stop console spooling, close the file with the console output, and transfer the file to the reader queue. In the resulting CP message, the spool ID follows the FILE keyword. In the example, the spool ID is 398:

```
# vmcp sp cons stop close \* rdr

RDR FILE 0398 SENT FROM T6360025 CON WAS 0398 RECS 1872 CPY 001 T NOHOLD NOKEEP
```

4. Read the file with the console output into a file in the current working directory on the Linux file system:

```
# vmur re -t 398 linux_cons
```

Preparing the z/VM reader as an IPL device for Linux

You can use the **vmur** command to transfer all files for booting Linux to the z/VM reader. You can also arrange the files such that the reader can be used as an IPL device.

Procedure

1. Send the kernel parameter file, `parmfile`, to the z/VM punch device and transfer the file to the reader queue. The resulting message shows the spool ID of the parameter file.

```
# vmur pun -r /boot/parmfile

Reader file with spoolid 0465 created.
```

2. Send the kernel image file to the z/VM punch device and transfer the file to the reader queue. The resulting message shows the spool ID of the kernel image file.

```
# vmur pun -r /boot/vmlinuz -N image

Reader file with spoolid 0466 created.
```

3. Optional: Check the spool IDs of `image` and `parmfile` in the reader queue. In this example, the spool ID of `parmfile` is 465 and the spool ID of `image` is 466.

```
# vmur li

ORIGINID FILE CLASS RECORDS  CPY HOLD DATE  TIME     NAME      TYPE     DIST
T6360025 0463 V DMP 00020222 001 NONE 06/11 15:07:42 VMDUMP    FILE     T6360025
T6360025 0465 A PUN 00000002 001 NONE 06/11 15:30:31 parmfile           T6360025
T6360025 0466 A PUN 00065200 001 NONE 06/11 15:30:52 image              T6360025
```

4. Move `image` to the first and `parmfile` to the second position in the reader queue:

```
# vmur or 465
# vmur or 466
```

5. Configure the z/VM reader as the re-IPL device:

```
# echo 0.0.000c > /sys/firmware/reipl/ccw/device
```

6. Boot Linux from the z/VM reader:

```
# reboot
```

Sending a file to different z/VM guest virtual machines

You can use the **vmur** command to send files to other z/VM guest virtual machines.

About this task

This scenario describes how to send a file called `lnxprofile.exec` from the file system of an instance of Linux on z/VM to other z/VM guest virtual machines.

For example, `lnxprofile.exec` could contain the content of a PROFILE EXEC file with CP and CMS commands to customize z/VM guest virtual machines for running Linux.

Procedure

1. Send `lnxprofile.exec` to two z/VM guest virtual machines: z/VM user ID t2930020 at node boet2930 and z/VM user ID t6360025 at node boet6360.

```
vmur pun lnxprofile.exec -t -r -u t2930020 -n boet2930 -N PROFILE
vmur pun lnxprofile.exec -t -r -u t6360025 -n boet6360 -N PROFILE
```

2. Log on to t2930020 at boet2930, IPL CMS, and issue the CP command:

```
QUERY RDR ALL
```

   The command output shows the spool ID of PROFILE in the FILE column.

3. Issue the CMS command:

```
RECEIVE <spoolid> PROFILE EXEC A (REPL
```

In the command, <*spoolid*> is the spool ID of PROFILE found in step 2 on page 672.

4. Repeat steps 2 on page 672 and 3 on page 672 for t6360025 at boet6360.

Sending a file to a z/VSE instance

You can use the **vmur** command to send files to a z/VSE instance.

Procedure

To send `lserv.job` to user ID vseuser at node vse01sys, issue:

```
vmur pun lserv.job -t -r -u vseuser -n vse01sys -N LSERV
```

zdsfs - Mount a z/OS DASD

Use the **zdsfs** command to mount z/OS DASDs as a Linux file system.

The zdsfs file system translates the z/OS data sets, which are stored on the DASDs in records of arbitrary or even variable size, into Linux semantics.

Through the zdsfs file system, applications on Linux can read z/OS physical sequential data sets (PS) and partitioned data sets (PDS) on the DASD. In the Linux file system, physical sequential data sets are represented as files. Partitioned data sets are represented as directories that contain the PDS members as files. Other z/OS data set formats, such as extended format data sets or VSAM data sets, are not supported. zdsfs is optimized for sequential read access.

zdsfs requires the FUSE library. SUSE Linux Enterprise Server 12 SP3 automatically installs this library.

Attention:

- To avoid data inconsistencies, set the DASDs offline in z/OS before you mount them in Linux.
- Through the zdsfs file system, the whole DASDs are accessible to Linux, but the access is not controlled by z/OS auditing mechanisms.

  To avoid security problems, you might want to dedicate the z/OS DASDs only for providing data for Linux.

Per default, only the Linux user who mounts the zdsfs file system has access to it.

Tip: If you want to grant a user group access to the zdsfs file system, mount it with the fuse options `default_permissions`, `allow_other`, and `gid`.

To unmount file systems that you mounted with **zdsfs**, you can use **fusermount**, whether root or non-root user. See the **fusermount** man page for details.

See *z/OS DFSMS Using Data Sets*, SC26-7410 for more information about z/OS data sets.

Before you begin:

- The raw-track access mode of the DASD must be enabled.

  Make sure that the DASD is set offline when you enable the raw-track access mode.

  See "Accessing full ECKD tracks" on page 141 for details.
- The DASD must be online.

  Tip: You can use the **chccwdev** command to enable the raw-track access mode and set the device online afterward in one step.

  Set the DASD offline in z/OS before you set it online in Linux.
- You must have the appropriate read permissions for the device node.

zdsfs syntax

```
►►─zdsfs──┬──────────────────┬──┬──────────────────┬──┬─ -l── <file-name>──┬──►
          └─ <zdsfs-options>─┘  └─ <fuse-options>─┘  └─ <node-list>───────┘

►─ <mount-point>──────────────────────────────────────────────────────────►◄
```

where:

<zdsfs-options>
zdsfs-specific options.

-o ignore_incomplete
represents all complete data sets in the file system, even if there are incomplete data sets. Incomplete data sets are not represented.

In z/OS, data sets might be distributed over different DASDs. For each incomplete data set, a warning message is issued to the standard error stream. If there are incomplete data sets and this option is not specified, the **zdsfs** command returns with an error.

-o rdw
keeps record descriptor words (RDWs) of data sets that are stored by using the z/OS concept of variable record lengths.

-o tracks=<*n*>
specifies the track buffer size in tracks. The default is 128 tracks.

zdsfs allocates a track buffer of <*n*>*120 KB for each open file to store and extract the user data. Increasing the track buffer size might improve your system performance.

-o seekbuffer=<*s*>
sets the maximum seek history buffer size in bytes. The default is 1,048,576 B.

zdsfs saves offset information about a data set in the seek history buffer to speed up the performance of a seek operation.

-o check_host_count
checks the host-access open count to ensure that the device is not online to another operating system instance. The operation is canceled if another operating system instance is accessing the volume.

<fuse-options>
options for FUSE. The following options are supported by the **zdsfs** command. To use an option, it must also be supported by the version of FUSE that is installed.

-d or -o debug
enables debug output (implies **-f**).

-f runs the command as a foreground operation.

-o allow_other
allows access to other users.

-o allow_root
allows access to root.

-o nonempty
allows mounts over files and non-empty directories.

-o default_permissions
enables permission checking by the kernel.

-o max_read=<*n*>
sets maximum size of read requests.

-o kernel_cache
caches files in the kernel.

-o [no]auto_cache
enables or disables caching based on modification times.

-o umask=<*mask*>
sets file permissions (octal).

-o uid=<*n*>
sets the file owner.

-o gid=<*n*>
sets the file group.

-o max_write=<*n*>
sets the maximum size of write requests.

-o max_readahead=<*n*>
sets the maximum readahead value.

-o async_read
performs reads asynchronously (default).

-o sync_read
performs reads synchronously.

<node-list>
one or more device nodes for the DASDs, separated by blanks.

<file-name>
a file that contains a node list.

<mount-point>
the mount point in the Linux file system where you want to mount the z/OS data sets.

-h or --help
displays help information for the command. To view the man page, enter **man zdsfs**.

-v or --version
displays version information for the command.

File characteristics

There are two ways to handle the z/OS characteristics of a file:

- The file `metadata.txt`:

  The `metadata.txt` file is in the root directory of the mount point. It contains one row for each file or directory, where:

  dsn
  specifies
  - the name of the file in the form <*file-name*> for z/OS physical sequential data sets.

– the name of the directory in the form *<directory-name>*, and the name of a file in that directory in the form *<directory-name>(<file-name>)* for z/OS partitioned data sets.

dsorg
specifies the organization of the file. The organization is PO for a directory, and PS for a file.

lrecl
specifies the record length of the file.

recfm
specifies the z/OS record format of the file. Supported record formats are: V, F, U, B, S, A, and M.

Example:

```
dsn=FOOBAR.TESTF.TXT,recfm=FB,lrecl=80,dsorg=PS
dsn=FOOBAR.TESTVB.TXT,recfm=VB,lrecl=100,dsorg=PS
dsn=FOOBAR.PDSF.DAT,recfm=F,lrecl=80,dsorg=PO
dsn=FOOBAR.PDSF.DAT(TEST1),recfm=F,lrecl=80,dsorg=PS
dsn=FOOBAR.PDSF.DAT(TEST2),recfm=F,lrecl=80,dsorg=PS
dsn=FOOBAR.PDSF.DAT(TEXT3),recfm=F,lrecl=80,dsorg=PS
```

- Extended attributes:

user.dsorg
specifies the organization of the file.

user.lrecl
specifies the record length of the file.

user.recfm
specifies the z/OS record format of the file.

You can use the following system calls to work with extended attributes:

listxattr
to list the current values of all extended attributes.

getxattr
to read the current value of a particular extended attribute.

You can use these system calls through the **getfattr** command. For more information, see the man pages of these commands and of the listxattr and getxattr system calls.

Examples

- Enable the raw-track access mode of DASD device 0.0.7000 and set the device online afterward:

```
# chccwdev -a raw_track_access=1 -e 0.0.7000
```

- Mount the partitioned data set on the DASDs represented by the file nodes `/dev/dasde` and `/dev/dasdf` at `/mnt`:

```
# zdsfs /dev/dasde /dev/dasdf /mnt
```

- As user "myuser", mount the partitioned data set on the DASD represented by the file node `/dev/dasde` at `/home/myuser/mntzos`:
  – Access the mounted file system exclusively:

```
# zdsfs /dev/dasde /home/myuser/mntzos
```

– Allow the root user to access the mounted file system:

```
# zdsfs -o allow_root /dev/dasde /home/myuser/mntzos
```

The **ls** command does not reflect these permissions. In both cases, it shows:

```
# ls -al /home/myuser/mntzos
total 121284
dr-xr-x--- 2 root   root          0 Dec  3 15:54 .
drwx------ 3 myuser myuser     4096 Dec  3 15:51 ..
-r--r----- 1 root   root    2833200 Jun 27  2012 EXPORT.BIN1.DAT
-r--r----- 1 root   root    2833200 Jun 27  2012 EXPORT.BIN2.DAT
-r--r----- 1 root   root    2833200 Jun 27  2012 EXPORT.BIN3.DAT
-r--r----- 1 root   root    2833200 Feb 14  2013 EXPORT.BIN4.DAT
dr-xr-x--- 2 root   root   13599360 Aug  9  2012 EXPORT.PDS1.DAT
dr-xr-x--- 2 root   root   13599360 Aug  9  2012 EXPORT.PDS2.DAT
dr-xr-x--- 2 root   root   13599360 Aug  9  2012 EXPORT.PDS3.DAT
dr-xr-x--- 2 root   root   55247400 Aug  9  2012 EXPORT.PDS4.DAT
-r--r----- 1 root   root        981 Dec  3 15:54 metadata.txt

$ ls -al /dev/dasde
brw-rw---- 1 root disk 94, 16 Dec  3 13:58 /dev/dasde
```

- As root user, mount the partitioned data set on the DASD represented by the file node `/dev/dasde` at `/mnt` on behalf of the user ID “myuser” (UID=1002), and permit the members of the group ID “zosimport” (GID=1002) file access:

```
# zdsfs /dev/dasde /mnt -o uid=1002,gid=1002,allow_other,default_permissions
```

The **ls** command indicates the owner “myuser” and the access right for group “zosimport”:

```
$ ls -al /mnt
total 121284
dr-xr-x---  2 myuser zosimport        0 Dec  3 14:22 .
drwxr-xr-x 23 root   root         4096 Dec  3 13:59 ..
-r--r-----  1 myuser zosimport      981 Dec  3 14:22 metadata.txt
-r--r-----  1 myuser zosimport  2833200 Jun 27  2012 EXPORT.BIN1.DAT
-r--r-----  1 myuser zosimport  2833200 Jun 27  2012 EXPORT.BIN2.DAT
-r--r-----  1 myuser zosimport  2833200 Feb 14  2013 EXPORT.BIN3.DAT
-r--r-----  1 myuser zosimport  2833200 Jun 27  2012 EXPORT.BIN4.DAT
dr-xr-x---  2 myuser zosimport 13599360 Aug  9  2012 EXPORT.PDS1.DAT
dr-xr-x---  2 myuser zosimport 13599360 Aug  9  2012 EXPORT.PDS2.DAT
dr-xr-x---  2 myuser zosimport 55247400 Aug  9  2012 EXPORT.PDS3.DAT
dr-xr-x---  2 myuser zosimport 13599360 Aug  9  2012 EXPORT.PDS4.DAT
```

- Unmount the partitioned data set that is mounted at `/mnt`:

```
# fusermount -u /mnt
```

- Show the extended attributes of a file, `FB.XMP.TXT`, on a z/OS DASD that is mounted on `/mnt`:

```
# getfattr -d /mnt/FB.XMP.TXT
```

- Show the extended attributes of all files on a z/OS DASD that is mounted on `/mnt`:

```
# cat /mnt/metadata.txt
```

znetconf - List and configure network devices

Use the **znetconf** command to list, configure, add, and remove network devices.

The **znetconf** command:

- Lists potential network devices.
- Lists configured network devices.
- Automatically configures and adds network devices.
- Removes network devices.

For automatic configuration, **znetconf** first builds a channel command word (CCW) group device from sensed CCW devices. It then configures any specified option through the sensed network device driver and sets the new network device online.

During automatic removal, **znetconf** sets the device offline and removes it.

Attention: Removing all network devices might lead to complete loss of network connectivity. Unless you can access your Linux instance from a terminal server on z/VM (see *How to Set up a Terminal Server Environment on z/VM*, SC34-2596), you might require the HMC or a 3270 terminal session to restore the connectivity.

Before you begin: The qeth, ctcm, or lcs device drivers must be loaded. If needed, the **znetconf** command attempts to load the particular device driver.

znetconf syntax

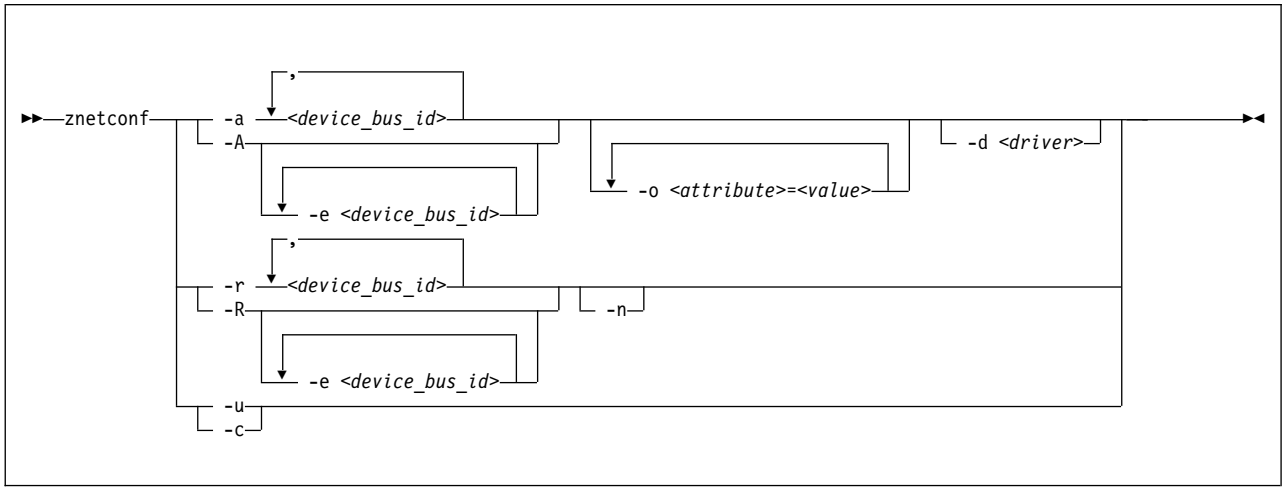

Where:

-a or --add
configures the network device with the specified device bus-ID. If you specify only one bus ID, the command automatically identifies the remaining bus IDs of the group device. You can enter a list of device bus-IDs that are separated by commas. The **znetconf** command does not check the validity of the combination of device bus-IDs.

<device_bus_id>
specifies the device bus-ID of the CCW devices that constitute the network device. If a device bus-ID begins with "0.0.", you can abbreviate it to the final hexadecimal digits. For example, you can abbreviate 0.0.f503 to f503.

-A or --add-all
configures all potential network devices. After you run **znetconf -A**, enter **znetconf -c** to see which devices were configured. You can also enter **znetconf -u** to display devices that were not configured.

-e or --except
omits the specified devices when configuring all potential network devices or removing all configured network devices.

-o or --option <*attribute*>=<*value*>
configures devices with the specified sysfs option.

-d or --driver <*driver name*>
configures devices with the specified device driver. Valid values are qeth, lcs, ctc, or ctcm.

-n or --non-interactive
answers all confirmation questions with "Yes".

-r or --remove
removes the network device with the specified device bus-ID. You can enter a list of device bus-IDs that are separated by a comma. You can remove only configured devices as listed by **znetconf -c**.

-R or --remove-all
removes all configured network devices. After successfully running this command, all devices that are listed by **znetconf -c** become potential devices that are listed by **znetconf -u**.

-u or --unconfigured
lists all network devices that are not yet configured.

-c or --configured
lists all configured network devices.

-h or --help
displays help information for the command. To view the man page, enter **man znetconf**.

-v or --version
displays version information.

If the command completes successfully, **znetconf** returns 0. Otherwise, 1 is returned.

Examples

- To list all potential network devices:

```
# znetconf -u
Device IDs                 Type    Card Type  CHPID Drv.
------------------------------------------------------------
0.0.f500,0.0.f501,0.0.f502 1731/01 OSA (QDIO) 00    qeth
0.0.f503,0.0.f504,0.0.f505 1731/01 OSA (QDIO) 01    qeth
```

- To configure device 0.0.f503:

```
znetconf -a 0.0.f503
```

or

```
znetconf -a f503
```

- To configure the potential network device 0.0.f500 with the layer2 option with the value 0:

```
znetconf -a f500 -o layer2=0
```

- To list configured network devices:

```
znetconf -c
Device IDs                 Type    Card Type     CHPID Drv. Name State
----------------------------------------------------------------------
0.0.f500,0.0.f501,0.0.f502 1731/01 Virt.NIC QDIO 00    qeth eth2 online
0.0.f503,0.0.f504,0.0.f505 1731/01 Virt.NIC QDIO 01    qeth eth1 online
0.0.f5f0,0.0.f5f1,0.0.f5f2 1731/01 OSD_1000      76    qeth eth0 online
```

- To remove network device 0.0.f503:

```
znetconf -r 0.0.f503
```

or

```
znetconf -r f503
```

- To remove all configured network devices except the devices with bus IDs 0.0.f500 and 0.0.f5f0:

```
znetconf -R -e 0.0.f500 -e 0.0.f5f0
```

- To configure all potential network devices except the device with bus ID 0.0.f503:

```
znetconf -A -e 0.0.f503
```

Chapter 54. Selected kernel parameters

You can use kernel parameters that are beyond the scope of an individual device driver or feature to configure Linux in general.

Device driver-specific kernel parameters are described in the setting up section of the respective device driver.

See Chapter 3, “Kernel and module parameters,” on page 25 for information about specifying kernel parameters.

cio_ignore - List devices to be ignored

Use the `cio_ignore=` kernel parameter to list specifications for I/O devices that are to be ignored.

When a Linux on z Systems instance boots, it senses and analyzes all available I/O devices. The following applies to ignored devices:

- Ignored devices are not sensed and analyzed. The device cannot be used until it is analyzed.
- Ignored devices are not represented in sysfs.
- Ignored devices do not occupy storage in the kernel.
- The subchannel to which an ignored device is attached is treated as if no device were attached.
- For Linux on z/VM, cio_ignore might hide essential devices such as the console. The console is typically device number 0.0.0009.

See also "Changing the exclusion list" on page 685.

Format

cio_ignore syntax

```
►►──cio_ignore=──┬─all──────────────────┬──┬──────────────────────────────────────────────┬──►◄
                 └─┤ <device_spec> ├────┘  │   ┌──────────────────────────────────┐         │
                                           └─,─┬──┬─┐──┬─────────────────────────┬─┴─┘       │
                                               │  │ │  │ <device_spec> │           │
                                               │  └─!─┘  └───────────────────────┘           │
                                               └─────────────────────────────────────────────┘
```

<device_spec>:

```
├──┬─<device_bus_id>──────────────────────────────────────────────────────────────────────┤
   ├─<from_device_bus_id>-<to_device_bus_id>─┤
   ├─ipldev──────────────────────────────────┤
   └─condev──────────────────────────────────┘
```

Where:

all
states that all devices are to be ignored.

<device_bus_id>
specifies a device. Device bus-IDs are of the form 0.*<n>*.*<devno>*, where *<n>* is a subchannel set ID and *<devno>* is a device number.

<from_device_bus_id>-<to_device_bus_id>
are two device bus-IDs that specify the first and the last device in a range of devices.

ipldev
specifies the IPL device. Use this keyword with the `!` operator to avoid ignoring the IPL device.

condev
specifies the CCW console. Use this keyword with the ! operator to avoid ignoring the console device.

! makes the following term an exclusion statement. This operator is used to exclude individual devices or ranges of devices from a preceding more general specification of devices.

Examples

- This example specifies that all devices in the range 0.0.b100 through 0.0.b1ff, and the device 0.0.a100 are to be ignored.

  ```
  cio_ignore=0.0.b100-0.0.b1ff,0.0.a100
  ```

- This example specifies that all devices are to be ignored.

  ```
  cio_ignore=all
  ```

- This example specifies that all devices except the console are to be ignored.

  ```
  cio_ignore=all,!condev
  ```

- This example specifies that all devices but the range 0.0.b100 through 0.0.b1ff, and the device 0.0.a100 are to be ignored.

  ```
  cio_ignore=all,!0.0.b100-0.0.b1ff,!0.0.a100
  ```

- This example specifies that all devices in the range 0.0.1000 through 0.0.1500 are to be ignored, except for devices in the range 0.0.1100 through 0.0.1120.

  ```
  cio_ignore=0.0.1000-0.0.1500,!0.0.1100-0.0.1120
  ```

  This is equivalent to the following specification:

  ```
  cio_ignore=0.0.1000-0.0.10ff,0.0.1121-0.0.1500
  ```

- This example specifies that all devices in range 0.0.1000 through 0.0.1100 and all devices in range 0.1.7000 through 0.1.7010, plus device 0.0.1234 and device 0.1.4321 are to be ignored.

  ```
  cio_ignore=0.0.1000-0.0.1100, 0.1.7000-0.1.7010, 0.0.1234, 0.1.4321
  ```

Changing the exclusion list

Use the **cio_ignore** command or the procfs interface to view or change the list of I/O device specifications that are ignored.

When a Linux on z Systems instance boots, it senses and analyzes all available I/O devices. You can use the cio_ignore kernel parameter to list specifications for devices that are to be ignored.

On a running Linux instance, you can view and change the exclusion list through a procfs interface or with the **cio_ignore** command (see "cio_ignore - Manage the I/O exclusion list" on page 522). This information describes the procfs interface.

After booting Linux you can display the exclusion list by issuing:

```
# cat /proc/cio_ignore
```

To add device specifications to the exclusion list issue a command of this form:

```
# echo add <device_list> > /proc/cio_ignore
```

When you add specifications for a device that is already sensed and analyzed, there is no immediate effect of adding it to the exclusion list. For example, the device still appears in the output of the **lscss** command and can be set online. However, if the device later becomes unavailable, it is ignored when it reappears. For example, if the device is detached in z/VM it is ignored when it is attached again.

To make all devices that are in the exclusion list and that are currently offline unavailable to Linux issue a command of this form:

```
# echo purge > /proc/cio_ignore
```

This command does not make devices unavailable if they are online.

To remove device specifications from the exclusion list issue a command of this form:

```
# echo free <device_list> > /proc/cio_ignore
```

When you remove device specifications from the exclusion list, the corresponding devices are sensed and analyzed if they exist. Where possible, the respective device driver is informed, and the devices become available to Linux.

In these commands, *<device_list>* follows this syntax:

<device_list>:

```
├──┬─all──────────────┬──┬──────────────────────────────────────┬──┤
   └─┤ <device_spec> ├─┘  │   ┌──────────────────────────┐        │
                          │   ▼                          ┌─┐      │
                          └─,──┬──────┬──┤ <device_spec> ├──┘
                               └──!───┘
```

<device_spec>:

```
├──┬─<device_bus_id>──────────────────────────┬──────────────────────────────────────┤
   └─<from_device_bus_id>-<to_device_bus_id>─┘
```

Where the keywords and variables have the same meaning as in “Format” on page 684.

Ensure device availability

After the echo command completes successfully, some time might elapse until the freed device becomes available to Linux. Issue the following command to ensure that the device is ready to be used:

```
# echo 1 > /proc/cio_settle
```

This command returns after all required sysfs structures for the newly available device are completed.

The **cio_ignore** command (see "cio_ignore - Manage the I/O exclusion list" on page 522) also returns after any new sysfs structures are completed so you do not need a separate **echo** command when using **cio_ignore** to remove devices from the exclusion list.

Results

The dynamically changed exclusion list is only taken into account when a device in this list is newly made available to the system, for example after it is defined to the system. It does not have any effect on setting devices online or offline within Linux.

Examples

- This command removes all devices from the exclusion list.

```
# echo free all > /proc/cio_ignore
```

- This command adds all devices in the range 0.0.b100 through 0.0.b1ff and device 0.0.a100 to the exclusion list.

```
# echo add 0.0.b100-0.0.b1ff,0.0.a100 > /proc/cio_ignore
```

- This command lists the ranges of devices that are ignored by common I/O.

```
# cat /proc/cio_ignore
0.0.0000-0.0.a0ff
0.0.a101-0.0.b0ff
0.0.b200-0.0.ffff
```

- This command removes all devices in the range 0.0.b100 through 0.0.b1ff and device 0.0.a100 from the exclusion list.

```
# echo free 0.0.b100-0.0.b1ff,0.0.a100 > /proc/cio_ignore
```

- This command removes the device with bus ID 0.0.c104 from the exclusion list.

```
# echo free 0.0.c104 > /proc/cio_ignore
```

- This command adds the device with bus ID 0.0.c104 to the exclusion list.

```
# echo add 0.0.c104 > /proc/cio_ignore
```

- This command makes all devices that are in the exclusion list and that are currently offline unavailable to Linux.

```
# echo purge > /proc/cio_ignore
```

cmma - Reduce hypervisor paging I/O overhead

Use the `cmma=` kernel parameter to reduce hypervisor paging I/O overhead.

With Collaborative Memory Management Assist (CMMA, or "cmm2") support, the z/VM control program and guest virtual machines can communicate attributes for specific 4K-byte blocks of guest memory. This exchange of information helps both the z/VM host and the guest virtual machines to optimize their use and management of memory.

Format

cmma syntax

```
┌─cmma=──┬─yes─┬─┐
│        └─on──┘ │
├────────────────┤
└─cmma=──┬─no──┬─┘
         └─off─┘
```

Examples

This specification disables the CMMA support:

```
cmma=off
```

Alternatively, you can use the following specification to disable the CMMA support:

```
cmma=no
```

fips - Run Linux in FIPS mode

In Federal Information Processing Standard (FIPS) mode, the kernel enforces FIPS 140-2 security standards. For example, in FIPS mode only FIPS 140-2 approved encryption algorithms can be used (see "FIPS restrictions of the hardware capabilities" on page 457).

For more information about FIPS, go to csrc.nist.gov/publications/PubsFIPS.html.

Format

fips syntax

```
      ┌─fips=0─┐
►►────┤        ├──────────────────────────────────────────────────►◄
      └─fips=1─┘
```

`1` enables the FIPS mode. `0`, the default, disables the FIPS mode.

Example

```
fips=1
```

maxcpus - Limit the number of CPUs Linux can use at IPL

Use the `maxcpus=` kernel parameter to limit the number of CPUs that Linux can use at IPL and that are online after IPL.

If the real or virtual hardware provides more than the specified number of CPUs, these surplus CPUs are initially offline. For example, if five CPUs are available, `maxcpus=2` results in two online CPUs and three offline CPUs after IPL.

Offline CPUs can be set online dynamically unless the `possible_cpus=` parameter is set and specifies a maximum number of online CPUs that is already reached. The `possible_cpus=` parameter sets an absolute limit for the number of CPUs that can be online at any one time (see possible_cpus). If both `maxcpus=` and `possible_cpus=` are set, a lower value for `possible_cpus=` overrides `maxcpus=` and makes it ineffective.

Format

maxcpus syntax

```
►►──maxcpus=<number>──────────────────────────────────────────────────►◄
```

Examples

```
maxcpus=2
```

nosmt - Disable simultaneous multithreading

By default, Linux in LPAR mode uses simultaneous multithreading if it is supported by the hardware. Specify the `nosmt` kernel parameter to disable simultaneous multithreading. See also "smt - Reduce the number of threads per core" on page 696.

For more information about simultaneous multithreading, see "Simultaneous multithreading" on page 331.

Format

nosmt syntax

```
►►──nosmt──────────────────────────────────────────────────────────►◄
```

possible_cpus - Limit the number of CPUs Linux can use

Use the `possible_cpus=` parameter to set an absolute limit for the number of CPUs that can be online at any one time. If the real or virtual hardware provides more than the specified maximum, the surplus number of CPUs must be offline. Alternatively, you can use the common code kernel parameter `nr_cpus`.

Use the `maxcpus=` parameter to limit the number of CPUs that are online initially after IPL (see maxcpus).

Format

possible_cpus syntax

```
►►──possible_cpus=<number>──────────────────────────────────────────►◄
```

Examples

```
possible_cpus=8
```

ramdisk_size - Specify the ramdisk size

Use the `ramdisk_size=` kernel parameter to specify the size of the ramdisk in kilobytes.

Format

ramdisk_size syntax

```
►►──ramdisk_size=<size>──────────────────────────────────────────►◄
```

Examples

```
ramdisk_size=32000
```

ro - Mount the root file system read-only

Use the `ro` kernel parameter to mount the root file system read-only.

Format

ro syntax

```
►►──ro──────────────────────────────────────────────────────────►◄
```

root - Specify the root device

Use the `root=` kernel parameter to tell Linux what to use as the root when mounting the root file system.

Format

root syntax

```
►►──root=<rootdevice>──────────────────────────────────────────►◄
```

Examples

This example makes Linux use `/dev/dasda1` when mounting the root file system:

```
root=/dev/dasda1
```

smt - Reduce the number of threads per core

By default, Linux in LPAR mode uses the maximum number of threads per core that is supported by the hardware. Use the `smt=` kernel parameter to use fewer threads. The value can be any integer in the range 1 to the maximum number of threads that is supported by the hardware.

Specifying `smt=1` effectively disables simultaneous multithreading. See also "nosmt - Disable simultaneous multithreading" on page 691.

For more information about simultaneous multithreading, see "Simultaneous multithreading" on page 331.

Format

smt syntax

```
►►─┬─smt=<hwmax>─┬──────────────────────────────────────────────────────►◄
   └─smt=<number>─┘
```

where *<hwmax>* is the maximum number of threads per core that is supported by the hardware, and *<number>* is an integer in the range 1 - *<hwmax>*.

Examples

```
smt=1
```

vdso - Optimize system call performance

Use the `vdso=` kernel parameter to control the vdso support for the `gettimeofday`, `clock_getres`, and `clock_gettime` system calls.

The virtual dynamic shared object (vdso) support is a shared library that the kernel maps to all dynamically linked programs. The glibc detects the presence of the vdso and uses the functions that are provided in the library.

Because the vdso library is mapped to all user-space processes, this change is visible in user space. In the unlikely event that a user-space program does not work with the vdso support, you can disable the support.

The default, which is to use vdso support, works well for most installations. Do not override this default, unless you observe problems.

The vdso support is included in the Linux kernel.

Format

vdso syntax

```
   ┌─vdso=──┬─1──┬─┐
   │        └─on─┘ │
►►─┼───────────────┼──────────────────────────────────────────►◄
   └─vdso=──┬─0──┬─┘
            └─off─┘
```

Examples

This example disables the vdso support:

```
vdso=0
```

vmhalt - Specify CP command to run after a system halt

Use the `vmhalt=` kernel parameter to specify a command to be issued to CP after a system halt.

This command applies only to Linux on z/VM.

Format

vmhalt syntax

```
►►──vmhalt=<COMMAND>──────────────────────────────────────────────────►◄
```

Examples

This example specifies that an initial program load of CMS is to follow the Linux **`halt`** command:

```
vmhalt="CPU 00 CMD I CMS"
```

Note: The command must be entered in uppercase.

vmpanic - Specify CP command to run after a kernel panic

Use the `vmpanic=` kernel parameter to specify a command to be issued to CP after a kernel panic.

This command applies only to Linux on z/VM.

Note: Ensure that the **dumpconf** service is disabled when you use this kernel parameter. Otherwise, **dumpconf** will override the setting.

Format

vmpanic syntax

```
►►──vmpanic=<COMMAND>──────────────────────────────────────────────────►◄
```

Examples

This example specifies that a VMDUMP is to follow a kernel panic:

```
vmpanic="VMDUMP"
```

Note: The command must be entered in uppercase.

vmpoff - Specify CP command to run after a power off

Use the `vmpoff=` kernel parameter to specify a command to be issued to CP after a system power off.

This command applies only to Linux on z/VM.

Format

vmpoff syntax

```
►►──vmpoff=<COMMAND>──────────────────────────────────────────────────►◄
```

Examples

This example specifies that CP is to clear the guest virtual machine after the Linux **`power off`** or **`halt -p`** command:

```
vmpoff="SYSTEM CLEAR"
```

Note: The command must be entered in uppercase.

vmreboot - Specify CP command to run on reboot

Use the `vmreboot=` kernel parameter to specify a command to be issued to CP on reboot.

This command applies only to Linux on z/VM.

Format

vmreboot syntax

```
►►──vmreboot=<COMMAND>──────────────────────────────────────────────►◄
```

Examples

This example specifies a message to be sent to the z/VM guest virtual machine OPERATOR if a reboot occurs:

```
vmreboot="MSG OPERATOR Reboot system"
```

Note: The command must be entered in uppercase.

Chapter 55. Linux diagnose code use

SUSE Linux Enterprise Server 12 SP3 for z Systems issues several diagnose instructions to the hypervisor (LPAR or z/VM).

Table 66 lists all diagnoses that are used by the Linux kernel or a kernel module.

Linux can fail if you change the privilege class of the diagnoses marked as **required** by using the `MODIFY diag` command in z/VM.

Table 66. Linux diagnoses

Number	Description	Linux use	Required/ Optional
0x008	z/VM CP command console interface	• The **vmcp** command • The 3215 and 3270 console drivers • The z/VM recording device driver (vmlogrdr) • smsgiucv	Required
0x010	Release pages	CMM	Required
0x014	Input spool file manipulation	The vmur device driver	Required
0x044	Voluntary time-slice end	In the kernel for spinlock and udelay	Required
0x064	Allows Linux to attach a DCSS	The DCSS block device driver (dcssblk), and the MONITOR record device driver (monreader).	Required
0x09c	Voluntary time slice yield	Spinlock.	Optional
0x0dc	Monitor stream	The APPLDATA monitor record and the MONITOR stream application support (monwriter).	Required
0x204	LPAR Hypervisor data	The hypervisor file system (hypfs).	Required
0x210	Retrieve device information	• The common I/O layer • The DASD driver DIAG access method • DASD read-only query • The vmur device driver	Required
0x224	CPU type name table	The hypervisor file system (hypfs).	Required
0x250	Block I/O	The DASD driver DIAG access method.	Required
0x258	Page-reference services	In the kernel, for pfault.	Optional
0x288	Virtual machine time bomb	The watchdog device driver.	Required
0x2fc	Hypervisor cpu and memory accounting data	The hypervisor file system (hypfs).	Required
0x308	Re-ipl	Re-ipl and dump code.	Required
0x500	Virtio functions	Operate virtio-ccw devices	Required

Required means that a function is not available without the diagnose; optional means that the function is available but there might be a performance impact.

Part 11. Appendixes

Appendix A. Accessibility

Accessibility features help users who have a disability, such as restricted mobility or limited vision, to use information technology products successfully.

Documentation accessibility

The Linux on z Systems and LinuxONE publications are in Adobe Portable Document Format (PDF) and should be compliant with accessibility standards. If you experience difficulties when you use the PDF file and want to request a Web-based format for this publication, use the Readers' Comments form in the back of this publication, send an email to eservdoc@de.ibm.com, or write to:

IBM Deutschland Research & Development GmbH
Information Development
Department 3282
Schoenaicher Strasse 220
71032 Boeblingen
Germany

In the request, be sure to include the publication number and title.

When you send information to IBM, you grant IBM a nonexclusive right to use or distribute the information in any way it believes appropriate without incurring any obligation to you.

IBM and accessibility

See the IBM Human Ability and Accessibility Center for more information about the commitment that IBM has to accessibility at

`www.ibm.com/able`

Appendix B. Understanding syntax diagrams

This section describes how to read the syntax diagrams in this manual.

To read a syntax diagram follow the path of the line. Read from left to right and top to bottom.

- The ►►── symbol indicates the beginning of a syntax diagram.
- The ──► symbol, at the end of a line, indicates that the syntax diagram continues on the next line.
- The ►── symbol, at the beginning of a line, indicates that a syntax diagram continues from the previous line.
- The ──►◄ symbol indicates the end of a syntax diagram.

Syntax items (for example, a keyword or variable) may be:

- Directly on the line (required)
- Above the line (default)
- Below the line (optional)

If defaults are determined by your system status or settings, they are not shown in the diagram. Instead the rule is described together with the option, keyword, or variable in the list following the diagram.

Case sensitivity

Unless otherwise noted, entries are case sensitive.

Symbols

You **must** code these symbols exactly as they appear in the syntax diagram

*	Asterisk
:	Colon
,	Comma
=	Equal sign
-	Hyphen
//	Double slash
( )	Parentheses
.	Period
+	Add
$	Dollar sign

For example:

```
dasd=0.0.7000-0.0.7fff
```

Variables

An <*italicized*> lowercase word enclosed in angled brackets indicates a variable that you must substitute with specific information. For example:

```
►►── -p ──<interface>──────────────────────────────────────────►◄
```

Here you must code `-p` as shown and supply a value for <*interface*>.

An italicized uppercase word in angled brackets indicates a variable that must appear in uppercase:

```
►►──vmhalt──=──<COMMAND>──────────────────────────────────────────►◄
```

Repetition

An arrow returning to the left means that the item can be repeated.

```
►►──┬──────────┐
    ▼ <repeat> ├──────────────────────────────────────────────────►◄
```

A character within the arrow means you must separate repeated items with that character.

```
►►──┬─,────────┐
    ▼ <repeat> ├──────────────────────────────────────────────────►◄
```

Defaults

Defaults are above the line. The system uses the default unless you override it. You can override the default by coding an option from the stack below the line. For example:

```
►►──┬─A─┐
    ├───┤──────────────────────────────────────────────────────────►◄
    ├─B─┤
    └─C─┘
```

In this example, A is the default. You can override `A` by choosing `B` or `C`.

Required Choices

When two or more items are in a stack and one of them is on the line, you **must** specify one item. For example:

```
►►──┬─A─┐──────────────────────────────────────────────────────────►◄
    ├─B─┤
    └─C─┘
```

Here you must enter either `A` or `B` or `C`.

Optional Choice

When an item is below the line, the item is optional. Only one item **may** be chosen. For example:

```
►►──┬───┐──────────────────────────────────────────────────────────►◄
    ├─A─┤
    ├─B─┤
    └─C─┘
```

Here you may enter either `A` or `B` or `C`, or you may omit the field.

Notices

This information was developed for products and services offered in the U.S.A. IBM may not offer the products, services, or features discussed in this document in other countries. Consult your local IBM representative for information on the products and services currently available in your area. Any reference to an IBM product, program, or service is not intended to state or imply that only that IBM product, program, or service may be used. Any functionally equivalent product, program, or service that does not infringe any IBM intellectual property right may be used instead. However, it is the user's responsibility to evaluate and verify the operation of any non-IBM product, program, or service.

IBM may have patents or pending patent applications covering subject matter described in this document. The furnishing of this document does not give you any license to these patents. You can send license inquiries, in writing, to:

IBM Director of Licensing
IBM Corporation
North Castle Drive
Armonk, NY 10504-1785
U.S.A.

The following paragraph does not apply to the United Kingdom or any other country where such provisions are inconsistent with local law:
INTERNATIONAL BUSINESS MACHINES CORPORATION PROVIDES THIS PUBLICATION "AS IS" WITHOUT WARRANTY OF ANY KIND, EITHER EXPRESS OR IMPLIED, INCLUDING, BUT NOT LIMITED TO, THE IMPLIED WARRANTIES OF NON-INFRINGEMENT, MERCHANTABILITY OR FITNESS FOR A PARTICULAR PURPOSE. Some states do not allow disclaimer of express or implied warranties in certain transactions, therefore, this statement may not apply to you.

This information could include technical inaccuracies or typographical errors. Changes are periodically made to the information herein; these changes will be incorporated in new editions of the publication. IBM may make improvements and/or changes in the product(s) and/or the program(s) described in this publication at any time without notice.

Any references in this information to non-IBM Web sites are provided for convenience only and do not in any manner serve as an endorsement of those Web sites. The materials at those Web sites are not part of the materials for this IBM product and use of those Web sites is at your own risk.

IBM may use or distribute any of the information you supply in any way it believes appropriate without incurring any obligation to you.

The licensed program described in this information and all licensed material available for it are provided by IBM under terms of the IBM Customer Agreement, IBM International Program License Agreement, or any equivalent agreement between us.

All statements regarding IBM's future direction or intent are subject to change or withdrawal without notice, and represent goals and objectives only.

This information is for planning purposes only. The information herein is subject to change before the products described become available.

Trademarks

IBM, the IBM logo, and ibm.com are trademarks or registered trademarks of International Business Machines Corp., registered in many jurisdictions worldwide. Other product and service names might be trademarks of IBM or other companies. A current list of IBM trademarks is available on the Web at "Copyright and trademark information" at
www.ibm.com/legal/copytrade.shtml

Adobe is either a registered trademark or trademark of Adobe Systems Incorporated in the United States, and/or other countries.

Java and all Java-based trademarks and logos are trademarks or registered trademarks of Oracle and/or its affiliates.

Linux is a registered trademark of Linus Torvalds in the United States, other countries, or both.

UNIX is a registered trademark of The Open Group in the United States and other countries.

Bibliography

The publications listed in this chapter are considered useful for a more detailed study of the topics contained in this publication.

Linux on z Systems publications

The Linux on z Systems publications can be found on the developerWorks website.

You can find the latest versions of these publications
on IBM Knowledge Center at
www.ibm.com/support/knowledgecenter/linuxonibm/liaaf/lnz_r_suse.html
or on developerWorks at
www.ibm.com/developerworks/linux/linux390/documentation_suse.html

- *Device Drivers, Features, and Commands on SUSE Linux Enterprise Server 12 SP3 as a KVM Guest*, SC34-2756
- *Using the Dump Tools on SUSE Linux Enterprise Server 12 SP1*, SC34-2746
- *Kernel Messages on SUSE Linux Enterprise Server 12 SP3*, SC34-2747

For each of the following publications, you can find the version that most closely reflects SUSE Linux Enterprise Server 12 SP3:

- *How to use FC-attached SCSI devices with Linux on z Systems*, SC33-8413
- *libica Programmer's Reference*, SC34-2602
- *Exploiting Enterprise PKCS #11 using openCryptoki*, SC34-2713
- *Secure Key Solution with the Common Cryptographic Architecture Application Programmer's Guide*, SC33-8294
- *Linux on z Systems Troubleshooting*, SC34-2612
- *Linux Health Checker User's Guide*, SC34-2609
- *How to Improve Performance with PAV*, SC33-8414
- *How to Set up a Terminal Server Environment on z/VM*, SC34-2596

SUSE Linux Enterprise Server 12 SP3 publications

The documentation for SUSE Linux Enterprise Server 12 SP3 can be found on the SUSE website.

Go to www.suse.com/documentation for the following publications:

- *SUSE Linux Enterprise Server 12 SP3 Deployment Guide*
- *SUSE Linux Enterprise Server 12 SP3 Administration Guide*
- *SUSE Linux Enterprise Server 12 SP3 Storage Administration Guide*

Go to www.suse.com/documentation/sle_ha for the following publication:

- *SUSE Linux Enterprise High Availability Extension High Availability Guide*

z/VM publications

The publication numbers listed are for z/VM version 6.

For the complete library including other versions, see
`www.ibm.com/vm/library`

- *z/VM Connectivity*, SC24-6174
- *z/VM CP Commands and Utilities Reference*, SC24-6175
- *z/VM CP Planning and Administration*, SC24-6178
- *z/VM CP Programming Services*, SC24-6179
- *z/VM Getting Started with Linux on System z*, SC24-6194
- *z/VM Performance*, SC24-6208
- *z/VM Saved Segments Planning and Administration*, SC24-6229
- *z/VM Systems Management Application Programming*, SC24-6234
- *z/VM TCP/IP Planning and Customization*, SC24-6238
- *z/VM Virtual Machine Operation*, SC24-6241
- *REXX/VM Reference*, SC24-6221
- *REXX/VM User's Guide*, SC24-6222

IBM Redbooks publications

You can search for, view, or download Redbooks publications, Redpapers™, Hints and Tips, draft publications and additional materials on the Redbooks website.

You can also order hardcopy Redbooks or CD-ROMs, at
`www.ibm.com/redbooks`

- *IBM zEnterprise Unified Resource Manager*, SG24-7921
- *Building Linux Systems under IBM VM*, REDP-0120
- *FICON CTC Implementation*, REDP-0158
- *Networking Overview for Linux on zSeries*, REDP-3901
- *Linux on IBM eServer zSeries and S/390: TCP/IP Broadcast on z/VM Guest LAN*, REDP-3596
- *Linux on IBM eServer zSeries and S/390: VSWITCH and VLAN Features of z/VM 4.4*, REDP-3719
- *Security on z/VM*, SG24-7471
- *IBM Communication Controller Migration Guide*, SG24-6298
- *Problem Determination for Linux on System z*, SG24-7599
- *Linux for IBM System z9® and IBM zSeries*, SG24-6694

Other z Systems publications

General z Systems publications that might be of interest in the context of Linux on z Systems.

- *zEnterprise System Introduction to Ensembles*, GC27-2609
- *zEnterprise System Ensemble Planning and Configuring Guide*, GC27-2608
- *System z Application Programming Interfaces*, SB10-7030
- *IBM TotalStorage Enterprise Storage Server System/390 Command Reference 2105 Models E10, E20, F10, and F20*, SC26-7295
- *Processor Resource/Systems Manager Planning Guide*, SB10-7041

- *z/Architecture Principles of Operation*, SA22-7832
- *z/Architecture The Load-Program-Parameter and the CPU-Measurement Facilities*, SA23-2260
- *IBM The CPU-Measurement Facility Extended Counters Definition for z10, z196, z114 and zEC12*, SA23-2261

Networking publications

- *HiperSockets Implementation Guide*, SG24-6816
- *Open Systems Adapter-Express Customer's Guide and Reference*, SA22-7935
- *OSA-Express Implementation Guide*, SG24-5948

Security related publications

- *zSeries Crypto Guide Update*, SG24-6870
- *Secure Key Solution with the Common Cryptographic Architecture Application Programmer's Guide*, SC33-8294

ibm.com resources

On the ibm.com® website you can find information about many aspects of Linux on z Systems including z/VM, I/O connectivity, and cryptography.

- For CMS and CP Data Areas, Control Block information, and the layout of the z/VM monitor records see

  `www.ibm.com/vm/pubs/ctlblk.html`
- For I/O connectivity on z Systems information, see

  `www.ibm.com/systems/z/connectivity`
- For Communications server for Linux information, see

  `www.ibm.com/software/network/commserver/linux`
- For information about performance monitoring on z/VM, see

  `www.ibm.com/vm/perf`
- For cryptographic coprocessor information, see

  `www.ibm.com/security/cryptocards`
- (Requires registration.) For information for planning, installing, and maintaining IBM systems, see

  `www.ibm.com/servers/resourcelink`
- For information about STP, see

  `www.ibm.com/systems/z/advantages/pso/stp.html`

Glossary

This glossary includes IBM product terminology as well as selected other terms and definitions.

Additional information can be obtained in:

- The American National Standard Dictionary for Information Systems, ANSI X3.172-1990, copyright 1990 by the American National Standards Institute (ANSI). Copies may be purchased from the American National Standards Institute, 11 West 42nd Street, New York, New York 10036.
- The ANSI/EIA Standard–440-A, Fiber Optic Terminology. Copies may be purchased from the Electronic Industries Association, 2001 Pennsylvania Avenue, N.W., Washington, DC 20006.
- The Information Technology Vocabulary developed by Subcommittee 1, Joint Technical Committee 1, of the International Organization for Standardization and the International Electrotechnical Commission (ISO/IEC JTC1/SC1).
- The IBM Dictionary of Computing, New York: McGraw-Hill, 1994.
- Internet Request for Comments: 1208, Glossary of Networking Terms
- Internet Request for Comments: 1392, Internet Users' Glossary
- The Object-Oriented Interface Design: IBM Common User Access Guidelines , Carmel, Indiana: Que, 1992.

Numerics

10 Gigabit Ethernet. An Ethernet network with a bandwidth of 10000-Mbps.

3215. IBM console printer-keyboard.

3270. IBM information display system.

3370, 3380 or 3390. IBM direct access storage device (disk).

3480, 3490, 3590. IBM magnetic tape subsystem.

3DES. See Triple Data Encryption Standard.

9336 or 9345. IBM direct access storage device (disk).

A

address space. The range of addresses available to a computer program or process. Address space can see physical storage, virtual storage, or both.

auto-detection. Listing the addresses of devices attached to a card by issuing a query command to the card.

C

CCL.

The Communication Controller for Linux on z Systems (CCL) replaces the 3745/6 Communication Controller so that the Network Control Program (NCP) software can continue to provide business critical functions like SNI, XRF, BNN, INN, and SSCP takeover. This allows you to leverage your existing NCP functions on a "virtualized" communication controller within the Linux on z Systems environment.

CEC. (Central Electronics Complex). A synonym for *CPC*.

channel subsystem. The programmable input/output processors of the z Systems, which operate in parallel with the cpu.

checksum. An error detection method using a check byte appended to message data

CHPID. channel path identifier. In a channel subsystem, a value assigned to each installed channel path of the system that uniquely identifies that path to the system.

compatible disk layout. A disk structure for Linux on z Systems which allows access from other z Systems operating systems. This replaces the older Linux disk layout.

Console. In Linux, an output device for kernel messages.

CPC. (Central Processor Complex). A physical collection of hardware that includes main storage, one or more central processors, timers, and channels. Also referred to as a *CEC*.

CRC. cyclic redundancy check. A system of error checking performed at both the sending and receiving station after a block-check character has been accumulated.

CSMA/CD. carrier sense multiple access with collision detection

CTC. channel to channel. A method of connecting two computing devices.

CUU. control unit and unit address. A form of addressing for z Systems devices using device numbers.

D

DASD. direct access storage device. A mass storage medium on which a computer stores data.

device driver.

- A file that contains the code needed to use an attached device.
- A program that enables a computer to communicate with a specific peripheral device; for example, a printer, a videodisc player, or a CD-ROM drive.
- A collection of subroutines that control the interface between I/O device adapters and the processor.

DIAGNOSE. In z/VM, a set of instructions that programs running on z/VM guest virtual machines can call to request CP services.

disconnected device. In Linux on z Systems, a device that is online, but to which Linux can no longer find a connection. Reasons include:

- The device was physically removed
- The device was logically removed, for example, with a CP DETACH command in z/VM
- The device was varied offline

E

ECKD. extended count-key-data device. A disk storage device that has a data transfer rate faster than some processors can utilize and that is connected to the processor through use of a speed matching buffer. A specialized channel program is needed to communicate with such a device.

ESCON. enterprise systems connection. A set of IBM products and services that provide a dynamically connected environment within an enterprise.

Ethernet. A 10-Mbps baseband local area network that allows multiple stations to access the transmission medium at will without prior coordination, avoids contention by using carrier sense and deference, and resolves contention by using collision detection and delayed retransmission. Ethernet uses CSMA/CD.

F

FBA. fixed block architecture. An architecture for a virtual device that specifies the format of and access mechanisms for the virtual data units on the device. The virtual data unit is a block. All blocks on the device are the same size (fixed size). The system can access them independently.

FDDI. fiber distributed data interface. An American National Standards Institute (ANSI) standard for a 100-Mbps LAN using optical fiber cables.

fibre channel. A technology for transmitting data between computer devices. It is especially suited for attaching computer servers to shared storage devices and for interconnecting storage controllers and drives.

FTP. file transfer protocol. In the Internet suite of protocols, an application layer protocol that uses TCP and Telnet services to transfer bulk-data files between machines or hosts.

G

Gigabit Ethernet (GbE). An Ethernet network with a bandwidth of 1000-Mbps

H

hardware console. A service-call logical processor that is the communication feature between the main processor and the service processor.

Host Bus Adapter (HBA). An I/O controller that connects an external bus, such as a Fibre Channel, to the internal bus (channel subsystem).

In a Linux environment HBAs are normally virtual and are shown as an FCP device.

HMC. hardware management console. A console used to monitor and control hardware such as the z Systems microprocessors.

HFS. hierarchical file system. A system of arranging files into a tree structure of directories.

I

intraensemble data network (IEDN). A private 10 Gigabit Ethernet network for application data communications within an ensemble. Data communications for workloads can flow over the IEDN within and between nodes of an ensemble. All of the

physical and logical resources of the IEDN are configured, provisioned, and managed by the Unified Resource Manager.

intranode management network (INMN). A private 1000BASE-T Ethernet network operating at 1 Gbps that is required for the Unified Resource Manager to manage the resources within a single zEnterprise node. The INMN connects the Support Element (SE) to the zEnterprise 196 (z196) or zEnterprise 114 (z114) and to any attached zEnterprise BladeCenter Extension (zBX).

ioctl system call. Performs low-level input- and output-control operations and retrieves device status information. Typical operations include buffer manipulation and query of device mode or status.

IOCS. input / output channel subsystem. See channel subsystem.

IP. internet protocol. In the Internet suite of protocols, a connectionless protocol that routes data through a network or interconnected networks and acts as an intermediary between the higher protocol layers and the physical network.

IP address. The unique 32-bit address that specifies the location of each device or workstation on the Internet. For example, 9.67.97.103 is an IP address.

IPIP. IPv4 in IPv4 tunnel, used to transport IPv4 packets in other IPv4 packets.

IPL. initial program load (or boot).

- The initialization procedure that causes an operating system to commence operation.
- The process by which a configuration image is loaded into storage at the beginning of a work day or after a system malfunction.
- The process of loading system programs and preparing a system to run jobs.

IPv6. IP version 6. The next generation of the Internet Protocol.

IUCV. inter-user communication vehicle. A z/VM facility for passing data between virtual machines and z/VM components.

K

kernel. The part of an operating system that performs basic functions such as allocating hardware resources.

kernel module. A dynamically loadable part of the kernel, such as a device driver or a file system.

kernel image. The kernel when loaded into memory.

L

LCS. LAN channel station. A protocol used by OSA.

LDP. Linux Documentation Project. An attempt to provide a centralized location containing the source material for all open source Linux documentation. Includes user and reference guides, HOW TOs, and FAQs. The homepage of the Linux Documentation Project is

`www.linuxdocs.org`

Linux. a variant of UNIX which runs on a wide range of machines from wristwatches through personal and small business machines to enterprise systems.

Linux disk layout. A basic disk structure for Linux on z Systems. Now replaced by compatible disk layout.

Linux on z Systems. the port of Linux to the IBM z Systems architecture.

LPAR. logical partition of z Systems.

LVS (Linux virtual server). Network sprayer software used to dispatch, for example, http requests to a set of web servers to balance system load.

M

MAC. medium access control. In a LAN this is the sub-layer of the data link control layer that supports medium-dependent functions and uses the services of the physical layer to provide services to the logical link control (LLC) sub-layer. The MAC sub-layer includes the method of determining when a device has access to the transmission medium.

Mbps. million bits per second.

MIB (Management Information Base).

- A collection of objects that can be accessed by means of a network management protocol.
- A definition for management information that specifies the information available from a host or gateway and the operations allowed.

MTU. maximum transmission unit. The largest block which may be transmitted as a single unit.

Multicast. A protocol for the simultaneous distribution of data to a number of recipients, for example live video transmissions.

N

NIC. network interface card. The physical interface between the IBM mainframe and the network.

O

OSA-Express. Abbreviation for Open Systems Adapter-Express networking features. These include 10 Gigabit Ethernet, and Gigabit Ethernet.

OSM. OSA-Express for Unified Resource Manager. A CHPID type that provides connectivity to the intranode management network (INMN) from z196 or z114 to Unified Resource Manager functions. Uses OSA-Express3 1000BASE-T Ethernet exclusively operating at 1 Gbps.

OSPF. open shortest path first. A function used in route optimization in networks.

OSX. OSA-Express for zBX. A CHPID type that provides connectivity and access control to the intraensemble data network (IEDN) from z196 or z114 to zBX.

P

POR. power-on reset

POSIX. Portable Operating System Interface for Computer Environments. An IEEE operating system standard closely related to the UNIX system.

R

router. A device or process which allows messages to pass between different networks.

S

SE. support element.

- An internal control element of a processor that assists in many of the processor operational functions.
- A hardware unit that provides communications, monitoring, and diagnostic functions to a central processor complex.

SNA. systems network architecture. The IBM architecture that defines the logical structure, formats, protocols, and operational sequences for transmitting information units through, and controlling the configuration and operation of, networks. The layered structure of SNA allows the ultimate origins and destinations of information (the users) to be independent of and unaffected by the specific SNA network services and facilities that are used for information exchange.

SNMP (Simple Network Management Protocol). In the Internet suite of protocols, a network management protocol that is used to monitor routers and attached networks. SNMP is an application layer protocol. Information on devices managed is defined and stored in the application's Management Information Base (MIB).

Sysctl. system control programming manual control (frame). A means of dynamically changing certain Linux kernel parameters during operation.

T

TDEA. See Triple Data Encryption Standard.

TDES. See Triple Data Encryption Standard.

Telnet. A member of the Internet suite of protocols which provides a remote terminal connection service. It allows users of one host to log on to a remote host and interact as if they were using a terminal directly attached to that host.

Terminal. A physical or emulated device, associated with a keyboard and display device, capable of sending and receiving information.

Triple Data Encryption Standard. A block cipher algorithm that can be used to encrypt data transmitted between managed systems and the management server. Triple DES is a security enhancement of DES that employs three successive DES block operations.

U

UNIX. An operating system developed by Bell Laboratories that features multiprogramming in a multiuser environment. The UNIX operating system was originally developed for use on minicomputers but has been adapted for mainframes and microcomputers.

V

V=R. In z/VM, a guest whose real memory (virtual from a z/VM perspective) corresponds to the real memory of z/VM.

V=V. In z/VM, a guest whose real memory (virtual from a z/VM perspective) corresponds to virtual memory of z/VM.

Virtual LAN (VLAN). A group of devices on one ore more LANs that are configured (using management software) so that they can communicate as if they were attached to the same wire, when in fact they are located on a number of different LAN segments. Because VLANs are based on logical rather than physical connections, they are extremely flexible.

volume. A data carrier that is usually mounted and demounted as a unit, for example a tape cartridge or a

disk pack. If a storage unit has no demountable packs the volume is the portion available to a single read/write mechanism.

Z

z114. IBM zEnterprise 114

z13. IBM z13

z13s. IBM z13s.

z196. IBM zEnterprise 196

zBC12. IBM zEnterprise BC12.

zBX. IBM zEnterprise BladeCenter Extension

zEnterprise. IBM zEnterprise System. A heterogeneous hardware infrastructure that can consist of an IBM zEnterprise BC12, a zEnterprise EC12 (zEC12), a zEnterprise 114 (z114) or a zEnterprise 196 (z196) and an attached IBM zEnterprise BladeCenter Extension (zBX), managed as a single logical virtualized system by the Unified Resource Manager.

Index

Special characters

Numerics

A

B

C

D

E

F

G

H

I

J

K

L

M

N

O

P

Q

R

S

T

U

V

W

X

Y

Z

Readers' Comments — We'd Like to Hear from You

Linux on z Systems and LinuxONE
Device Drivers, Features, and Commands
on SUSE Linux Enterprise Server 12 SP3

Publication No. SC34-2745-04

We appreciate your comments about this publication. Please comment on specific errors or omissions, accuracy, organization, subject matter, or completeness of this book. The comments you send should pertain to only the information in this manual or product and the way in which the information is presented.

For technical questions and information about products and prices, please contact your IBM branch office, your IBM business partner, or your authorized remarketer.

When you send comments to IBM, you grant IBM a nonexclusive right to use or distribute your comments in any way it believes appropriate without incurring any obligation to you. IBM or any other organizations will only use the personal information that you supply to contact you about the issues that you state on this form.

Comments:

Thank you for your support.

Submit your comments using one of these channels:
- Send your comments to the address on the reverse side of this form.
- Send your comments via email to: eservdoc@de.ibm.com

If you would like a response from IBM, please fill in the following information:

Name	Address
Company or Organization	
Phone No.	Email address

Readers' Comments — We'd Like to Hear from You
SC34-2745-04

Cut or Fold
Along Line

Fold and Tape **Please do not staple** Fold and Tape

PLACE
POSTAGE
STAMP
HERE

IBM Deutschland Research & Development GmbH
Information Development
Department 3282
Schoenaicher Strasse 220
71032 Boeblingen
Germany

Fold and Tape **Please do not staple** Fold and Tape

SC34-2745-04

Cut or Fold
Along Line

SC34-2745-04