IBM CICS Performance Analyzer for z/OS

Report Reference

Version 3 Release 2

SC34-7154-01

IBM CICS Performance Analyzer for z/OS

Report Reference

Version 3 Release 2

SC34-7154-01

Note
Before using this information and the product it supports, read the information in "Notices" on page 381.

This edition applies to Version 3 Release 2 of IBM CICS Performance Analyzer for z/OS (product number 5655-U87) and to all subsequent releases and modifications until otherwise indicated in new editions.

This edition replaces SC34-7154-00. The technical changes for this edition are summarized under "Summary of changes" on page xi and are indicated by a vertical bar in the left margin.

Contents

About this book

This book contains information for IBM® CICS® Performance Analyzer for z/OS® Version 3 Release 2.

CICS Performance Analyzer for z/OS is a reporting tool for analyzing and tuning the performance of CICS systems. In this book, CICS Performance Analyzer for z/OS is referred to by its short name of CICS Performance Analyzer or CICS PA, and CICS Transaction Server is referred to as CICS.

This book describes the reports and extracts that can be requested, what they contain and how to use them. It also describes the System Management Facility (SMF) data that provides the input.

The following releases of CICS are supported:

640 CICS Transaction Server for z/OS Version 3 Release 1
650 CICS Transaction Server for z/OS Version 3 Release 2
660 CICS Transaction Server for z/OS Version 4 Release 1
670 CICS Transaction Server for z/OS Version 4 Release 2

Who should read this book

This book is intended for managers, database administrators, system programmers, and application programmers responsible for monitoring and improving the performance of CICS systems. It assumes that you understand basic CICS concepts and your installation's CICS systems. If you are new to MVS™, OS/390®, z/OS, DFSORT, or CICS, you might want to review the information in Bibliography before using this book and the CICS Performance Analyzer for z/OS.

Before you read this book, you need to have a good understanding of how CICS works. This assumes familiarity with many of the books in the CICS Transaction Server for z/OS library. You will also need to have a good understanding of the CICS Monitoring Facility (CMF), which is described in the *CICS Performance Guide.*

Conventions used in this book

This book uses the following conventions.

Highlighting conventions

This book uses the following highlighting conventions:

- **Boldface type** indicates dialog commands or user interface controls such as names of fields or menu choices.
- `Monospace type` indicates examples of text and batch commands that you enter exactly as shown.
- *Italic type* indicates variables that you should replace with a value. It is also used to indicate book titles and to emphasize significant words.

Command syntax notational conventions

The notational conventions used in this book to describe the syntax of CICS PA batch commands are as follows:

Use of symbols

The levels of nesting in the syntax are separated by parentheses. When you enter the commands, enter the following symbols exactly as they appear in the list:

, comma
- hyphen
= equals
. period
: colon
( ) parentheses

The following symbols are used to distinguish operands and command syntax. Do ***not*** enter them when you enter commands:

brackets [ ]
mean that you ***can*** select one of the operands, but they can be omitted. If the brackets are nested, the outermost operand (enclosed by one pair of brackets) is the highest level of nesting. That operand must be selected to select the next lower-level operand nested within it, and so forth.

underscore _____
denotes a default option. If you don't specify an operand, this is the operand the system selects.

vertical bar |
separates operand alternatives within brackets.

Use of case

Uppercase letters represent information that you must enter as shown. Some operands can be abbreviated. The letters that must be used are in uppercase. The subsequent letters in lowercase can be omitted. For example, you can enter the operand `CROSSsystem` either as a full word or abbreviated. The uppercase letters `CROSS` are the shortest truncation that CICS PA accepts.

Lowercase letters represent variable information that you supply, such as start time, owner, delimiter, DDname, and so on. For example, `OUTPUT(ddname)` shows that the OUTPUT operand requires a DDname parameter.

$ (the dollar symbol)

In the character sets given in this book, the dollar symbol ($) is used as a national currency symbol and is assumed to be assigned the EBCDIC code point X'5B'. In some countries a different currency symbol, for example the pound symbol (£), or the yen symbol (¥), is assigned the same EBCDIC code point. In these countries, the appropriate currency symbol should be used instead of the dollar symbol.

Terminology used in this book

In this book, CICS Performance Analyzer for z/OS is referred to by its short name of CICS Performance Analyzer or the abbreviation CICS PA, and CICS Transaction Server for z/OS is referred to as CICS TS.

CICS PA can produce various types of output, including reports (text or numeric data formatted for human readers), graphs (also for human readers), and extracts (data intended for use by other software applications). These outputs are often referred to collectively as “reports”.

Much of the terminology in this book is based on CICS terminology. See *CICS Transaction Server for OS/390: Glossary,* GC33-1705.

The following Web site consolidates in one convenient location several of the main glossaries created for IBM products, including the *Glossary of Computing Terms*:

http://www.ibm.com/ibm/terminology/

Service updates and support information

To find service updates and support information, including software FixPaks, PTFs, Frequently Asked Question (FAQs), technical notes, troubleshooting information, and downloads, see the following Web page:

www.ibm.com/cics/support

Where to find information

The CICS Library Web page provides current product documentation and IBM Redbooks® that you can view, print, and download. To locate publications with the most up-to-date information, see the following Web page:

www.ibm.com/cics/library

Accessibility

Accessibility features help a user who has a physical disability, such as restricted mobility or limited vision, to use software products successfully.

You can perform most tasks required to set up, run, and maintain your CICS system in one of these ways:

- using a 3270 emulator logged on to CICS
- using a 3270 emulator logged on to TSO
- using a 3270 emulator as an MVS system console

IBM Personal Communications provides 3270 emulation with accessibility features for people with disabilities. You can use this product to provide the accessibility features you need in your CICS system.

Summary of changes

Significant changes in this edition are summarized here, and marked by a vertical bar in the left margin.

June 2011: updates to V3.2

APAR PM30692 includes the following new features and changes:

Support for CICS Transaction Server V4.2
All CICS PA reports, HDB, and the ISPF dialog support CICS Transaction Server for z/OS (CICS TS) V4.2, which is known by CICS PA as CICS Version 670.

New Transaction Tracking List report and Summary report
CICS TS V4.2 introduces Previous Hop (PH) data to the CMF record. CICS PA provides a new Transaction Tracking List report and Transaction Tracking Summary report to exploit these fields and the originating transaction data fields that were introduced in CICS TS V3.2.

Two new CICS PA-specific fields are available for use in the new reports:

- OSLATNCY reports the latency since the start of the originating transaction.
- PHLATNCY reports the latency between the start times of the current transaction and the previous hop transaction.

Sample Statistics Alert definitions
Two new sample Alert Definitions, CTSSERVR and CTGSAMPL, are provided for use when defining statistics alerts. The two existing sample Alert Definitions KEYALERT and SAMPLES have been updated and renamed CTSKEY and CTSSAMPL.

New sample Report Forms
Eleven new sample Report Forms PHCSUM1 to PHPSUM4 are provided to help you analyze transaction flow using the new CMF Previous Hop data.

Run reports directly from a Report Form
New primary commands RUN and JCL enable you to run reports directly from a Report Form.

Support for generic APPLID in HDB definition
HDB definition now accepts masking in the APPLID field.

Support for DB2® 10 for z/OS
CICS PA now supports DB2 10 for z/OS.

Previous changes

This section outlines what was new and changed in previous editions.

December 2010: CICS PA V3.2

CICS Performance Analyzer for z/OS, V3.2 includes the following features and changes:

New CICS TS and CICS TG statistics data available through CICS Explorer®
In addition to the current Explorer Summary table, the CICS PA plug-in for

CICS Explorer can now source CICS Statistics and Statistics Alerts data. The additional data is made available through the following facilities:

- New fields in the HDB definition: Explorer, a flag to identify HDBs intended for the CICS PA plug-in, and Qualifier, used to associate related HDBs/DB2 tables.
- Use of a report set or the HDB Load dialog to load the required data into the associated HDBs and also to load the HDB updates into their associated DB2 tables.
- The manifest, which is a catalog of HDBs that are associated with a qualifier and for which the Explorer indicator is set.

Capture statistics alerts in HDB
Statistics Alert reporting enables you to report on the statistics that match specified conditions. CICS PA now supports specifying an alert definition in the statistics HDB definition. You select the required Statistics reports to be collected in this HDB. When a CICS TS or CICS TG alert report is activated to collect in this HDB, you can use a new line action called AO (Activate Alert-only collection) to collect only the reports that related to this Alert. "Alert only" reports are only collected if Alert is triggered.

You can collect records that trigger alert conditions in the CICS TS and CICS TG Alert reports, or restrict existing reports to only those records which triggered alert conditions, or you can do both. Where both the alert and the original report record are collected you can hyperlink between them by use of a PF key.

Output batch reports as Portable Document Format (PDF) files
You can use the new z/OS UNIX utility sysout2pdf that converts plain text batch reports generated by CICS Performance Analyzer for z/OS into Adobe Portable Document Format (PDF) files. You can write plug-in filters for sysout2pdf to manipulate the report contents, highlight text, or add PDF navigation features such as bookmarks. You can also use sysout2pdf to e-mail the PDF.

Documentation update: New CICS PA Getting Started Guide
The *Getting Started Guide*, SC34-7155-01, is a new publication intended to help new users to understand the main CICS PA concepts and to become productive with the ISPF dialog interface and generating CICS PA reports.

Support for CICS Transaction Gateway V8.0
CICS PA supports SMF 111 records generated by CICS Transaction Gateway for z/OS V8.0, which is known by CICS PA as CICS TG VRM 800.

Dropping support for CICS Transaction Server V2.2 and V2.3
CICS PA has dropped support for SMF records created by CICS TS V2.2 and V2.3. CICS PA V3.2 supports CICS TS V3.1 and later. Historical data from CICS TS V2.2 systems is still supported.

CICS PA V3.2 includes all new features that were introduced in CICS PA V3.1 through service updates. For details, see "Previous changes" on page xi.

April 2010: updates to V3.1 for Performance Alerts

APAR PM04580 introduces Performance Alerts in CICS Performance Analyzer for z/OS V3.1, and includes the following new features and changes:

Performance Alerts
Allow you to compare CICS transaction performance against user-defined

levels of acceptable performance. A Performance Alert Definition specifies a list of CICS resources to be monitored or managed, together with thresholds that benchmark expected levels of performance. The reports apply to CMF data only. You can report Performance Alerts in various ways:

- By Transaction. The Performance List report has been enhanced to list all transactions that have triggered one or more alerts. It can also be an alert-specific report by reporting only those transactions that generate an alert.
- By Transaction Summary. The Performance Summary report has been enhanced to provide the total or percentage of transactions that have triggered alerts.

Resource Definitions
Primary menu option 9 now invokes the Resource Definitions menu. It includes the two options previously available from the Application Grouping menu which allowed you to define Resource Lists and Application Groups. A third option has been added to allow you to define Performance Alerts.

Copy alert definitions
You can now copy definitions of Statistics Alerts and Performance Alerts to the same or another repository.

Report Forms
Report Forms have been enhanced to enable Performance Alert reporting while utilizing the flexibility of Forms. List and Summary Report Forms now allow the SEV function for alert reporting fields. Existing List Forms will be automatically upgraded next time you edit them to include the new Fn (Function) column required for the new alert SEV function. For SEV fields in the Summary Report Form, specify the alert severity level, INFO, WARNING or CRITICAL, and report type COUNT or PERCENT. In addition, the Summary Report Form supports the new ALERT field name to provide total counts or percentages of transactions for each alert severity for the summary key.

Report Sets
Performance List and Summary report and extract specifications have been enhanced to include predefined Performance Alerts to work together with, or instead of, Report Forms.

Also, you can request an interval-based Performance Summary report or extract to add or override the Form summary key fields without altering the underlying Report Form.

Sample JCL
Four new JCL members are provided in the CICS PA sample library, SCPASAMP. The new sample jobs are CPAPALST, CPAPASUM, CPAPAXTL, and CPAPAXTS to request a List or Summary report or extract using pre-defined Performance Alerts.

October 2009: updates to V3.1

Contains updates for the following new feature introduced by APAR PK95922:

Extract CICS statistics to CSV files directly from SMF files
You can now extract CICS statistics to delimited text files, such as comma-separated value (CSV) files, directly from SMF files. You can then use these files with other applications, such as PC-based spreadsheets, for

further processing. Previously, to extract statistics to delimited text files, you had to load the data from SMF files into a Statistics HDB, and then extract the data from the HDB.

To extract CICS statistics from SMF files, select Report Sets from the CICS PA ISPF dialog primary option menu, and then select the new Statistics option from the Extracts category. The subsequent Statistics Extract panels allow you to select the CICS statistics that you want to extract. These panels generate JCL containing the new CICSPA command operand EXTRACTSTATISTICS. For details, see "Statistics extract" on page 225

The corresponding extract for performance data, previously known as the Export Extract, has been renamed to Performance Data Extract (or simply Performance Extract), to better distinguish it from the new Statistics Extract. Similarly, Export in the Extracts category of a Report Set has been renamed to Performance. The CICSPA command operand EXPORT is still supported, but is now deprecated in favor of the new synonym EXTRACTPERFORMANCE.

August 2009: updates to V3.1

Contains updates for fixes and new features introduced by APAR PK90007:

New Distributed Program Link (DPL) Usage Summary and List reports
CICS TS V4.1 introduces new transaction resource class data fields for distributed program links (DPLs). CICS PA provides new DPL Usage Summary and List reports for these fields. For details, see Chapter 4, "Transaction Resource Usage reports," on page 113.

Transaction Resource Usage List report: now includes originating transactions
If the APPLID or the task number of a transaction, or both, do not match its originating transaction, then the Task Identification section of the Transaction Resource Usage List report contains a second line that describes the originating transaction. For details, see "Task identification" on page 127.

Record Selection extract: support for identity class data
CICS TS V4.1 introduces a new monitoring identity class data record (SMF 110 subtype 1, class 6). You can now use CICS PA to extract these records from an SMF file, optionally compress them, and then save them to another file for future processing.

Cross-System Work Extended report: support for unit-of-work post-processing Performance Selection Criteria
The LISTX operand of the CICSPA batch command now supports the SELUOW suboperand. This means that you can now select the units of work that you want to include in a Cross-System Work Extended report.

Previously, if you used the CICS PA ISPF dialog to request a Cross-System Work Extended report (by specifying a Cross-System Work report with a Report Form), then CICS PA ignored any Performance Selection Criteria unit-of-work post-processing that you might have specified. Similarly, if you wrote your own batch job to use the CICSPA LISTX operand to produce a Cross-System Work Extended report, CICS PA ignored the SELUOW suboperand.

RECCOUNT field: now available in Performance Selection Criteria, and as a sort field for LISTX
You can now use the field RECCOUNT (CICS field ID: PERRECNT

DFHCICS A131) in Performance Selection Criteria. You can also now use RECCOUNT as a sort field in the List Extended report.

May 2009: CICS PA V3.1

CICS Performance Analyzer for z/OS V3.1 includes the following features and changes:

Statistics alert reporting
Statistics alert reporting enables you to define conditions, in terms of CICS Transaction Server statistics or CICS Transaction Gateway statistics field values, that interest you. You can then use those conditions to report on statistics stored in SMF files or historical databases. For details, see "Statistics Alert reports" on page 133.

Support for CICS Transaction Server V4.1
All CICS PA reports, HDB, and the ISPF dialog support CICS Transaction Server for z/OS (CICS TS) V4.1, which is known by CICS PA as CICS Version 660.

Support for CICS Transaction Gateway V7.2
CICS PA support for CICS Transaction Gateway statistics (SMF type 111 records) has been enhanced to support CICS Transaction Gateway V7.2.

Dropping support for CICS TS V1.3 and V2.1
CICS PA has dropped support for SMF records created by CICS TS V1.3 and V2.1. CICS PA V3.1 supports CICS TS V2.2 and later.

CICS PA plug-in sample report forms and DB2 view definition
To create comma-separated value (CSV) files for use with the CICS PA plug-in for the CICS Explorer, use the sample summary report form EXPLORE3 (for CICS TS V3) or EXPLORE4 (for CICS TS V4). (EXPLORE3 was already included in CICS PA V2.1 via the PTF for APAR PK71846.)

To create a DB2 view for use with the CICS PA plug-in, use member CPAXPLRV of the CICS PA sample library (SCPASAMP).

HDB Register data set name on Control Data Sets panel
In addition to the other panels where you can specify this data set name, you can now specify the HDB Register data set name on the CICS PA Control Data Sets panel (CICS PA dialog option 0.3).

z/OS V1.10 users: apply fix for DFSORT APAR PK80962
Without this fix, DFSORT can produce system abend SA78-10 in CICS PA.

Terminology: "shared object lists" now "resource lists"
Shared object lists, previously also known as "HDB object lists", are now known as *resource lists*. Object lists, sometimes previously also known as "personal object lists", remain as object lists.

Part 1. Introduction to CICS PA

The chapter in this part introduces you to CICS Performance Analyzer for z/OS (CICS PA) concepts and facilities. It describes the reports and extracts that can be generated from Report Sets and the data that is used to produce them. It also introduces the Historical Database (HDB) facility which enables you to collect a history of CMF performance data, CICS and server statistics data, and CICS Transaction Gateway statistics data for reporting, DB2 export, and CSV extract. The dialog facilities for reporting statistics are also introduced.

Chapter 1. Introduction

This chapter provides a brief introduction to CICS PA. It describes the reports and extracts that you can request and the types of data they process. It also describes the fundamental concepts and facilities.

What is CICS PA?

CICS Performance Analyzer for z/OS (CICS PA) is a reporting tool that provides information on the performance of your CICS systems and applications, and helps you tune, manage, and plan your CICS systems effectively. CICS PA also provides a historical database facility to help you manage CICS statistics and performance data for your CICS transactions.

CICS PA is not an online monitoring tool. It produces reports and extracts using data normally collected by your system in MVS System Management Facility (SMF) data sets:

- CICS Monitoring Facility (CMF) performance class, exception class, and transaction resource class data in SMF 110 records
- CICS statistics and server statistics data in SMF 110 records
- CICS Transaction Gateway statistics data in SMF 111 records
- DB2 accounting data in SMF 101 records
- WebSphere® MQ accounting data in SMF 116 records
- System Logger data in SMF 88 records
- IBM Tivoli® OMEGAMON® XE for CICS on z/OS (OMEGAMON XE for CICS) data in SMF 112 records, containing transaction data for Adabas, CA-Datacom, CA-IDMS, and Supra database management systems

It is designed to complement the CICS-supplied utilities and sample programs such as DFH$MOLS, DFHSTUP, and DFH0STAT.

CICS PA can help:

- System Programmers to track overall CICS system performance and evaluate the results of their system tuning efforts
- Application Programmers to analyze the performance of their applications and the resources they use
- Database Administrators to analyze the usage and performance of database systems such as IMS™ and DB2
- MQ Administrators to analyze the usage and performance of their WebSphere MQ messaging systems
- Managers to ensure transactions are meeting their required Service Levels and measure trends to help plan future requirements and strategies

CICS PA reports all aspects of CICS system activity and resource usage, including:

- Transaction response time
- CICS system resource usage
- Cross-system performance, including multi-region operation (MRO) and advanced program-to-program communication (APPC)
- CICS Business Transaction Services (BTS)

- CICS Web support
- External subsystems, including DB2, IMS, and WebSphere MQ
- CICS transaction usage of database management systems that are monitored by OMEGAMON XE for CICS: Adabas, CA-Datacom, CA-IDMS, and Supra
- System Logger performance
- Exception events that cause performance degradation
- Transaction file and temporary storage usage

Data input

The primary data source for CICS PA is the data collected by the CICS Monitoring Facility. CMF data is written to the MVS System Management Facility (SMF) data set as SMF type 110 records, subtype 1.

There are three types, or "classes", of CMF data analyzed by CICS PA:

CMF Performance class data
Detailed transaction-level information, such as the processor and elapsed time for a transaction, or the time spent waiting for I/O.

CMF Exception class data
Information about exceptional conditions suffered by a transaction, such as queuing for file strings, or waiting for temporary storage. This data highlights possible problems in system operation.

CMF Transaction resource class data
Additional transaction-level information about individual resources accessed by a transaction. Currently, the transaction resource class covers file and temporary storage resources only.

Another major data source for CICS PA is:

CICS statistics and server statistics data
SMF type 110 records, subtypes 2, 3, 4, and 5.

CICS Transaction Gateway statistics
SMF type 111 records.

CICS PA also analyzes the following types of data:

DB2 accounting data
SMF type 101 records written by DB2 on behalf of CICS attached tasks.

WebSphere MQ accounting data
SMF type 116 records written by WebSphere MQ on behalf of CICS attached tasks.

System Logger data
SMF type 88 records written by the MVS System Logger on behalf of CICS Transaction Server journaling.

OMEGAMON XE for CICS data
SMF type 112 records written by OMEGAMON XE for CICS to log CICS transaction usage by the database management systems Adabas, CA-Datacom, CA-IDMS, and Supra.

The **CICS PA Historical Database** is a repository for CMF performance class data, CICS statistics and server statistics data, and CICS Transaction Gateway statistics data.

CICS PA reports and extracts

CICS PA provides an ISPF menu-driven dialog to help you request and submit your reports and extracts. The available reports and extracts are grouped by category and briefly described below.

- **Performance Reports**
  - List
  - List Extended
  - Summary
  - Totals
  - Wait Analysis
  - Transaction Profiling
  - Cross-System Work
  - Transaction Group
  - BTS
  - Workload Activity
  - Transaction Tracking List
  - Transaction Tracking Summary
- **Exception Reports**
  - List
  - Summary
- **Transaction Resource Usage Reports**
  - File Usage Summary
  - Temporary Storage Usage Summary
  - DPL Usage Summary
  - Transaction Resource Usage List
- **Statistics Reports**
  - Alert
- **Subsystem Reports**
  - DB2
  - WebSphere MQ
  - OMEGAMON
- **System Reports**
  - System Logger
- **Performance Graphs**
  - Transaction Rate
  - Transaction Response Time
- **Extracts**
  - Cross-System Work
  - Performance
  - Record Selection
  - HDB Load
  - System Logger
  - Statistics

The CICS PA dialog automatically generates the commands and JCL for batch report processing.

The commands are under the `//SYSIN DD` statement of the JCL and have the general format:

```
CICSPA operand[(suboperand)][,operand[(suboperand)],]...
```

A brief description of the report categories and the reports and extracts follows. For a detailed discussion, see Part 2, “Report Set reports and extracts”.

Performance reports

These reports are produced from CMF performance class data.

Performance List
Lists in detail the CMF performance class data, and supports performance alert reporting. For more information, see “Performance List report” on page 19.

Performance List Extended
Sorts and lists in detail the CMF performance class data. For more information, see “Performance List Extended report” on page 28.

Performance Summary
Summarizes the CMF performance class data, and supports performance alert reporting. For more information, see “Performance Summary report” on page 36.

Performance Totals
Provides totals and averages of the CMF performance class data. For more information, see “Performance Totals report” on page 48.

Wait Analysis
Summarizes transaction activity by wait time. For each Transaction ID (or other ordering options), the resources that cause this transaction to be suspended are shown in the order of most to least expensive. This report highlights the system resource bottlenecks that might be causing bad response time. More detailed analysis can then be performed, focusing on the problem resources identified. For more information, see “Wait Analysis report” on page 56.

Transaction Profiling
Compares two sets of CMF performance class data. For more information, see “Transaction Profiling report” on page 67.

Cross-System Work
A detailed listing of segments of work performed by the same or different CICS systems via transaction routing, function shipping, or distributed transaction processing on behalf of a single network unit-of-work ID. For more information, see “Cross-System Work report” on page 69. The format can be tailored to produce the Cross-System Work Extended report (see Figure 39 on page 74).

Transaction Group
A detailed listing of segments of work performed by the same or different CICS systems on behalf of a single transaction group ID. For more information, see “Transaction Group report” on page 76.

BTS (Business Transaction Services)
A detailed listing of the segments of work performed by the same or different CICS systems on behalf of a single CICS Business Transaction Services (BTS) process. For more information, see “BTS report” on page 84.

Workload Activity
Provides a transaction response time analysis by MVS Workload Manager (WLM) service and report class. This can be used in conjunction with the z/OS Resource Measurement Facility (RMF™) workload activity reports to understand from a CICS perspective how well your CICS transactions are meeting their response time goals. The Workload Activity List report is a cross-system report that correlates CMF performance class data from single or multiple CICS systems for each network unit-of-work. Importantly, this

report ties MRO and function shipping tasks to their originating task so that their impact on response time can be assessed. The Workload Activity Summary report summarizes response time by WLM service and report classes. For more information, see "Workload Activity report" on page 88.

Transaction Tracking List
The Transaction Tracking List report provides performance data for groups of related transactions. The report combines CMF records for each originating transaction and its subordinate (group) transactions. This allows monitoring and measurement of transaction performance from the perspective of transaction flow. For more information, see "Transaction Tracking List report" on page 96.

Transaction Tracking Summary
The Transaction Tracking Summary report provides performance data for groups of related transactions. The report combines CMF records for each originating transaction and its subordinate (group) transactions. The summarized data is presented on a single line for each transaction group. For more information, see "Transaction Tracking Summary report" on page 103.

Exception reports

These reports are produced from CMF exception class data.

Exception List
Lists in detail the CMF exception class data. For more information, see "Exception List report" on page 107.

Exception Summary
Summarizes the CMF exception class data. For more information, see "Exception Summary report" on page 111.

Transaction Resource Usage reports

These reports are produced from CMF performance class and transaction resource class data.

File Usage Summary
Provides two summaries of File usage:

- The Transaction File Usage Summary Report summarizes Transactions that use Files. The report consists of Transaction Identification and File Control statistics from the CMF Performance records. In addition, there is one sub-section for each File that this Transaction has used.
- The File Usage Summary Report summarizes File activity. For each File, it gives a breakdown of File usage by Transaction ID.

For more information, see "File Usage Summary report" on page 113.

Temporary Storage Usage Summary
Provides two summaries of Temporary Storage usage:

- The Transaction Temporary Storage Usage Summary report summarizes Temporary Storage usage by Transaction ID. For each Transaction ID, it gives Transaction and Temporary Storage statistics followed by a breakdown of Temporary Storage usage for each Temporary Storage queue used.
- The Temporary Storage Usage Summary report summarizes Temporary Storage activity. For each Temporary Storage queue, it gives a breakdown of Temporary Storage usage by Transaction ID.

For more information, see “Temporary Storage Usage Summary report” on page 117.

DPL Usage Summary
Provides two summaries of distributed program link (DPL) usage:

- The Transaction DPL Usage Summary report summarizes DPL usage by Transaction ID. For each Transaction ID, it gives Transaction and DPL statistics followed by a breakdown for each DPL used.
- The DPL Usage Summary report summarizes DPL activity. For each DPL, it gives a breakdown of DPL usage by Transaction ID.

For more information, see “Distributed Program Link Usage Summary report” on page 122.

Transaction Resource Usage List
Provides a list of all Transaction resource class records in the sequence that they appear in the SMF file. It gives Transaction information, detailing their individual Temporary Storage and File usage. This report processes only transaction resource class data, not performance class data. For more information, see “Transaction Resource Usage List report” on page 125.

Statistics reports

These reports are produced from CICS statistics data. There is only one type of report in this category:

Statistics Alert reports
Process CICS Transaction Server and CICS Transaction Gateway statistics records. Before producing a Statistics Alert report, you must use the CICS PA dialog to create a Statistics Alert definition. A Statistics Alert definition specifies conditions, in terms of statistics field values, that interest you. When you request a Statistics Alert report, you specify the Statistics Alert definition that you want to use. The report identifies any statistics in the input data that match the conditions in the definition. For more information, see “Statistics Alert reports” on page 133.

In addition to producing these reports as part of a Report Set, from data stored in SMF files, you can also produce these reports outside of a Report Set, from data stored in a Statistics HDB.

You can also view CICS statistics interactively, using the CICS PA dialog, and extract CICS statistics to delimited text files.

Subsystem reports

The Subsystem reports are produced from database subsystem accounting data stored in SMF files. (Note that the DB2 report also processes CMF performance class data whereas the WebSphere MQ and OMEGAMON reports do not.) The reports in this category are:

DB2
Correlates CICS CMF performance class (SMF 110) records and DB2 accounting (SMF 101) records by network unit-of-work to produce a consolidated and detailed view of DB2 usage by your CICS systems. The DB2 report enables you to view CICS and DB2 resource usage statistics together in a single report. The DB2 List report shows detailed information of DB2 activity for each transaction. The DB2 Summary reports summarize DB2 activity by transaction. For more information, see “DB2 report” on page 141.

WebSphere MQ

Processes WebSphere MQ accounting (SMF 116) records to provide comprehensive performance analysis and resource usage for your CICS transactions that use MQ.

The WebSphere MQ List report provides a trace of MQ accounting records, reporting the comprehensive performance contained in subtype 0, 1 and 2 records. The WebSphere MQ Summary report provides two summarized views of your MQ transactions:

- Summary by CICS Transaction ID, showing the MQ system and queue resources use
- Summary by WebSphere MQ Queue name, showing the Transactions they service and resources used

For more information, see "WebSphere MQ report" on page 160.

OMEGAMON

Processes OMEGAMON XE for CICS (SMF 112) records to produce a detailed view of how CICS transactions use the following types of database management system (DBMS):

Adabas
CA-Datacom
CA-IDMS
Supra

For each type of DBMS, you can request up to three reports:

- A List report, showing database usage for each transaction.
- A Transaction Summary report, showing database usage summarized by transaction ID.
- A Database Summary report, showing database usage summarized by database.

The information in each report varies depending on the type of DBMS, but typically includes elapsed times and counts for each of the methods that transactions use to access a database, such as read, write, add, update, and delete.

For more information, see "OMEGAMON reports" on page 179.

System reports

These reports are produced from system data stored in SMF files. Note that the System Logger report does not process CMF performance class data.

System Logger

Processes System Logger (SMF 88) records to provide information on the System Logger logstreams and coupling facility structures that are used by CICS Transaction Server for logging, recovery and backout operations. The report can assist with measuring the effects of tuning changes and identifying Logstream or Structure performance problems. The System Logger List report shows information on Logstream writes, deletes, and events, as well as Structure Alter events for each SMF recording interval. The System Logger Summary report summarizes Logstream and Structure statistics so you can measure Logger performance over a longer period of time. These reports, when used in conjunction with the CICS Logger reports produced from the standard CICS statistics reporting utilities, provide a comprehensive analysis of the logstream activity for all your CICS systems. For more information, see "System Logger report" on page 191.

Performance Graph reports

These are graphical-style reports produced from CMF performance class data. The graph reports can be useful as daily indicators of system activity, as well as for analyzing particular performance problem areas in your CICS system. The reports in this category are:

Transaction Rate
A set of two graphs illustrating the average response time and the number of transactions that completed in a specified time interval. For more information, see "Transaction Rate Graph report" on page 201.

Transaction Response Time
A set of two graphs illustrating the average and maximum response time, respectively, for all transactions that completed in a specified time interval. For more information, see "Transaction Response Time Graph report" on page 201.

Extracts

While the other categories produce reports and graphs intended for human readers, the extracts produce data sets intended for use by software applications, including CICS PA itself.

Cross-System Work
This data set is useful for cross-system analysis. CICS PA allows you to merge CMF performance class data from segments of work performed by the same or different CICS systems via transaction routing, function shipping, or distributed transaction processing on behalf of a single network unit-of-work ID. This Cross-System Work data set can be used as input to CICS PA Performance Reports such as the List, Summary, and Totals reports to monitor the total amount of resources used by a transaction within a single CICS system or across multiple CICS systems. For more information, see "Cross-System Work extract" on page 203.

Performance Data
This data set contains a selected subset of CMF performance class data, extracted and formatted as a delimited text file. This file can then be imported into DB2 databases or PC spreadsheet applications such as Lotus® 1-2-3® for further reporting and analysis. The extract records have a default format which includes all the clock fields, or the format can be tailored like the Performance List or Performance Summary reports. The extract supports performance alert reporting. For more information, see "Performance Data extract" on page 212.

Record Selection
This data set contains only the SMF record types that are of interest to you. You can extract any combination of the SMF record types supported by CICS PA. The extract file can then be used as input to CICS PA, allowing for more efficient reporting. For more information, see "Record Selection extract" on page 217.

HDB Load
The HDB Load is a facility that loads SMF data into a Historical Database (HDB). This same facility is available from Primary Menu option 5 Historical Database, where the full set of HDB reporting facilities is available. However, from Report Sets you have the advantages of batch JCL generation and multiple load requests supported in the one job. A Recap report containing processing statistics is always printed at the end of load processing. For more information, see "HDB Load" on page 221.

System Logger
This data set contains a selected subset of System Logger data, extracted and formatted as a delimited text file. This file can then be imported into DB2 databases or PC spreadsheet applications such as Lotus 1-2-3 for further reporting and analysis. For more information, see "System Logger report" on page 191.

Statistics
This data set contains CICS statistics, extracted and formatted as a delimited text file. This file can then be imported into DB2 databases or PC spreadsheet applications such as Lotus 1-2-3 for further reporting and analysis. The format of the extract records depends on the CICS statistics ID of the extracted data: each statistics ID defines its own set of fields. For more information, see "Statistics extract" on page 225.

CICS PA concepts

CICS PA is based on the following concepts which are reflected in the Primary Option Menu of the CICS PA dialog:

1. Personal System Definitions
2. Report Sets
3. Report Forms
4. Object Lists
5. Historical Database
6. Shared System Definitions
7. Statistics reporting
8. Transaction Profiling
9. Resource Definitions: Resource Lists, Application Groups, Performance Alert Definitions

The CICS PA dialog is an ISPF-based menu-driven dialog that helps you create, maintain and submit your report requests. It also helps you to specify your input data and tailor requests specific to your requirements without you having to understand the SMF data.

CICS PA Primary Option Menu

```
  File  Options  Help
-------------------------------------------------------------------------------
V3R2M0          CICS Performance Analyzer - Primary Option Menu
Option ===> ____________________________________________________________________

0  CICS PA Profile       Customize your CICS PA dialog profile
1  Personal Systems      Specify personal CICS Systems, SMF Files and Groups
2  Report Sets           Request and submit reports and extracts
3  Report Forms          Define Report Forms
4  Object Lists          Define Object Lists
5  Historical Database   Collect and process historical data
6  Shared Systems        Specify shared CICS Systems, SMF Files and Groups
7  Statistics            Report CICS Statistics
8  Profiling             Request Transaction Profiling
9  Resource Definitions  Define Resource Lists, Application Groups and Alerts
X  Exit                  Terminate CICS PA
```

Figure 1. CICS PA Primary Option Menu

The following steps introduce the primary menu options and explain briefly how to use the dialog to start reporting:

1. Define your CICS systems and their SMF files. When your CICS systems are defined, you can start reporting against them. You can automate this process by using the Take-Up facility. CICS PA extracts the relevant information about your CICS systems from your SMF files. If you define your own CMF user fields, then specify your MCT definition. The user fields can then be incorporated into your CICS PA reports.

   Related CICS systems, such as those systems that connect via IRC/MRO, ISC/APPC, or IPIC can be grouped together for reporting purposes. For example, assigning the CICS MRO systems (CICSPTOR, CICSPAOR, CICSPFOR, CICSPDOR) and DB2 subsystem (DB2P) to a Group allows you to report on these systems as a single entity. CICS PA reports can then show a complete end-to-end picture of your MRO transaction activity, incorporating detailed DB2 statistics derived from the DB2 accounting data of subsystem DB2P.

   You can use Personal System Definitions (option 1) or Shared System Definitions (option 6). Typically your personal definitions are maintained by you and used by you for reporting. They are saved in your Personal Profile Library (specified in option 0 CICS PA Profile). This contrasts with Shared System Definitions which are typically maintained by a central administrator and used by all users for reporting. They are saved in the HDB Register (specified in option 5 Historical Database).
2. Define Report Sets to build, submit, and save your report requests. A Report Set contains the set of reports and extracts that you wish to run in a single job. Simply select the ones you require and submit.

   Specify Selection Criteria to filter the input records to report only the information that you are interested in. For example, you can specify Selection Criteria to restrict reporting to:
   - A particular date/time range
   - A group of related Transaction IDs
   - Transaction response times that exceed your thresholds

   Run your Report Sets (or individual reports or extracts). The CICS PA dialog builds the JCL and commands to produce the reports and extracts. You can edit these jobs, or you can write your own jobs.
3. Define Report Forms to tailor the format and content of your reports and extracts. A simple to use editor allows you to design your own report by selecting the required CMF fields. Most CMF fields can be selected for reporting, and detailed explanations of each CMF field are available from the dialog. A comprehensive set of Sample Report Forms is provided to help you tailor your reports and extracts.
4. Define Object Lists to help you specify values for filtering and grouping objects such as transaction IDs and terminals. Object Lists are used when specifying Selection Criteria for reports and extracts.
5. Define and maintain Historical Databases (HDBs) as repositories of performance data. Generate reports against your HDBs or export HDB data to DB2 for further manipulation and analysis.
6. See option 1.
7. Report on statistics from eligible SMF files or HDBs, or create and maintain Statistics Alert definitions (required for Statistics Alert reports).
8. Request a Transaction Profiling report (you can also request this in a Report Set, using option 2).
9. Define Resource Definitions, including Resource Lists, Application Groups, and Performance Alerts.

CICS PA Profile

This facility allows you to customize your CICS PA user profile, which includes:

- CICS PA dialog settings such as the name of your Personal Profile Library (where personal system definitions are stored), your preferred date format, and the job card CICS PA is to use when generating JCL.
- The allocation attributes of data sets that might need to be created during Report Set processing. CICS PA uses these when generating JCL.
- Control data sets: the data sets to use for Report Sets, Report Forms, Object Lists, and the HDB Register.
- DB2 settings, for exporting data to DB2 tables.

You can bypass this menu option because CICS PA uses defaults and prompts you if and when further information is required.

System Definitions

Use System Definitions to define:

- CICS systems (including CICS Transaction Gateway systems) and SMF files that you want to report against
- DB2 subsystems and SMF files for the DB2 report and Record Selection extract
- MQ subsystems and SMF files for the WebSphere MQ report and Record Selection extract
- System Loggers and SMF files for the System Logger report and Record Selection extract

You can specify SMF data sets for each system (CICS, DB2, MQ, Logger) or for each MVS system (image) where they run. In addition you can define groups of systems for reporting purposes, such as those systems that connect via IRC/MRO, ISC/APPC, or IPIC.

Your System Definitions are then used in the following ways:

- By specifying the Systems (or Groups) in your Report Sets, CICS PA can determine the related files to include in Report Set JCL generation.
- By specifying a CICS APPLID when creating Report Forms and HDB Templates, CICS PA can determine the user fields and CICS version. CICS PA can then populate your Report Form or HDB Template with CMF fields appropriate to the release of CICS and user fields for the particular CICS system.
- By specifying a CICS APPLID for the Cross-System Work extract, CICS PA can determine the user fields for the particular CICS system for inclusion in the extract file.
- The SSID of specified DB2 Subsystems provides filtering on SSID for the DB2 report and Record Selection extract.
- The SSID of specified MQ Subsystems provides filtering on SSID for the WebSphere MQ report and Record Selection extract.

For reporting, you can use either Personal System Definitions (Primary Menu option 1) or Shared System Definitions (Primary Menu option 6), but not both at the same time. Set **Systems** in the action bar to the definitions that you want to use for report. Typically your personal definitions are maintained by you and used by you for reporting.

Personal Systems

Personal System Definitions are maintained using Primary Menu option 1. They are saved in your Personal Profile Library (specified in option 0 CICS PA Profile Settings). Typically your personal definitions are maintained by you and used by you for reporting.

The dialog provides a take-up facility to automatically define your personal systems from an SMF file.

Shared Systems

Shared System Definitions are maintained using Primary Menu option 6. They are saved in the HDB Register. Typically the shared definitions are maintained by a central administrator, but for reporting, they are used by all users of that register.

The dialog provides a take-up facility to automatically define your shared systems from an SMF file. The dialog provides a second take-up facility to automatically load your personal definitions into the Shared System Definitions.

Report Sets

A Report Set defines a selection of reports and extracts with their associated options. The CICS PA reports and extracts are listed in "CICS PA reports and extracts" on page 5.

You can define any number of Report Sets and select any number of reports and extracts in a Report Set. The reports in a Report Set are produced as a group from one pass of the input data sets.

A Report Set can be run on a one-off basis, or run repeatedly against different input each time. Changes are made to Report Sets using the CICS PA dialog, and immediately affect the next run of the Report Set.

The data to be analyzed by a Report Set can optionally be restricted by a Start/Stop date and time specified at submit time. This reduces the volume of data to be analyzed as only a subset of the data in the input files is passed to the report processors, thereby increasing the efficiency of the report processing.

Selection Criteria

Selection Criteria can be specified to provide filtering of the data to be reported or extracted. Selection Criteria are made up of a series of SELECT Statements which specify whether to include or exclude data based on:

- date-time ranges or time slots
- started, stopped, or continuing (active) transactions
- particular field values

You can filter on many fields, and specify value lists, masks or ranges. Object Lists are a convenient way to specify the values and define groups of objects such as transaction IDs and terminals.

Running Report Sets

The CICS PA dialog generates the JCL for batch report processing. The Report Set (or individual report or extract), and any Report Forms and Object Lists it uses, are converted to a stream of commands for batch execution. Eligible data sets specified in your System Selection are built into the JCL as input to the batch reporting programs.

Enter the **RUN** command to run your Report Set. This prompts you to check or change your run-time options before generating the JCL. Run-time options include System Selection, Report Interval, and whether you want to edit the JCL before submitting the job for batch execution.

Alternatives to the RUN command are JCL and SUB. These do the same as the RUN command except:

- The **JCL** command selects the run-time option Edit JCL before Submit. This allows you to review or modify the JCL before submit, or to save the JCL in an external library for later submission independent of the CICS PA dialog.
- The **SUBMIT** or **SUB** command does not select the run-time option Edit JCL before Submit. It requests that the job be submitted immediately.

Analyzing the output

View or print your reports using standard facilities such as SDSF or ISPF Outlist Utility.

Process your extract data sets according to their purpose:

- Analyze the Cross-System Work extract data using CICS PA Performance Reports such as the List, Summary, and Totals reports.
- Analyze the Performance Data Extract or System Logger Extract using external programs such as DB2, or PC tools such as Lotus 1-2-3.
- Specify the Record Selection extract data sets as your SMF Files in System Definitions to reduce the volume of data processed by CICS PA.

Report Forms

Report Forms can be used to tailor the format and content of the following reports and extracts:

Performance List report
Performance List Extended report
Performance Summary report
Cross-System Work report
Performance Data extract
Transaction Tracking List
Transaction Tracking Summary

One Report Form can be used by many reports of compatible type. The Report Form defines the CMF fields to include in the report, the order of the columns, sort sequence (where applicable), and report title. Optionally, your List or Summary Report Form can define which fields are for performance alert reporting. Alternatively, Performance Alert Definitions can be used for reporting together with, or instead of, a Report Form. Note that alerts are not supported in ListX Report Forms.

List and Summary Report Forms can also be used to tailor HDB reports.

You can run reports directly from a Report Form as well as using the Report Form in a Report Set.

Object Lists and Resource Lists

Object Lists provide a convenient way to specify field values for filtering the CMF data and grouping objects for reporting purposes. For example, to analyze the resource usage of a particular group of transactions.

An Object List defines particular values, masks, or ranges of values which can be used in the Selection Criteria for as many reports and extracts as required. Long lists of field values need only be defined once and reused in Report Sets as often as desired.

Resource Lists offer similar benefits for specifying field values in HDB load selection criteria, and Resource field values in Application Grouping and Statistics Alerts.

Historical Database

Historical Database (HDB) is a facility that allows you to manage performance and statistics data for your CICS transactions. SMF data is saved in HDB container data sets that are managed from the CICS PA dialog.

There are three types of HDB:

Performance List HDB
A List HDB is built from CMF performance class data. In a List HDB data set, one record represents one transaction. Typically, List HDBs are used to analyze recent transaction events. Data is usually only required for a short period of time. The type of information and level of detail contained in a List HDB is determined by the List Template on which it is based.

Performance Summary HDB
A Summary HDB is built from CMF performance class data. In a Summary HDB data set, one record represents a summary of transaction activity over a user-specified time interval. Typically, Summary HDBs are used for long-term trend analysis and capacity planning. Data is retained for a longer period of time, sometimes years. The type of information and level of detail contained in a Summary HDB is determined by the Summary Template on which it is based.

Statistics HDB
A Statistics HDB contains collections of CICS statistics and server statistics and CICS Transaction Gateway statistics over a specified time interval.

You can run reports against your HDB, export the HDB data to DB2 tables, or export the HDB data to extract data sets in CSV format.

Statistics reporting

CICS PA provides comprehensive reporting and analysis of CICS statistics and server statistics data. It complements the CICS statistics reporting utilities DFHSTUP and DFH0STAT. CICS PA also provides comprehensive reporting and analysis of statistics data from CICS Transaction Gateway. CICS PA can interactively process, report, and extract statistics data directly from SMF files or from an HDB after collection. An advantage of collecting statistics data in an HDB is that you can then export the data to DB2 for further analysis.

Features of the interactive statistics reporting facility include:
- Tabular reporting, sorting by field (column)
- Forms to design personalized reports
- Hyperlinks to jump directly to related reports
- Print facility, either to a data set or to SYSOUT

In addition to interactively reporting statistics, you can also process statistics using the batch Statistics Alert reports, and extract statistics to delimited text files.

Part 2. Report Set reports and extracts

These topics provide a detailed description of each of the CICS PA Report Set reports and extracts, their content and sample output. The reports and extracts are discussed in the order in which they are presented in the Report Set panel in the CICS PA dialog.

The batch commands and options to tailor the reports and extracts are also briefly described. You can set up your own JCL or use the CICS PA dialog to automatically generate your Report Set requests. For more information on using the CICS PA dialog, see the *CICS PA User's Guide.*

Chapter 2. Performance reports

The Performance reports are produced from CMF performance class data. The reports in this category are:

Performance List report

The Performance List report provides a detailed list of the CMF performance class records.

You can request a list of all available records, or specify selection criteria to list only the information that meets specific requirements.

Report command

The Performance List report can be requested from a Report Set in the CICS PA dialog. Select the **List** report in the **Performance Reports** category.

In batch, the `LIST` command is used to request the Performance List report.

Performance List report

The command to produce the default report is:

```
CICSPA LIST
```

To tailor the report, you can specify report options as follows:

```
CICSPA LIST(
          [OUTPUT(ddname),]
          [ALERTDEF(defname),]
          [SEVERITY(CRITICAL|WARNING|INFO|ELIGIBILE|ALL),]
          [FIELDS(field1[(options)],...),]
          [LINECount(nnn),]
          [TITLE1('...sub-heading left...'),]
          [TITLE2('...sub-heading right...'),]
          [SELECT(PERFORMANCE(INCLUDE|EXCLUDE(field1(values1),...),...)),]
          [SELECT2(PERFORMANCE(INCLUDE|EXCLUDE(field1(values1),...),...))])
```

The CICS PA dialog generates the FIELDS operand when a Report Form is specified. This controls the format of the report by specifying the desired fields, their format, and the order of the columns.

For Performance Alert reporting, ALERTDEF specifies the name of the Performance Alert Definition. SEVERITY specifies which of the following to report:

- Critical alerts according to the CRITICAL threshold values in the Performance Alert Definition

- Critical and Warning alerts according to the WARNING threshold values in the Performance Alert Definition
- Critical, Warning, and Informational alerts according to the INFO threshold values in the Performance Alert Definition
- Only those transactions that match the resource criteria in the Performance Alert Definition
- All transactions

If the FIELDS operand is not specified, the default is:

```
CICSPA LIST(FIELDS(TRAN,              Transaction ID
                   STYPE,             Start type of transaction
                   TERM,              Terminal ID
                   USERID,            User ID
                   RSYSID,            Remote System ID
                   PROGRAM,           Initial program name
                   TASKNO,            Transaction number
                   STOP(TIMET),       Stop time (hh:mm:ss.thm)
                   RESPONSE,          Response time
                   DISPATCH(TIME),    Dispatch time (sss.thmi)
                   CPU(TIME),         CPU time
                   SUSPEND(TIME),     Suspend time
                   DISPWAIT(TIME),    Dispatch wait time
                   FCWAIT(TIME),      File Control I/O wait time
                   FCAMCT,            File Control access method calls
                   IRWAIT(TIME)))     Inter-Region (MRO) I/O wait time
```

Performance List Extract

The LIST command can be used to tailor the format of the Performance Data Extract file.

The command format for the Performance List Extract is:

```
CICSPA LIST(
          [OUTPUT(ddname),]
          [DDNAME(ddname),]
          [DELIMIT('field-delimiter'),]
          [LABELS|NOLABELS,]
          [FLOAT,]
          [ALERTDEF(defname),]
          [SEVERITY(CRITICAL|WARNING|INFO|ELIGIBILE|ALL),]
          [FIELDS(field1[(options)],...),]
          [TITLE1('...1st 64 characters of title...'),]
          [TITLE2('...2nd 64 characters of title...'),]
          [SELECT(PERFORMANCE(INCLUDE|EXCLUDE(field1(values1),...),...)),]
          [SELECT2(PERFORMANCE(INCLUDE|EXCLUDE(field1(values1),...),...))])
```

See Figure 86 on page 214 for an example of the Performance List Extract file.

Report content

You can specify a LIST Report Form (FIELDS operand) to tailor the format and content of the Performance List report. If a Report Form is not specified, the default format of the report is produced.

Default format

A report line is printed for each performance class record in the input file. The data is listed in the same order (time sequence) as it was written to SMF.

The following report is an example of the default Performance List report.

```
 V3R2M0                                          CICS Performance Analyzer
                                                     Performance List

LIST0001 Printed at 12:03:45  3/15/2011    Data from 11:10:51  3/24/2010                    APPLID CICSPA1           Page   1

 Tran SC Term Userid RSID Program  TaskNo Stop         Response Dispatch User CPU  Suspend DispWait  FC Wait   FCAMRq  IR Wait
                                          Time           Time     Time     Time     Time     Time     Time                Time
 CSSY U       CBAKER      DFHAPATT     13 11:10:52.256    .6743    .0728    .0134    .6015    .4000    .0000        0    .0000
 CSSY U       CBAKER      DFHAPATT     10 11:10:52.289    .7498    .1910    .0228    .5588    .1997    .0000        0    .0000
 CSSY U       CBAKER      DFHAPATT     14 11:10:53.132   1.3344    .3202    .0378   1.0142    .2626    .0000        1    .0000
 CSSY U       CBAKER      DFHAPATT     11 11:10:53.341   1.4292    .1497    .0313   1.2794    .3461    .0000        0    .0000
 CPLT U       CBAKER      DFHSIPLT      7 11:11:07.123  15.9915    .3383    .0369  15.6532    .0155    .0000        0    .0000
 CSSY U       CBAKER      DFHAPATT    III 11:11:07.345  16.0761   9.3488   2.3435   6.7273   1.1645    .9522     2059    .0000
 CWBG S       CBAKER      DFHWBGB      24 11:11:08.123    .0262    .0248    .0041    .0013    .0012    .0000        0    .0000
 CRSQ S       CBAKER      DFHCRQ       25 11:11:08.234    .0818    .0449    .0040    .0369    .0367    .0000        0    .0000
 CXRE S       CBAKER      DFHZXRE      27 11:11:09.345    .2255    .0243    .0049    .2011    .2009    .0000        0    .0000
 CLR2 TO R11  CBAKER      DFHLUP       29 11:11:10.456    .0263    .0030    .0020    .0232    .0000    .0000        0    .0232
 CSFU S       CBAKER      DFHFCU       26 11:11:10.567   1.6968   1.5899    .1136    .1069    .0294    .0000        0    .0000
 CSAC TO SAMA CBAKER      DFHACP       31 11:11:13.678    .5217    .0028    .0011    .5189    .0002    .0000        0    .0000
 CLQ2 U       CBAKER      DFHLUP       28 11:11:13.789   3.8259    .0818    .0068   3.7441    .0035    .0000        0   3.7344
 CEMT TO SAMA CBAKER      DFHEMTP      32 11:11:13.890    .1877    .1842    .0264    .0035    .0030    .0000        0    .0000
 CEMT TO SAMA CBAKER      DFHEMTP      33 11:11:14.801    .0091    .0068    .0026    .0023    .0001    .0000        0    .0000
 CEMT TO SAMA CBAKER      DFHEMTP      34 11:11:15.912    .0092    .0068    .0025    .0024    .0000    .0000        0    .0000
 CSAC TO SAMA CBAKER      DFHACP       35 11:11:16.023    .5109    .0042    .0012    .5067    .0001    .0000        0    .0000
 CSAC TO SAMA CBAKER      DFHACP       36 11:11:17.120    .5150    .0011    .0011    .5139    .0001    .0000        0    .0000
 CSTE U       CBAKER      DFHTACP      37 11:11:17.231    .1420    .1381    .0126    .0039    .0037    .0000        0    .0000
 CATA U       CBAKER      DFHZATA      38 11:11:27.342    .0537    .0394    .0121    .0143    .0003    .0000        0    .0000
 CQRY S  S208 CBAKER      DFHQRY       39 11:11:28.453    .3476    .0451    .0048    .3025    .0038    .0000        0    .0000
 CQRY S  S208 CBAKER      DFHQRY       39 11:11:28.564    .4147    .0012    .0008    .4136    .0000    .0000        0    .0000
 CESN S  S208 CBAKER      DFHSNP       40 11:11:28.675    .0806    .0770    .0102    .0036    .0036    .0000        0    .0000
 CATA U       CBAKER      DFHZATA      41 11:11:28.786    .0309    .0048    .0045    .0261    .0003    .0000        0    .0000
 CQRY S  S23D CBAKER      DFHQRY       42 11:11:29.897    .2951    .0013    .0008    .2938    .0000    .0000        0    .0000
 CQRY S  S23D CBAKER      DFHQRY       42 11:11:29.908    .4037    .0012    .0008    .4024    .0000    .0000        0    .0000
 CESN S  S23D CBAKER      DFHSNP       43 11:11:29.099    .0030    .0029    .0020    .0001    .0000    .0000        0    .0000
 CESN TP S208 CBAKER      DFHSNP       44 11:11:35.110    .0284    .0280    .0147    .0004    .0003    .0000        0    .0000
 CESN TP S23D CBAKER      DFHSNP       45 11:11:41.221    .0203    .0197    .0114    .0006    .0006    .0000        0    .0000
```

Figure 2. Performance List report: default format

For the complete list of performance class data fields that can be selected for the Performance List report, see the *CICS Performance Analyzer for z/OS User's Guide.*

A brief description of the fields in the default report follows. For more details, see "CMF performance class data fields" on page 263.

Tran
The Transaction ID (field: TRAN, owner: DFHTASK, field ID: 001) identifies the name of the transaction that this performance class record represents. Applications that are using Distributed Program Link (DPL) requests should use the TRANSID('xxxx') parameter on the EXEC CICS LINK PROGRAM('xxxxxxxx') command to enable better transaction/application analysis from the monitoring performance class data. If the TRANSID('xxxx') parameter is not specified, all the performance class records on the target system for a Distributed Program Link (DPL) mirror transaction will have the same transaction ID. For example, 'CSMI' for a Distributed Program Link (DPL) request from another connected CICS system.

SC The transaction start type (field: STYPE, owner: DFHTASK, field ID: 004). The high-order bytes (0 and 1) are set to:

- **TO** Attached from terminal input
- **S** Attached by automatic transaction initiation (ATI) without data
- **SD** Attached by automatic transaction initiation (ATI) with data
- **QD** Attached by transient data trigger level
- **U** Attached by user request
- **TP** Attached from terminal TCTTE transaction ID
- **SZ** Attached by Front End Programming Interface (FEPI).

Term
The Terminal ID (field: TERM, owner: DFHTERM, field ID: 002) is either the terminal ID or the session ID. This field is blank if the transaction was not associated with a terminal or session facility.

Userid
The User identifier of the transaction (field: USERID, owner: DFHCICS, field ID: 089).

RSID
The Transaction Routing Sysid (field: RSYSID, owner: DFHCICS, field ID: 130) can be used to identify the connection name (sysid) of the remote system to which the transaction was routed. If the transaction was not routed, this field is blank and the initial program name **Program** field will identify the initial application program name invoked for the transaction.

Program
The Program Name (field: PGMNAME, owner: DFHPROG, field ID: 071) identifies the initial application program invoked for the transaction. Depending on the type of transaction, this field contains either the application program name as defined in the transaction definition, the program name returned by a user written dynamic routing program, the application program name passed on a function shipped Dynamic Program Link (DPL) request, the initial application program name of an ONC RPC Alias Transaction, or the initial application program name of a WEB Alias Transaction. A program name of ######## indicates that the transaction was invoked using the definition of the transaction ID specified by the DTRTRAN system initialization parameter.

TaskNo
The transaction identification number (owner: DFHTASK, field ID: 031). Normally numeric, but some CICS system tasks are identified by special characters in this field:
III system initialization task
TCP terminal control task

Stop Time
The transaction stop time (owner: DFHCICS, field ID: 005).

Response Time
The transaction response time. This field is calculated by subtracting the transaction start time (owner: DFHCICS, field ID: 005) from the transaction stop time (owner: DFHCICS, field ID: 006).

Dispatch Time
The transaction dispatch time (owner: DFHTASK, field ID: 007).

User CPU Time
The transaction CPU time (owner: DFHTASK, field ID: 008).

Suspend Time
The transaction suspend time (owner: DFHTASK, field ID: 014).

DispWait Time
The transaction dispatch wait time (owner: DFHTASK, field ID: 102).

FC WAIT Time
The transaction file control I/O wait time (owner: DFHFILE, field ID: 063).

FCAMRq
The number of file control access method calls (field: FCAMCT, owner: DFHFILE, field ID: 070).

IR Wait Time
The transaction inter-region (MRO) I/O wait time (field: IRIOWTT, owner: DFHTERM, field ID: 100).

Note: Some of the fields that contain large values might be represented in exponential format. For example, 2 834 000 might be shown as 2834E3.

Tailored format

You can tailor the Performance List report to include any CMF performance class field. From the CICS PA dialog, you can design a LIST Report Form to include the required fields in your report. Sample Report Forms are available to help you tailor your report for a specific purpose.

In batch the `FIELDS` operand of the `LIST` report command is used to specify the required report fields.

Example: DBCTL: Sample Report Forms are provided to help you format a List report to show DBCTL transaction activity:

IMSDBLST
: Transaction DBCTL Usage Analysis

IMSRQLST
: Transaction DBCTL Req Analysis

You can edit the sample forms to tailor your reports. Alternatively, you can create a new Report Form, select to specify Field Categories, and select DBCTL to populate the form with DBCTL fields.

```
                         Select Field Categories
Command ===> ____________________________________________________

CMF Groups:
/  DFHAPPL - Application naming     /  DFHJOUR - Journal
/  DFHBTS  - BTS                    /  DFHMAPP - BMS Maps
/  DFHCHNL - CHANNEL option         /  DFHPROG - Program Control
/  DFHCICS - CICS task information  /  DFHRMI  - Resource Manager (RMI)
/  DFHDATA - Data processing        /  DFHSOCK - Secure Sockets
/  DFHDEST - Transient Data         /  DFHSTOR - Storage Control
/  DFHDOCH - Document Handler       /  DFHSYNC - Syncpoint processing
/  DFHEJBS - EJB Server             /  DFHTASK - Task Control
/  DFHFEPI - Front End (FEPI)       /  DFHTEMP - Temporary Storage
/  DFHFILE - File Control           /  DFHTERM - Terminal Control
_                                   /  DFHWEBB - Web Interface
Region Types:
_  AOR     - Application-owning     User Fields:
_  FOR     - File-owning            /  DBCTL   - IMS DBCTL
_  TOR     - Terminal-owning        _  CROSSYS - Cross-System
_  DB2     - AOR with DB2           _  OMCICS  - OMEGAMON
```

Figure 3. New Report Form - Select Field Categories: DBCTL

Move the fields of interest above EOR to include them in the report.

```
                    EDIT LIST Report Form - DBCTLIST

    Field                                                  - User Field -
    Name        Type       Length  Dictionary Definition  Offset  Length
__  TRAN____    _______         4  TRAN     DFHTASK C001   ___     ___
__  PSBNAME_    _______         8  PSBNAME  DBCTL   C001   ___     ___
__  START___    TIMET__        12  START    DFHCICS T005   ___     ___
__  RESPONSE    _______         8  RESP     CICSPA  D901   ___     ___
__  CPU_____    TIME___         8  USRCPUT  DFHTASK S008   ___     ___
__  DISPATCH    TIME___         8  USRDISPT DFHTASK S007   ___     ___
__  SUSPEND_    TIME___         8  SUSPTIME DFHTASK S014   ___     ___
__  POOLWAIT    _______         8  POOLWAIT DBCTL   A002   ___     ___
__  INTCWAIT    _______         8  INTCWAIT DBCTL   A003   ___     ___
__  SCHTELAP    _______         8  SCHTELAP DBCTL   A004   ___     ___
__  DBIOELAP    _______         8  DBIOELAP DBCTL   A005   ___     ___
__  PILOCKEL    _______         8  PILOCKEL DBCTL   A006   ___     ___
__  DBIOCALL    _______         8  DBIOCALL DBCTL   A007   ___     ___
__  DLICALLS    _______         8  DLICALLS DBCTL   A017   ___     ___
__  EOR_____    _______                                    ___     ___
__  EOX_____    _______                                    ___     ___
```

Figure 4. LIST Report Form: DBCTL fields

This will produce a report with the following format.

```
 V3R2M0                                          CICS Performance Analyzer
                                                    Performance List

LIST0001 Printed at 12:03:45  3/15/2011    Data from 15:58:48  2/19/2010                        APPLID CICPAOR1      Page       1
DBCTL transactions

 Tran PSB      Start        Response User CPU Dispatch  Suspend PoolWait   ICwait SchedElp DBIOElap PILockEl DBIOcall DLIcalls
               Time           Time     Time     Time     Time     Time     Time     Time     Time     Time
 DLI0 DDLPSB51 15:58:47.251   1.0479    .0483    .9427    .1052    .0000    .0000    .0079    .0000    .0000        0        0
 DLI0 DDLPSB51 15:58:49.634    .0615    .0118    .0168    .0447    .0000    .0000    .0034    .0000    .0000        0        0
 DLI0 DDLPSB51 16:51:16.979   1.4467    .0474   1.2820    .1648    .0000    .0000    .0080    .0000    .0000        0        0
 DLI0 DDLPSB51 16:58:03.662    .0934    .0114    .0176    .0758    .0000    .0000    .0034    .0000    .0000        0        0
 DLI0 DDLPSB51 16:58:04.244    .0933    .0114    .0161    .0772    .0000    .0000    .0035    .0000    .0000        0        0
 DLI2 DDLPSB51 17:00:16.874   3.0710    .0110    .1065   2.9644    .0000    .0000    .0034    .0000    .0000        0        0
 DLI7 DDLPSB51 17:00:17.180   3.0274    .0116    .1441   2.8833    .0000    .0000    .0245    .0000    .0000        0        0
 DLI3 DDLPSB51 17:00:17.212   3.2297    .0129    .0108   3.2189    .0000    .0000    .0056    .0000    .0000        0        0
 DLI4 DDLPSB51 17:00:17.213   3.7488    .0109    .0112   3.7375    .0000    .0000    .0036    .0000    .0000        0        0
 DLI9 DDLPSB51 17:00:17.217  18.7260    .0108   2.8553  15.8707    .0000    .0000    .0034    .0000    .0000        0        0
 DLI1 DDLPSB51 17:00:17.218  18.8168    .0131    .0227  18.7941    .0000    .0000    .0041    .0000    .0000        0        0
 DLI0 DDLPSB51 17:00:17.217  18.9042    .0130   2.7601  16.1441    .0000    .0000    .0034    .0000    .0000        0        0
  . . .
 DLI0 DDLPSB51 13:14:14.187    .5046    .0439    .1369    .3676    .0000    .0000    .0035    .0000    .0000        0        0
 DLI0 PSB99    13:01:22.918   5.9288   2.1340   3.8341   2.0947    .0000    .0000   1.0004    .0000    .0000        0        2
 DLI0 PSB99    13:17:35.232   3.5302   2.1659   2.7387    .7914    .0000    .0000    .0010    .0000    .0000        0        2
 DLI0 PSB99    13:45:38.833   3.4382   2.1744   2.4742    .9640    .0000    .0000    .0010    .0000    .0000        0        2
 DLI0 PSB99    13:48:16.354   1.0711    .0428    .2282    .8429    .0000    .0000    .0024    .0000    .0000        0        1
 DLI0 PSB99    13:48:24.131    .2516    .0118    .0184    .2332    .0000    .0000    .0010    .0000    .0000        0        1
 DLI0 PSB99    13:48:25.012    .3658    .0117    .0168    .3490    .0000    .0000    .0011    .0000    .0000        0        1
 DLI0 PSB99    13:48:25.963    .3745    .0118    .0174    .3571    .0000    .0000    .0010    .0000    .0000        0        1
 DLI0 PSB99    13:48:26.919    .2871    .0116    .0180    .2691    .0000    .0000    .0010    .0000    .0000        0        1
 DLI0 PSB99    13:48:27.907    .2511    .0117    .0170    .2341    .0000    .0000    .0010    .0000    .0000        0        1
 DLI0 PSB99    15:36:20.458    .7925    .0451    .2664    .5261    .0000    .0000    .0010    .0000    .0000        0        1
 DLI0 PSB99    15:38:29.047    .6985    .0466    .1953    .5032    .0000    .0000    .0011    .0000    .0000        0        2
 DLI0 PSB99    15:38:50.508    .5742    .0457    .1260    .4482    .0000    .0000    .0010    .0000    .0000        0        2
 DLI0 PSB99    15:49:07.072    .9596    .0486    .1879    .7717    .0000    .0000    .0010    .0000    .0000        0        2
 DLI2 PSB99    15:53:29.716  91.8213   1.8717   2.0128  89.8085    .0000    .0000    .0010    .0000    .0000        0        1
 DLI3 PSB99    15:53:30.402  156.501   1.9866  24.4980  132.003    .0000    .0000    .0055    .0000    .0000        0        1
 DLI5 PSB99    15:53:30.497  233.355   1.9771  18.1590  215.196    .0000    .0000    .0049    .0000    .0000        0        1
 DLI1 PSB99    15:56:53.478  95.2870   1.9511  16.4508  78.8363    .0000    .0000    .0050    .0000    .0000        0        1
```

Figure 5. Performance List report: DBCTL transactions

Note: IMS Performance Analyzer (IMS PA) can provide a more comprehensive analysis of IMS DBCTL performance.

Example: Application naming: An example of a Performance List report produced from CMF performance class data with application naming enabled is shown in Figure 6 on page 25.

The commands to request this report are like the following:

```
CICSPA IN(SMFIN002),
       LIST(FIELDS(
              APPLTRAN,          Application naming transaction ID
```

```
                    USERID,             User identifier
                    APPLPROG,           Application naming program name
                    TASKNO,             Transaction identification number
                    STOP(TIMET),        Task stop time (hh:mm:ss.thm)
                    DISPATCH(TIME),     Dispatch time
                    CPU(TIME),          CPU time
                    SUSPEND(TIME),      Suspend time
                    DISPWAIT(TIME),     Redispatch wait time
                    APPLID,             CICS Generic APPLID
                    JOBNAME,            Job name
                    MVSID,              MVS SMF ID
                    RELEASE))           CICS release
```

```
 V3R2M0                                          CICS Performance Analyzer
                                                     Performance List

LIST0001 Printed at 12:03:45  3/15/2011    Data from 07:30:47  5/29/2010                                          Page   1

 Tran Userid   Program    TaskNo  Stop        Dispatch User CPU  Suspend DispWait APPLID   Jobname  MVS  Rlse
                                  Time          Time     Time     Time     Time
 TOP1 CBAKER   PROGOPT1       16  7:30:47.653    .0002    .0002    .0029    .0000 IYK2Z1V1 CI07CJB1 MV2C 0660
 TOP2 CBAKER   PROGOPT2       17  7:30:47.660    .0019    .0007    .0067    .0000 IYK2Z1V1 CI07CJB1 MV2C 0660
 TOP3 CBAKER   PROGOPT3       18  7:30:47.699    .0112    .0011    .0362    .0298 IYK2Z1V1 CI07CJB1 MV2C 0660
 TOP4 CBAKER   PROGOPT4       13  7:30:47.785    .0189    .0031    .1189    .1157 IYK2Z1V1 CI07CJB1 MV2C 0660
 TOP5 CBAKER   PROGOPT5       15  7:30:47.829    .0261    .0044    .1539    .1053 IYK2Z1V1 CI07CJB1 MV2C 0660
 TOP6 CBAKER   PROGOPT6       12  7:30:47.842    .0363    .0034    .1587    .0012 IYK2Z1V1 CI07CJB1 MV2C 0660
 TOP7 CBAKER   PROGOPT7       10  7:30:47.945    .1053    .0142    .1930    .1393 IYK2Z1V1 CI07CJB1 MV2C 0660
```

Figure 6. Performance List report: Application naming

Note: The APPLTRAN and APPLPROG fields are only available when application programs invoke the application naming event monitoring points. For more information, see the APPLNAME parameter on the DFHMCT TYPE=INITIAL macro in the *CICS Customization Guide.*.

Example: Precision(4) and conversion of numeric fields: Figure 7 on page 26 shows an example of a Performance List report with precision to 4 decimal places for clock fields and conversion of count and storage fields to K, M, KB, MB.

The commands to request this report are like the following:

```
CICSPA IN(SMFIN001),
       NOAPPLID,
       LINECNT(60),
       FORMAT(':','/'),
       PRECISION(4),
   LIST(OUTPUT(LIST0001),
       FIELDS(TRAN,
              APPLID,
              TASKNO,
              PC31AHWM,
              PC31AHWM(K),
              PC31AHWM(KB),
              PC31AHWM(M),
              PC31AHWM(MB),
              RESPONSE))
```

```
 V3R2M0                                                CICS Performance Analyzer
                                                          Performance List

LIST0001 Printed at 12:03:45  3/15/2011    Data from 23:40:54  2/03/2010                                          Page       1

Tran APPLID     TaskNo PC31aHWM PC31aHWM PC31aHWM PC31aHWM PC31aHWM Response
                                  K        KB       M        MB      Time
XCMT A02CICP1     3973   151184      151      148        0        0   6.0242
NPXF A02CICP1     3993    21872       22       21        0        0    .0111
HR00 A02CICP5      106   426832      427      417        0        0    .0650
CWBG A02CICP5      107      768        1        1        0        0    .0018
CRMF A02CICP5      108     1736        2        2        0        0    .0015
CATD A02CICP5      109   258352      258      252        0        0    .0257
CWBG A02CICP5      110      768        1        1        0        0    .0017
CRMF A02CICP5      111     1736        2        2        0        0    .0015
CWBG A02CICP5      112      768        1        1        0        0    .0014
CWBG A02CICP5      114      768        1        1        0        0    .0014
CRSQ A02CICP5      113      872        1        1        0        0    .0027
CRMF A02CICP5      115     1736        2        2        0        0    .0014
CWBG A02CICP5      116      768        1        1        0        0    .0015
CRMF A02CICP5      117     1736        2        2        0        0    .0014
CWBG A02CICP5      118      768        1        1        0        0    .0014
CWBG A02CICP5      119      768        1        1        0        0    .0014
CRMF A02CICP5      120     1736        2        2        0        0    .0014
CWBG A02CICP5      121      768        1        1        0        0    .0014
CRMF A02CICP5      122     1736        2        2        0        0    .0017
SYSU A02CICP5      123   151104      151      148        0        0    .0324
```

Figure 7. Performance List report: Precision(4) and conversion of numeric fields

Example: Precision(6) and conversion of numeric fields: The following example is the same report as the previous example in Figure 7 but with microsecond precision.

The commands to request this report are like the following:

```
CICSPA IN(SMFIN001),
       NOAPPLID,
       LINECNT(60),
       FORMAT(':','/'),
       PRECISION(6),
   LIST(OUTPUT(LIST0001),
       FIELDS(TRAN,
              APPLID,
              TASKNO,
              PC31AHWM,
              PC31AHWM(K),
              PC31AHWM(KB),
              PC31AHWM(M),
              PC31AHWM(MB),
              RESPONSE))
```

```
 V3R2M0                                                CICS Performance Analyzer
                                                          Performance List

LIST0001 Printed at 12:03:45  3/15/2011    Data from 23:40:54  2/03/2010                                          Page       1

Tran APPLID     TaskNo PC31aHWM PC31aHWM PC31aHWM PC31aHWM PC31aHWM Response
                                  K        KB       M        MB      Time
XCMT A02CICP1     3973   151184      151      148        0        0 6.024186
NPXF A02CICP1     3993    21872       22       21        0        0  .011066
HR00 A02CICP5      106   426832      427      417        0        0  .065014
CWBG A02CICP5      107      768        1        1        0        0  .001800
CRMF A02CICP5      108     1736        2        2        0        0  .001499
CATD A02CICP5      109   258352      258      252        0        0  .025707
CWBG A02CICP5      110      768        1        1        0        0  .001672
CRMF A02CICP5      111     1736        2        2        0        0  .001530
CWBG A02CICP5      112      768        1        1        0        0  .001411
CWBG A02CICP5      114      768        1        1        0        0  .001380
CRSQ A02CICP5      113      872        1        1        0        0  .002673
CRMF A02CICP5      115     1736        2        2        0        0  .001419
CWBG A02CICP5      116      768        1        1        0        0  .001508
CRMF A02CICP5      117     1736        2        2        0        0  .001436
CWBG A02CICP5      118      768        1        1        0        0  .001418
CWBG A02CICP5      119      768        1        1        0        0  .001378
CRMF A02CICP5      120     1736        2        2        0        0  .001382
CWBG A02CICP5      121      768        1        1        0        0  .001448
CRMF A02CICP5      122     1736        2        2        0        0  .001702
SYSU A02CICP5      123   151104      151      148        0        0  .032409
```

Figure 8. Performance List report: Precision(6) and conversion of numeric fields

Example: Performance Alerts List: This is an example of performance alert reporting, useful for monitoring compliance to Service Level Agreements and CICS transaction performance standards.

The commands to request this report are like the following:

```
CICSPA IN(SMFIN001),
       APPLID(*),
       PRECISION(4),
   LIST(OUTPUT(LIST0001),
       ALERTDEF(ALERT99),
       FIELDS(TRAN,
              PROGRAM,
              RESPONSE,
              RESPONSE(SEV),
              DISPATCH(TIME,SEV),
              CPU(TIME,SEV),
              SUSPEND(TIME,SEV),
              DISPWAIT(TIME),
              FCWAIT(TIME),
              FCAMCT,
              IRWAIT(TIME)))
```

```
 V3R2M0                                                CICS Performance Analyzer
                                                          Performance List

LIST0001 Printed at 17:19:36  4/21/2010    Data from 07:51:03  3/26/2009                        APPLID XYZ299V2


                            Sev               Sev               Sev               Sev
Tran Program  Response Response Dispatch Dispatch User CPU User CPU  Suspend  Suspend DispWait  FC Wait   FCAMRq  IR Wait
                  Time     Time     Time     Time     Time     Time     Time     Time     Time     Time              Time
CESN DFHSNP      .0456 Info        .0453 Info        .0043 Info        .0003             .0003    .0000        0    .0000
CSTE DFHTACP     .0490 Info        .0371 Info        .0032 Info        .0120             .0119    .0000        0    .0000
CESN DFHSNP      .0066             .0036             .0021 Info        .0029             .0001    .0000        0    .0000
CEJR DFHEJITL    .0457 Info        .0414 Info        .0357 Warning     .0043             .0000    .0000        0    .0000
CEJR DFHEJITL    .0006             .0003             .0002             .0004             .0000    .0000        0    .0000
CEJR DFHEJITL    .0006             .0001             .0001             .0005             .0000    .0000        0    .0000
CEJR DFHEJITL    .0275 Info        .0233 Info        .0017 Info        .0043             .0003    .0007       10    .0000
CRTP DFHZRTP     .0080             .0056             .0016             .0024             .0004    .0000        0    .0000
CEDA DFHEDAP  163.3748 Critical    .5525 Warning     .3450 Critical 162.8222             .0023    .3245     9589    .0000
CSHQ DFHSHSY  192.6462 Critical    .0922 Info        .0091 Info     192.5540             .0057    .0000        0    .0000
CESD DFHCESD     .0037             .0008             .0007             .0028             .0001    .0000        0    .0000
CISD DFHISCOP    .0006             .0001             .0001             .0005             .0000    .0000        0    .0000
CSKL EZACIC02 191.6213 Critical 190.8965 Critical    .0134 Warning     .7248             .0620    .0013        1    .0000
CKAM DFHMQMON 197.1525             .0187             .0035          197.1338             .0945    .0000        0    .0000
CSNC DFHCRNP  205.4532 Critical    .0737 Info        .0022 Info     205.3795             .0057    .0000        0    .0000
CSNE DFHZNAC  199.6088 Critical    .0366 Info        .0035 Info     199.5722             .0001    .0000        0    .0000
```

Figure 9. Performance List report: Performance alerts

To create an extract file, add the DD statement for the extract data set to the JCL and add the corresponding DDNAME operand to the LIST command.

```
Tran;Program;Response Time;Response Time Sev;Dispatch Time Sev;User CPU Time Sev;Suspend Time Sev;DispWait Time;...
CSSY;DFHAPATT;   .0038;        ;        ;        ;        ;   .0000;   .0000;       0;   .0000
CSSY;DFHAPATT;   .0060;        ;        ;        ;        ;   .0000;   .0000;       0;   .0000
CSSY;DFHAPATT;   .0105;Info    ;        ;        ;        ;   .0041;   .0000;       0;   .0000
CSSY;DFHAPATT;   .0364;Info    ;Info    ;Info    ;        ;   .0053;   .0000;       0;   .0000
CSSY;DFHAPATT;   .0913;Info    ;Info    ;Info    ;        ;   .0537;   .0000;       0;   .0000
CGRP;DFHZCGRP;   .1452;Warning ;Info    ;Info    ;        ;   .1134;   .0000;       0;   .0000
CSSY;DFHAPATT;   .1520;Warning ;Info    ;Info    ;        ;   .1096;   .0000;       0;   .0000
CSSY;DFHAPATT;   .1648;Warning ;Info    ;Info    ;        ;   .1353;   .0000;       0;   .0000
CSSY;DFHAPATT;   .2747;Warning ;Info    ;Info    ;        ;   .2072;   .0000;       0;   .0000
CSSY;DFHAPATT;   .3263;Warning ;Info    ;Info    ;        ;   .2422;   .0000;       0;   .0000
CSSY;DFHAPATT;   .3409;Warning ;Info    ;Info    ;        ;   .2649;   .0000;       0;   .0000
CSSY;DFHAPATT;   .4730;Warning ;Info    ;Info    ;        ;   .1103;   .0000;       1;   .0000
CPLT;DFHSIPLT;  5.9899;        ;        ;        ;        ;   .0031;   .0210;       9;   .0000
CSSY;DFHAPATT;  5.9837;Critical;Critical;Critical;        ;   .3840;   .5694;    3786;   .0000
CJSR;DFHSJITL;   .0360;Info    ;Info    ;Info    ;        ;   .0049;   .0000;       0;   .0000
CRLR;DFHRLR  ;   .0485;Info    ;Info    ;        ;        ;   .0198;   .0000;       0;   .0000
CPIR;DFHPIITL;   .0629;        ;        ;        ;        ;   .0321;   .0000;       0;   .0000
...
```

Figure 10. Performance List extract: Performance alerts

Performance List Extended report

The Performance List Extended report provides a detailed list of the CMF performance class records. It differs from the Performance List report in that you can specify the sorting criteria for the performance class records.

You can request a list of all available records, or specify selection criteria to list only the information that meets specific requirements.

Report command

The Performance List Extended report can be requested from a Report Set in the CICS PA dialog. Select the **List Extended** report in the **Performance Reports** category.

In batch, the `LISTX` command is used to request the Performance List Extended report.

Performance List Extended

The command to produce the default report is:

```
CICSPA LISTX
```

To tailor the report, you can specify report options as follows:

```
CICSPA LISTX(
        [OUTPUT(ddname),]
        [EXTERNAL(ddname),]
        [BY(by1(ASCEND|DESCEND),
                by2(ASCEND|DESCEND),
                by3(ASCEND|DESCEND)),]
        [LIMIT(byfield(proclim)),]
        [FIELDS(field1[(options)],...),]
        [LINECOUNT(nnn),]
        [TITLE1('...sub-heading left ...'),]
        [TITLE2('...sub-heading right...'),]
        [SELECT(PERFORMANCE(INCLUDE|EXCLUDE(field1(values1),...),...)),]
        [SELECT2(PERFORMANCE(INCLUDE|EXCLUDE(field1(values1),...),...))])
```

The Performance List Extended report is produced using an external SORT facility. An External Work Data Set is required to store the records before they are sorted. This data set is either specified explicitly using **EXTERNAL(ddname),** or CICS PA assigns one from the External Work File pool.

The FIELDS operand controls the format of the report by specifying the desired fields and the order of the columns.

The BY operand specifies up to 3 sort fields, ascending or descending. For one of the sort fields, LIMIT specifies the maximum number of records to process. The default sort sequence is ascending **BY(TRAN)** with no LIMIT.

If BY and FIELDS are not specified, the default is:

```
CICSPA LISTX(BY(TRAN),
            FIELDS(TRAN,              Transaction ID
                   STYPE,             Start type of transaction
                   USERID,            User ID
                   RSYSID,            Remote System ID
                   PROGRAM,           Initial program name
                   TASKNO,            Transaction number
                   STOP(TIMET),       Stop time (hh:mm:ss.thm)
                   RESPONSE,          Response time
```

```
DISPATCH(TIME),    Dispatch time (sss.thmi)
CPU(TIME),         CPU time
SUSPEND(TIME),     Suspend time
DISPWAIT(TIME),    Dispatch wait time
FCWAIT(TIME),      File Control I/O wait time
FCAMCT(TIME),      File Control access method calls
IRWAIT(TIME)))     Inter-Region (MRO) I/O wait time
```

The CICS PA dialog uses the LISTX Report Form to generate the FIELDS and BY operands.

Cross-System Work Extended

The LISTX command can be used to produce the Cross-System Work Extended report as follows:

```
CICSPA LISTX(
        [OUTPUT(ddname),]
        [EXTERNAL(ddname),]
        [BY(UOWID),]
        [PRINTMULTIPLE|NOPRINTMULTIPLE,]
        [PRINTSINGLE|NOPRINTSINGLE,]
        [FIELDS(field1[(options)],...),]
        [LINECOUNT(nnn),]
        [TITLE1('...sub-heading left ...'),]
        [TITLE2('...sub-heading right...'),]
        [SELECT(PERFORMANCE(INCLUDE|EXCLUDE(field1(values1),...),...)),]
        [SELECT2(PERFORMANCE(INCLUDE|EXCLUDE(field1(values1),...),...))])
```

This produces a report similar to the Performance List Extended report, but note the following differences:

1. No other BY sort field can be specified.
2. LIMIT is ignored.
3. CMF records for the same Network UOWID are reported together. A blank line separates each network unit-of-work, except when you specify NOPRINTMULTIPLE,PRINTSINGLE. In this case, no blank lines are necessary as each record is a distinct unit-of-work.
4. The report heading shows “Cross-System Work Extended”.
5. The sorting sequence is the same as the default Cross-System Work report (see “Cross-System Work report” on page 69):
   NETUOWPX
   NETNAME (ascending)
   NETUOWSX
   Network unit-of-work ID (ascending)
   NETUOWSX
   Period or syncpoint count (descending)
   STOP Task Stop time (descending)
   APPLID
   CICS generic APPLID (ascending)

For an example of the report, see Figure 39 on page 74.

Report content

You can specify a LISTX Report Form (FIELDS operand) to tailor the format and content of the Performance List Extended report. If a Report Form is not specified, the default format of the report is produced.

Default format

A report line is printed for each BY sort field combination, up to the specified LIMIT.

The following report is an example of the default Performance List Extended report.

```
 V3R2M0                                          CICS Performance Analyzer
                                                 Performance List Extended

LSTX0001 Printed at 12:03:45  3/15/2011 Data from 11:10:51  3/24/2010 TO 11:34:13  3/24/2010                          Page   1


 Tran SC Userid   RSID Program    TaskNo Stop         Response Dispatch User CPU  Suspend DispWait  FC Wait   FCAMRq  IR Wait
                                         Time           Time     Time     Time     Time     Time     Time              Time
 AADD TO BRENNER       DFHSAALL       52 11:12:54.123    .0945    .0831    .0084    .0114    .0113    .0000        0    .0000
 AADD TO BRENNER       DFHSAALL       54 11:13:06.217    .0636    .0619    .0047    .0017    .0016    .0000        0    .0000
 AADD TP BRENNER       DFHSAALL       65 11:14:27.328    .0029    .0026    .0017    .0003    .0002    .0000        3    .0000
 AADD TO BRENNER       DFHSAALL      551 11:26:41.439    .0016    .0016    .0013    .0001    .0000    .0000        0    .0000
 AADD TP BRENNER       DFHSAALL      561 11:27:02.540    .0026    .0022    .0017    .0003    .0002    .0000        3    .0000
 AADD TO GBURGES       DFHSAALL      136 11:20:04.651    .0011    .0010    .0010    .0001    .0000    .0000        0    .0000
 AADD TO GBURGES       DFHSAALL      137 11:20:08.762    .0022    .0021    .0012    .0001    .0000    .0000        0    .0000
 AADD TP GBURGES       DFHSAALL      138 11:20:15.123    .0023    .0022    .0013    .0001    .0000    .0000        0    .0000
 AADD TO GBURGES       DFHSAALL      183 11:21:51.234    .0022    .0022    .0012    .0001    .0000    .0000        0    .0000
 AADD TP GBURGES       DFHSAALL      184 11:21:58.310    .0023    .0022    .0013    .0001    .0000    .0000        0    .0000
 ABRW TO CBAKER        DFHSABRW      139 11:16:51.429    .6982    .6717    .0385    .0264    .0111    .0051        6    .0000
 ABRW TP CBAKER        DFHSABRW      140 11:16:52.538    .0018    .0018    .0015    .0001    .0000    .0000        7    .0000
 ABRW TP CBAKER        DFHSABRW      141 11:16:52.647    .0021    .0020    .0015    .0001    .0000    .0000        7    .0000
 ABRW TP CBAKER        DFHSABRW      142 11:16:52.756    .0018    .0017    .0014    .0001    .0000    .0000        7    .0000
 ABRW TP CBAKER        DFHSABRW      143 11:16:53.865    .0020    .0019    .0015    .0001    .0000    .0000        7    .0000
 ABRW TP CBAKER        DFHSABRW      144 11:16:53.974    .0038    .0037    .0013    .0001    .0000    .0000        0    .0000
 ABRW TO CBAKER        DFHSABRW      365 11:22:38.083    .0020    .0019    .0015    .0001    .0000    .0000        6    .0000
 ABRW TP CBAKER        DFHSABRW      366 11:22:40.192    .0019    .0016    .0013    .0002    .0000    .0000        7    .0000
 ABRW TP CBAKER        DFHSABRW      367 11:22:41.200    .0018    .0018    .0015    .0001    .0000    .0000        7    .0000
 ABRW TP CBAKER        DFHSABRW      368 11:22:41.319    .0018    .0017    .0012    .0001    .0000    .0000        0    .0000
 ABRW TO CBAKER        DFHSABRW      206 11:24:34.129    .0052    .0021    .0021    .0031    .0000    .0000        0    .0030
 ABRW TO BRENNER       DFHSABRW       53 11:12:19.238    .5819    .0783    .0121    .5037    .0127    .0000        0    .4908
 ABRW TP BRENNER       DFHSABRW       59 11:13:17.320    .0070    .0034    .0029    .0036    .0000    .0000        0    .0036
 ABRW TP BRENNER       DFHSABRW       61 11:13:20.431    .0080    .0028    .0024    .0052    .0000    .0000        0    .0051
 ABRW TP BRENNER       DFHSABRW       62 11:13:21.542    .0064    .0027    .0023    .0036    .0000    .0000        0    .0036
 ABRW TP BRENNER       DFHSABRW       63 11:13:24.653    .0018    .0017    .0014    .0001    .0000    .0000        0    .0000
 ABRW TO GBURGES       DFHSABRW      109 11:19:44.764    .0071    .0040    .0027    .0030    .0000    .0000        0    .0030
 ABRW TP GBURGES       DFHSABRW      110 11:19:49.875    .0064    .0031    .0021    .0033    .0000    .0000        0    .0032
 ABRW TP GBURGES       DFHSABRW      111 11:19:50.986    .0065    .0032    .0022    .0033    .0000    .0000        0    .0033
```

Figure 11. Performance List Extended report : default format

For the complete list of performance class data fields that can be selected for the Performance List report, see the *CICS Performance Analyzer for z/OS User's Guide.*

A brief description of the fields in the default report follows. For more details, see "CMF performance class data fields" on page 263.

Tran
The Transaction ID (field: TRAN, owner: DFHTASK, field ID: 001) identifies the name of the transaction that this performance class record represents. Applications that are using Distributed Program Link (DPL) requests should use the TRANSID('xxxx') parameter on the EXEC CICS LINK PROGRAM('xxxxxxxx') command to enable better transaction/application analysis from the monitoring performance class data. If the TRANSID('xxxx') parameter is not specified all the performance class records on the target system for a Distributed Program Link (DPL) mirror transaction will have the same transaction ID. For example, 'CSMI' for a Distributed Program Link (DPL) request from another connected CICS system.

SC The transaction start type (field: STYPE, owner: DFHTASK, field ID: 004).

Userid
The User identifier of the transaction (owner: DFHCICS, field ID: 089).

RSID
The Transaction Routing Sysid (field: RSYSID, owner: DFHCICS, field ID: 130) can be used to identify the connection name (sysid) of the remote system to which the transaction was routed. If the transaction was not routed this field is

blank and the initial program name **Program** field will identify the initial application program name invoked for the transaction.

Program
The Program Name (field: PGMNAME, owner: DFHPROG, field ID: 071) identifies the initial application program invoked for the transaction. Depending on the type of transaction, this field contains either the application program name as defined in the transaction definition, the program name returned by a user written dynamic routing program, the application program name passed on a function shipped Dynamic Program Link (DPL) request, the initial application program name of an ONC RPC Alias Transaction, or the initial application program name of a WEB Alias Transaction. A program name of `########` indicates that the transaction was invoked using the definition of the transaction id specified by the DTRTRAN system initialization parameter.

TaskNo
The transaction identification number (owner: DFHTASK, field ID: 031).

Stop Time
The transaction stop time (owner: DFHCICS, field ID: 005).

Response Time
The transaction response time. This field is calculated by subtracting the transaction start time (owner: DFHCICS, field ID: 005) from the transaction stop time (owner: DFHCICS, field ID: 006).

Dispatch Time
The transaction dispatch time (owner: DFHTASK, field ID: 007).

User CPU Time
The transaction CPU time (owner: DFHTASK, field ID: 008).

Suspend Time
The transaction suspend time (owner: DFHTASK, field ID: 014).

DispWait Time
The transaction dispatch wait time (owner: DFHTASK, field ID: 102).

FC Wait Time
The transaction file control I/O wait time (owner: DFHFILE, field ID: 063).

FCAMRq
The number of file control access method calls (field: FCAMCT, owner: DFHFILE, field ID: 070).

IR Wait Time
The transaction inter-region (MRO) I/O wait time (field: IRIOWTT, owner: DFHTERM, field ID: 100).

Note: Some of the fields might contain large values and be represented in exponential format. For example, 2 834 000 might be shown as 2834E3.

Tailored format

You can tailor the Performance List Extended report to include any CMF performance class field. From the CICS PA dialog, you can design a LISTX Report Form to include the required fields in your report. Sample Report Forms are available to help you tailor your report for a specific purpose.

In batch the `FIELDS` operand of the `LISTX` report command is used to specify the required report fields, their format, and the order of the columns.

Example: Top 20 worst transactions by various criteria: Sample Report Forms are provided to help you format the report for different purposes:

BADCHMDS
Top 20 worst change-TCB mode requests

BADCPU
Top 20 worst CPU times

BADDB2RQ
Top 20 worst DB2 requests

BADFCRQ
Top 20 worst file requests

BADRESP
Top 20 worst response times

BADRMI
Top 20 worst CICS RMI times

BADRMIRQ
Top 20 worst CICS RMI requests

BADSUSP
Top 20 worst suspend times

BADTDRQ
Top 20 worst transient data queue requests

BADTSRQ
Top 20 worst temporary storage queue requests

BADWBRQ
Top 20 worst CICS Web requests

BADWMQRQ
Top 20 worst WebSphere MQ requests

You can edit and change a form to reformat the report. The example in Figure 13 on page 33 was based on the sample form BADRESP, then modified and saved as BADTRANS.

```
                    EDIT LISTX Report Form - BADTRANS

    Field
    Name       S   Type      Limit     Description
__  TRAN____   A   _______   ________  Transaction identifier
__  RESPONSE   D   _______   10______  Transaction response time
__  TERM____   *   _______   ________  Terminal ID
__  STYPE___   _   _______   ________  Transaction start type
__  USERID__   *   _______   ________  User ID
__  RSYSID__   _   _______   ________  Remote System ID
__  PROGRAM_   _   _______   ________  Program name
__  TASKNO__   _   _______   ________  Transaction identification number
__  STOP____   *   TIMES__   ________  Task stop time
__  RESPONSE   *   _______   ________  Transaction response time
__  DISPATCH   *   TIME___   ________  Dispatch time
__  CPU_____   *   TIME___   ________  CPU time
__  SUSPEND_   *   TIME___   ________  Suspend time
__  DISPWAIT   *   TIME___   ________  Redispatch wait time
__  FCWAIT__   _   TIME___   ________  File I/O wait time
__  IRWAIT__   _   TIME___   ________  MRO link wait time
__  EOR_____   _   _______   ---------------- End of Report --------------
__  EOX_____   _   _______   ---------------- End of Extract -------------
__  FCAMCT__   *   _______   ________  File access-method requests
```

Figure 12. LISTX Report Form: using Sort Sequence and Limit

To format this report, specify that the records are sorted by descending response time within ascending transaction ID. Limit the performance class records processed to the first 10 records (the longest 10 response times) for each transaction ID.

```
 V3R2M0                                    CICS Performance Analyzer
                                           Performance List Extended

LSTX0001 Printed at 12:03:45  3/15/2011     Data from 11:10:51  2/14/2010 to 11:34:13  2/14/2010            Page    1
Response Times by Transaction ID                              *** 10 worst times ***

 Tran Response Term SC Userid   RSID Program    TaskNo Stop      Dispatch User CPU  Suspend DispWait  FC Wait  IR Wait
        Time                                          Time        Time     Time     Time     Time     Time     Time
 AADD    .0945 S23C TO BRENNER       DFHSAALL       52 11:12:54     .0831    .0084    .0114    .0113    .0000    .0000
 AADD    .0636 S23C TO BRENNER       DFHSAALL       54 11:13:06     .0619    .0047    .0017    .0016    .0000    .0000
 AADD    .0029 S23C TP BRENNER       DFHSAALL       65 11:14:27     .0026    .0017    .0003    .0002    .0000    .0000
 AADD    .0026 S23C TP BRENNER       DFHSAALL      561 11:27:02     .0022    .0017    .0003    .0002    .0000    .0000
 AADD    .0023 TC26 TP GBURGES       DFHSAALL      138 11:20:15     .0022    .0013    .0001    .0000    .0000    .0000
 AADD    .0023 TC26 TP GBURGES       DFHSAALL      184 11:21:58     .0022    .0013    .0001    .0000    .0000    .0000
 AADD    .0022 TC26 TO GBURGES       DFHSAALL      183 11:21:51     .0022    .0012    .0001    .0000    .0000    .0000
 AADD    .0022 TC26 TO GBURGES       DFHSAALL      137 11:20:08     .0021    .0012    .0001    .0000    .0000    .0000
 AADD    .0016 S23C TO BRENNER       DFHSAALL      551 11:26:41     .0016    .0013    .0001    .0000    .0000    .0000
 AADD    .0011 TC26 TO GBURGES       DFHSAALL      136 11:20:04     .0010    .0010    .0001    .0000    .0000    .0000
 ABRW    .6982 P015 TO CBAKER        DFHSABRW      139 11:16:51     .6717    .0385    .0264    .0111    .0051    .0000
 ABRW    .5819 S23D TO BRENNER       DFHSABRW       53 11:12:19     .0783    .0121    .5037    .0127    .0000    .4908
 ABRW    .0156 TC26 TP GBURGES       DFHSABRW      128 11:19:57     .0028    .0024    .0128    .0000    .0000    .0127
 ABRW    .0146 TC26 TO GBURGES       DFHSABRW      164 11:21:05     .0030    .0023    .0115    .0000    .0000    .0114
 ABRW    .0124 TC26 TP GBURGES       DFHSABRW      169 11:21:17     .0043    .0028    .0080    .0000    .0000    .0080
 ABRW    .0120 TC32 TP GBURGES       DFHSABRW      391 11:24:38     .0120    .0017    .0001    .0000    .0000    .0000
 ABRW    .0097 TC26 TP GBURGES       DFHSABRW      175 11:21:27     .0059    .0025    .0038    .0000    .0000    .0037
 ABRW    .0094 TC26 TP GBURGES       DFHSABRW      117 11:19:52     .0036    .0024    .0058    .0000    .0000    .0057
 ABRW    .0085 TC26 TP GBURGES       DFHSABRW      170 11:21:19     .0037    .0024    .0048    .0000    .0000    .0048
 ABRW    .0085 TC26 TP GBURGES       DFHSABRW      176 11:21:29     .0043    .0024    .0042    .0001    .0000    .0042
 AINQ    .0040 TC26 TO GBURGES       DFHSAALL      187 11:22:14     .0027    .0017    .0013    .0000    .0000    .0013
 AINQ    .0024 S23C TO BRENNER       DFHSAALL      574 11:27:26     .0016    .0015    .0008    .0000    .0000    .0000
 AINQ    .0023 S23C TO BRENNER       DFHSAALL      564 11:27:11     .0022    .0015    .0001    .0000    .0000    .0000
 AINQ    .0020 S23C TO BRENNER       DFHSAALL      341 11:21:19     .0019    .0014    .0001    .0000    .0000    .0000
 AINQ    .0020 S23C TO BRENNER       DFHSAALL      328 11:21:09     .0019    .0012    .0001    .0000    .0000    .0000
 AINQ    .0018 S23C TO BRENNER       DFHSAALL      580 11:27:34     .0017    .0014    .0001    .0000    .0000    .0000
 AINQ    .0018 S23C TO BRENNER       DFHSAALL      112 11:14:46     .0017    .0016    .0001    .0000    .0000    .0000
 AINQ    .0014 R11  TO CBAKER        DFHSAALL      232 11:26:30     .0013    .0012    .0000    .0000    .0000    .0000
 AINQ    .0013 S23C TO BRENNER       DFHSAALL      569 11:27:19     .0013    .0013    .0001    .0000    .0000    .0000
 AINQ    .0012 TC26 TO GBURGES       DFHSAALL      186 11:22:08     .0011    .0010    .0001    .0000    .0000    .0000
 AMNU    .1724 S23D TO BRENNER       DFHSAMNU       50 11:11:53     .1720    .0091    .0004    .0004    .0000    .0000
 AMNU    .0713 CAAD TO CBAKER        DFHSAMNU      249 11:19:41     .0519    .0085    .0194    .0042    .0000    .0000
```

Figure 13. Performance List Extended report: top 10 response times by transaction

Example: Precision(4) and conversion of numeric fields: Figure 14 on page 34 shows an example of a Performance List Extended report with precision to 4 decimal places for clock fields and conversion of count and storage fields to K, M, KB, MB.

The commands to request this report are like the following:

```
CICSPA IN(SMFIN001),
       NOAPPLID,
       LINECNT(60),
       FORMAT(':','/'),
       PRECISION(4),
   LISTX(OUTPUT(LSTX0001),
       EXTERNAL(CPAXW001),
       BY(TRAN,
          CPU(DESCEND)),
       LIMIT(CPU(20)),
       FIELDS(TRAN,
              CPU(TIME),
              PC31AHWM,
              PC31AHWM(K),
              PC31AHWM(KB)
              PC31AHWM(M),
              PC31AHWM(MB)
              RESPONSE))
```

```
 V3R2M0                                    CICS Performance Analyzer
                                           Performance List Extended

LSTX0001 Printed at 12:03:45  3/15/2011 Data from 19:06:30  2/01/2003 to 23:50:44  2/03/2010                        Page      1

Tran User CPU PC31aHWM PC31aHWM PC31aHWM PC31aHWM PC31aHWM Response
       Time              K        KB       M        MB      Time
CWBA    .0283    92208       92       90        0        0    .2609
CWBA    .0251   1938E3     1938     1892        2        2    .1436
CWBA    .0212    92208       92       90        0        0   1.0060
CWBA    .0183   1938E3     1938     1892        2        2    .0673
CWBA    .0128    92208       92       90        0        0    .0287
CWBA    .0086   1975E3     1975     1928        2        2    .1011
CWBA    .0069   1975E3     1975     1928        2        2    .1101
CWBA    .0044   1959E3     1959     1913        2        2    .0171
CWBA    .0036   1973E3     1973     1926        2        2    .0620
CWBA    .0034   1972E3     1972     1926        2        2    .0043
CWBA    .0034   1972E3     1972     1926        2        2    .0046
CWBA    .0033   1972E3     1972     1926        2        2    .0040
CWBA    .0032   1972E3     1972     1926        2        2    .0039
CWBA    .0031    47632       48       47        0        0    .0203
CWBA    .0030   1959E3     1959     1913        2        2    .0042
CWBA    .0029   1959E3     1959     1913        2        2    .0048
CWBA    .0027   1975E3     1975     1928        2        2    .0436
CWBA    .0026   1959E3     1959     1913        2        2    .0037
CWBA    .0026   1959E3     1959     1913        2        2    .0039
CWBA    .0026   1959E3     1959     1913        2        2    .0038
CWBG    .0030     1056        1        1        0        0    .0171
CWBG    .0028      784        1        1        0        0    .0597
CWBG    .0028     1056        1        1        0        0    .0146
CWBG    .0027     1056        1        1        0        0    .0297
CWBG    .0026      784        1        1        0        0    .3154
CWBG    .0026     1056        1        1        0        0    .1528
```

Figure 14. Performance List Extended report: Precision(4) and conversion of numeric fields

Example: Precision(6) and conversion of numeric fields: The following example is the same report as the previous example in Figure 14 but with microsecond precision.

The commands to request this report are like the following:

```
CICSPA IN(SMFIN001),
       NOAPPLID,
       LINECNT(60),
       FORMAT(':','/'),
       PRECISION(6),
   LISTX(OUTPUT(LSTX0001),
       EXTERNAL(CPAXW001),
       BY(TRAN,
          CPU(DESCEND)),
       LIMIT(CPU(20)),
       FIELDS(TRAN,
              CPU(TIME),
              PC31AHWM,
```

```
                                        PC31AHWM(K),
                                        PC31AHWM(KB)
                                        PC31AHWM(M),
                                        PC31AHWM(MB)
                                        RESPONSE))


 V3R2M0                                  CICS Performance Analyzer
                                         Performance List Extended

LSTX0001 Printed at 12:03:45  3/15/2011 Data from 19:06:30  2/01/2010 to 23:50:44  2/03/2010                    Page      1

Tran User CPU PC31aHWM PC31aHWM PC31aHWM PC31aHWM PC31aHWM Response
        Time               K        KB       M        MB      Time
CWBA  .028304    92208       92       90        0        0  .260863
CWBA  .025072   1938E3     1938     1892        2        2  .143602
CWBA  .021184    92208       92       90        0        0 1.006030
CWBA  .018288   1938E3     1938     1892        2        2  .067328
CWBA  .012848    92208       92       90        0        0  .028668
CWBA  .008624   1975E3     1975     1928        2        2  .101078
CWBA  .006944   1975E3     1975     1928        2        2  .110104
CWBA  .004448   1959E3     1959     1913        2        2  .017112
CWBA  .003648   1973E3     1973     1926        2        2  .062020
CWBA  .003376   1972E3     1972     1926        2        2  .004337
CWBA  .003360   1972E3     1972     1926        2        2  .004596
CWBA  .003264   1972E3     1972     1926        2        2  .003970
CWBA  .003168   1972E3     1972     1926        2        2  .003947
CWBA  .003104    47632       48       47        0        0  .020255
CWBA  .002992   1959E3     1959     1913        2        2  .004209
CWBA  .002880   1959E3     1959     1913        2        2  .004786
CWBA  .002736   1975E3     1975     1928        2        2  .043593
CWBA  .002608   1959E3     1959     1913        2        2  .003677
CWBA  .002576   1959E3     1959     1913        2        2  .003896
CWBA  .002560   1959E3     1959     1913        2        2  .003811
CWBG  .002960     1056        1        1        0        0  .017110
CWBG  .002784      784        1        1        0        0  .059680
CWBG  .002768     1056        1        1        0        0  .014561
CWBG  .002656     1056        1        1        0        0  .029693
CWBG  .002624      784        1        1        0        0  .315409
CWBG  .002576     1056        1        1        0        0  .152797
```

Figure 15. Performance List Extended report: Precision(6) and conversion of numeric fields

Performance Summary report

The Performance Summary report is a summary of the CMF performance class records.

You can request a report that summarizes all available records, or you can specify selection criteria to summarize only the information that meets specific requirements.

Report command

The Performance Summary report can be requested from a Report Set in the dialog. Select the **Summary** report in the **Performance Reports** category.

In batch, the `SUMMARY` command is used to request the Performance Summary report.

Performance Summary report

The command to produce the default report is:

```
CICSPA SUMMARY
```

To tailor the report, you can specify report options as follows:

```
CICSPA SUMMARY(
          [OUTPUT(ddname),]
          [EXTERNAL(ddname),]
          [NOTOTALS|TOTALS(n),]
          [INTERVAL(hh:mm:ss),]
          [ALERTDEF(defname),]
          [SEVERITY(ELIGIBLE|ALL),]
          [FIELDS(fld1[(options[,SEV(CRITICAL|WARNING|INFO,COUNT|PERCENT)])],...),]
          [LINECount(nnn),]
          [TITLE1('...sub-heading left...'),]
          [TITLE2('...sub-heading right...'),]
          [SELECT(PERFORMANCE(INCLUDE|EXCLUDE(field1(values1),...),...)),]
          [SELECT2(PERFORMANCE(INCLUDE|EXCLUDE(field1(values1),...),...))])
```

The FIELDS operand controls the format of the report by specifying the desired fields, their format, the order of the columns, and for numeric fields, the statistical functions (**`AVE|DEV|MIN|MAX|TOT|nn|RNGCOUNT(range)|RNGPERCENT(range)`**) used to summarize the data. nn% represents a peak percentile, such as 95%. A range can be specified as a lower limit and an upper limit separated by a hyphen (for example, 0.1-0.2), or as a comparison operator (one of: = > >= < <=) followed by a value (for example, >0). If the function is omitted, **`AVE`** is the default.

For Performance Alert reporting, SEV indicates a performance alert field. ALERTDEF specifies the Performance Alert Definition. SEVERITY specifies whether to report all transactions or only those that match the resource criteria in the Performance Alert Definition. **`ALERT`** is the field name used to provide count or percentage totals of transactions for an alert severity level (CRITICAL, WARNING, or INFO) for the summary key.

You can specify up to 8 Sort Key fields to order in ascending or descending sequence. The default is **`TRAN(ASCEND).`** The BY operand is optional. If the FIELDS operand is specified with key fields, the BY operand is ignored.

Sort fields identify the grouping required for summarization, and can be START and STOP time, or any character field, including character user fields.

Key fields must be the first fields specified in the Form and must be contiguous. However, TASKCNT and TASKTCNT can be specified anywhere in the list of fields, including amongst the key fields.

In addition to the Sort Key fields, one numeric field can be selected as Ascending or Descending to activate **Alternate Sequencing.** This will change the order of report lines from Sort Key to numeric field sequence. For example, specify Alternate Sequencing of D for RESPONSE time to see the transactions with the highest response time at the top of the report. Note that grouping by Sort Key remains unaffected.

If BY and FIELDS are omitted, the default is:

```
CICSPA SUMMARY(
          FIELDS(TRAN,                Transaction ID
                 TASKCNT,             Number of CMF Records
                 RESPONSE(AVE,MAX),   Avg/Max Response Time
                 DISPATCH,            Avg Dispatch Time
                 CPU,                 Avg CPU Time
                 SUSPEND(AVE,MAX),    Avg/Max Suspend Time
                 DISPWAIT,            Avg Dispatch Wait Time
                 FCWAIT,              Avg File Control I/O Wait Time
                 FCAMCT,              Avg FC Access Method Calls
                 IRWAIT,              Avg Inter-Region I/O Wait Time
                 SC24UHWM,            Avg User Storage HWM below 16MB
                 SC31UHWM))           Avg User Storage HWM above 16MB
```

If you specify a FIELDS operand that contains only sort key fields with or without the special TASKCNT or TASKTCNT fields, then the report contains those explicitly specified fields instead of the default sort key field TRAN, followed by the remaining default fields. This enables you to customize the sort order of the default report without explicitly specifying all of the fields in the report. To suppress the default fields, so that the report contains only the fields explicitly specified by the FIELDS operand, you must specify at least one field that is not a sort key, and that is not TASKCNT or TASKTCNT: for example, the numeric field RESPONSE.

The CICS PA dialog uses the SUMMARY Report Form to generate the FIELDS operand.

If the report becomes too large . . .

The Performance Summary report sorts the input records before reporting. When the EXTERNAL operand is not specified, CICS PA performs an internal sort using virtual storage. The amount of virtual storage required depends on the number of key fields and the resulting combinations. If the report becomes too large for virtual storage, you can use an External Work Data Set to store the records before they are sorted. Use **EXTERNAL(ddname)** to specify the External Work Data Set and invoke the external SORT facility.

Performance Summary Extract

The SUMMARY command can be used to tailor the format of the Performance Data Extract file.

The command format for the Performance Summary Extract is:

```
CICSPA SUMMARY(
          [OUTPUT(ddname),]
           DDNAME(ddname),
          [DELIMIT('field-delimiter'),]
          [LABELS|NOLABELS,]
```

```
[FLOAT,]
[EXTERNAL(ddname),]
[INTERVAL(hh:mm:ss),]
[ALERTDEF(alertname),]
[SEVERITY(ELIGIBLE|ALL),]
[FIELDS(fld1[(options[,SEV(CRITICAL|WARNING|INFO,COUNT|PERCENT)])],...),]
[TITLE1('...1st 64 characters of title.of Recap...'),]
[TITLE2('...2nd 64 characters of title of Recap...'),]
[SELECT(PERFORMANCE(INCLUDE|EXCLUDE(field1(values1),...),...)),]
[SELECT2(PERFORMANCE(INCLUDE|EXCLUDE(field1(values1),...),...))])
```

See Figure 88 on page 215 for an example of the Performance Summary Extract file.

Totals are not written to the file. That is reserved for later processing of the extract data.

Report content

You can specify a SUMMARY Report Form (FIELDS operand) to tailor the format and content of the Performance Summary report.

The first 1 to 8 character or time stamp (START, STOP) fields are used to summarize and subtotal the Summary report entries. The combination of key field values determines the group of data for summarization. A summary line is printed for each Key field combination. Depending on the value specified in the TOTALS operand, the Summary report prints a subtotal line whenever a key field value changes.

If a Report Form is not specified, the default format of the report is produced.

Default format

The following report is an example of the default Performance Summary report.

```
 V3R2M0                                                CICS Performance Analyzer
                                                         Performance Summary

SUMM0001 Printed at 12:03:45  3/15/2011     Data from 11:10:51  3/24/2010 to 11:34:13  3/24/2010                        Page   1

                      Avg      Max       Avg      Avg      Avg      Max      Avg      Avg      Avg      Avg      Avg      Avg
Tran       #Tasks Response Response Dispatch User CPU  Suspend  Suspend DispWait  FC Wait   FCAMRq  IR Wait SC24UHWM SC31UHWM
                      Time     Time     Time     Time     Time     Time     Time     Time              Time
AADD           10    .0175    .0945    .0161    .0024    .0014    .0013    .0000    .0000        1    .0000      960        0
ABRW          134    .0142    .6982    .0085    .0022    .0057    .0002    .0000    .0053        3    .0053     1007        0
AINQ           10    .0020    .0040    .0017    .0014    .0003    .0000    .0000    .0001        1    .0001      928        0
AMNU           12    .0270    .1724    .0246    .0028    .0023    .0008    .0000    .0000        0    .0000      424      221
AUPD           12    .0144    .0665    .0083    .0030    .0061    .0014    .0000    .0010        0    .0010      960        0
B               2    .0028    .0031    .0027    .0015    .0001    .0000    .0000    .0000        0    .0000        0        0
BING            1    .0024    .0024    .0023    .0016    .0001    .0000    .0000    .0000        0    .0000        0        0
```

Figure 16. Performance Summary report: default format

For the complete list of performance class data fields that can be selected for the Performance Summary report, see the *CICS Performance Analyzer for z/OS User's Guide.*

The default report is summarized by transaction ID and contains the following information. For more details on the fields in this report, see "CMF performance class data fields" on page 263.

Tran
The Transaction ID.

#Tasks
The number of tasks (performance records) summarized.

Avg Response Time
The average response time.

Max Response Time
The maximum response time.

Avg Dispatch Time
The average dispatch time.

Avg User CPU Time
The average CPU time.

Avg Suspend Time
The average suspend time.

Max Suspend Time
The maximum suspend time.

Avg DispWait Time
The average dispatch wait time.

Avg FC Wait Time
The average file control I/O wait time.

Avg FCAMRq Count
The average number of access method calls.

Avg IR Wait Time
The average inter-region (MRO) I/O wait time.

Avg SC24UHWM
The average storage high-water mark below 16MB.

Avg SC31UHWM
The average storage high-water mark above 16MB.

Note: Some of the fields might contain very large values and be represented in exponential format. For example, 2 834 000 might be shown as 2834E3.

Tailored format

You can tailor the Performance Summary report to include any CMF performance class field. From the CICS PA dialog, you can design a SUMMARY Report Form to include the required fields in your report. Sample Report Forms are available to help you tailor your report for a specific purpose.

In batch the `FIELDS` operand of the `SUMMARY` report command is used to specify the required report fields.

Example: Summary by start time: The Performance Summary report in Figure 18 on page 40 shows transaction activity broken down into 30 second time intervals. This allows you to measure transaction performance variations over time.

The commands to request this report are shown in the following example:

```
CICSPA SUMMARY(
              INTERVAL(00:00:30),          Time Interval is 30 seconds
              FIELDS(TRAN,                 Transaction ID
                     START,                Transaction Start Time
                     TASKCNT,              Total Task count
                     RESPONSE(AVE,MAX),    Transaction response time
                     DISPATCH(TIME(AVE)),  Dispatch time
                     CPU(TIME(AVE)),       CPU time
                     SUSPEND(TIME(AVE)),   Suspend time
                     DISPWAIT(TIME(AVE)),  Redispatch wait time
                     FCWAIT(TIME(AVE)),    File I/O wait time
                     FCAMCT(AVE),          File access-method requests
                     IRWAIT(TIME(AVE)),    MRO link wait time
```

```
                    SC24UHWM(AVE),         UDSA HWM below 16MB
                    SC31UHWM(AVE)),        EUDSA HWM above 16MB
          TITLE1('Summary by Start Interval within Transaction ID'))
```

To use the CICS PA dialog to request this report, specify a Report Form like the following:

```
                    EDIT SUMMARY Report Form - STARTIME

     Field    Sort
     Name +   K  O  Type    Fn   Description
__   TRAN____ K  A  _______ ___  Transaction identifier
__   START___ K  A  TIMES__ ___  Task start time
__   TASKCNT_        _______ ___  Total Task count
__   RESPONSE        _______ AVE  Transaction response time
__   RESPONSE        _______ MAX  Transaction response time
__   DISPATCH        TIME___ AVE  Dispatch time
__   CPU_____        TIME___ AVE  CPU time
__   SUSPEND_        TIME___ AVE  Suspend time
__   DISPWAIT        TIME___ AVE  Redispatch wait time
__   FCWAIT__        TIME___ AVE  File I/O wait time
__   FCAMCT__        _______ AVE  File access-method requests
__   IRWAIT__        TIME___ AVE  MRO link wait time
__   SC24UHWM        _______ AVE  UDSA HWM below 16MB
__   SC31UHWM        _______ AVE  EUDSA HWM above 16MB
__   EOR_____        _______ ___  ---------------- End of Report ----------------
__   EOX_____        _______ ___  ---------------- End of Extract ---------------
```

Figure 17. SUMMARY Report Form: by start time within transaction

```
 V3R2M0                                          CICS Performance Analyzer
                                                   Performance Summary

SUMM0001 Printed at 12:03:45  3/15/2011     Data from 15:04:02  2/27/2010 to 15:07:28  2/27/2010                    Page   1
Summary by Start Interval within Transaction ID

                              Avg      Max      Avg      Avg      Avg      Avg      Avg      Avg      Avg      Avg      Avg
Tran     Start      #Tasks Response Response Dispatch User CPU  Suspend DispWait  FC Wait   FCAMRq  IR Wait SC24UHWM SC31UHWM
         Interval             Time     Time     Time     Time     Time     Time     Time              Time
TR01     15:04:00       89    .0584    .1233    .0012    .0011    .0572    .0015    .0025        3    .0000        0    88363
TR01     15:04:30      109    .0562    .1220    .0011    .0011    .0550    .0016    .0026        3    .0000        0    88360
TR01     15:05:00      104    .0551    .1328    .0013    .0012    .0538    .0017    .0027        3    .0000        0    88356
TR01     15:05:30      106    .0550    .1041    .0011    .0011    .0539    .0018    .0028        3    .0000        0    88355
TR01     15:06:00       86    .0588    .1354    .0012    .0011    .0576    .0016    .0026        3    .0000        0    88362
TR01     15:06:30       99    .0557    .0823    .0012    .0011    .0545    .0018    .0029        3    .0000        0    88352
TR01     15:07:00      117    .0549    .0912    .0012    .0011    .0537    .0016    .0024        3    .0000        0    88353
TR01                   710    .0562    .1354    .0012    .0011    .0550    .0016    .0026        3    .0000        0    88357

TR02     15:04:00      101    .1719    .3674    .0030    .0029    .1689    .0055    .0134       18    .0000        0    88358
TR02     15:04:30       98    .1612    .3661    .0029    .0028    .1583    .0056    .0134       18    .0000        0    88353
TR02     15:05:00      105    .1548    .3683    .0029    .0029    .1519    .0045    .0116       18    .0000        0    88356
TR02     15:05:30      104    .1693    .4151    .0030    .0029    .1663    .0048    .0122       19    .0000        0    88363
TR02     15:06:00      105    .1631    .4046    .0030    .0029    .1601    .0043    .0122       18    .0000        0    88359
TR02     15:06:30       89    .1572    .3499    .0030    .0028    .1541    .0049    .0125       18    .0000        0    88357
TR02     15:07:00       88    .1541    .3164    .0031    .0028    .1511    .0050    .0123       18    .0000        0    88354
TR02                   690    .1619    .4151    .0030    .0029    .1589    .0049    .0125       18    .0000        0    88357
```

Figure 18. Performance Summary report: by start time within transaction

Example: Summary by stop time: The Performance Summary report in Figure 20 on page 41 shows transaction activity broken down into 1 minute intervals. Every transaction that completed processing during the interval is reported. This allows you to look at periods of time during which performance might be degraded and examine each Transaction ID's usage.

To request this report, specify a **Time Interval** of **00:01:00** (the default) on the Performance Summary report panel, and use the sample Report Form **TRTODSUM** shown in the following example, or specify a similar form.

```
                    EDIT SUMMARY Report Form - TRTODSUM

     Field    Sort
     Name +   K  O  Type    Fn   Description
__   STOP____ K  A  TIMES__ ___  Task stop time
__   TRAN____ K  A  _______ ___  Transaction identifier
__   TASKCNT_        _______ ___  Total Task count
__   RESPONSE        _______ AVE  Transaction response time
__   RESPONSE        _______ MAX  Transaction response time
__   DISPATCH        TIME___ AVE  Dispatch time
__   CPU_____        TIME___ AVE  CPU time
__   SUSPEND_        TIME___ AVE  Suspend time
__   DISPWAIT        TIME___ AVE  Redispatch wait time
__   FCWAIT__        TIME___ AVE  File I/O wait time
__   FCAMCT__        _______ AVE  File access-method requests
__   IRWAIT__        TIME___ AVE  MRO link wait time
__   SC24UHWM        _______ AVE  UDSA HWM below 16MB
__   SC31UHWM        _______ AVE  EUDSA HWM above 16MB
__   EOR_____        _______ ___  ---------------- End of Report ----------------
__   EOX_____        _______ ___  ---------------- End of Extract ---------------
```

Figure 19. SUMMARY Report Form: Transactions by Time-of-Day

```
 V3R2M0                                          CICS Performance Analyzer
                                                   Performance Summary

SUMM0001 Printed at 12:03:45  3/15/2011     Data from 15:04:02  2/13/2010 to 15:07:28  2/13/2010                    Page   1
Transactions by Time-of-Day

                                Avg      Max      Avg      Avg      Avg      Avg      Avg      Avg      Avg      Avg      Avg
Stop     Tran       #Tasks Response Response Dispatch User CPU  Suspend DispWait  FC Wait   FCAMRq  IR Wait SC24UHWM SC31UHWM
Interval                       Time     Time     Time     Time     Time     Time     Time              Time
15:04:00 TR01          198    .0572    .1233    .0012    .0011    .0560    .0016    .0026        3    .0000        0    88361
15:04:00 TR02          199    .0569    .2220    .0012    .0011    .0557    .0016    .0024        3    .0000        0    88359
15:04:00 TR03          201    .1743    .3789    .0030    .0029    .1713    .0053    .0125       18    .0000        0    88360
15:04:00 TR04          199    .1666    .3674    .0029    .0028    .1637    .0056    .0134       18    .0000        0    88356
   . . .
15:04:00 TR12          216    .0901    .1345    .0014    .0013    .0887    .0021    .0049        5    .0000        0    88359
15:04:00 TR13          225    .0888    .1234    .0014    .0013    .0874    .0024    .0050        5    .0000        0    88357
15:04:00              8903    .0473    .6318    .0013    .0013    .0460    .0015    .0035        7    .0000        0    69261

15:05:00 TR01          210    .0551    .1328    .0012    .0011    .0538    .0017    .0027        3    .0000        0    88355
15:05:00 TR02          207    .1609    .4151    .0030    .0029    .1579    .0046    .0119       18    .0000        0    88359
15:05:00 TR03          211    .0062    .0125    .0026    .0025    .0036    .0005    .0031       18    .0000        0    88352
15:05:00 TR04          246    .0069    .0148    .0038    .0037    .0031    .0003    .0026       34    .0000        0    88352
   . . .
15:05:00 TR12          244    .0874    .1227    .0014    .0013    .0860    .0026    .0052        5    .0000        0    88354
15:05:00 TR13          283    .0887    .1924    .0014    .0013    .0873    .0024    .0051        5    .0000        0    88360
15:05:00              9275    .0476    .7551    .0014    .0013    .0462    .0014    .0035        7    .0000        0    70591
```

Figure 20. Performance Summary report: by transaction within stop time

Example: DBCTL: An example of a Performance Summary report showing a summary of DBCTL activity by transaction is shown in Figure 22 on page 42. The report is sorted by transaction ID and PSB name.

Sample Report Forms are provided to help you format Summary reports to show DBCTL transaction activity:

IMSDBSUM
: Transaction DBCTL Usage Analysis

IMSRQSUM
: Transaction DBCTL Req Analysis

IMSSUM
: IMS DBCTL PSB Usage Analysis

You can edit the sample forms to tailor your reports. Alternatively, you can create a new Report Form, select to specify Field Categories, and select DBCTL to populate the form with DBCTL fields as shown in Figure 3 on page 23.

Move the fields of interest above EOR to include them in the report.

```
                    EDIT SUMMARY Report Form - DBCTLSUM

    Field    Sort                                                - User Field -
    Name +   K  O  Type    Fn    Length  Dictionary Definition  Offset  Length
__  TRAN____ K  A  _______ ___        8  TRAN     DFHTASK C001   ___     ___
__  PSBNAME_ K  A  _______ ___        8  PSBNAME  DBCTL   C001   ___     ___
__  TASKCNT_        _______ ___        8  TASKCNT  CICSPA  X902   ___     ___
__  RESPONSE        _______ AVE        8  RESP     CICSPA  D901   ___     ___
__  CPU_____        TIME___ AVE        8  USRCPUT  DFHTASK S008   ___     ___
__  DISPATCH        TIME___ AVE        8  USRDISPT DFHTASK S007   ___     ___
__  SUSPEND_        TIME___ AVE        8  SUSPTIME DFHTASK S014   ___     ___
__  POOLWAIT        _______ AVE        8  POOLWAIT DBCTL   A002   ___     ___
__  INTCWAIT        _______ AVE        8  INTCWAIT DBCTL   A003   ___     ___
__  SCHTELAP        _______ AVE        8  SCHTELAP DBCTL   A004   ___     ___
__  DBIOELAP        _______ AVE        8  DBIOELAP DBCTL   A005   ___     ___
__  PILOCKEL        _______ AVE        8  PILOCKEL DBCTL   A006   ___     ___
__  DBIOCALL        _______ AVE        8  DBIOCALL DBCTL   A007   ___     ___
__  DLICALLS        _______ AVE        8  DLICALLS DBCTL   A017   ___     ___
__  EOR_____        _______ ___                                   ___     ___
__  EOX_____        _______ ___                                   ___     ___
__  APPLID__ K  *   _______ ___        8  APPLID   CICSPA  C903   ___     ___
__  START___ K  *   TIMES__ ___        8  START    DFHCICS T005   ___     ___
```

Figure 21. SUMMARY Report Form (DBCTL fields)

This produces a report with the following format:

```
 V3R2M0                                          CICS Performance Analyzer
                                                   Performance Summary

SUMM0001 Printed at 12:03:45  3/15/2011     Data from 15:58:47  2/19/2010 to 15:58:28  2/21/2010                      Page       1
*** All DBCTL transactions ***

                                Avg      Avg      Avg      Avg      Avg      Avg      Avg      Avg      Avg      Avg      Avg
Tran     PSB         #Tasks Response User CPU Dispatch  Suspend PoolWait   ICwait SchedElp DBIOElap PILockEl DBIOcall DLIcalls
                              Time     Time     Time     Time     Time     Time     Time     Time     Time    Count    Count
DLI0     DDLPSB51        16   9.3221    .0255    .5016   8.8205    .0000    .0000    .0104    .0000    .0000        0        0
DLI0     PSB99           13   1.4249    .5201    .7799    .6450    .0000    .0000    .0780    .0000    .0000        0        1
DLI0                     29   5.7820    .2472    .6264   5.1556    .0000    .0000    .0407    .0000    .0000        0        1

DLI1     DDLPSB51         4  26.4267    .0125    .8290  25.5977    .0000    .0000    .0041    .0000    .0000        0        0
DLI1     PSB99            1  95.2870   1.9511  16.4508  78.8363    .0000    .0000    .0050    .0000    .0000        0        1
DLI1                      5  40.1988    .4003   3.9534  36.2454    .0000    .0000    .0043    .0000    .0000        0        0

DLI2     DDLPSB51         4  19.3463    .0125    .2029  19.1433    .0000    .0000    .0040    .0000    .0000        0        0
DLI2     PSB99            1  91.8213   1.8717   2.0128  89.8085    .0000    .0000    .0010    .0000    .0000        0        1
DLI2                      5  33.8413    .3843    .5649  33.2764    .0000    .0000    .0034    .0000    .0000        0        0
```

Figure 22. Performance Summary report: DBCTL activity

Note: IMS Performance Analyzer (IMS PA) can provide a more comprehensive analysis of IMS DBCTL performance.

Example: Application naming: An example of a Performance Summary report produced from CMF performance class data with application naming enabled is shown in Figure 24 on page 43. The report is sorted by transaction ID, application naming transaction ID, and application naming program name.

The following sample Report Forms are provided to help you format the report.

PGAPLSUM
Transactions by application naming program

TRAPLSUM
Transactions by application naming transaction ID

You can edit a sample form, change it and SAVEAS to create a new report form. For example, modify TRAPLSUM by moving unwanted fields below EOR, then SAVEAS TRAPLMOD.

```
                    EDIT SUMMARY Report Form - TRAPLMOD

Title  . . Transactions by Application Transaction ID and Program name (APP
           LNAME)_____________________________________________________________

    Field    Sort                                                  - User Field -
/   Name +   K  O  Type    Fn    Length  Dictionary Definition  Offset  Length
__  TRAN____ K  A  _______ ___        8  TRAN     DFHTASK C001   ___     ___
__  APPLTRAN K  A  _______ ___        4  APPLNAME DFHAPPL C001   ___     ___
__  APPLPROG K  A  _______ ___        8  APPLNAME DFHAPPL C001   ___     ___
__  TASKCNT_        _______ ___        8  TASKCNT  CICSPA  X902   ___     ___
__  RESPONSE        _______ AVE        8  RESP     CICSPA  D901   ___     ___
__  DISPATCH        TIME___ AVE        8  USRDISPT DFHTASK S007   ___     ___
__  CPU_____        TIME___ AVE        8  USRCPUT  DFHTASK S008   ___     ___
__  SUSPEND_        TIME___ AVE        8  SUSPTIME DFHTASK S014   ___     ___
__  DISPWAIT        TIME___ AVE        8  DISPWTT  DFHTASK S102   ___     ___
__  EOR_____        _______ ___                                   ___     ___
__  EOX_____        _______ ___                                   ___     ___
__  RESPONSE        _______ MAX        8  RESP     CICSPA  D901   ___     ___
__  DISPATCH        TIME___ MAX        8  USRDISPT DFHTASK S007   ___     ___
__  DISPATCH        COUNT__ AVE        8  USRDISPT DFHTASK S007   ___     ___
__  CPU_____        COUNT__ AVE        8  USRCPUT  DFHTASK S008   ___     ___
__  SUSPEND_        TIME___ MAX        8  SUSPTIME DFHTASK S014   ___     ___
__  SUSPEND_        COUNT__ AVE        8  SUSPTIME DFHTASK S014   ___     ___
```

Figure 23. SUMMARY Report Form (Application naming)

This produces a report with the following format and provides a summary of activity from each of the main menu options.

```
 V3R2M0                                        CICS Performance Analyzer
                                                 Performance Summary

SUMM0001 Printed at 12:03:45  3/15/2011     Data from 07:30:47  5/29/2010 to 08:35:48  5/29/2010
Transactions by Application Transaction ID and Program name (APPLNAME)

                                      Avg       Avg       Avg       Avg       Avg
Tran     Tran     Program    #Tasks  Response  Dispatch  User CPU  Suspend  DispWait
                                       Time      Time      Time      Time      Time
MENU     TOP1     PROGOPT1        5    1.4249     .0934     .0196  684.379     .0064
MENU     TOP2     PROGOPT2       48    1.0589     .7688     .2039   1.1260     .1046
MENU     TOP3     PROGOPT3        1    2.8065     .0002     .0002    .0029     .0000
MENU     TOP4     PROGOPT4       49    5.7820     .7531     .1997   1.1030     .1025
MENU     TOP5     PROGOPT5        4    3.1749     .0695     .0088    .0191     .0191
```

Figure 24. Performance Summary report: Application naming

Note: The APPLTRAN and APPLPROG fields are only available when application programs invoke the application naming event monitoring points. For more information, see the APPLNAME parameter on the DFHMCT TYPE=INITIAL macro in the *CICS Customization Guide*..

Example: Precision(4) and conversion of numeric fields: Figure 25 on page 44 shows an example of a Performance Summary report with precision to 4 decimal places for clock fields and conversion of storage fields to KB and MB.

The commands to request this report are like the following:

```
CICSPA IN(SMFIN001),
       APPLID(*),
       LINECNT(60),
       FORMAT(':','/'),
       PRECISION(4),
   SUMMARY(OUTPUT(SUMM0001),
       TOTALS(8),
       INTERVAL(24:00:00),
       FIELDS(
              TRAN,
              TASKCNT,
              SC24UHWM(TOT),     * Total <16MB storage
```

```
                                        SC24UHWM(TOT,KB),  * Total <16MB storage in KB's
                                        SC31UHWM(TOT),     * Total >16MB storage
                                        SC31UHWM(TOT,MB),  * Total >16MB storage in MB's
                                        RESPONSE(AVE),
                                        DISPATCH(TIME(AVE)),
                                        CPU(TIME(AVE)),
                                        SUSPEND(TIME(AVE)),
                                        DISPWAIT(TIME(AVE)),
                                        FCWAIT(TIME(AVE))),
                                 TITLE1(
                        'This report illustrates precision and numeric conversion    '))
```

```
 V3R2M0                                          CICS Performance Analyzer
                                                   Performance Summary

SUMM0001 Printed at 12:03:45  3/15/2011     Data from 19:06:30  2/01/2010 to 23:50:44  2/03/2010                      Page       1
This report illustrates precision and numeric conversion

                     Total    Total    Total    Total      Avg      Avg      Avg      Avg      Avg      Avg
Tran       #Tasks SC24UHWM SC24UHWM SC31UHWM SC31UHWM Response Dispatch User CPU  Suspend DispWait  FC Wait
                     Count     KB      Count     MB       Time     Time     Time     Time     Time     Time
DEMM           39  3304032     3226  3658720        3    .6154    .1015    .0733    .5140    .0134    .1831
DEM1          938 38038240    37146 65290528       62    .4187    .0618    .0521    .3569    .0122    .1936
EE00            8   168624      164   147728        0    .0143    .0112    .0012    .0031    .0001    .0029
EE01          248  6119856     5976 12332032       11    .0697    .0159    .0106    .0538    .0071    .0534
EE02          389  8152944     7961 14707472       14    .0157    .0091    .0050    .0065    .0011    .0063
EE03          268  5694816     5561  8823376        8    .0245    .0130    .0055    .0115    .0017    .0100
EE07          101  2126304     2076  3427664        3    .0098    .0063    .0024    .0034    .0007    .0032
EE08           63  1332336     1301  1848384        1    .0105    .0069    .0019    .0036    .0003    .0033
EE11          148  3115584     3042  5221440        4    .0052    .0045    .0012    .0007    .0001    .0006
EE29           33   693792      677  1196480        1    .0360    .0111    .0070    .0249    .0043    .0245
HR00          661  3659296     3573 27345312       26    .3390    .0356    .0286    .3034    .0052    .0752
HY00          933 34252816    33450 13116320       12    .0771    .0122    .0070    .0649    .0025    .0000
HY12          230  7473936     7298  3204848        3    .0396    .0083    .0054    .0313    .0021    .0000
HY14          526 20859344    20370  7263008        6    .0481    .0083    .0059    .0398    .0020    .0000
HY38          432 14556320    14215  5994064        5   3.3657    .0078    .0052   3.3578    .0022    .0000
HY59          297 23323808    22777  4137456        3    .1203    .0116    .0084    .1087    .0036    .0000
NPXF        51943 218217E4  2131030 682439E3      650    .0218    .0050    .0038    .0168    .0014    .0000
NPXR         1108 83417392    81462 27302512       26    .1108    .0123    .0101    .0984    .0039    .0000
VO00         2348 12995184    12690 100638E3       95    .9938    .0266    .0214    .9672    .0050    .0083

Total       60713 245145E4  2394003 988094E3      942    .0965    .0075    .0058    .0890    .0018    .0046
```

Figure 25. Performance Summary report: Precision(4) and conversion of numeric fields

Example: Precision(6) and conversion of numeric fields: The following example is the same report as the previous example in Figure 25 but with microsecond precision.

The commands to request this report are like the following:

```
CICSPA IN(SMFIN001),
       APPLID(*),
       PRECISION(6),
   SUMMARY(OUTPUT(SUMM0001),
       TOTALS(8),
       INTERVAL(24:00:00),
       FIELDS(
              TRAN,
              TASKCNT,
              SC24UHWM(TOT),     * Total <16MB storage
              SC24UHWM(TOT,KB),  * Total <16MB storage in KB's
              SC31UHWM(TOT),     * Total >16MB storage
              SC31UHWM(TOT,MB),  * Total >16MB storage in MB's
              RESPONSE(AVE),
              DISPATCH(TIME(AVE)),
              CPU(TIME(AVE)),
              SUSPEND(TIME(AVE)),
              DISPWAIT(TIME(AVE)),
              FCWAIT(TIME(AVE))),
       TITLE1(
'This report illustrates precision and numeric conversion'))
```

```
 V3R2M0                                          CICS Performance Analyzer
                                                   Performance Summary

SUMM0001 Printed at 12:03:45  3/15/2011     Data from 23:17:59  2/01/2010 to 23:41:30  2/03/2010                      Page       1
This report illustrates precision and numeric conversion

                     Total    Total    Total    Total      Avg      Avg      Avg      Avg      Avg      Avg
Tran       #Tasks SC24UHWM SC24UHWM SC31UHWM SC31UHWM Response Dispatch User CPU  Suspend DispWait  FC Wait
                     Count       KB    Count       MB     Time     Time     Time     Time     Time     Time
DEMM           39  3304032     3226  3658720        3  .615435  .101474  .073271  .513955  .013413  .183122
DEM1          938 38038240    37146 65290528       62  .418662  .061761  .052133  .356893  .012196  .193565
EE00            8   168624      164   147728        0  .014270  .011170  .001214  .003094  .000124  .002936
EE01          248  6119856     5976 12332032       11  .069702  .015891  .010623  .053803  .007066  .053391
EE02          389  8152944     7961 14707472       14  .015651  .009121  .004988  .006521  .001134  .006305
EE03          268  5694816     5561  8823376        8  .024497  .013031  .005464  .011457  .001666  .009987
EE07          101  2126304     2076  3427664        3  .009782  .006338  .002380  .003436  .000726  .003163
EE08           63  1332336     1301  1848384        1  .010454  .006872  .001903  .003574  .000323  .003284
EE11          148  3115584     3042  5221440        4  .005169  .004463  .001165  .000698  .000150  .000576
EE29           33   693792      677  1196480        1  .035991  .011057  .006972  .024928  .004307  .024538
HR00          661  3659296     3573 27345312       26  .339045  .035614  .028619  .303422  .005247  .075227
HY00          933 34252816    33450 13116320       12  .077108  .012230  .006985  .064871  .002507  .000000
HY12          230  7473936     7298  3204848        3  .039579  .008305  .005423  .031267  .002084  .000000
HY14          526 20859344    20370  7263008        6  .048087  .008316  .005873  .039763  .001967  .000000
HY38          432 14556320    14215  5994064        5 3.365655  .007800  .005166 3.357846  .002219  .000000
HY59          297 23323808    22777  4137456        3  .120345  .011609  .008405  .108727  .003608  .000000
NPXF        51943 218217E4  2131030 682439E3      650  .021812  .004965  .003825  .016839  .001363  .000000
NPXR         1108 83417392    81462 27302512       26  .110790  .012350  .010116  .098432  .003871  .000000
VO00         2348 12995184    12690 100638E3       95  .993789  .026573  .021438  .967208  .005024  .008326

Total       60713 245145E4  2394003 988094E3      942  .096514  .007529  .005819  .088977  .001830  .004576
```

Figure 26. Performance Summary report: Precision(6) and conversion of numeric fields

Example: Peak percentile: A sample Report Form is provided to help you format a Performance Summary report with a distribution of response time using peak percentiles. This can be useful for monitoring service level compliance.

RESPPEAK

Response Time Peak Percentiles

You can edit the sample form, change it and SAVEAS to create a new form to tailor the report to the needs of your analysis.

For example, modify RESPPEAK by overtyping the first four RESPONSE fields with the field names CPU, SUSPEND, DISPATCH, and DISPWAIT, and change the function of the next RESPONSE field from 75 to MIN (minimum), then SAVEAS PEAKPERC.

```
                    EDIT SUMMARY Report Form - PEAKPERC

    Field    Sort
/   Name +   K  O Type    Fn   Description
__  TRAN____ K  A _______ ___  Transaction identifier
__  TASKCNT_    _______ ___  Total Task count
__  CPU_____    TIME___ AVE  CPU time
__  SUSPEND_    TIME___ AVE  Suspend time
__  DISPATCH    TIME___ AVE  Dispatch time
__  DISPWAIT    TIME___ AVE  Redispatch wait time
__  RESPONSE    _______ MIN  Transaction response time
__  RESPONSE    _______ 80_  Transaction response time
__  RESPONSE    _______ 85_  Transaction response time
__  RESPONSE    _______ 90_  Transaction response time
__  RESPONSE    _______ 95_  Transaction response time
__  RESPONSE    _______ 98_  Transaction response time
__  RESPONSE    _______ 99_  Transaction response time
__  RESPONSE    _______ MAX  Transaction response time
__  EOR_____    _______ ___  ---------------- End of Report ----------------
```

Figure 27. SUMMARY Report Form (Peak percentiles)

This produces a report of response time peak percentiles in the following format.

```
 V3R2M0                                          CICS Performance Analyzer
                                                   Performance Summary

SUMM0004 Printed at 12:03:45  3/15/2011     Data from 16:20:08 12/15/2010 to 11:28:14 12/16/2010

                       Avg      Avg      Avg      Avg      Min      80%      85%      90%      95%      98%      99%      Max
Tran       #Tasks User CPU  Suspend Dispatch DispWait Response Response Response Response Response Response Response Response
                      Time     Time     Time     Time     Time     Time     Time     Time     Time     Time     Time     Time
CATA           28  .003666  .012189  .086434  .006367  .000273  .263817  .301876  .350137  .421351  .501590  .554952  .866135
CATR           33  .002185  .000693  .014265  .000660  .002807  .024125  .026234  .028909  .032857  .037304  .040262  .047388
CDTS           21  .001264  .003115  .001481  .000030  .003943  .005198  .005335  .005508  .005763  .006051  .006242  .006927
CEDA           67  .055209 26.48349 1.547822  .004297  .451570 134.2897 158.7721 189.8167 235.6265 287.2413 321.5671 954.6099
CEDF           68  .001127 3.187671  .014316  .000323  .000203 12.11531 14.16897 16.77309 20.61578 24.94540 27.82476 58.90035
CEJR          186  .550488 4.315791 8.343663  .048935  .001269 57.86544 68.28108 81.48849 100.9776 122.9363 137.5396 479.1123
CESD           32  .001816  .249016  .029644  .076466  .000749  .637936  .720713  .825678  .980566 1.155080 1.271139 1.375740
CGRP           43  .002864  .846599  .049918  .818119  .047297 1.703957 1.889993 2.125893 2.473990 2.866198 3.127032 3.139892
CITS           40  .001177  .004175  .001746  .000052  .002395  .008443  .009023  .009758  .010842  .012064  .012876  .016951
CJTR           10  .000899  .022832  .011030  .021589  .005166  .071792  .080529  .091607  .107955  .126374  .138624  .154776
```

Figure 28. Performance Summary report: Peak percentiles

In this example, the global report option **PRECISION(6)** was specified. To refine your analysis further, you can use Performance Alerts.

Example: Performance Alerts Summary: This is an example of performance alert reporting, useful for monitoring compliance to Service Level Agreements and CICS transaction performance standards.

The commands to request this report are like the following:

```
CICSPA IN(SMFIN001),
       APPLID(*),
       PRECISION(4),
   SUMMARY(OUTPUT(SUMM0002),
       TOTALS(8),
       INTERVAL(00:01:00),
       ALERTDEF(ALERT08),
       SEVERITY(ELIGIBLE),
       FIELDS(TRAN(ASCEND),
              TASKCNT,
              ALERT(SEV(CRITICAL,PERCENT)),
              ALERT(SEV(WARNING,PERCENT)),
              ALERT(SEV(INFO,PERCENT)),
              RESPONSE(AVE),
              RESPONSE(SEV(CRITICAL,PERCENT)),
              RESPONSE(SEV(WARNING,PERCENT)),
              RESPONSE(SEV(INFO,PERCENT)),
              DISPATCH(TIME(AVE)),
              CPU(TIME(AVE)),
              CPU(TIME(SEV(CRITICAL,COUNT))),
              CPU(TIME(SEV(WARNING,COUNT))),
              CPU(TIME(SEV(INFO,COUNT))))
```

This example shows the use of the ALERT field. It shows the percentage of transactions for each severity level for the summary key. It also shows Response Time alerts as percentages (with two decimal places), while User CPU Time alerts are shown as counts (whole numbers with no decimal places).

```
 V3R2M0                                          CICS Performance Analyzer
                                                  Performance Summary

SUMM0002 Printed at 17:31:29  4/21/2010     Data from 07:50:50  3/26/2009 to 07:54:23  3/26/2009
```

Tran	#Tasks	Critical ALERT	Warning ALERT	Info ALERT	Avg Response Time	Critical Response Time	Warning Response Time	Info Response Time	Avg Dispatch Time	Avg User CPU Time	Critical User CPU Time	Warning User CPU Time	Info User CPU Time
CATA	1	.00	.00	100.00	.0097	.00	.00	.00	.0074	.0028	0	0	1
CFQR	1	100.00	.00	.00	212.5694	100.00	.00	.00	.0001	.0001	0	0	0
CFQS	1	100.00	.00	100.00	212.5693	100.00	.00	.00	.0149	.0011	0	0	1
CFTL	1	.00	.00	100.00	.0810	.00	.00	100.00	.0170	.0041	0	0	1
CGRP	1	.00	100.00	100.00	.1452	.00	100.00	.00	.0274	.0015	0	0	1
CISC	2	.00	.00	100.00	.0699	.00	.00	100.00	.0096	.0008	0	0	1
CISD	1	.00	.00	.00	.0006	.00	.00	.00	.0001	.0001	0	0	0
CISE	1	100.00	.00	100.00	207.0152	100.00	.00	.00	.0102	.0011	0	0	1
CISR	1	100.00	.00	100.00	207.0153	100.00	.00	.00	.0122	.0011	0	0	1
CJSR	1	.00	.00	100.00	.0360	.00	.00	100.00	.0150	.0011	0	0	1
CKAM	1	100.00	.00	100.00	197.1525	100.00	.00	.00	.0187	.0035	0	0	1
CQRY	1	.00	.00	100.00	.0112	.00	.00	100.00	.0048	.0014	0	0	1
CRLR	1	.00	.00	100.00	.0485	.00	.00	100.00	.0126	.0010	0	0	0
CRSQ	1	.00	.00	100.00	.0351	.00	.00	100.00	.0155	.0010	0	0	1
CRTP	1	.00	.00	100.00	.0080	.00	.00	.00	.0056	.0016	0	0	1
CSAC	1	.00	100.00	.00	.5235	.00	100.00	.00	.0003	.0003	0	0	0
CSFU	1	.00	100.00	.00	.8119	.00	100.00	.00	.7219	.0415	0	1	0
CSHQ	1	100.00	.00	100.00	192.6462	100.00	.00	.00	.0922	.0091	0	0	1
CSKL	1	100.00	100.00	.00	191.6213	100.00	.00	.00	190.8965	.0134	0	1	0
CSNC	1	100.00	.00	100.00	205.4532	100.00	.00	.00	.0737	.0022	0	0	1
CSNE	2	50.00	.00	50.00	99.8076	50.00	.00	.00	.0189	.0020	0	0	1
CSSY	13	15.38	46.15	69.23	1.3247	15.38	46.15	23.08	.2042	.0457	1	0	8
CSTE	1	.00	.00	100.00	.0490	.00	.00	100.00	.0371	.0032	0	0	1
CSZI	1	100.00	.00	100.00	209.1438	100.00	.00	.00	.0682	.0077	0	0	1
CWBG	1	.00	.00	100.00	.0086	.00	.00	.00	.0084	.0016	0	0	1
CXRE	1	.00	.00	100.00	.0672	.00	.00	100.00	.0121	.0010	0	0	1
Total	40	30.00	25.00	75.00	51.3500	30.00	22.50	30.00	4.8696	.0175	1	2	27

Figure 29. Performance Summary report: Performance alerts

In this example, transaction code (Tran) is the summary key. For transaction code CSSY, there are 13 transactions, and we observe:

- 15.38% (2 transactions) had Critical alerts, 46.16% (6 transactions) had Warning alerts, and 69.23% (9 transactions) had Informational alerts.
- Of the Critical alerts, 15.38% (2 transactions) were for Response Time, while 1 transaction (7.69%) was for User CPU Time. Since the Critical ALERT total is 15.38%, we therefore know that 1 CSSY transaction had Critical alerts for both Response Time and User CPU Time.
- Of the Informational alerts, 23.08% (3 transactions) were for Response Time, while 8 transactions (61.54%) were for User CPU Time. Since the Info ALERT total is 69.23% (9 transactions), we therefore know that 2 transactions had Informational alerts for both Response Time and User CPU Time.

To create an extract file, add the DD statement for the extract data set to the JCL and add the corresponding DDNAME operand to the SUMMARY command.

```
Tran;#Tasks;ALERT Critical;ALERT Warning;ALERT Info;Response Time Avg;Response Time Critical;Response Time Warning;Response Time Info...
CATA    ;       1;     .00;     .00;  100.00;   .0097;     .00;     .00;     .00;   .0074;   .0028;       0;       0;       1;
CFQR    ;       1;  100.00;     .00;     .00;212.5694;  100.00;     .00;     .00;   .0001;   .0001;       0;       0;       0;
CFQS    ;       1;  100.00;     .00;  100.00;212.5693;  100.00;     .00;     .00;   .0149;   .0011;       0;       0;       1;
CFTL    ;       1;     .00;     .00;  100.00;   .0810;     .00;     .00;  100.00;   .0170;   .0041;       0;       0;       1;
CGRP    ;       1;     .00;  100.00;  100.00;   .1452;     .00;  100.00;     .00;   .0274;   .0015;       0;       0;       1;
CISC    ;       2;     .00;     .00;  100.00;   .0699;     .00;     .00;  100.00;   .0096;   .0008;       0;       0;       1;
CISD    ;       1;     .00;     .00;     .00;   .0006;     .00;     .00;     .00;   .0001;   .0001;       0;       0;       0;
CISE    ;       1;  100.00;     .00;  100.00;207.0152;  100.00;     .00;     .00;   .0102;   .0011;       0;       0;       1;
CISR    ;       1;  100.00;     .00;  100.00;207.0153;  100.00;     .00;     .00;   .0122;   .0011;       0;       0;       1;
CJSR    ;       1;     .00;     .00;  100.00;   .0360;     .00;     .00;  100.00;   .0150;   .0011;       0;       0;       1;
CKAM    ;       1;  100.00;     .00;  100.00;197.1525;  100.00;     .00;     .00;   .0187;   .0035;       0;       0;       1;
CQRY    ;       1;     .00;     .00;  100.00;   .0112;     .00;     .00;  100.00;   .0048;   .0014;       0;       0;       1;
...
```

Figure 30. Performance Summary extract: Performance alerts

Performance Totals report

The Performance Totals report provides detailed statistics of all fields in the CMF performance class records. The statistics are accumulated during input file processing, and printed at the End of File.

You can request statistics from all available records, or you can specify selection criteria to request statistics from only the records that meet specific requirements.

Report command

The Performance Totals report can be requested from a Report Set in the CICS PA dialog. Select the **Totals** report in the **Performance Reports** category.

In batch, the `TOTAL` command is used to request the Performance Totals report.

The command to produce the default report is:

```
CICSPA TOTAL
```

To tailor the report, you can specify report options as follows:

```
CICSPA TOTAL(
        [OUTPUT(ddname),]
        [LINECOUNT(nnn),]
        [TITLE1('...sub-heading left ...'),]
        [TITLE2('...sub-heading right...'),]
        [SELECT(PERFORMANCE(INCLUDE|EXCLUDE(field1(values1),...),...))])
```

Report content

The Performance Totals report has four parts:

1. **CICS System Statistics.** Statistics about the CICS system as a whole, including:
   - CPU and Dispatch times
   - Performance Record and Task counts
2. **CPU and Dispatch Statistics.** Breakdown of CPU, Dispatch, and Suspend counts and elapsed time.
3. **Resource Utilization Statistics.** Each field in the performance record is summarized:
   - For Clock fields, the count and time components are broken down.
   - For Count fields, the count values are reported.
4. **User Field Statistics.** Statistics for the User Fields defined in the CMF performance class records.

Part 1: CICS system statistics

The first part of the Performance Totals report provides statistics about the CICS system as a whole.

```
 V3R2M0                                                CICS Performance Analyzer
                                                          Performance Totals

TOTL0001 Printed at 12:03:45  3/15/2011    Data from 16:20:08 12/15/2009 to 11:28:14 12/16/2009                      Page       1


                                        Dispatched Time           CPU Time
                                      DD HH:MM:SS    Secs   DD HH:MM:SS    Secs

Total Elapsed Run Time                  19:08:07   68887


From Selected Performance Records

QR Dispatch/CPU Time                    00:23:05    1385      00:01:10      70
MS Dispatch/CPU Time                    00:30:59    1859      00:00:19      19
                                        --------   -----      --------  ------
 TOTAL (QR + MS)                        00:54:05    3245      00:01:29      89

L8 CPU Time                                                   00:00:01       1
J8 CPU Time                                                   00:02:22     142
S8 CPU Time                                                   00:00:00       0
T8 CPU Time                                                   00:00:00       0
X8 CPU Time                                                   00:00:00       0
                                        --------   -----      --------  ------
 TOTAL (L8 + J8 + S8 + T8 + X8)         00:04:04     244      00:02:22     142

L9 CPU Time                                                   00:00:00       0
J9 CPU Time                                                   00:00:09       9
X9 CPU Time                                                   00:00:00       0
                                        --------   -----      --------  ------
 TOTAL (L9 + J9 + X9)                   00:00:12      12      00:00:09       9

                                        --------   -----      --------  ------
 Total CICS TCB Time                    00:58:21    3501      00:04:01     241



Total Performance Records (Type C)                     0
Total Performance Records (Type D)                   247
Total Performance Records (Type F)                   327
Total Performance Records (Type S)                     0
Total Performance Records (Type T)                 15566
                                                --------                                                        --------
Total Performance Records (Selected)                16140          Total Performance Records                       16140
```

Figure 31. Performance Totals report (part 1): CICS system statistics

The columns are:

Dispatched Time
The total elapsed time presented in days, hours, minutes, seconds, and then as total seconds.

CPU Time
The total CPU time presented in days, hours, minutes, seconds, and then as total seconds.

The rows are:

Total Elapsed Run Time
Performance Totals report interval or elapsed time (first performance record start time to last performance record stop time).

From Selected Performance Records
The CICS TCB mode data.

QR Dispatch/CPU Time
The total CICS TCB mode QR dispatch and CPU time accumulated from the selected performance class records.

MS Dispatch/CPU Time
The total CICS TCB mode RO, CO, FO, RP, SZ, SL, and SO dispatch and CPU time from the selected performance class records.

Total (QR + MS)
The total CICS TCB mode QR, RO, CO, FO, RP, SZ, SL, and SO dispatch and CPU time accumulated from the selected performance class records.

L8 CPU Time
The total CICS TCB mode L8 CPU Time accumulated from the selected performance class records.

J8 CPU Time
The total CICS TCB mode J8 CPU time accumulated from the selected performance class records.

S8 CPU Time
The total CICS TCB mode S8 CPU time accumulated from the selected performance class records.

T8 CPU Time
The total CICS TCB mode T8 CPU time accumulated from the selected performance class records.

X8 CPU Time
The total CICS TCB mode X8 CPU time accumulated from the selected performance class records.

Total (L8 + J8 + S8 + T8 + X8)
The total CICS TCB mode L8, J8, S8, T8, and X8 dispatch and CPU time accumulated from the selected performance class records.

L9 CPU Time
The total CICS TCB mode L9 CPU time accumulated from the selected performance class records.

J9 CPU Time
The total CICS TCB mode J9 CPU time accumulated from the selected performance class records.

X9 CPU Time
The total CICS TCB mode X9 CPU time accumulated from the selected performance class records.

Total (L9 + J9 + X9)
The total CICS TCB mode L9, J9, and X9 dispatch and CPU time accumulated from the selected performance class records.

Total CICS TCB Time
The total CICS TCB time, all TCB modes dispatch and CPU time accumulated from the selected performance class records.

Total Performance Records (Type C)
The total number of **Converse** performance class records selected.

Total Performance Records (Type D)
The total number of **Deliver** performance class records selected.

Total Performance Records (Type F)
The total number of **Frequency** performance class records selected.

Total Performance Records (Type S)
The total number of **Syncpoint** performance class records selected.

Total Performance Records (Type T)
The total number of **Terminate** performance class records selected.

Total Performance Records (Selected)
The total number of performance class records selected.

Total Performance Records
The total number of performance class records.

For more detailed descriptions of the performance class data fields, see “CMF performance class data fields” on page 263.

Part 2: CPU and dispatch statistics

The second part of the Performance Totals report displays the total, average per task, and maximum per task for the CPU, Dispatch, and Suspend counts and elapsed time. Time values are represented in seconds, with millisecond precision.

```
 V3R2M0                                          CICS Performance Analyzer
                                                    Performance Totals

TOTL0001 Printed at 12:03:45  3/15/2011    Data from 16:20:08 12/15/2009 to 11:28:14 12/16/2009                      Page       2


                                                 ...... C  O  U  N  T  S ......   ........... T  I  M  E ...........
From Selected Performance Records                   Total   Avg/Task   Max/Task       Total    Avg/Task     Max/Task


Dispatch Time                                      108129        6.7       1587        3456        .214      756.551
CPU Time                                                                                223        .014        6.233
RLS CPU (SRB) Time                                                                        0        .000         .000
WebSphere MQ API (SRB) CPU Time                                                           0        .000         .000
Suspend Time                                       108249        6.7       1587      923449      57.215      +++.+++
Dispatch Wait Time                                  92456        5.7       1586         334        .021        7.393
Dispatch Wait Time (QR Mode)                        69952        4.3       1065          36        .002        7.393
Response (-TCWait for Type C)                                                             0        .000         .000
Response (All Selected Tasks)                                                       1955791     121.177      +++.+++
QR Dispatch Time                                    85418        5.3       1066        1370        .085      756.549
MS Dispatch Time                                    17876        1.1        227        1855        .115      478.739
RO Dispatch Time                                     4746         .3         40         304        .019       13.317
QR CPU Time                                                                              69        .004        1.699
MS CPU Time                                                                              19        .001         .185
RO CPU TIME                                                                              12        .001         .159
L8 CPU Time                                                                               1        .000         .470
L9 CPU Time                                                                               0        .000         .000
J8 CPU Time                                                                             124        .008        6.221
J9 CPU Time                                                                               9        .001        5.174
S8 CPU Time                                                                               0        .000         .000
T8 CPU Time                                                                               0        .000         .000
X8 CPU Time                                                                               0        .000         .000
X9 CPU Time                                                                               0        .000         .000
z/OS XML System Services CPU Time                                                         0        .000         .000
```

Figure 32. Performance Totals report (part 2): CPU and dispatch statistics

The individual count fields might not always add up to the total count field. There are two reasons for this:

1. Some individual fields might not have been collected for the duration of the report. The counts are, however, still reflected in the total count (FCTOTAL).
2. There might be a differential due to another count, which is not collected in the CMF performance class record and not printed on the report. This other count is, however, reflected in the total count.

The information in this part of the report includes:

Total
Total count or time value (in seconds) for all the records selected, based on the selection criteria provided.

Avg/Task
Average count or time per task computed by dividing the count or time by the total number of selected tasks.

Max/Task
The largest count or time value that was recorded for any one task.

A value of +++.+++ is substituted when the calculated value exceeds the maximum permitted in this column.

Response (minus TC Wait for Type C)
The internal response time for conversational tasks.

Response (All Selected Tasks)
The total time. This is the accumulation of the response times (Stop Time minus Start Time) for all selected conversational (Type C) minus the Terminal Control I/O Wait Time for those tasks.

Part 3: Resource utilization statistics

The third part of the Performance Totals report displays the count and time values (total, average per task, and maximum per task) from the CMF performance class records for the resource utilization fields. Time values are represented in seconds, with millisecond precision.

Note: Some of the fields might contain large values and be represented in exponential format. For example, 2 834 000 might be shown as 2834E3.

Some fields might show +++.+++ in place of a value that is too large.

Figure 33. Performance Totals report (part 3): Resource utilization statistics

```
 V3R2M0                                                CICS Performance Analyzer
                                                          Performance Totals

TOTL0001 Printed at 12:03:45  3/15/2011    Data from 16:20:08 12/15/2009 to 11:28:14 12/16/2009   Page       3


                                                     ...... C  O  U  N  T  S ......   ........... T  I  M  E ...........
From Selected Performance Records                       Total   Avg/Task   Max/Task       Total    Avg/Task     Max/Task

FCWAIT   File I/O wait time                              5378         .3        294          15        .001        2.086
RLSWAIT  RLS File I/O wait time                            8         .0          1           0        .000         .022
TSWAIT   VSAM TS I/O wait time                            31         .0          3           0        .000         .005
TSSHWAIT Asynchronous Shared TS wait time                  0         .0          0           0        .000         .000
JCWAIT   Journal I/O wait time                          2108         .1         66           6        .000         .870
TDWAIT   VSAM transient data I/O wait time                 0         .0          0           0        .000         .000
IRWAIT   MRO link wait time                             1493         .1         70          76        .005        4.863
CFDTWAIT CF Data Table access requests wait time           0         .0          0           0        .000         .000
CFDTSYNC CF Data Table syncpoint wait time                 0         .0          0           0        .000         .000
RUNTRWAI BTS run Process/Activity wait time                0         .0          0           0        .000         .000
SYNCDLY  SYNCPOINT parent request wait time                0         .0          0           0        .000         .000
RMITIME  Resource Manager Interface (RMI) elapsed time    22391        1.4        112        5395        .334     4458.381
RMISUSP  Resource Manager Interface (RMI) suspend time      139         .0         42        5389        .334     4458.379
JVMITIME JVM initialize elapsed time                        543         .0         30          32        .002        5.159
JVMTIME  JVM elapsed time                                  1514         .1         90         227        .014       10.493
JVMRTIME JVM reset elapsed time                             661         .0         40           1        .000         .111
JVMSUSP  JVM suspend time                                  6574         .4        562          13        .001        2.873
JVMTHDWT JVM server thread wait time                       0         .0          0           0        .000         .000
DB2CONWT DB2 Connection wait time                          0         .0          0           0        .000         .000
DB2RDYQW DB2 Thread wait time                              0         .0          0           0        .000         .000
DB2WAIT  DB2 SQL/IFI wait time                             0         .0          0           0        .000         .000
IMSWAIT  IMS (DBCTL) wait time                             0         .0          0           0        .000         .000
WMQGETWT WebSphere MQ GETWAIT wait time                    0         .0          0           0        .000         .000
TCWAIT   Terminal wait for input time                   2556         .2        194       75437       4.674      +++.+++
LU61WAIT LU6.1 wait time                                   0         .0          0           0        .000         .000
LU62WAIT LU6.2 wait time                                 750         .0         53           6        .000        1.471
SZWAIT   FEPI services wait time                           0         .0          0           0        .000         .000
SOWAIT   Inbound Socket I/O wait time                   2904         .2         47        1000        .062      186.623
OSOWAIT  Outbound Socket I/O Wait Time                     0         .0          0           0        .000         .000
ISWAIT   IPCONN link wait time                             0         .0          0           0        .000         .000
RQRWAIT  Request Receiver Wait Time                        0         .0          0           0        .000         .000
RQPWAIT  Request Processor Wait Time                     173         .0         23          12        .001        2.847
DSPDELAY First dispatch wait time                      15467        1.0          2           9        .001         .793
TCLDELAY First dispatch TCLSNAME wait time                 0         .0          0           0        .000         .000
MXTDELAY First dispatch MXT wait time                      0         .0          0           0        .000         .000
ENQDELAY Local Enqueue wait time                           8         .0          1         119        .007      119.230
GNQDELAY Global Enqueue wait time                          0         .0          0           0        .000         .000
ICDELAY  Interval Control (IC) wait time                  49         .0          2          78        .005        5.212
GIVEUPWT Give up control wait time                      9053         .6        127           4        .000        1.330
WAITCICS CICS ECB wait time                              156         .0         88        3552        .220     3521.733
WAITEXT  External ECB wait time                         2409         .1         64       34684       2.149     4458.482
PTPWAIT  3270 Bridge Partner wait time                     0         .0          0           0        .000         .000
RRMSWAIT Resource Recovery Services indoubt wait time      0         .0          0           0        .000         .000
LOCKDLAY Lock Manager (LM) wait time                     665         .0         24         791        .049       29.926
DSTCBMWT Dispatcher TCB Mismatch wait time                 0         .0          0           0        .000         .000
MAXOTDLY Maximum Open TCB delay time                       0         .0          0           0        .000         .000
MAXJTDLY Maximum JVM TCB delay time                        0         .0          0           0        .000         .000
MAXSTDLY Maximum SSL TCB delay time                        0         .0          0           0        .000         .000
MAXTTDLY Maximum JVM server thread TCB delay time          0         .0          0           0        .000         .000
MAXXTDLY Maximum XPLink TCB delay time                     0         .0          0           0        .000         .000
DSMMSCWT DS storage constraint wait time                   0         .0          0           0        .000         .000
PCLOADTM Program Library wait time                      3094         .2         31          63        .004        2.761
```

SYNCTIME	SYNCPOINT processing time	16354	1.0	33	383	.024	252.070
OTSINDWT	OTS Indoubt Wait time	0	.0	0	0	.000	.000
EXWAIT	Exception Conditions wait time	1	.0	1	0	.000	.000
DSCHMDLY	Redispatch wait time caused by change-TCB mode	28019	1.7	1314	177	.011	3.041
EICTOTCT	EXEC CICS requests	0	.0	0	0	.000	.000
ECEFOPCT	Event Filter operations	0	.0	0	0	.000	.000
ECEVNTCT	Events captured	0	.0	0	0	.000	.000
ECSEVCCT	SIGNAL EVENT requests	0	.0	0	0	.000	.000
ECSIGECT	SIGNAL EVENT requests	0	.0	0	0	.000	.000
TCMSGIN1	Messages received count	3307	.2	195			
TCCHRIN1	Terminal characters received count	139647	8.7	8053			
TCMSGOU1	Messages sent count	3612	.2	195			
TCCHROU1	Terminal characters sent count	1290689	80.0	76437			
TCMSGIN2	Messages received from LU6.1	0	.0	0			
TCCHRIN2	LU6.1 characters received count	0	.0	0			
TCMSGOU2	Messages sent to LU6.1	0	.0	0			
TCCHROU2	LU6.1 characters sent count	0	.0	0			
TCALLOC	TCTTE ALLOCATE requests	230	.0	10			
TCM62IN2	LU6.2 messages received count	0	.0	0			
TCC62IN2	LU6.2 characters received count	0	.0	0			
TCM62OU2	LU6.2 messages sent count	227	.0	4			
TCC62OU2	LU6.2 characters sent count	3279	.2	53			
ISALLOC	Allocate Session requests for sessions on IP	0	.0	0			
FCADD	File ADD requests	803	.0	30			
FCBROWSE	File Browse requests	166097	10.3	9425			
FCDELETE	File DELETE requests	855	.1	30			
FCGET	File GET requests	5439	.3	163			
FCPUT	File PUT requests	90	.0	10			
FCTOTAL	File Control requests	197898	12.3	9682			
FCAMCT	File access-method requests	201247	12.5	9697			
TDGET	Transient data GET requests	261	.0	18			
TDPUT	Transient data PUT requests	128312	7.9	4449			
TDPURGE	Transient data PURGE requests	33	.0	3			
TDTOTAL	Transient data Total requests	128606	8.0	4449			
TSGET	Temporary Storage GET requests	574	.0	27			
TSPUTAUX	Auxiliary TS PUT requests	497	.0	20			
TSPUTMAI	Main TS PUT requests	782	.0	20			
TSTOTAL	TS Total requests	2509	.2	52			
BMSMAP	BMS MAP requests	24	.0	1			
BMSIN	BMS IN requests	170	.0	10			
BMSOUT	BMS OUT requests	521	.0	10			
BMSTOTAL	BMS Total requests	721	.0	20			
JNLWRITE	Journal write requests	31	.0	3			
LOGWRITE	Log Stream write requests	2088	.1	66			
ICSTART	Interval Control START or INITIATE requests	700	.0	6			
ICTOTAL	Interval Control requests	13191	.8	19			
SC24CGET	CDSA GETMAINs below 16MB	4133	.3	111			
SC31CGET	ECDSA GETMAINs above 16MB	343382	21.3	13743			
SC24CHWM	CDSA HWM below 16MB	498640	30.9	79056			
SC31CHWM	ECDSA HWM above 16MB	33627E4	20834.5	144160			
SC24COCC	CDSA Storage Occupancy below 16MB	22665	1.4	3497			
SC31COCC	ECDSA Storage Occupancy above 16MB	808635	50.1	250095			
SC24UGET	UDSA GETMAINs below 16MB	1055	.1	35			
SC31UGET	EUDSA GETMAINs above 16MB	5776	.4	1358			
SC24UHWM	UDSA HWM below 16MB	3202336	198.4	265920			
SC31UHWM	EUDSA HWM above 16MB	10065E4	6235.9	8574576			
SC24UOCC	UDSA Storage Occupancy below 16MB	1005	.1	274			
SC31UOCC	EUDSA Storage Occupancy above 16MB	324906	20.1	102275			
SC24SGET	CDSA/SDSA GETMAINs below 16MB	421	.0	8			
SC24GSHR	CDSA/SDSA storage GETMAINed below 16MB	9317232	577.3	208144			
SC24FSHR	CDSA/SDSA storage FREEMAINed below 16MB	945872	58.6	74848			
SC31SGET	ECDSA/ESDSA GETMAINs above 16MB	4158	.3	122			
SC31GSHR	ECDSA/ESDSA storage GETMAINed above 16MB	57478E3	3561.2	860928			
SC31FSHR	ECDSA/ESDSA storage FREEMAINed above 16MB	60722E3	3762.2	301632			
PCLINK	Program LINK requests	274370	17.0	9357			
PCLOAD	Program LOAD requests	3276	.2	39			
PCXCTL	Program XCTL requests	35	.0	1			
PCLURM	Program LINK URM requests	637	.0	28			
PCDPL	Distributed Program Link (DPL) requests	1	.0	1			
PCSTGHWM	Program Storage HWM above and below 16MB	20157E5	124886.3	9231512			
PC24BHWM	Program Storage HWM below 16MB	56092E3	3475.3	48008			
PC31AHWM	Program Storage HWM above 16MB	19612E5	121511.4	9183504			
PC24CHWM	Program Storage (CDSA) HWM below 16MB	132680	8.2	11000			
PC31CHWM	Program Storage (ECDSA) HWM above 16MB	2385752	147.8	38048			
PC24SHWM	Program Storage (SDSA) HWM below 16MB	541336	33.5	40800			
PC31SHWM	Program Storage (ESDSA) HWM above 16MB	1773944	109.9	60536			
PC24RHWM	Program Storage (RDSA) HWM below 16MB	55418E3	3433.6	48008			
PC31RHWM	Program Storage (ERDSA) HWM above 16MB	19575E5	121283.3	9168704			
DB2REQCT	DB2 requests	424	.0	111			
IMSREQCT	IMS (DBCTL) requests	0	.0	0			
WMQREQCT	Number of WebSphere MQ requests	0	.0	0			
TCBATTCT	TCBs attached count	66	.0	2			
DSTCBHWM	CICS Dispatcher TCB HWM	182	.0	2			
CFCAPI	OO Foundation Class requests	1445	.1	128			
SYNCPT	SYNCPOINT requests	16349	1.0	33			
SOEXTRCT	EXTRACT TCP/IP and CERTIFICATE requests	0	.0	0			
SOCNPSCT	Create Non-Persistent Outbound Socket reqs	94	.0	10			
SOCPSCT	Create Persistent Outbound Socket requests	0	.0	0			
SORCV	Outbound Sockets RECEIVE requests	815	.1	69			
SOSEND	Outbound Sockets SEND requests	241	.0	23			

SOTOTAL	Socket Total requests	6740	.4	172
SOCHRIN	Outbound Sockets characters received count	141925	8.8	7890
SOCHROUT	Outbound Sockets characters sent count	98167	6.1	11419
SOMSGIN1	Inbound Sockets RECEIVE requests	1540	.1	8
SOMSGOU1	Inbound Sockets SEND requests	2225	.1	5
SOCHRIN1	Inbound Sockets characters received count	626471	38.8	3464
SOCHROU1	Inbound Sockets characters sent count	984214	61.0	40584
WBEXTRCT	Web EXTRACT requests	53	.0	2
WBBROWSE	Web Browse requests	43	.0	17
WBREAD	Web READ requests	31	.0	2
WBWRITE	Web WRITE requests	10	.0	1
WBRCV	Web RECEIVE requests	51	.0	2
WBSEND	Web SEND requests	34	.0	1
WBTOTAL	Web Total requests	369	.0	27
WBCHRIN	Web characters received count	1750	.1	100
WBCHROUT	Web characters sent count	0	.0	0
WBREPRCT	Web Temporary Storage Repository read requests	185	.0	6
WBREPWCT	Web Temporary Storage Repository write requests	1040	.1	10
DHCREATE	Document Handler CREATE requests	44	.0	2
DHDELETE	Document Handler DELETE requests	0	.0	0
DHINSERT	Document Handler INSERT requests	0	.0	0
DHSET	Document Handler SET requests	0	.0	0
DHRETRVE	Document Handler RETRIEVE requests	44	.0	2
DHTOTAL	Document Handler Total requests	122	.0	5
DHTOTDCL	Total length of all documents created	35120	2.2	13507
EJBACTIV	Number of Bean State Activation requests	0	.0	0
EJBPASIV	Number of Bean State Passivation requests	0	.0	0
EJBCREAT	Number of Bean Creation requests	0	.0	0
EJBREMOV	Number of Bean Removal requests	0	.0	0
EJBMETHD	Number of EJB Method Calls	0	.0	0
EJBTOTAL	Total Number of EJB requests	0	.0	0
SOBYENCT	Secure Socket bytes encrypted count	0	.0	0
SOBYDECT	Secure Socket bytes decrypted count	0	.0	0
BARSYNCT	BTS synchronous Process/Activity count	0	.0	0
BARASYCT	BTS asynchronous Process/Activity count	0	.0	0
BALKPACT	BTS Link Process/Activity count	0	.0	0
BADPROCT	BTS Define Process requests	0	.0	0
BADACTCT	BTS Define Activity requests	0	.0	0
BARSPACT	BTS Reset Process/Activity requests	0	.0	0
BASUPACT	BTS Suspend Process/Activity requests	0	.0	0
BARMPACT	BTS Resume Process/Activity requests	0	.0	0
BADCPACT	BTS Cancel Process/Activity requests	0	.0	0
BAACQPCT	BTS Acquire Process/Activity requests	0	.0	0
BATOTPCT	BTS Total Process/Activity requests	0	.0	0
BAPRDCCT	BTS Process Data Containers requests	0	.0	0
BAACDCCT	BTS Activity Data Containers requests	0	.0	0
BATOTCCT	BTS Process/Activity Data Container requests	0	.0	0
BARATECT	BTS Retrieve-Reattach Event requests	0	.0	0
BADFIECT	BTS Define-Input Event requests	0	.0	0
BATIAECT	BTS TIMER Event requests	0	.0	0
BATOTECT	BTS Event-related requests	0	.0	0
SZALLOC	Conversations allocated count	0	.0	0
SZRCV	FEPI RECEIVE requests	0	.0	0
SZSEND	FEPI SEND requests	0	.0	0
SZSTART	FEPI START requests	0	.0	0
SZTOTAL	FEPI API and SPI requests	0	.0	0
SZCHRIN	FEPI characters received count	0	.0	0
SZCHROUT	FEPI characters sent count	0	.0	0
SZALLCTO	Allocate conversation time-out count	0	.0	0
SZRCVTO	Receive Data time-out count	0	.0	0
PCDLCSDL	Container data length for DPL reqs with CHANNEL	0	.0	0
PCDLCRDL	Container data length for DPL RETURN w/ CHANNEL	0	.0	0
PCLNKCCT	LINK requests with CHANNEL option	5	.0	2
PCXCLCCT	XCTL requests with CHANNEL option	0	.0	0
PCDPLCCT	DPL requests with CHANNEL option	0	.0	0
PCRTNCCT	Program RETURN requests with CHANNEL option	0	.0	0
PCRTNCDL	Container data length for RETURN with CHANNEL	0	.0	0
ICSTACCT	Local IC START requests with CHANNEL option	0	.0	0
ICSTACDL	Container data len for Local IC START w/ CHANNEL	0	.0	0
ICSTRCCT	Remote IC START requests with CHANNEL option	0	.0	0
ICSTRCDL	Container data len for Remot IC START w/ CHANNEL	0	.0	0
WBREDOCT	CICS Web Support READ HTTPHEADER requests	1	.0	1
WBWRTOCT	CICS Web Support WRITE HTTPHEADER requests	7	.0	1
WBBRWOCT	CICS Web Support BROWSE HTTPHEADER requests	0	.0	0
WBRCVIN1	CICS Web Support RECEIVE and CONVERSE requests	32	.0	10
WBCHRIN1	CICS Web Support RECEIVE and CONVERSE chars	8625	.5	1777
WBSNDOU1	CICS Web Support SEND and CONVERSE requests	29	.0	10
WBCHROU1	CICS Web Support SEND and CONVERSE chars	11528	.7	2187
WBPARSCT	CICS Web Support PARSE URL requests	41	.0	24
TIASKTCT	ASKTIME requests	44	.6	22
TITOTCT	ASKTIME, CONVERTTIME and FORMATTIME requests	92	1.2	31
BFDGSTCT	Built-in function BIF DIGEST requests	0	.0	0
BFTOTCT	Total Built-in (BIF) function requests	0	.0	0
WBIWBSCT	CICS INVOKE WEBSERVICE requests	14	.0	1
WBISSFCT	INVOKE SERVICE request SOAP faults received	0	.0	0
WBSFCRCT	SOAPFAULT CREATE requests	0	.0	0
WBSFTOCT	SOAPFAULT ADD, CREATE and DELETE requests	0	.0	0
MLXMLTCT	Application data TRANSFORM requests	11	.1	11
MLXSSTDL	Document length parsed - z/OS System Services	3071	39.4	3071
WBSREQBL	SOAP request SOAP body length	0	.0	0

```
WBSRSPBL SOAP response SOAP body length                          0         .0          0
WSACBLCT WSACONTEXT BUILD requests                               0         .0          0
WSACGTCT WSACONTEXT GET requests                                 0         .0          0
WSAEPCCT WSAEPR CREATE requests                                  0         .0          0
WSATOTCT Total Web Services Addressing requests                  0         .0          0
PGTOTCCT Total number of CHANNEL CONTAINER requests           2067         .1        117
PGBRWCCT BROWSE CHANNEL CONTAINER requests                     142         .0         20
PGGETCCT GET CHANNEL CONTAINER requests                        927         .1         46
PGPUTCCT PUT CHANNEL CONTAINER requests                        998         .1         52
PGMOVCCT MOVE CHANNEL CONTAINER requests                         0         .0          0
PGGETCDL GET CHANNEL CONTAINER data length                  125781        7.8       9165
PGPUTCDL PUT CHANNEL CONTAINER data length                   87237        5.4       6993
PGCSTHWM Maximum Container Storage allocated to task         11970      153.5      11970
```

Part 4: User field statistics

This final part of the Performance Totals report displays the count and time values described above for the user fields contained in the CMF performance class records. The CICS 12-byte ID is printed to define each field.

```
 V3R2M0                                                  CICS Performance Analyzer
                                                            Performance Totals

TOTL0001 Printed at 12:03:45  3/15/2011    Data from 11:10:52  3/24/2009 to 11:34:12  3/24/2009                        Page      10

                                       ...... C  O  U  N  T  S ......   ........... T  I  M  E ...........
From Selected User Records                Total   Avg/Task   Max/Task       Total    Avg/Task     Max/Task

TEST          TEST    S001                   21         .0          1           8        .011        1.180
TEST          TEST    S002                   21         .0          1           0        .000         .001
RMITOTAL      CPARMI  A001                    0         .0          0
RMIOTHER      CPARMI  A002                    0         .0          0
RMIDB2        CPARMI  A003                    0         .0          0
RMIDBCTL      CPARMI  A004                    0         .0          0
RMIEXDLI      CPARMI  A005                    0         .0          0
RMIMQM        CPARMI  A006                    0         .0          0
RMITCPIP      CPARMI  A007                    0         .0          0
ICTOTAL       IC      A001                    0         .0          0
ASKTIME       IC      A002                    0         .0          0
CANCEL        IC      A003                    0         .0          0
DELAY         IC      A004                    0         .0          0
INTERVAL      IC      A005                    0         .0          0
POST          IC      A006                    0         .0          0
RETRIEVE      IC      A007                    0         .0          0
START         IC      A008                    0         .0          0
```

Figure 34. Performance Totals report (part 4): User field statistics

Wait Analysis report

The Wait Analysis report provides a breakdown of wait activity by Transaction ID (or other ordering fields). You can see at a glance which CICS resources are causing your transactions to be suspended. This report can help you to quickly identify the possible source of a performance response time problem.

Report command

The Wait Analysis report can be requested from a Report Set in the CICS PA dialog. Select the **Wait Analysis** report in the **Performance Reports** category.

In batch, the `WAITANALysis` command is used to request the Wait Analysis report.

The command to produce the default report is:

```
CICSPA WAITANALYSIS
```

To tailor the report, you can specify report options as follows:

```
CICSPA WAITANALYSIS(
        [BY(by1[,by2][,by3]),]
        [INTERVAL(hh:mm:ss),]
        [OUTPUT(ddname),]
        [LINECOUNT(nnn),]
        [TITLE1('...sub-heading left ...'),]
        [TITLE2('...sub-heading right...'),]
        [SELECT(PERFORMANCE(INCLUDE|EXCLUDE(field1(values1),...),...))])
```

You can specify up to three BY operands to determine the sort order of the report. If omitted, the default is **BY(TRAN)**. Only fields of type T (Time) and C (Character) might be specified. The following fields are eligible sort fields:

APPLID
APPLPROG
APPLTRAN
FCTY
ISIPICNM
LUNAME
PROGRAM
RLUNAME
RPTCLASS
SRVCLASS
START
STOP
TCLASSNM
TCPSRVCE
TERM
TERMCNNM
TRAN
USERID
WBATMSNM
WBPIPLNM
WBPROGNM
WBSVCENM
WBSVOPNM
WBURIMNM

The time interval applies when you want to summarize wait activity over time, and is only applicable when one of the BY operands is a time stamp (START or STOP). The default time interval is **00:01:00** (1 minute).

Report content

The Wait Analysis report provides a detailed breakdown of Suspend Wait time. The BY operands control the sort order and enable the data to be aggregated. A Recap report, printed at the conclusion of the detail report, provides an overall breakdown of Suspend Wait Time.

Note: Some suspend times or counts, particularly in the Recap report, might be large. Very large numbers are displayed in exponential format *nnnnnnnEsmm* where:

nnnnnnn is the leftmost 7 digits of the original number
mm is the exponent
s is the sign (+ or -)

Detail report

The Wait Analysis report prints details per control break. Each BY sort field combination causes a control break in the report.

Figure 35 shows part of the Wait Analysis report and Figure 36 on page 66 shows the Wait Analysis Recap report produced by the command:

```
CICSPA WAITANAL(OUTPUT(WAIT0001),
                INTERVAL(00:01:00))
```

```
 V3R2M0                                          CICS Performance Analyzer
                                                   Wait Analysis Report
WAIT0001 Printed at 12:31:46 10/08/2010    Data from 15:30:33  9/29/2010 to 23:59:52  9/29/2010

-------------------------------------------------------------------------------------------------------------------------------
Tran=CEMT
  Summary Data                                                 -------- Time ---------    ------ Count ------    ------ Ratio ------
                                                                     Total     Average       Total    Average
    # Tasks                                                                                     14
    Response Time                                                  86.9096      6.2078
    Dispatch Time                                                   2.2610      0.1615         641       45.8      2.6% of Response
    CPU Time                                                        0.1420      0.0101         641       45.8      6.3% of Dispatch
    Suspend Wait Time                                              84.6485      6.0463         638       45.6     97.4% of Response
    Dispatch Wait Time                                              0.0407      0.0029         627       44.8      0.0% of Suspend
      QR TCB Redispatch Wait Time                                   0.0153      0.0011         592       42.3     37.5% of Dispwait
    Resource Manager Interface (RMI) elapsed time                   0.0000      0.0000           0        0.0      0.0% of Response
    Resource Manager Interface (RMI) suspend time                   0.0000      0.0000           0        0.0      0.0% of Suspend

  Suspend Detail                                               ------------------- Suspend Time ------------------- ----- Count -----
                                                                     Total     Average   %age  Graph                   Total  Average
    TCIOWTT  Terminal wait for input time                          75.7524      5.4109  89.5% |****************          17      1.2
    ICDELAY  Interval Control (IC) wait time                        5.0984      0.3642   6.0% |*                          1      0.1
    N/A      Other Wait Time                                        3.6753      0.2625   4.3% |                          608     43.4
    SZWAIT   FEPI services wait time                                0.1222      0.0087   0.1% |                            1      0.1
    DSPDELAY First dispatch wait time                               0.0002      0.0000   0.0% |                           11      0.8
-------------------------------------------------------------------------------------------------------------------------------
```

Figure 35. Wait Analysis report

The Wait Analysis report has two sections:

1. The first section provides a summary of common performance metrics, including:
   - Number of tasks
   - Response time
   - Dispatch time
   - CPU time
   - Suspend wait time
   - Dispatch wait time
   - QR TCB Redispatch Wait Time
   - RMI elapsed time

- RMI suspend time

2. The second section provides a detailed breakdown of Suspend time by component, such as Dispatch wait, File wait, and so on. Components are reported in descending wait time order, thereby ensuring that the primary cause of task wait is at the top of the list.

   Only wait clocks with non-zero elapsed time are reported.

BY sort fields:

You can select up to three BY sort fields. If one of the BY fields is a Start or a Stop time, the **Interval** specification is also reported. If a field is not present in the SMF input records, a value of **<Missing>** is reported. Missing values are always shown after values that are present.

Summary Data:

The column headings in this part of the Wait Analysis report are:

Time

Total
Total elapsed time.

Average
Average elapsed time (Total divided by #Tasks).

Count

Total
Total number of events.

Average
Average number of events (Total divided by #Tasks).

Ratio
Percentage of time this component contributed to overall Response, Dispatch or Suspend time. Ratios are calculated using the values in the **Total Time** column.

The row information includes:

 # Tasks
The total number of tasks.

Response Time
Task Response time, calculated as Stop time (owner: DFHCICS, field ID: 006) minus Start time (owner: DFHCICS, field ID: 005).

Dispatch Time
The total elapsed time during which the user task was dispatched by the CICS dispatcher domain on each CICS TCB under which the task ran (field: USRDISPT, owner: DFHTASK, field ID: 007).

CPU Time
The total processor (CPU) time during which the user task was dispatched by the CICS dispatcher domain on each CICS TCB under which the task ran (field: USRCPUT, owner: DFHTASK, field ID: 008).

Suspend Wait Time
The total elapsed suspend (wait) time for which the user task was suspended by the CICS dispatcher domain (field: SUSPTIME, owner: DFHTASK, field ID: 014).

Dispatch Wait Time
The elapsed time for which the user task waited for redispatch by the CICS dispatcher domain (field: DISPWTT, owner: DFHTASK, field ID: 102). This is the aggregate of the wait times between each wait event completion and the user task being redispatched by the CICS dispatcher domain.

QR TCB Redispatch Wait Time
The elapsed time that the user task waited for redispatch on the CICS QR mode TCB. This is an aggregate of the wait times between each wait event completion and the user task being redispatched by the CICS dispatcher domain on the QR mode TCB (field: QRMODDLY, owner: DFHTASK, field ID 249).

Resource Manager Interface (RMI) elapsed time
The total elapsed time the user task spent in the CICS Resource Manager Interface (RMI) for all the resource managers invoked by the user task, including DB2, IMS (DBCTL), WebSphere MQ, CICS Sockets, and so on (field: RMITIME, owner: DFHTASK, field ID: 170).

Resource Manager Interface (RMI) suspend time
The elapsed time during which the user task was suspended by the CICS dispatcher domain whilst in the CICS Resource Manager Interface (RMI) (field: RMISUSP, owner: DFHTASK, field ID: 171).

Suspend Detail:

This section details the components of the **Suspend Wait Time** reported in the Summary Data section.

The column headings in this part of the Wait Analysis report are:

Suspend Time

Total
Total component Suspend Time.

Average
Average component Suspend Wait Time, calculated as Total component Suspend Time divided by #Tasks (from Summary Data).

%age
Percentage of time this component contributed to the Suspend Time, calculated as Total component Suspend Time divided by Suspend Wait Time (from Summary Data) multiplied by 100.

Graph
A histogram representation of the **%age** value with one asterisk per 5%. 100% is 20 asterisks, 5% is one asterisk. Any value less than 5% does not appear in the graph.

Count

Total
Total component suspend count.

Average
Average component suspend count, calculated as Total Count divided by #Tasks (from Summary Data).

The Suspend Detail includes one report line for every Suspend component clock with a non-zero value. The components are reported in descending wait time order, ensuring that the primary cause of task wait is at the top of the list.

Note that occasionally there are Suspend Events that are wholly contained within another Suspend Event. These events are shown with their Suspend Description prefixed with >. For example, DSPDELAY contains TCLDELAY and MXTDELAY. Dependent Suspend event metrics are not included in Totals as their Parent event is assumed to contain all of the dependent events' resource usage.

N/A
Occasionally, the total task suspend time is greater than the sum of the component suspend times. This unaccounted time is reported with a Field Name of **N/A** and a description of **Other Wait Time.** This unaccounted time is calculated as the difference between Suspend Wait Time (from the Summary Data section) minus the sum of the component values (from the Suspend Detail section). The **Other Wait Time** count value is calculated similarly.

CFDTWAIT CF Data Table access requests wait time
The elapsed time in which the user task waited for a data table access request to the coupling facility data table server to complete (owner: DFHFILE, field ID: 176).

DB2CONWT DB2 Connection wait time
The value of this field depends on the version of DB2 to which CICS is connected:

- When CICS is connected to DB2 Version 5 or earlier, and is therefore not exploiting the CICS open transaction environment, (OTE) this field is the elapsed time in which the user task waited for a CICS subtask (TCB) to become available.
- When CICS is connected to DB2 Version 6 or later, and so is using the CICS open transaction environment (OTE), this field is the elapsed time in which the user task waited for a DB2 connection to become available for use with the user tasks open TCB.

(owner: DFHDATA, field ID: 188)

DB2RDYQW DB2 Thread wait time
The elapsed time in which the user task waited for a DB2 thread to become available (owner: DFHDATA, field ID: 187).

DB2WAIT DB2 SQL/IFI wait time
In CICS Transaction Server for z/OS Version 2.1 or earlier, this field is the elapsed time in which the user task waited for DB2 to service the DB2 EXEC SQL and Instrumentation Facility Interface (IFI) requests issued by the user task.

In CICS Transaction Server for z/OS Version 2.2 or later:

- When CICS is connected to DB2 Version 5 or earlier, and is therefore not exploiting the CICS open transaction environment (OTE), this field is the elapsed time in which the user task waited for DB2 to service the DB2 EXEC SQL and Instrumentation Facility Interface (IFI) requests issued by the user task.

- When CICS is connected to DB2 Version 6 or later, and so is using the CICS open transaction environment (OTE), this field does not apply and is zero. This is because the CICS-DB2 attachment facility uses open TCBs as the thread TCBs rather than using specially created subtask TCBs and as a result any waits in DB2 that occur on a CICS L8 mode TCB will not be visible to the CICS dispatcher domain.

(owner: DFHDATA, field ID: 189).

DSCHMDLY Redispatch wait time caused by change-TCB mode
The elapsed time in which the user task waited for redispatch after a CICS Dispatcher change-TCB mode request was issued by or on behalf of the user task. For example, a change-TCB mode request from a CICS L8 or S8 mode TCB back to the CICS QR mode TCB might have to wait for the QR TCB because another task is currently dispatched on the QR TCB (owner: DFHTASK, field ID: 247).

DSMMSCWT CICS Dispatcher MVS Storage Constraint wait time
The elapsed time which the user task spent waiting because no TCB was available, and none could be created because of MVS storage constraints (owner: DFHTASK, field ID: 279).

DSPDELAY First Dispatch wait time
The elapsed time in which the user task waited for the first dispatch by the CICS dispatcher domain (owner: DFHTASK, field ID: 125).

DSTCBMWT CICS Dispatcher TCB Mismatch wait time
The elapsed time which the user task spent in TCB Mismatch waits, that is, waiting because there was no TCB available matching the request, but there was at least one non-matching free TCB (owner: DFHTASK, field ID: 279). For transactions that invoke a Java program to run in a JVM, this shows the time spent waiting for a TCB of the correct mode (J8 or J9) and JVM profile.

ENQDELAY Local Enqueue wait time
The elapsed time in which the user task waited for a CICS task control local enqueue (owner: DFHTASK, field ID: 129).

FCIOWTT File I/O wait time
The elapsed time in which the user task waited for non-RLS file I/O (owner: DFHFILE, field ID: 063).

GNQDELAY Global Enqueue wait time
The elapsed time in which the user task waited for a CICS task control global enqueue (owner: DFHTASK, field ID: 123).

GVUPWAIT Give up control wait time
The elapsed time in which the user task waited as a result of giving up control to another task (owner: DFHTASK, field ID: 184).

ICDELAY Interval Control (IC) wait time
The elapsed time that the user task waited as a result of issuing either:
- An interval control EXEC CICS DELAY command for a specified time interval, or
- An interval control EXEC CICS DELAY command for a specified time of day to expire, or
- An interval control EXEC CICS RETRIEVE command with the WAIT option specified.

(owner: DFHTASK, field ID: 183).

IMSWAIT IMS (DBCTL) wait time
The total elapsed time in which the user task waited for IMS (DBCTL) to service the IMS requests issued by the user task (owner: DFHDATA, field ID: 186).

IRIOWTT MRO link wait time
The elapsed time in which the user task waited for control to return at this end of an MRO (Inter-Region Communication) connection (owner: DFHTERM, field ID: 100).

ISIOWTT IPCONN link wait time
The elapsed time for which a user task waited for control at this end of an IPIC connection (owner: DFHSOCK, field ID: 300).

JCIOWTT Journal I/O wait time
The elapsed time in which the user task waited for journal (logstream) I/O (owner: DFHJOUR, field ID: 010).

JVMTHDWT JVM server thread wait time
The elapsed time that the user task waited to obtain a JVM server thread because the CICS system had reached the thread limit for a JVM server in the CICS region (owner: DFHTASK, field ID: 401).

LMDELAY Lock Manager (LM) wait time
The elapsed time in which the user task waited to acquire a lock on a resource. A user task cannot explicitly acquire a lock on a resource, but many CICS modules lock resources on behalf of user tasks using the CICS lock manager (LM) domain (owner: DFHTASK, field ID: 128).

LU61WTT LU6.1 wait time
The elapsed time in which the user task waited for I/O on a LUTYPE6.1 connection or session. This time includes the waits for conversations across LUTYPE6.1 connections, but not the waits incurred due to LUTYPE6.1 syncpoint flows. (owner: DFHTERM, field ID: 133).

LU62WTT LU6.2 wait time
The elapsed time in which the user task waited for I/O on a LUTYPE6.2 connection or session. This time includes the waits for conversations across LUTYPE6.2 (APPC) connections, but not the waits incurred due to LUTYPE6.2 (APPC) syncpoint flows (owner: DFHTERM, field ID: 134).

MAXHTDLY Max Hot-Pooling TCB Delay time
The elapsed time in which the user task waited to obtain a CICS Hot-Pooling TCB (H8 mode), because the CICS system had reached the limit set by the system parameter, MAXHPTCBS (owner: DFHTASK, field ID: 278). The H8 mode open TCBs are used exclusively by HPJ-compiled Java programs defined with HOTPOOL(YES). This field is not available from CICS Transaction Server V3.1.

MAXJTDLY Max JVM TCB Delay time
The elapsed time during which the user task waited to obtain a CICS JVM TCB (J8 mode), because the CICS system had reached the limit set by the system parameter, MAXJVMTCBS (owner: DFHTASK, field ID: 277). The J8 mode open TCBs are used exclusively by Java programs defined with JVM(YES).

MAXOTDLY MAXOPENTCBS wait time
The elapsed time in which the user task waited to obtain a CICS open mode TCB because the CICS system had reached the limit set by the system parameter, MAXOPENTCBS (owner: DFHTASK, field ID: 250).

MAXSTDLY Maximum SSL TCB delay time
The elapsed time in which the user task waited to obtain a CICS SSL TCB (S8 mode), because the CICS system had reached the limit set by the system initialization parameter MAXSSLTCBS. The S8 mode open TCBs are used exclusively by secure sockets layer (SSL) pthread requests issued by or on behalf of a user task (owner: DFHTASK, field ID: 281).

MAXTTDLY Maximum JVM server thread TCB delay time
The elapsed time in which the user task waited to obtain a T8 TCB, because the CICS system reached the limit of available threads. The T8 mode open TCBs are used by a JVM server to perform multithreaded processing. Each T8 TCB runs under one thread. The thread limit is 1024 for each CICS region and each JVM server in a CICS region can have up to 256 threads.

MAXXTDLY Maximum XPLink TCB delay time
The elapsed time in which the user task waited to obtain a CICS XP TCB (X8 or X9 mode), because the CICS system had reached the limit set by the system parameter, MAXXPTCBS. The X8 and X9 mode open TCBs are used exclusively by C and C++ programs that were compiled with the XPLINK option (owner: DFHTASK, field ID: 282).

MXTDELAY First Dispatch MXT wait time
The elapsed time in which the user task waited for first dispatch which was delayed because of the limits set by the MXT system parameter being reached (owner: DFHTASK, field ID: 127).

PTPWAIT 3270 Bridge Partner wait time
The elapsed time in which the user task waited for the 3270 bridge partner transaction to complete (owner: DFHTASK, field ID: 285).

RLSWAIT RLS File I/O wait time
The elapsed time in which the user task waited for RLS file I/O (owner: DFHFILE, field ID: 174).

RQPWAIT Request Processor wait time
The elapsed time during which the request processor user task CIRP waited for any outstanding replies to be satisfied (owner: DFHTASK, field ID: 193).

RQRWAIT Request Receiver wait time
The elapsed time during which the request receiver user task CIRR (or user specified transaction ID) waited for any outstanding replies to be satisfied (owner: DFHTASK, field ID: 192).

RRMSWAIT Resource Recovery Services Indoubt wait time
The elapsed time in which the user task waited indoubt using the MVS resource recovery services (RRS) for transactional EXCI (owner: DFHTASK, field ID: 191).

RUNTRWTT BTS run Process/Activity wait time
The elapsed time in which the user task waited for completion of a transaction that ran as a result of the user task issuing a CICS BTS run ACQPROCESS or run activity request to run a process or activity synchronously (owner: DFHTASK, field ID: 195).

SOIOWTT Inbound Socket I/O wait time
The elapsed time in which the user task waited for inbound socket I/O (owner: DFHSOCK, field ID: 241).

SOOIOWTT Outbound Socket I/O wait time
The elapsed time in which the user task waited for outbound socket I/O (owner: DFHSOCK, field ID: 299).

SRVSYWTT CF Data Table syncpoint wait time
The elapsed time in which the user task waited for completion of syncpoint or resynchronization processing using the coupling facility data table server to complete (owner: DFHSYNC, field ID: 177).

SYNCDLY SYNCPOINT parent request wait time
The elapsed time in which the user task waited for a syncpoint request to be issued by it's parent transaction (owner: DFHSYNC, field ID: 196). The user task was executing as a result of the parent transaction issuing a CICS Business Transaction Services (BTS) Run ACQPROCESS or Run Activity requests to run a process or activity synchronously.

SZWAIT FEPI services wait time
The elapsed time in which the user task waited for FEPI services (owner: DFHFEPI, field ID: 156).

TCIOWTT Terminal wait for input time
The elapsed time in which the user task waited for input from the terminal user, after issuing an EXEC CICS RECEIVE request (owner: DFHTERM, field ID: 009).

TCLDELAY First Dispatch TCLSNAME wait time
The elapsed time in which the user task waited for first dispatch which was delayed because of the limits set for this transaction's transaction class (owner: DFHTASK, field ID: 126).

TDIOWTT VSAM transient data I/O wait time
The elapsed time in which the user task waited for VSAM I/O to the intrapartition transient data set, DFHINTRA (owner: DFHDEST, field ID: 101).

TSIOWTT VSAM TS I/O wait time
The elapsed time in which the user task waited for VSAM I/O to the auxiliary temporary storage data set, DFHTEMP (owner: DFHTEMP, field ID: 011).

TSSHWAIT Asynchronous Shared TS wait time
The elapsed time in which the user task waited for an asynchronous shared temporary storage request to a temporary storage data server to complete (owner: DFHTEMP, field ID: 178).

WMQGETWT WebSphere MQ GETWAIT wait time
The elapsed time the user task waited for WebSphere MQ to service the user task's GETWAIT request (owner: DFHDATA, field ID: 396).

WTCEWAIT CICS ECB wait time
The elapsed time the user task waited for:
- One or more ECBs, passed to CICS by the user task using the EXEC CICS WAITCICS ECBLIST command, to be MVS POSTed.
- Completion of an event initiated by the same or by another task.

(owner: DFHTASK, field ID: 182).

WTEXWAIT External ECB wait time
The elapsed time the user task waited for one or more ECBs, passed to CICS by the user task using the EXEC CICS WAIT EXTERNAL ECBLIST() command, to be MVS POSTed. (owner: DFHTASK, field ID: 181).

Recap report

The Wait Analysis report is always followed by the Wait Analysis Recap report to provide a breakdown of the CMF input data. The BY fields are ignored.

The Recap report performs two functions:

1. It provides an overview of system-wide wait time. All CMF suspend components are reported in descending wait time order ensuring that the primary cause of system-wide task wait is at the top of the list.
2. It shows **Field Availability** information:

   Present
   The number of times the field was present in the CMF performance records

   Missing
   The number of times the field was *not* present in the CMF performance records

The Recap report shows all wait clocks, even clocks that accumulated no wait time. This allows you to see at a glance:
- All the individual Suspend component clocks.
- Which clocks might be missing.

For a description of the fields in the Recap report, see "Detail report" on page 57.

In addition, the Recap report might display an Average value of **N/C** which indicates that it is not calculable. This occurs if there was no wait activity for this component.

Figure 35 on page 57 shows part of the Wait Analysis report and Figure 36 on page 66 shows the Wait Analysis Recap report produced by the command:

```
CICSPA WAITANAL(OUTPUT(WAIT0001),
                INTERVAL(03:00:00),
                BY(TRAN,APPLID))
```

```
 V3R2M0                                          CICS Performance Analyzer
                                                 Wait Analysis Recap Report
WAIT0001 Printed at 12:31:46 10/08/2010    Data from 15:30:33  9/29/2010 to 23:59:52  9/29/2010

                                                 --------- Time --------                              ------ Ratio ------
                                                       Total     Average

# Tasks                                                   84
Response Time                                       2497.8095     29.7358
Dispatch Time                                         23.1929      0.2761                                0.9% of Response
CPU Time                                               3.5547      0.0423                               15.3% of Dispatch
Suspend Wait Time                                   2474.6159     29.4597                               99.1% of Response
Dispatch Wait Time                                     2.2872      0.0272                                0.1% of Suspend
  QR TCB Redispatch Wait Time                          1.0313      0.0123                               45.1% of Dispwait
Resource Manager Interface (RMI) elapsed time          0.0000      0.0000                                0.0% of Response
Resource Manager Interface (RMI) suspend time          0.0000      0.0000                                0.0% of Suspend

                                                 ------------------- Suspend Time -------------------   Field Availability
                                                       Total     Average   %age  Graph                  Present    Missing
N/A      Other Wait Time                           2361.2136     28.1097  95.4% |******************
TCIOWTT  Terminal wait for input time               104.5363      1.2445   4.2% |                            84          0
ICDELAY  Interval Control (IC) wait time               5.0984      0.0607   0.2% |                            84          0
FCIOWTT  File I/O wait time                            2.3381      0.0278   0.1% |                            84          0
LMDELAY  Lock Manager (LM) wait time                   1.1213      0.0133   0.0% |                            84          0
SZWAIT   FEPI services wait time                       0.1375      0.0016   0.0% |                            84          0
DSPDELAY First dispatch wait time                      0.1085      0.0013   0.0% |                            84          0
MXTDELAY > First dispatch MXT wait time                0.0000         N/C   0.0% |                            84          0
TCLDELAY > First dispatch TCLSNAME wait time           0.0000         N/C   0.0% |                            84          0
RLSWAIT  RLS File I/O wait time                        0.0591      0.0007   0.0% |                            84          0
JCIOWTT  Journal I/O wait time                         0.0019      0.0000   0.0% |                            84          0
SOIOWTT  Inbound Socket I/O wait time                  0.0011      0.0000   0.0% |                            84          0
GVUPWAIT Give up control wait time                     0.0002      0.0000   0.0% |                            84          0
RQPWAIT  Request Processor Wait Time                   0.0000         N/C   0.0% |                            84          0
RQRWAIT  Request Receiver Wait Time                    0.0000         N/C   0.0% |                            84          0
SOOIOWTT Outbound Socket I/O Wait Time                 0.0000         N/C   0.0% |                            84          0
LU62WTT  LU6.2 wait time                               0.0000         N/C   0.0% |                            84          0
LU61WTT  LU6.1 wait time                               0.0000         N/C   0.0% |                            84          0
IRIOWTT  MRO link wait time                            0.0000         N/C   0.0% |                            84          0
TSSHWAIT Asynchronous Shared TS wait time              0.0000         N/C   0.0% |                            84          0
TSIOWTT  VSAM TS I/O wait time                         0.0000         N/C   0.0% |                            84          0
MAXOTDLY Maximum Open TCB delay time                   0.0000         N/C   0.0% |                            84          0
RUNTRWTT BTS run Process/Activity wait time            0.0000         N/C   0.0% |                            84          0
RRMSWAIT Resource Recovery Services indoubt wait time  0.0000         N/C   0.0% |                            84          0
WTCEWAIT CICS ECB wait time                            0.0000         N/C   0.0% |                            84          0
WTEXWAIT External ECB wait time                        0.0000         N/C   0.0% |                            84          0
ENQDELAY Local Enqueue wait time                       0.0000         N/C   0.0% |                            84          0
GNQDELAY Global Enqueue wait time                      0.0000         N/C   0.0% |                            84          0
SYNCDLY  SYNCPOINT parent request wait time            0.0000         N/C   0.0% |                            84          0
SRVSYWTT CF Data Table syncpoint wait time             0.0000         N/C   0.0% |                            84          0
CFDTWAIT CF Data Table access requests wait time       0.0000         N/C   0.0% |                            84          0
TDIOWTT  VSAM transient data I/O wait time             0.0000         N/C   0.0% |                            84          0
DB2WAIT  DB2 SQL/IFI wait time                         0.0000         N/C   0.0% |                            84          0
DB2CONWT DB2 Connection wait time                      0.0000         N/C   0.0% |                            84          0
DB2RDYQW DB2 Thread wait time                          0.0000         N/C   0.0% |                            84          0
IMSWAIT  IMS (DBCTL) wait time                         0.0000         N/C   0.0% |                            84          0

*Total*   (All Suspend Wait events)                 2474.6159     29.4597 100.0% |********************
```

Figure 36. Wait Analysis Recap report

Transaction Profiling report

The Transaction Profiling report is a comparison of two sets of CMF performance class data. For example, the performance data for a particular CICS application in two different time periods, or the performance data for all CICS applications on two systems. The two sets of data to be compared are known as the *report* data and the *baseline* data.

The source of the report data or the baseline data can be either SMF files or performance historical databases (HDBs).

Report command

You can request the Transaction Profiling report in the dialog either:

- From a Report Set. Select the **Transaction Profiling** report in the **Performance Reports** category.
- Independently of Report Set. Select **Profiling** on the Primary Option Menu.

To request the Transaction Profiling report in batch, you use the `PROFILING` operand.

The command to produce the default report is:

```
CICSPA PROFILING(REPORT(SMF|hdbname)),
       PROFILING(BASELINE(SMF|hdbname))
```

You must specify two PROFILING operands for each Transaction Profiling report:

- One with a REPORT suboperand that defines the source of the report data
- One with a BASELINE suboperand that defines the source of the baseline data

For example, REPORT(SMF) defines the source of the report data as the SMF files identified by either the most recent INPUT operand, if specified, or the DDname SMFIN, if no INPUT operand is specified. BASELINE(hdbname) defines the source of the baseline data as the List or Summary Performance historical database named hdbname that is defined in the HDB Register identified by the DDname CPAHDBRG.

To tailor the report, you can specify report options as follows:

```
CICSPA PROFILING([ID(profile#)],REPORT(SMF|hdbname),
         [SMFSTART(date,time),]
         [SMFSTOP(date,time),]
         [SELECT(PERFORMANCE(INCLUDE|EXCLUDE(field1(values1),...),...)),]
         [SELECT2(PERFORMANCE(INCLUDE|EXCLUDE(field1(values1),...),...)),]
         [FIELDS(field1[(options)],...),]
         [INTERVAL(hh:mm:ss),]
         [PRINT(REPORT,BASELINE,DELTA,CHANGE,
                FULL|EXCEPTIONSONLY,NOBLANKLINES|BLANKLINES),]
         [THRESHOLD(%abovebaseline,%belowbaseline),]
         [OUTPUT(ddname),]
         [EXTERNAL(ddname),]
         [NOTOTALS|TOTALS(n),]
         [LINECount(nnn),]
         [TITLE1('...1st 64 characters of title... '),]
         [TITLE2('...2nd 64 characters of title... '),])

       PROFILING([ID(profile#)],BASELINE(SMF|hdbname),
         [SMFSTART(date,time),]
         [SMFSTOP(date,time),]
```

```
[SELECT(PERFORMANCE(INCLUDE|EXCLUDE(field1(values1),...),...)),]
[SELECT2(PERFORMANCE(INCLUDE|EXCLUDE(field1(values1),...),...)),]
[FIELDS(field1[(options)],...),]
[INTERVAL(hh:mm:ss)])
```

To understand how the Transaction Profiling report compares two sets of data, it is useful to think of the Transaction Profiling report as a comparison of two Performance Summary reports:

- One for the report data, as specified by the PROFILING(REPORT(...)...) operand
- One for the baseline data, as specified by the PROFILING(BASELINE(...)...) operand

Each Performance Summary report uses a SUMMARY Report Form (FIELDS operand) to:

1. Group and sort input records by key field values
2. Summarize the values of non-key fields in each group of records (for example, as an average or a total)

The Transaction Profiling report consolidates the two sets of summarized data by finding a row of summarized baseline data whose key fields match a row of summarized report data. The Transaction Profiling report then compares the values of the non-key fields in the two matched rows. Rows of summarized baseline data whose key field values do not match any rows of summarized report data are discarded.

When designing a Transaction Profiling report, you might find it useful to first run the two Performance Summary reports. This enables you to review the two sets of summarized data separately, before using the Transaction Profiling report to consolidate and compare them. Note that the Report Form and the Baseline Form both affect how the Transaction Profiling report summarizes baseline data. The Transaction Profiling report summarizes baseline data according to the order of the fields in the Report Form, and using only those fields that occur in both the Baseline Form and the Report Form.

Report content

The content of a Transaction Profiling report is similar to a Performance Summary report, with additional row headings specific to the Transaction Profiling report (Report, Baseline, Delta, and Change%) appearing between the column for the last key field and the first non-key field:

```
 V3R2M0                                          CICS Performance Analyzer
                                                   Transaction Profiling
                                   ____________________________________________
PROF0001 Printed at 12:03:45  3/15/2011     Report   Data from 17:24:50  5/02/2006 to 17:27:15  5/02/2006
                                            Baseline Data from 16:21:47  5/02/2006 to 16:23:42  5/02/2006


                                Avg      Avg      Avg      Avg      Avg      Avg      Avg      Avg      Avg      Avg
Tran                #Tasks Response Dispatch User CPU  Suspend DispWait  FC Wait   FCAMRq  IR Wait SC24UHWM SC31UHWM
                                Time     Time     Time     Time     Time     Time    Count     Time    Count    Count
DB2D     Report        560    .0504    .0057    .0017    .0446    .0028    .0000        0    .0000     1040     1296
DB2D     Baseline      448    .0369    .0047    .0018    .0322    .0015    .0000        0    .0000     1040     1296
         Delta        +112   +.0134   +.0010   -.0000   +.0125   +.0012   +.0000       +0   +.0000       +0       +0
         Change%    +25.00   +36.43   +20.59    -2.41   +38.77   +79.51     +.00     +.00     +.00     +.00     +.00

DCO1     Report        560    .0598    .0011    .0005    .0587    .0059    .0000        0    .0000      976     1296

GLCT     Report        560    .0543    .0005    .0004    .0538    .0023    .0000        0    .0000        0        0
GLCT     Baseline      448    .0432    .0005    .0003    .0427    .0012    .0000        0    .0000        0        0
         Delta        +112   +.0111   +.0000   +.0000   +.0111   +.0011   +.0000       +0   +.0000       +0       +0
         Change%    +25.00   +25.82    +7.37   +10.61   +26.03   +92.24     +.00     +.00     +.00     +.00     +.00
```

Figure 37. Transaction Profiling report (comparing data using the default form)

Cross-System Work report

The Cross-System Work report accepts performance class data from a single or multiple CICS systems and correlates the data by network unit-of-work.

The report default is to print only the CMF performance class records that are contained in a unique network unit-of-work that includes multiple performance records.

Note: The Cross-System Work report will also include multiple performance class records from a single system.

You can request a report from all available records, or you can specify selection criteria to request a report from only the records that meet specific requirements. The SELECT and SELUOW commands provide selection at the UOW (multi-task) level as well as the Task level.

Report command

The Cross-System Work report can be requested from a Report Set in the CICS PA dialog. Select the **Cross-System Work** report in the **Performance Reports** category.

In batch, the `CROSSsystem` command is used to request the Cross-System Work report. To tailor the report, the `LISTX` command is used and produces the Cross-System Work Extended report.

Cross-System Work

The command to produce the default report is:

```
CICSPA CROSSSYSTEM
```

To tailor the report, you can specify report options as follows:

```
CICSPA CROSSSYSTEM(
              [OUTPUT(ddname),]
              [EXTERNAL(ddname),]
              [PRINTMULTIPLE,]
              [NOPRINTMULTIPLE,]
              [PRINTSINGLE,]
              [NOWRITE,]
              [LINECOUNT(nnn),]
              [TITLE1('...sub-heading left ...'),]
              [TITLE2('...sub-heading right...'),]
              TASKORDER(START|STOP)
              [SELECT(PERFORMANCE(INCLUDE|EXCLUDE(field1(values1),...),...)),]
              [SELUOW(PERFORMANCE(INCLUDE|EXCLUDE(field1(values1),...),...))])
```

Cross-System Work Extended

To tailor the format of the report, see “Cross-System Work Extended” on page 29.

Report content

You can specify a LIST or LISTX Report Form to tailor the format and content of the Cross-System Work report. Specifying a Report Form produces the Cross-System Work Extended report. Otherwise, the default format of the Cross-System Work report is produced.

Default format: Cross-System Work

On the Cross-System Work report, each line is printed from a single CMF performance class record. Records that are part of the same network unit-of-work

are printed sequentially in groups separated by lines containing four dashes (----). The printed information allows you to find the corresponding records in the Performance List report.

The Cross-System Work report is produced using an external SORT facility. An External Work Data Set is required to store the records before they are sorted. This data set is either specified explicitly using **EXTERNAL(ddname),** or CICS PA assigns one from the External Work File pool.

The records are sorted in the following order:
1. Network Unit-of-Work NETNAME
2. Network Unit-of-Work ID
3. Syncpoint count concatenated with either:
   - Task stop time in descending (reverse) order

     or
   - Task start time in ascending order
4. APPLID

In the third sort field, the syncpoint count is used to resolve unsynchronized STORE CLOCK (STCK) values between systems. The syncpoint count and stop time (or start time) show the sequence of tasks within the network unit-of-work. In some cases (for example, where user event monitor points (EMPs) are used), the syncpoint count does not reflect the sequence of events within a network unit-of-work. For these instances, all the task records are printed, but not necessarily in the order they happened. You can tell that this situation exists if the stop times are not in descending order (or the start times are not in ascending order).

For more information on correlating the performance class data by network unit-of-work ID, see “Correlating performance class data” on page 325.

The Cross-System Work report shown in Figure 38 on page 71 was created using the command:

```
CICSPA CROSS(PRINTS,PRINTM,NOWRITE,OUTPUT(CROS0001))
```

```
 V3R2M0                                                CICS Performance Analyzer
                                                          Cross-System Work

CROS0001 Printed at 12:03:45  3/15/2011 Data from 11:10:29  2/04/2010 to 11:33:51  2/04/2010                          Page       8

                                      Request           Fcty  Conn                   UOW                 R              Response A
Tran Userid   SC TranType Term  LUName   Type   Program  T/Name Name NETName           Seq APPLID     Task T   Stop Time    Time   B

STOC BRENNER  U  U      R               AP:     DFH0STOC             GBIBMIYA.IGCS23C   1  IYK2Z1V3    242 T 11:19:41.001    .7984
RED1 BRENNER  U  U      R               AP:     DFH0RED1             GBIBMIYA.IGCS23C   1  IYK2Z1V3    241 T 11:19:40.337    .1479
SAL1 BRENNER  TP U        S23C IGCS23C  AP:     DFH0SAL1 T/S23C      GBIBMIYA.IGCS23C   1  IYK2Z1V3    239 T 11:19:40.334    .1835
----
SAL1 BRENNER  TP U        S23C IGCS23C  AP:     DFH0SAL1 T/S23C      GBIBMIYA.IGCS23C   1  IYK2Z1V3    251 T 11:19:42.763    .0022
----
SAL1 BRENNER  TP U        S23C IGCS23C  AP:     DFH0SAL1 T/S23C      GBIBMIYA.IGCS23C   1  IYK2Z1V3    255 T 11:19:45.463    .0018
----
CBAM BRENNER  TO U        S23C IGCS23C  AP:     DFHECBAM T/S23C      GBIBMIYA.IGCS23C   1  IYK2Z1V3    259 T 11:19:55.368   7.0077
----
PAYM BRENNER  TO U        S23C IGCS23C  AP:     DFH0PAY0 T/S23C      GBIBMIYA.IGCS23C   1  IYK2Z1V3    289 T 11:20:00.569    .0026
----
PAY1 BRENNER  TP U        S23C IGCS23C  AP:     DFH0PAY1 T/S23C      GBIBMIYA.IGCS23C   1  IYK2Z1V3    294 T 11:20:04.202    .1390
SALE BRENNER  U  U      R               AP:     DFH0SAL2             GBIBMIYA.IGCS23C   1  IYK2Z1V3    295 T 11:20:04.200    .1353
----
3333 BRENNER  TO U        S23C IGCS23C  AP:     ######## T/S23C      GBIBMIYA.IGCS23C   1  IYK2Z1V3    300 T 11:20:08.003    .0028
----
PAYM BRENNER  TO U        S23C IGCS23C  AP:     DFH0PAY0 T/S23C      GBIBMIYA.IGCS23C   1  IYK2Z1V3    303 T 11:20:15.964    .0022
----
PAY1 BRENNER  TP U        S23C IGCS23C  AP:     DFH0PAY1 T/S23C      GBIBMIYA.IGCS23C   1  IYK2Z1V3    305 T 11:20:19.635    .0747
SALE BRENNER  U  U      R               AP:     DFH0SAL2             GBIBMIYA.IGCS23C   1  IYK2Z1V3    306 T 11:20:19.634    .0715
----
CSAC BRENNER  TO U        S23C IGCS23C  AP:     DFHACP   T/S23C      GBIBMIYA.IGCS23C   1  IYK2Z1V3    313 T 11:20:44.089    .0017
----
CBAM BRENNER  TO U        S23C IGCS23C  AP:     DFHECBAM T/S23C      GBIBMIYA.IGCS23C   1  IYK2Z1V3    315 T 11:20:50.772   3.7993
----
RMNU BRENNER  TO U        S23C IGCS23C  TR:CJB1          T/S23C      GBIBMIYA.IGCS23C   1  IYK2Z1V3    323 T 11:20:54.392    .0317
AMNU CBAKER   TO U        R11  IYK2Z1V3 AP:     DFHSAMNU S/S23C CJB3 GBIBMIYA.IGCS23C   1  IYK2Z1V1    158 T 11:20:54.390    .0228
```

Figure 38. Cross-System Work report

The following fields are shown on the Cross-System Work report. For more information on these fields, see “CMF performance class data fields” on page 263.

Tran
The Transaction ID (field: TRAN, owner: DFHTASK, field ID: 001) identifies the name of the transaction that this performance class record represents. Applications that are using Distributed Program Link (DPL) requests should use the TRANSID('xxxx') parameter on the EXEC CICS LINK PROGRAM('xxxxxxxx') command to enable better transaction/application analysis from the monitoring performance class data. If the TRANSID('xxxx') parameter is not specified all the performance class records on the target system for a Distributed Program Link (DPL) mirror transaction will have the same transaction ID. For example, 'CSMI' for a Distributed Program Link (DPL) request from another connected CICS system.

Userid
The User identifier of the transaction (owner: DFHCICS, field ID: 089).

SC Type of transaction start or start code (owner: DFHTASK, field ID: 004).

TranType
This column describes the transaction type:

```
 S          System transaction
 U          User transaction
  M         Mirror transaction
   D        DPL Mirror transaction
    O       ONC RPC Alias transaction
     W      WEB Alias transaction
      B     Bridge transaction
       -    Reserved
        R   CICS BTS Run (ACQPROCESS or activity) transaction synchronous
```

The transaction type is represented as an byte 1 of the transaction flags field (owner: DFHTASK, field ID: 164).

Term

The Terminal ID (field: TERM, owner: DFHTERM, field ID: 002) is either the terminal ID or the session ID. This field is blank if the transaction was not associated with a terminal or session facility.

LUName

The LUname (field: LUNAME, owner: DFHTERM, field ID: 111) is either the VTAM® netname of the terminal ID (if the Access Method for the terminal is VTAM) or the VTAM APPLID of the connection for the session ID. For an EXCI connection, this field is blank. The transaction's terminal or session type can be identified from the NATURE field (byte 0) within the terminal information field (field: TERMINFO, owner: DFHTERM, field ID: 165). This field is blank if the transaction was not associated with a terminal or session facility.

Request Type

This field describes the type of request that the performance record represents:

	Description
AP:	An application program request. The **Program** field will identify the initial application program name invoked for the transaction. **Note:** Function shipped Distributed Program Link (DPL) requests are interpreted as application requests. In this case the **AP:** is followed by the '----' (as for other function shipping requests) to indicate the types of requests issued by the application program.
FS:----	A function shipping request. The '----' indicate the types of function shipping request: **F** File Control **I** Interval Control **D** Transient Data **S** Temporary Storage
TR:xxxx	A transaction routing request from a terminal-owning region. The 'xxxx' is the transaction routing sysid from the RSYSID field (owner: DFHCICS, field ID: 130) and identifies the connection name (sysid) of the remote system to which the transaction was routed.

Program

The Initial Program Name (field: PGMNAME, owner: DFHPROG, field ID: 071) identifies the initial application program invoked for the transaction. Depending on the type of transaction, this field contains either the application program name as defined in the transaction definition, the program name returned by a user written dynamic routing program, the application program name passed on a function shipped Dynamic Program Link (DPL) request, the initial application program name of an ONC RPC Alias Transaction, or the initial application program name of a WEB Alias Transaction. A program name of ######## indicates that the transaction was invoked using the definition of the transaction ID specified by the DTRTRAN system initialization parameter.

FCTY T

This field is an interpretation of byte 0 of the transaction flags field (owner: DFHTASK, field ID: 164) and describes the transaction's facility type:

Type	Description
blank	None
T	Terminal or Session

S Surrogate
D Transient Data queue
B Bridge Terminal

FCTY Name
The transaction's facility name (owner: DFHTASK, field ID: 163).

Conn Name
The terminal session connection name (owner: DFHTERM, field ID: 169). If the terminal facility associated with this transaction is a session, then this field is the name of the owning connection (sysid).

NETName
This column is the network unit-of-work ID (field: NETUOWPX, owner: DFHTASK, field ID: 097) from the system where the network unit-of-work ID originated. This name is constant within each network unit-of-work ID.

For more information on the NETUOWPX field, "DFHTASK fields" on page 287.

UOW Seq
The syncpoint sequence number from the network unit-of-work ID (field: NETUOWSX, owner: DFHTASK, field ID: 098) that was assigned at transaction attach time.

For more information on the NETUOWSX field, see "DFHTASK fields" on page 287.

APPLID
The APPLID of the CICS system upon which the CMF performance record was created. This field indicates the CICS system that performed the work recorded in the record.

Task
The transaction identification number (owner: DFHTASK, field ID: 031). This is printed for all records to help identify the corresponding records on a Performance List report.

R T
The performance class record type (field: RTYPE, owner: DFHCICS, field ID: 112):

C Record output for a terminal converse.

D Record output by a user event monitoring point (EMP) DELIVER request.

F Record output for a long running transaction.

S Record output for a syncpoint request.

T Record was output for a transaction termination (detach).

Stop Time or Start Time
Stop or start time (hh:mm:ss.thm) of the transaction (owner: DFHCICS, field ID: 005 for start, 006 for stop). The transactions within the same network unit-of-work are generally displayed in either descending stop time or ascending start time sequence. This might not always be true, however, due to syncpointing within the transaction, and to the difficulties involved in synchronizing the STORE CLOCK (STCK) values between different CPUs.

Response Time
The transaction response time. This field is calculated by subtracting the

transaction Start Time (owner: DFHCICS, field ID: 005) from the transaction Stop Time (owner: DFHCICS, field ID: 006).

A B

Y in this column indicates that the transaction abended.

Tailored format: Cross-System Work Extended

You can tailor the format of the Cross-System Work report. To use the CICS PA dialog to do this, simply specify a LIST or LISTX Report Form for the Cross-System Work report. This produces the Cross-System Work Extended report like the example shown in Figure 39. The commands to request this report are:

```
CICSPA IN(SMFIN001),
       LISTX(OUTPUT(CROS0001),
             EXTERNAL(CPAXW001),
             NOPRINTMULTIPLE,PRINTSINGLE,
             BY(UOWID),
             FIELDS(TRAN,
                    RESPONSE,
                    USERID,
                    TASKNO,
                    STOP(TIMET),
                    RESPONSE,
                    DISPATCH(TIME),
                    DISPATCH(COUNT),
                    CPU(TIME),
                    SUSPEND(TIME),
                    SUSPEND(COUNT),
                    DISPWAIT(TIME),
                    DISPWAIT(COUNT),
                    IRWAIT(TIME)))
```

```
 V3R2M0                                          CICS Performance Analyzer
                                                 Cross-System Work Extended

CROS0001 Printed at 12:03:45  3/15/2011 Data from 15:41:19  7/12/2010 to 16:19:15  7/12/2010                          Page       1

 Tran Response Userid     TaskNo Stop         Response Dispatch Dispatch User CPU  Suspend  Suspend DispWait DispWait  IR Wait
        Time                     Time           Time     Time     Count    Time     Time     Count    Time     Count    Time
 CPLT    .3939 CICSUSER        6 15:41:19.419    .3939    .0782        3    .0325    .3158        3    .3149        2    .0000
 CSSY  71.4053 CICSUSER      III 15:42:30.828  71.4053  46.9670      401  17.6543  24.4382      401   9.9254      400    .0000
 CSSY   4.9137 CICSUSER       12 15:41:24.346   4.9137    .4928       66    .0476   4.4209       66   2.5618       65    .0000
 CSSY   5.3932 CICSUSER       10 15:41:24.822   5.3932    .8932       59    .2172   4.4999       59   2.7531       58    .0000
 CSSY   5.6419 CICSUSER        9 15:41:25.069   5.6419   1.6045       75    .1472   4.0374       75   2.9273       74    .0000
 CSSY   5.9801 CICSUSER       13 15:41:25.434   5.9801    .7826       87    .1627   5.1975       87   3.3042       86    .0000
 CSSY   2.9653 CICSUSER       14 15:41:22.420   2.9653   1.2597       14    .0555   1.7056       14    .0393       13    .0000
 CSSY    .4372 CICSUSER       15 15:41:19.898    .4372    .0037        1    .0034    .4335        1    .0000        0    .0000
 CSSY    .5093 CICSUSER       16 15:41:19.977    .5093    .0065        3    .0084    .5028        3    .0103        2    .0000
 CGRP   5.4980 CICSUSER       11 15:41:24.928   5.4980    .7931       69    .0613   4.7049       69   3.7141       68    .0000
 CSSY   3.3315 CICSUSER       17 15:41:22.805   3.3315    .0995       37    .0269   3.2321       37   1.3057       36    .0000
 CPLT    .5196 CICSUSER        6 15:41:29.169    .5196    .1771        3    .0316    .3425        3    .3422        2    .0000
```

Figure 39. Cross-System Work Extended report

Required CMF fields

If you are using the CICS Monitoring Control Table (MCT) Exclude/Include parameters to reduce the size of the performance class record, you must ensure that the data fields required for the Cross-System Work report and extract are not excluded.

The following table lists the fields that must be collected in the performance class records to ensure correct correlation of the data records for the Cross-System Work report and extract.

Table 1. Cross-System Work report and extract: Required CMF fields

Owner	Field ID	CICS Informal Name
DFHCICS	112	RTYPE
DFHCICS	130	RSYSID
DFHDEST	091	TDTOTCT
DFHFILE	093	FCTOTCT
DFHPROG	071	PGMNAME
DFHPROG	113	ABCODEO
DFHTASK	031	TRANNUM
DFHTASK	066	ICTOTCT
DFHTASK	097	NETUOWPX
DFHTASK	098	NETUOWSX
DFHTASK	163	FCTYNAME
DFHTASK	164	TRANFLAG
DFHTEMP	092	TSTOTCT
DFHTERM	111	LUNAME
DFHTERM	169	TERMCNNM

Transaction Group report

The Transaction Group report accepts data from one or more CICS systems, correlating the data by transaction group ID. The default is to print only the CMF performance class records that are contained in a transaction group that includes multiple performance records.

The Transaction Group report can be used to understand the correlation of the performance class records for the transactions that CICS runs as part of the same incoming work request (for example, the CWXN and CWBA transactions for CICS Web support requests).

You can request a report from all available records, or you can provide criteria to select only the records that meet specific requirements.

Report command

The Transaction Group report can be requested from a Report Set in the CICS PA dialog. Select the **Transaction Group** report in the **Performance Reports** category.

In batch, the `TRANGROUP` command is used to request the Transaction Group report.

The command to produce the default report is:

```
CICSPA TRANGROUP
```

To tailor the report, you can specify report options as follows:

```
CICSPA TRANGROUP(
            [OUTPUT(ddname),]
            [EXTERNAL(ddname),]
            [PRINTMULTIPLE,]
            [NOPRINTMULTIPLE,]
            [PRINTSINGLE,]
            [LINECOUNT(nnn),]
            [TITLE1('...sub-heading left ...'),]
            [TITLE2('...sub-heading right...'),]
            [SELECT(PERFORMANCE(INCLUDE|EXCLUDE(field1(values1),...),
                                ...))])
```

Report content

The Transaction Group report consists of a detail report and a summary report. For the detail report, each line is printed from a single CMF performance class record. Records that are part of the same transaction group are printed sequentially in groups, separated by blank lines. The reported information allows you to find the corresponding records in the Performance List report. The summary report summarizes the information from the performance class records in the detail report.

If you request this report and other reports in the same job, specify an **OUTPUT(ddname)** for each report. Output for the reports must be directed to separate SYSOUT data sets to prevent interleaving of the report lines.

The Transaction Group report is produced using an external SORT facility. An External Work Data Set is required to store the records before they are sorted. This data set is either specified explicitly using **EXTERNAL(ddname),** or CICS PA assigns one from the External Work File pool.

The records are sorted in the following order:

1. Transaction Group ID
2. Task Stop Time in reverse (or descending) order.

Note: The Stop Time, sorted in reverse (descending) order, shows the sequence of tasks within the same Transaction Group ID.

For more information on correlating the performance class data by transaction group ID, see "Correlating performance class data" on page 325.

Detail report

The Transaction Group report shown in Figure 40 was created using the command:

```
CICSPA TRANGROUP(PRINTS,PRINTM,OUTPUT(TRGP0001))
```

```
 V3R2M0                                                CICS Performance Analyzer
                                                           Transaction Group

TRGP0001 Printed at 12:03:45  3/15/2011 Data from 11:10:29  2/04/2010 to 11:33:51  2/04/2010                          Page      41

                          Brdg   Client        Request                        Fcty  Conn                 R              Response
Tran Userid   SC Origin     Tran IP Address       Type   Program  Term LUName   T/Name Name APPLID     Task T  Stop Time    Time

SALE BRENNER  U  SCHEDULE                        AP:     DFH0SAL2                           IYK2Z1V3    268 T 11:19:52.38    .0399

SALE BRENNER  U  SCHEDULE                        AP:     DFH0SAL2                           IYK2Z1V3    279 T 11:19:57.58    .0683

REM1 BRENNER  U  SCHEDULE                        AP:     DFH0REM1                           IYK2Z1V3    281 T 11:19:57.60    .0231

SALE BRENNER  U  SCHEDULE                        AP:     DFH0SAL2                           IYK2Z1V3    282 T 11:19:57.64    .0405

STAT CBAKER   TO BRIDGE     CWBA                 AP:     DFH0STAT CAAE CAAE     B/CAAE      IYK2Z1V3    292 T 11:20:12.04  10.5089
CWBA CBAKER   U  WEB            9.20.30.232      AP:     DFHWBTTA                           IYK2Z1V3    291 T 11:20:01.65    .1188
CWXN CBAKER   U  SOCKET         9.20.30.232      AP:     DFHWBXN                            IYK2Z1V3    290 T 11:20:01.54    .0169

SALE BRENNER  U  SCHEDULE                        AP:     DFH0SAL2                           IYK2Z1V3    293 T 11:20:02.81    .0568

SALE BRENNER  U  SCHEDULE                        AP:     DFH0SAL2                           IYK2Z1V3    296 T 11:20:04.33    .1340

SALE BRENNER  U  SCHEDULE                        AP:     DFH0SAL2                           IYK2Z1V3    297 T 11:20:04.33    .1326

CWBA CBAKER   U  WEB            9.20.30.232      AP:     DFHWBTTA                           IYK2Z1V3    299 T 11:20:07.37   1.0015
CWXN CBAKER   U  SOCKET         9.20.30.232      AP:     DFHWBXN                            IYK2Z1V3    298 T 11:20:06.38    .3103

CWBA CBAKER   U  WEB            9.20.30.232      AP:     DFHWBTTA                           IYK2Z1V3    302 T 11:20:12.04    .0423
CWXN CBAKER   U  SOCKET         9.20.30.232      AP:     DFHWBXN                            IYK2Z1V3    301 T 11:20:12.01    .2331

CZUX CBAKER   QD TDQUEUE                         AP:     DFH0VZUX               D/CSZX      IYK2Z1V3    304 T 11:20:19.36    .0078

SALE BRENNER  U  SCHEDULE                        AP:     DFH0SAL2                           IYK2Z1V3    307 T 11:20:20.34    .7041

SALE BRENNER  U  SCHEDULE                        AP:     DFH0SAL2                           IYK2Z1V3    308 T 11:20:20.43    .7920

CWXN CBAKER   U  SOCKET         9.20.30.232      AP:     DFHWBXN                            IYK2Z1V3    331 T 11:34:12.76  782.697
CEMT CBAKER   TO BRIDGE     CWBA                 AP:     DFHEMTP  CAAG CAAG     B/CAAG      IYK2Z1V3    354 T 11:21:55.38  13.3797
CWBA CBAKER   U  WEB            9.20.30.232      AP:     DFHWBTTA                           IYK2Z1V3    353 T 11:21:42.10    .0986
CWBA CBAKER   U  WEB            9.20.30.232      AP:                                        IYK2Z1V3    332 T 11:21:10.12    .0529

CWXN CBAKER   U  SOCKET         9.20.30.232      AP:     DFHWBXN                            IYK2Z1V3    333 T 11:25:52.65  282.577
CWBA CBAKER   U  WEB            9.20.30.232      AP:     DFHWBTTA                           IYK2Z1V3    351 T 11:21:32.85    .0378
CWBA CBAKER   U  WEB            9.20.30.232      AP:                                        IYK2Z1V3    334 T 11:21:10.12    .0485

CZUX CBAKER   QD TDQUEUE                         AP:     DFH0VZUX               D/CSZX      IYK2Z1V3    340 T 11:21:19.48    .0240
```

Figure 40. Transaction Group report (detail)

This section gives a brief description of the performance class data fields shown in the Transaction Group report. For more information, see "CMF performance class data fields" on page 263.

Tran

The Transaction ID (field: TRAN, owner: DFHTASK, field ID: 001) identifies the name of the transaction that this performance class record represents. Applications that are using Distributed Program Link (DPL) requests should use the TRANSID('xxxx') parameter on the EXEC CICS LINK PROGRAM('xxxxxxxx') command to enable better transaction/application analysis from the monitoring performance class data. If the TRANSID('xxxx')

parameter is not specified, all the performance class records on the target system for a Distributed Program Link (DPL) mirror transaction will have the same transaction ID. For example, 'CSMI' for a Distributed Program Link (DPL) request from another connected CICS system.

Userid
The User identifier of the transaction (owner: DFHCICS, field ID: 089).

SC Type of transaction start or start code (field: TTYPE, owner: DFHTASK, field ID: 004).

Origin
This field is an interpretation of the transaction origin type from byte 4 of the transaction flags field (field: TRANFLAG, owner: DFHTASK, field ID: 164) and can be used as an indicator of the source of the transaction. This field can have one of the following values:

Origin Type	Description
NONE	None
TERMINAL	Terminal
TDQUEUE	Terminal data queue
START	Start
TERM START	Terminal start
SCHEDULE	CICS BTS scheduler (CSHQ)
XM RUN	XM run transaction
BRIDGE	Bridge
SOCKET	Socket
WEB	Web
IIOP	IIOP
RRS	RRS
LU6.1 SESS	LU 6.1 session
LU6.2 SESS	LU 6.2 session
MRO SESS	MRO session
ECI SESS	ECI session
IIRQ RECVR	II Request Receiver
RZ ST TRPT	Request stream in-storage transport
IPIC SESS	IP interconnectivity session
EVENT	Event

The ***Origin Type*** is an interpretation of the primary transaction client type with which the transaction was attached using the CICS Transaction Manager.

Brdg Tran
This field contains the name of the bridge listener transaction for those transactions that are attached by the CICS 3270 Bridge interface.

Client IP Address
The client IP address (owner: DFHSOCK, field ID: 244, in CICS TS V3.2 and earlier; or 318, truncated to size, from CICS TS V4.1).

Request Type
This field describes the type of request that the performance record represents:

Description

AP: An application program request. The **Program** field will identify the initial application program name invoked for the transaction.

Note: Function shipped Distributed Program Link (DPL) requests are interpreted as application requests. In this case the **AP:** is followed by the **----** (as for other function shipping requests) to indicate the types of requests issued by the application program.

FS:---- A function shipping request. The **----** indicate the types of function shipping request:

F	File Control
I	Interval Control
D	Transient Data
S	Temporary Storage

TR:xxxx
A transaction routing request from a terminal-owning region. The 'xxxx' is the transaction routing sysid (field: RSYSID, owner: DFHCICS, field ID: 130) and identifies the connection name (sysid) of the remote system to which the transaction was routed.

Program
The Initial Program Name (field: PGMNAME, owner: DFHPROG, field ID: 071) identifies the initial application program invoked for the transaction. Depending on the type of transaction, this field contains either the application program name as defined in the transaction definition, the program name returned by a user written dynamic routing program, the application program name passed on a function shipped Dynamic Program Link (DPL) request, the initial application program name of an ONC RPC Alias Transaction, or the initial application program name of a WEB Alias Transaction. A program name of ######## indicates that the transaction was invoked using the definition of the transaction ID specified by the DTRTRAN system initialization parameter.

Term
The Terminal ID (field: TERM, owner: DFHTERM, field ID: 002) is either the terminal ID or the session ID. This field is blank if the transaction was not associated with a terminal or session facility.

LUName
This field (field: LUNAME, owner: DFHTERM, field ID: 111) is either the VTAM netname of the terminal ID (if the Access Method for the terminal is VTAM) or the VTAM APPLID of the connection for the session ID. For an EXCI connection, this field is blank. The transaction's terminal or session type can be identified from the NATURE field (byte 0) within the terminal information field (field: TERMINFO, owner: DFHTERM, field ID: 165). This field is blank if the transaction was not associated with a terminal or session facility.

Fcty T
This field is an interpretation of byte 0 of the transaction flags field (owner: DFHTASK, field ID: 164) and describes the transaction's facility type:

Type	Description
blank	None
T	Terminal or Session
S	Surrogate
D	Transient Data queue
B	Bridge Terminal

Fcty Name
The transaction's facility name (owner: DFHTASK, field ID: 163).

Conn Name
The terminal session connection name (owner: DFHTERM, field ID: 169). If the terminal facility associated with this transaction is a session, then this field is the name of the owning connection (sysid).

APPLID
The APPLID of the CICS system upon which the CMF performance record was created. This field indicates the CICS system that performed the work recorded in the record.

Task
The transaction identification number (owner: DFHTASK, field ID: 031). This is printed for all records to help identify the corresponding record on a Performance List report.

R T
The performance class record type (field: RTYPE, owner: DFHCICS, field ID: 112):

C Record output for a terminal converse.

D Record output by a user event monitoring point (EMP) DELIVER request.

F Record output for a long running transaction.

S Record output for a syncpoint request.

T Record was output for a transaction termination (detach).

Stop Time
Stop time of the transaction (owner: DFHCICS, field ID: 006). The transactions within the same network unit-of-work are generally displayed in ascending stop time sequence. This might not always be true, however, due to syncpointing within the transaction, and to the difficulties involved in synchronizing the STORE CLOCK (STCK) values between different CPUs.

Response Time
The transaction response time. This field is calculated by subtracting the transaction start time (owner: DFHCICS, field ID: 005) from the transaction stop time (owner: DFHCICS, field ID: 006).

Note: If the transaction response time is followed by an asterisk (*) then the transaction has allocated a session to another CICS system for either transaction routing, function shipping, or distributed transaction processing. This information is determined from the terminal session allocation request count field (owner: DFHTERM, field ID: 069). See the Transaction Group report in Figure 41 on page 81 for examples of transactions that illustrate this session allocation indicator.

Example: The following figure shows the Transaction Group report using PRINTS, NOPRINTM.

```
 V3R2M0                                          CICS Performance Analyzer
                                                     Transaction Group

TRGP0001 Printed at 12:03:45  3/15/2011 Data from 11:10:51  2/14/2010 to 11:34:13  2/14/2010                        Page       5

                           Brdg    Client       Request                        Fcty  Conn                R             Response
Tran Userid   SC  Origin    Tran  IP Address      Type   Program  Term LUName   T/Name Name APPLID     Task T  Stop Time    Time

3333 BRENNER  TO  TERMINAL                       AP:     ######## S23C IGCS23C  T/S23C      IYK2Z1V3    300 T 11:20:08.00    .0028

0AYM BRENNER  TO  TERMINAL                       AP:     DFH0PAY0 S23C IGCS23C  T/S23C      IYK2Z1V3    303 T 11:20:15.96    .0022

PAY1 BRENNER  TP  TERMINAL                       AP:     DFH0PAY1 S23C IGCS23C  T/S23C      IYK2Z1V3    305 T 11:20:19.64    .0747

SALE BRENNER  U   XM RUN                         AP:     DFH0SAL2                           IYK2Z1V3    306 T 11:20:19.63    .0715

CSAC BRENNER  TO  TERMINAL                       AP:     DFHACP   S23C IGCS23C  T/S23C      IYK2Z1V3    313 T 11:20:44.09    .0017

CBAM BRENNER  TO  TERMINAL                       AP:     DFHECBAM S23C IGCS23C  T/S23C      IYK2Z1V3    315 T 11:20:50.77   3.7993

RMNU BRENNER  TO  TERMINAL                       AP:             S23C IGCS23C  T/S23C      IYK2Z1V3    323 T 11:20:54.39    .0317*

AMNU BRENNER  TO  MRO SESS                       AP:     DFHSAMNU R11  IYK2Z1V3 S/S23C CJB3 IYK2Z1V1    158 T 11:20:54.39    .0228

AINQ BRENNER  TO  TERMINAL                       AP:     DFHSAALL S23C IGCS23C  T/S23C      IYK2Z1V3    328 T 11:21:09.56    .0020

AINQ BRENNER  TO  TERMINAL                       AP:     DFHSAALL S23C IGCS23C  T/S23C      IYK2Z1V3    341 T 11:21:19.47    .0020

AMNU BRENNER  TP  TERMINAL                       AP:     DFHSAMNU S23C IGCS23C  T/S23C      IYK2Z1V3    356 T 11:21:54.06    .0026

AUPD BRENNER  TO  TERMINAL                       AP:     DFHSAALL S23C IGCS23C  T/S23C      IYK2Z1V3    358 T 11:22:10.66    .0020

1111 BRENNER  TO  TERMINAL                       AP:     ######## S23C IGCS23C  T/S23C      IYK2Z1V3    360 T 11:22:15.07    .0021

AUPD BRENNER  TO  TERMINAL                       AP:     DFHSAALL S23C IGCS23C  T/S23C      IYK2Z1V3    362 T 11:22:19.77    .0046

RUPD BRENNER  TO  TERMINAL                       AP:             S23C IGCS23C  T/S23C      IYK2Z1V3    364 T 11:22:36.07    .0029*

AUPD CBAKER   TO  MRO SESS                       AP:     DFHSAALL R11  IYK2Z1V3 S/S23C CJB3 IYK2Z1V1    192 T 11:22:36.07    .0013

CSAC BRENNER  TO  TERMINAL                       AP:     DFHACP   S23C IGCS23C  T/S23C      IYK2Z1V3    379 T 11:24:25.57    .0023

RING BRENNER  TO  TERMINAL                       AP:     ######## S23C IGCS23C  T/S23C      IYK2Z1V3    547 T 11:26:23.88    .0020

RINQ BRENNER  TO  TERMINAL                       AP:             S23C IGCS23C  T/S23C      IYK2Z1V3    548 T 11:26:30.17    .0036*

AINQ CBAKER   TO  MRO SESS                       AP:     DFHSAALL R11  IYK2Z1V3 S/S23C CJB3 IYK2Z1V1    232 T 11:26:30.17    .0014

AADD BRENNER  TO  TERMINAL                       AP:     DFHSAALL S23C IGCS23C  T/S23C      IYK2Z1V3    551 T 11:26:41.64    .0016

AADD BRENNER  TP  TERMINAL                       AP:     DFHSAALL S23C IGCS23C  T/S23C      IYK2Z1V3    561 T 11:27:02.87    .0026

AINQ BRENNER  TO  TERMINAL                       AP:     DFHSAALL S23C IGCS23C  T/S23C      IYK2Z1V3    564 T 11:27:11.57    .0023
```

Figure 41. Transaction Group report (detail): using PRINTS,NOPRINTM

Summary report

The Transaction Group Summary report summarizes the information from the performance class records in the detail report.

```
 V3R2M0                                          CICS Performance Analyzer
                                                Transaction Group – Summary

TRGP0001 Printed at 12:03:45  3/15/2011 Data from 11:10:51  3/24/2010 to 11:34:13  3/24/2010                        Page      45

  Origin                    Average    Average    Average    Average    Average    Average    Average    Average    Average
   Type      Transactions   Response   Dispatch   CPU Time   Suspend   DispWait    IR Wait   RMI Susp    FC Wait    SO Wait

BRIDGE              17       10.140       .000       .000       .010       .000       .000       .000       .000       .000
MRO SESS           163         .634       .000       .000       .001       .000       .001       .000       .000       .000
NONE                51       82.697       .001       .000       .082       .000       .000       .000       .000       .000
SCHEDULE            62         .280       .000       .000       .000       .000       .000       .000       .000       .000
SOCKET              50       44.630       .000       .000       .045       .000       .000       .000       .000       .045
START               22         .332       .000       .000       .000       .000       .000       .000       .000       .000
TDQUEUE             23         .012       .000       .000       .000       .000       .000       .000       .000       .000
TERM START          10         .018       .000       .000       .000       .000       .000       .000       .000       .000
TERMINAL           860        4.150       .000       .000       .004       .000       .000       .000       .000       .000
WEB                 60         .154       .000       .000       .000       .000       .000       .000       .000       .000
XM RUN              16         .424       .000       .000       .000       .000       .000       .000       .000       .000
             ------------  --------   --------   --------   --------   --------   --------   --------   --------   --------
TOTAL             1334        7.747       .000       .000       .008       .000       .000       .000       .000       .002
```

Figure 42. Transaction Group Summary report

The Transaction Group Summary report contains the following information:

Origin Type
The transaction origin type; see “Detail report” on page 77 for details.

Transactions
The total number of transactions completed.

Average Response
The average response time. This field is calculated by subtracting the transaction start time (owner: DFHCICS, field ID: 005) from the transaction stop time (owner: DFHCICS, field ID: 006).

Average Dispatch
The average dispatch time (owner: DFHTASK, field ID: 007).

Average CPU Time
The average CPU time (owner: DFHTASK, field ID: 008).

Average Suspend
The average suspend time (owner: DFHTASK, field ID: 014).

Average DispWait
The average dispatch wait time (owner: DFHTASK, field ID: 102).

Average IR Wait Time
The average inter-region (MRO) I/O wait time (owner: DFHTERM, field ID: 100).

Average RMI Susp
The average RMI suspend time (owner: DFHTASK, field ID: 171).

Average FC Wait
The average file I/O wait time (owner: DFHFILE, field ID: 063).

Average SO Wait
The average inbound socket I/O wait time (owner: DFHSOCK, field ID: 241).

Required CMF fields

If you are using the CICS Monitoring Control Table (MCT) Exclude/Include parameters to reduce the size of the performance class record, you must ensure that the data fields required for the Transaction Group report are not excluded.

The following table lists the fields that must be collected in the performance class records to ensure correct correlation of the data records for the Transaction Group report.

Table 2. Transaction Group report: Required CMF fields

Owner	Field ID	CICS Informal Name
DFHCICS	112	RTYPE
DFHCICS	130	RSYSID
DFHDEST	091	TDTOTCT
DFHFILE	063	FCIOWTT
DFHFILE	093	FCTOTCT
DFHPROG	071	PGMNAME
DFHSOCK	241	SOIOWTT
DFHSOCK	244 (CICS TS V3.2 and earlier) or 318 (from CICS TS V4.1)	CLIPADDR

Table 2. Transaction Group report: Required CMF fields (continued)

Owner	Field ID	CICS Informal Name
DFHSOCK	245	TCPSRVCE
DFHSOCK	246	PORTNUM
DFHSOCK	299	SOOIOWTT
DFHTASK	007	USRDISPT
DFHTASK	008	USRCPUT
DFHTASK	014	SUSPTIME
DFHTASK	031	TRANNUM
DFHTASK	066	ICTOTCT
DFHTASK	082	TRNGRPID
DFHTASK	097	NETUOWPX
DFHTASK	098	NETUOWSX
DFHTASK	102	DISPWTT
DFHTASK	124	BRDGTRAN
DFHTASK	163	FCTYNAME
DFHTASK	164	TRANFLAG
DFHTASK	171	RMISUSP
DFHTEMP	092	TSTOTCT
DFHTERM	069	TCALLOCT
DFHTERM	100	IRIOWTT
DFHTERM	111	LUNAME
DFHTERM	169	TERMCNNM

BTS report

The BTS report accepts data from one or more CICS systems, correlating the data by CICS BTS process ID (root activity ID).

You can request a report from all available records, or you can provide criteria to select only the records that meet specific requirements.

Report command

The BTS report can be requested from a Report Set in the CICS PA dialog. Select the **BTS** report in the **Performance Reports** category.

In batch, the `BTS` command is used to request the BTS report.

The command to produce the default report is:

```
CICSPA BTS
```

To tailor the report, you can specify report options as follows:

```
CICSPA BTS(
      [OUTPUT(ddname),]
      [EXTERNAL(ddname),]
      [LINECOUNT(nnn),]
      [TITLE1('...sub-heading left ...'),]
      [TITLE2('...sub-heading right...'),]
      [SELECT(PERFORMANCE(INCLUDE|EXCLUDE(field1(values1),...),...))])
```

Report content

On the BTS report, each line is printed from a single CMF performance class record. Records that are part of the same CICS BTS Process ID (Root Activity ID) are printed sequentially in groups, separated by blank lines. The printed information allows you to find the corresponding records in the Performance List report.

The BTS report is produced using an external SORT facility. An External Work Data Set is required to store the records before they are sorted. This data set is either specified explicitly using **EXTERNAL(ddname),** or CICS PA assigns one from the External Work File pool.

The records are sorted in the following order:
1. CICS BTS Process ID (Root Activity ID)
2. Transaction Identification Number
3. Task Stop Time in ascending order

Note: The Transaction Identification Number is only used for those transactions that have had some CICS BTS request activity, as determined from the Total Request count fields, but which do not have a CICS BTS Process ID (Root Activity ID).

For more information on correlating the performance class data by CICS BTS Process ID, see “Correlating performance class data” on page 325.

Figure 43 on page 85 shows an example of the BTS report.

```
 V3R2M0                                          CICS Performance Analyzer
                                              Business Transaction Services (BTS)

CBTS0001 Printed at 12:03:45  3/15/2011 Data from 11:10:51  3/24/2010 to 11:34:13  3/24/2010                        Page       1

                                                 Process                  Pro/Act Cont'er  Event        R             Response
Tran SC TranType Process Name                      Type   Activity Name     Reqs     Reqs    Reqs   Task T  Stop Time    Time

SAL1 TP U                                                                     2       2       0    146 T 11:17:04.85    .6881

PAY1 TP U                                                                     2       0       0    160 T 11:17:12.21    .2010

SAL1 TP U                                                                     2       2       0    174 T 11:17:53.63    .1657

PAY1 TP U                                                                     2       0       0    197 T 11:18:14.42    .0861

SAL1 TP U                                                                     2       2       0    211 T 11:18:47.27    .1222

SAL1 TP U                                                                     2       2       0    239 T 11:19:40.33    .1835

PAY1 TP U                                                                     2       0       0    294 T 11:20:04.20    .1390

PAY1 TP U                                                                     2       0       0    305 T 11:20:19.64    .0747

RED1 U  U      R SALES111111                       ORDER    CREDIT-CHECK      0       2       1    176 T 11:17:54.05    .5333
STOC U  U      R SALES111111                       ORDER    STOCK-CHECK       0       2       1    177 T 11:17:54.05    .5145
SALE U  U      R SALES111111                       ORDER    DFHROOT          10       5       4    175 T 11:17:54.05    .5675
INV1 U  U        SALES111111                       ORDER    INVOICE-BUILD     0       1       1    178 T 11:17:54.09    .0359
DEL1 U  U        SALES111111                       ORDER    DELIV-NOTE        0       1       1    179 T 11:17:55.29   1.2323
SALE U  U        SALES111111                       ORDER    DFHROOT           0       0       0    180 T 11:17:55.31   1.2198
SALE U  U        SALES111111                       ORDER    DFHROOT           1       3       2    183 T 11:17:55.37    .0800
SALE U  U        SALES111111                       ORDER    DFHROOT           1       3       5    184 T 11:17:55.42    .0519
SALE U  U        SALES111111                       ORDER    DFHROOT           2       2       1    186 T 11:18:00.65    .0566
REM1 U  U        SALES111111                       ORDER    SEND-REMINDER     0       1       1    187 T 11:18:00.68    .0243
SALE U  U        SALES111111                       ORDER    DFHROOT           1       0       3    188 T 11:18:00.72    .0389
SALE U  U        SALES111111                       ORDER    DFHROOT           2       2       1    191 T 11:18:05.92    .0826
REM1 U  U        SALES111111                       ORDER    SEND-REMINDER     0       1       1    192 T 11:18:05.96    .0367
SALE U  U        SALES111111                       ORDER    DFHROOT           1       0       3    193 T 11:18:06.04    .0824
SALE U  U        SALES111111                       ORDER    DFHROOT           2       2       1    194 T 11:18:11.13    .0463
REM1 U  U        SALES111111                       ORDER    SEND-REMINDER     0       1       1    195 T 11:18:11.16    .0282
SALE U  U        SALES111111                       ORDER    DFHROOT           1       0       3    196 T 11:18:11.20    .0437
SALE U  U      R SALES111111                       ORDER    DFHROOT           0       1       3    198 T 11:18:14.42    .0821
SALE U  U        SALES111111                       ORDER    DFHROOT           0       0       0    199 T 11:18:15.03    .6101

RED1 U  U      R SALES222222                       ORDER    CREDIT-CHECK      0       2       1    213 T 11:18:47.79    .6162
STOC U  U      R SALES222222                       ORDER    STOCK-CHECK       0       2       1    214 T 11:18:47.79    .6072
SALE U  U      R SALES222222                       ORDER    DFHROOT          10       5       4    212 T 11:18:47.79    .6282
INV1 U  U        SALES222222                       ORDER    INVOICE-BUILD     0       1       1    215 T 11:18:47.82    .0312
DEL1 U  U        SALES222222                       ORDER    DELIV-NOTE        0       1       1    216 T 11:18:49.58   1.7859
SALE U  U        SALES222222                       ORDER    DFHROOT           0       0       0    217 T 11:18:49.59   1.7700
SALE U  U        SALES222222                       ORDER    DFHROOT           1       3       2    219 T 11:18:49.63    .0488
SALE U  U        SALES222222                       ORDER    DFHROOT           1       3       5    220 T 11:18:49.67    .0399
SALE U  U        SALES222222                       ORDER    DFHROOT           2       2       1    222 T 11:18:54.91    .0479
REM1 U  U        SALES222222                       ORDER    SEND-REMINDER     0       1       1    223 T 11:18:54.93    .0244
SALE U  U        SALES222222                       ORDER    DFHROOT           1       0       3    224 T 11:18:54.97    .0400
SALE U  U        SALES222222                       ORDER    DFHROOT           2       2       1    225 T 11:19:00.14    .0408
REM1 U  U        SALES222222                       ORDER    SEND-REMINDER     0       1       1    226 T 11:19:00.17    .0248
SALE U  U        SALES222222                       ORDER    DFHROOT           1       0       3    227 T 11:19:00.21    .0386
SALE U  U        SALES222222                       ORDER    DFHROOT           2       2       1    228 T 11:19:05.39    .0419
```

Figure 43. BTS report

The following fields are shown on the CICS Business Transaction Services Report. For more information on the fields, see "CMF performance class data fields" on page 263.

Tran
The Transaction ID (field: TRAN, owner: DFHTASK, field ID: 001) identifies the name of the transaction that this performance class record represents. Applications that are using Distributed Program Link (DPL) requests should use the TRANSID('xxxx') parameter on the EXEC CICS LINK PROGRAM('xxxxxxxx') command to enable better transaction/application analysis from the monitoring performance class data. If the TRANSID('xxxx') parameter is not specified, all the performance class records on the target system for a Distributed Program Link (DPL) mirror transaction will have the same Transaction ID. For example, 'CSMI' for a Distributed Program Link (DPL) request from another connected CICS system.

SC The Transaction Start Type (field: STYPE, owner: DFHTASK, field ID: 004).

TranType
This column describes the transaction type:

```
S           System transaction
U           User transaction
 M          Mirror transaction
  D         DPL Mirror transaction
   O        ONC RPC Alias transaction
    W       WEB Alias transaction
     B      Bridge transaction
      -     Reserved
       R    CICS BTS Run (ACQPROCESS or activity) transaction synchronous
```

The transaction type is represented as an interpretation of byte 1 of the transaction flags field (owner: DFHTASK, field ID: 164).

Process Name
The name of the CICS Business Transaction Service (BTS) process (owner: DFHCBTS, field ID: 200) of which the user task formed part.

Process Type
The process-type of the CICS BTS process (owner: DFHCBTS, field ID: 201) of which the user task formed part.

Activity Name
The name of the CICS BTS activity (owner: DFHCBTS, field ID: 204) that the user task implemented.

Pro/Act Reqs
The total number of CICS BTS process and activity requests (owner: DFHCBTS, field ID: 215) issued by the user task.

Cont'er Reqs
The total number of CICS BTS process container and activity container requests (owner: DFHCBTS, field ID: 218) issued by the user task.

Event Reqs
The total number of CICS BTS event-related requests (owner: DFHCBTS, field ID: 222) issued by the user task.

Task
The transaction identification number (owner: DFHTASK, field ID: 031). This is printed for all records to help identify the corresponding records on a Performance List report.

R T
The performance class record type (field: RTYPE, owner: DFHCICS, field ID: 112):

C Record output for a terminal converse.

D Record output by a user event monitoring point (EMP) DELIVER request.

F Record output for a long running transaction.

S Record output for a syncpoint request.

T Record output for a transaction termination (detach).

Stop Time
Stop time of the transaction (owner: DFHCICS, field ID: 006). The transactions within the same network unit-of-work are generally displayed in ascending stop time sequence. This might not always be true, however, due to syncpointing within the transaction, and to the difficulties involved in synchronizing the STORE CLOCK (STCK) values between different CPUs.

Response Time
The transaction response time. This field is calculated by subtracting the transaction start time (owner: DFHCICS, field ID: 005) from the transaction stop time (owner: DFHCICS, field ID: 006).

For more information on CICS Business Transaction Services (BTS), see the *CICS Business Transaction Services.*

Required CMF fields

If you are using the CICS Monitoring Control Table (MCT) Exclude/Include parameters to reduce the size of the performance class record, you must ensure that the data fields required for the BTS report are not excluded.

The following table lists the fields that must be collected in the performance class records to ensure correct correlation of the data records.

Table 3. BTS report: Required CMF fields

Owner	Field ID	CICS Informal Name
DFHCBTS	200	PRCSNAME
DFHCBTS	201	PRCSTYPE
DFHCBTS	202	PRCSID
DFHCBTS	204	ACTVTYNM
DFHCBTS	215	BATOTPCT
DFHCBTS	218	BATOTCCT
DFHCBTS	222	BATOTECT
DFHCICS	112	RTYPE
DFHTASK	031	TRANNUM
DFHTASK	164	TRANFLAG

Workload Activity report

The Workload Activity report provides a transaction response time analysis by MVS Workload Manager (WLM) service and report class. This can be used in conjunction with the z/OS Resource Measurement Facility (RMF) workload activity reports to understand from a CICS perspective how well your CICS transactions are meeting their response time goals.

The Workload Activity List report is a cross-system report that correlates CMF performance class data from single or multiple CICS systems for each network unit-of-work. Importantly, this report ties MRO and function shipping tasks to their originating task so that their impact on response time can be assessed.

The Workload Activity Summary report summarizes response time by WLM service and report classes.

The report processes all CMF transaction performance class records for network units-of-work containing multiple performance records as well as those with only a single performance record.

You can request a report from all available records, or you can specify selection criteria to request a report from only the records that meet specific requirements.

Report command

The Workload Activity report can be requested from a Report Set in the CICS PA dialog. Select the **Workload Activity** report in the **Performance Reports** category.

In batch, the `WORKLOAD` or `WLM` command is used to request the Workload Activity report.

You can request a detailed list of transaction activity, a summary report, or both.

The command to produce the default report, a summary of BTE transactions, is:

```
CICSPA WORKLOAD
```

or

```
CICSPA WORKLOAD(SUMMARY)
```

To produce a summary report of BTE and EXE Y transactions:

```
CICSPA WORKLOAD(SUMMARY(EXE))
```

To produce a list report detailing BTE, EXE Y, and EXE N transactions:

```
CICSPA WORKLOAD(LIST)
```

To tailor the report, you can specify report options as follows:

```
CICSPA WORKLOAD(
              [OUTPUT(ddname),]
              [EXTERNAL(ddname),]
              [SUMMARY[(EXE)],]
              [LIST,]
              [PEAK(percentile),]
              TASKORDER(START|STOP)
              [LINECount(nnn),]
```

```
[TITLE1('...up to 64 characters...'),]
[TITLE2('...up to 64 characters...'),]
[SELECT(PERFORMANCE(INCLUDE|EXCLUDE(field1(values1),...),
                    ...))])
```

Report content

The Workload Activity report consists of a List report and a Summary report. For the List report, each line is printed from a single CMF performance class record. Records that are part of the same network unit-of-work are printed sequentially in groups, each group separated by a blank line. The printed information allows you to find the corresponding records in the Performance List report. The Summary report summarizes the information by Service Class and by Report Class.

The Workload Activity report is produced using an external SORT facility. An External Work Data Set is required to store the records before they are sorted. This data set is either specified explicitly using **EXTERNAL(ddname),** or CICS PA assigns one from the External Work File pool.

Note: If only the Summary report is requested, without EXE and without the List report, no external SORT is required.

The records are sorted in the following order:

1. Network unit-of-work NETNAME
2. Network unit-of-work ID
3. Syncpoint count concatenated with either:
   - Task stop time in descending (reverse) order

     or
   - Task start time in ascending order

In the third sort field, the syncpoint count is used to resolve unsynchronized STORE CLOCK (STCK) values between systems. The syncpoint count and stop time (or start time) show the sequence of tasks within the network unit-of-work. In some cases (for example, where user event monitor points (EMPs) are used), the syncpoint count does not reflect the sequence of events within a network unit-of-work. For these instances, all the task records are printed, but not necessarily in the order they happened. You can tell that this situation exists if the stop times are not in descending order (or the start times are not in ascending order).

For more information on correlating the performance class data by network unit-of-work ID, see “Correlating performance class data” on page 325.

List report

The Workload Activity report shown in Figure 44 on page 90 was created using the command:

```
CICSPA WORKLOAD(LIST,OUTPUT(ddname))
```

```
 V3R2M0                                          CICS Performance Analyzer
                                               Workload Manager Activity List

WKLD0001 Printed at 12:03:45  3/15/2011 Data from 15:47:53  2/01/2010 to 15:58:53  2/01/2010                        Page       1

                                   Request          Fcty  Conn Service  Report                  R                  Response A
Tran Userid   SC TranType Term  LUName   Type   Program  T/Name Name Class    Class    APPLID     Task T  P  C  Stop Time   Time   B

FINA STEVEP   TP          <AAK CICPTOR1 AP:     FINANCE  S/0005 53T1 FINSCLAS FINRCLAS CICPAOR1     44 T EXE Y 15:57:53.92   .5239
FINS STEVEP   TP          0005 TCP00005 TR:AOR1          T/0005      FINSCLAS FINRCLAS CICPTOR1     73 T BTE   15:57:53.93   .5612

STOA SHIRLEY  TP          <AAK CICPTOR1 AP:     STOCK    S/0006 53T1 STOSCLAS STORCLAS CICPAOR1     46 T EXE Y 15:57:54.01   .8574
STOS SHIRLEY  TP          0006 TCP00006 TR:AOR1          T/0006      STOSCLAS STORCLAS CICPTOR1     78 T BTE   15:57:54.02   .9123

ORDQ SYLVIA   TO          0011 TCP00011 AP:     ORDRINQ  T/0011      QUIKSERV QUIKSERV CICPAOR1     79 T BTE   15:57:55.12   .3762

ORDQ JOHNX    TO          0012 TCP00012 AP:     ORDRINQ  T/0012      QUIKSERV QUIKSERV CICPAOR1     82 T BTE   15:50:55.23   .4321

ORDU SYLVIA   TO          0011 TCP00011 AP:     ORDRUPD  T/0011      LONGSERV LONGSERV CICPAOR1     98 T BTE   15:54:56.13  1.4581

ORDU JOHNX    TO          0012 TCP00012 AP:     ORDRUPD  T/0012      LONGSERV LONGSERV CICPAOR1    109 T BTE   15:58:56.17  1.2394
```

Figure 44. Workload Activity List report

The following fields are shown on the Workload Activity List report. For more information on these fields, see "CMF performance class data fields" on page 263.

Tran
The Transaction ID (field: TRAN, owner: DFHTASK, field ID: 001) identifies the name of the transaction that this performance class record represents. Applications that are using Distributed Program Link (DPL) requests should use the TRANSID('xxxx') parameter on the EXEC CICS LINK PROGRAM('xxxxxxxx') command to enable better transaction/application analysis from the monitoring performance class data. If the TRANSID('xxxx') parameter is not specified, all the performance class records on the target system for a Distributed Program Link (DPL) mirror transaction will have the same transaction ID. For example, 'CSMI' for a Distributed Program Link (DPL) request from another connected CICS system.

Userid
The User identifier of the transaction (owner: DFHCICS, field ID: 089).

SC Type of transaction start or start code (owner: DFHTASK, field ID: 004).

TranType
This column describes the transaction type:

```
 S          System transaction
 U          User transaction
  M         Mirror transaction
   D        DPL Mirror transaction
    O       ONC RPC Alias transaction
     W      WEB Alias transaction
      B     Bridge transaction
       -    Reserved
        R   CICS BTS Run (ACQPROCESS or activity) transaction synchronous
```

The transaction type is represented as an interpretation of byte 1 of the transaction flags field (owner: DFHTASK, field ID: 164).

Term
The Terminal ID (field: TERM, owner: DFHTERM, field ID: 002) is either the terminal ID or the session ID. This field is blank if the transaction was not associated with a terminal or session facility.

LUName
The LUname (field: LUNAME, owner: DFHTERM, field ID: 111) is either the VTAM netname of the terminal ID (if the Access Method for the terminal is VTAM) or the VTAM APPLID of the connection for the session ID. For an EXCI connection, this field is blank. The transaction's terminal or session type can be identified from the NATURE field (byte 0) within the terminal

information field (field: TERMINFO, owner: DFHTERM, field ID: 165). This field is blank if the transaction was not associated with a terminal or session facility.

Request Type

This field describes the type of request that the performance record represents:

	Description
AP:	An application program request. The **Program** field will identify the initial application program name invoked for the transaction. **Note:** Function shipped Distributed Program Link (DPL) requests are interpreted as application requests. In this case the **AP:** is followed by the '----' (as for other function shipping requests) to indicate the types of requests issued by the application program.
FS:----	A function shipping request. The '----' indicate the types of function shipping request: **F** File Control **I** Interval Control **D** Transient Data **S** Temporary Storage
TR:xxxx	A transaction routing request from a terminal-owning region. The *xxxx* is the transaction routing sysid from the RSYSID field (owner: DFHCICS, field ID: 130) and identifies the connection name (sysid) of the remote system to which the transaction was routed.

Program

The Initial Program Name (field: PGMNAME, owner: DFHPROG, field ID: 071) identifies the initial application program invoked for the transaction. Depending on the type of transaction, this field contains either the application program name as defined in the transaction definition, the program name returned by a user written dynamic routing program, the application program name passed on a function shipped Dynamic Program Link (DPL) request, the initial application program name of an ONC RPC Alias Transaction, or the initial application program name of a WEB Alias Transaction. A program name of ******** indicates that the transaction was invoked using the definition of the transaction ID specified by the DTRTRAN system initialization parameter.

Fcty T

This field is an interpretation of byte 0 of the transaction flags field (owner: DFHTASK, field ID: 164) and describes the transaction's facility type:

Type	Description
blank	None
T	Terminal or Session
S	Surrogate
D	Transient Data queue
B	Bridge Terminal

Fcty Name

The transaction's facility name (owner: DFHTASK, field ID: 163).

Conn Name

The terminal session connection name (owner: DFHTERM, field ID: 169). If the terminal facility associated with this transaction is a session, then this field is the name of the owning connection (sysid).

Service Class
The MVS Workload Manager (WLM) service class for this transaction. This field is blank if there are no transaction classification rules defined for CICS subsystems in the active MVS Workload Manager (WLM) service policy or the transaction was WLM-classified in another CICS region.

For an EXE Y transaction, the Service Class is derived from the related BTE transaction. For an EXE N transaction, the Service Class is blank since it cannot be determined as the transaction was not complete.

Report Class
The MVS Workload Manager (WLM) report class for this transaction. This field is blank if there are no transaction classification rules defined for CICS subsystems in the active MVS Workload Manager (WLM) service policy or the transaction was WLM-classified in another CICS region.

For an EXE Y transaction, the Report Class is derived from the related BTE transaction. For an EXE N transaction, the Report Class is blank since it cannot be determined as the transaction was not complete.

APPLID
The APPLID of the CICS system upon which the CMF performance record was created. This field indicates the CICS system that performed the work recorded in the record.

Task
The transaction identification number (owner: DFHTASK, field ID: 031). This is printed for all records to help identify the corresponding records on a Performance List report.

R T
The performance class record type (field: RTYPE, owner: DFHCICS, field ID: 112):

C Record output for a terminal converse.

D Record output by a user event monitoring point (EMP) DELIVER request.

F Record output for a long running transaction.

S Record output for a syncpoint request.

T Record output for a transaction termination (detach).

P This field describes the MVS Workload Manager phase as reported by CICS. It can be either:

BTE The *begin-to-end phase* takes place in the first region to begin processing a transaction.

EXE The *execution phase* takes place in an application owning region (AOR) and a file owning region (FOR). However, only the *execution phase* that takes place in an application owning region (AOR) is reported to the MVS Workload Manager.

For a detailed explanation about Workload Manager state information, see *OS/390 MVS Workload Management Services.*

C This field indicates the completion status of an *execution phase* of the work request as reported by CICS to the MVS Workload Manager. It can be either:

blank This performance class record is part of the *begin-to-end phase* of a transaction.

Y The entire *execution phase* of the work request, a transaction, has now completed.

N Only a portion of the *execution phase* of the work request, a transaction, has completed.

Stop Time or Start Time
Stop or start time (hh:mm:ss.thm) of the transaction (owner: DFHCICS, field ID: 005 for start, 006 for stop). The transactions within the same network unit-of-work are generally displayed in either descending stop time or ascending start time sequence. This might not always be true, however, due to syncpointing within the transaction, and to the difficulties involved in synchronizing the STORE CLOCK (STCK) values between different CPUs.

Response Time
The transaction response time. This field is calculated by subtracting the transaction start time (owner: DFHCICS, field ID: 005) from the transaction stop time (owner: DFHCICS, field ID: 006).

A B
Y in this column indicates that the transaction abended.

Summary report

The Workload Activity Summary report provides summaries by Service Class and by Report Class of the transaction data detailed in the Workload Activity List report.

```
 V3R2M0                                                CICS Performance Analyzer
                                        Workload Manager Activity Summary by Service Class

WKLD0001 Printed at 12:03:45  3/15/2011 Data from 15:47:53  2/01/2010 to 15:58:53  2/01/2010

Service                                       -------------- Response Time --------------
Class      APPLID      Phase         #Tasks     Average     Std Dev     90% Peak    Maximum

FINSCLAS   CICPTOR1    BTE              176       .5665       .4369       .8753      1.3745
           CICPAOR1    EXE              169       .5239       .4564       .8280      1.1684
STOSCLAS   CICPTOR1    BTE             2123       .9265       .3981      1.2675      2.0246
           CICPAOR1    EXE             2078       .8639       .3627      1.1927      1.8327
           CICPTOR2    BTE                2       .9265       .3981      1.2675      1.0040
STOSCLAS   *Total*     BTE             2125       .9265       .3981      1.2675      2.0246
           *Total*     EXE             2078       .8639       .3627      1.1927      1.8327
QUIKSERV   CICPAOR1    BTE             5476       .3846       .1976       .4673       .6571
LONGSERV   CICPAOR1    BTE             1958      1.5861       .8392      2.2179      5.5094
*  Grand Total   *     BTE             9735       .9488       .4012      1.0079      5.5094
*  Grand Total   *     EXE             2247       .7689       .6211      1.0040      1.8327

 V3R2M0                                                CICS Performance Analyzer
                                        Workload Manager Activity Summary by Report Class

WKLD0001 Printed at 12:03:45  3/15/2011 Data from 09:32:04  6/21/2010 to 10:43:39  6/21/2010


Report                                        -------------- Response Time --------------
Class      APPLID      Phase         #Tasks     Average     Std Dev     90% Peak    Maximum

FINSCLAS   CICPTOR1    BTE              176       .5665       .4369       .8753      1.3745
           CICPAOR1    EXE              169       .5239       .4564       .8280      1.1684
STOSCLAS   CICPTOR1    BTE             2123       .9265       .3981      1.2675      2.0246
           CICPAOR1    EXE             2078       .8639       .3627      1.1927      1.8327
           CICPTOR2    BTE                2       .9265       .3981      1.2675      1.0040
STOSCLAS   *Total*     BTE             2125       .9265       .3981      1.2675      2.0246
           *Total*     EXE             2078       .8639       .3627      1.1927      1.8327
QUIKSERV   CICPAOR1    BTE             5476       .3846       .1976       .4673       .6571
LONGSERV   CICPAOR1    BTE             1958      1.5861       .8392      2.2179      5.5094
*  Grand Total   *     BTE             9735       .9488       .4012      1.0079      5.5094
*  Grand Total   *     EXE             2247       .7689       .6211      1.0040      1.8327
```

Figure 45. Workload Activity Summary report

The following columns appear on the report:

Service Class
The MVS Workload Manager (WLM) service class. ***Other*** indicates the service class is not available.

Report Class
The MVS Workload Manager (WLM) report class. ***Other*** indicates the report class is not available.

APPLID
The APPLID of the CICS system upon which the CMF performance records were created. This field indicates the CICS system that performed the work recorded in the records.

Phase
This field describes the MVS Workload Manager phase as reported by CICS. It can be either:

BTE For those transactions that completed a *begin-to-end* phase.

EXE For those transactions that completed an entire *execution* phase where work runs in a non-originating region.

#Tasks
The total number of transactions completed.

Average Response Time
The average response time.

Std Dev Response Time
The standard deviation of the response times. If this value is greater than or nearing the average response time, the distribution of response times will probably not be a normal distribution; for example, possibly skewed or with multiple peaks.

nnn% Peak Response Time
nnn% of transactions have a response time less than or equal to this response time. This is a statistical estimate assuming a normal distribution.

Maximum Response Time
The maximum response time for any transaction within this Service Class or Report Class.

Required CMF fields

If you are using the CICS Monitoring Control Table (MCT) Exclude/Include parameters to reduce the size of the performance class record, you must ensure that the data fields required for the Workload Activity report are not excluded.

The following table lists the fields that must be collected in the performance class records to ensure correct correlation of the data records for the Workload Activity report.

Table 4. Workload Activity report: Required CMF fields

Owner	Field ID	CICS Informal Name
DFHCICS	112	RTYPE
DFHCICS	130	RSYSID
DFHCICS	167	SRVCLASS
DFHCICS	168	RPTCLASS
DFHDEST	091	TDTOTCT
DFHFILE	093	FCTOTCT
DFHPROG	071	PGMNAME
DFHTASK	031	TRANNUM

Table 4. Workload Activity report: Required CMF fields (continued)

Owner	Field ID	CICS Informal Name
DFHTASK	066	ICTOTCT
DFHTASK	097	NETUOWPX
DFHTASK	098	NETUOWSX
DFHTASK	163	FCTYNAME
DFHTASK	164	TRANFLAG
DFHTEMP	092	TSTOTCT
DFHTERM	111	LUNAME
DFHTERM	169	TERMCNNM

Transaction Tracking List report

The Transaction Tracking List report provides performance data for groups of related transactions. This allows monitoring and measurement of transaction performance from the perspective of transaction flow. The report shows how a process flowed from one transaction or system to the next and back again.

The report combines CMF records for each originating transaction and its subordinate (group) transactions. Group transactions are identified by sharing the same transaction group ID with other transactions or by having a PHCOUNT > 0.

You can request a report from all available records, or you can specify selection criteria to request a report from only the records that meet specific requirements. The SELECT and SELGRP commands enable both preprocessing of individual records and postprocessing of transaction groups and their originating transaction.

Report command

The Transaction Tracking List report can be requested from a Report Set in the CICS PA dialog. Select the **Transaction Tracking List** report in the **Performance Reports** category.

In batch, the `TRACKINGLIST` command is used to request the Transaction Tracking List report.

The command to produce the default report is:

```
CICSPA TRACKINGLIST
```

To tailor the report, you can specify report options as follows:

```
CICSPA TRACKINGLIST(
              [OUTPUT(ddname),]
              [EXTERNAL(ddname),]
              [OFIELDS(field1[(options)],...),]
              [GFIELDS(field1[(options)],...),]
              [PRINTMULTIPLE|NOPRINTMULTIPLE,]
              [PRINTSINGLE|NOPRINTSINGLE,]
              [LINECount(nnn),]
              [SELECT(PERFORMANCE(INCLUDE|EXCLUDE(field1(values1),...),...)),]
              [SELGRP(PERFORMANCE(INCLUDE|EXCLUDE(field1(values1),...),...)),]
              [TITLE1('...up to 64 characters...'),]
              [TITLE2('...up to 64 characters...'),])
```

The CICS PA dialog generates the OFIELDS and GFIELDS operands when a corresponding Report Form is specified.

The OFIELDS operand controls the format of the origin section of the report by specifying the desired fields and the order of the columns. If the OFIELDS operand is not specified, the default is:

```
CICSPA TRACKINGLIST(OFIELDS(OTRAN,    Originating Transaction ID
                   OUSERID,          Originating User ID
                   OAPPLID,          Originating CICS Application ID
                   OTASKNO,          Originating Transaction number
                   OSTART(TIMET),    Originating Task Start time
                   OORIGIN,          Originating Transaction Origin type
                   OFCTY,            Originating Transaction Facility name
                   OTCPSRVC,         Originating TCP/IP Service name
                   OCLI6ADR,         Originating Client or Telnet IP address
                   OCLIPORT))        Originating Client IP port number
```

The GFIELDS operand controls the format of the group section of the report by specifying the desired fields and the order of the columns. If the GFIELDS operand is not specified, the default is:

```
CICSPA TRACKINGLIST(GFIELDS(TRAN,     Transaction ID
                    USERID,           User ID
                    APPLID,           CICS Application ID
                    TASKNO,           Transaction number
                    START(TIMET),     Task Start time
                    RTYPE,            Record type
                    ORIGIN,           Transaction origin
                    RESPONSE,         Response time
                    CPU,              User CPU
                    PHTRAN,           Previous Hop transaction ID
                    PHTASKNO,         Previous Hop task number
                    PHAPPLID,         Previous Hop application ID
                    PHSTART,          Previous Hop start time
                    PHCOUNT))         Previous Hop count
```

Report content

The Transaction Tracking List report has two parts:

1. **Origin section.** A report line is printed for each originating transaction record in the input file.
2. **Group section.** Each originating transaction is followed by a Group section which displays a list of all transactions that are subordinate to it. The Group section is sorted in ascending order of the fields OSTART + TRNGRPID + START. This combination ensures that the transactions are grouped and sorted in succession order. The first entry in the Group section is usually the Originating transaction, which can be identified by PHCOUNT=0.

The following report is an example of the Transaction Tracking List report.

```
 V3R2M0                                          CICS Performance Analyzer
                                                 Transaction Tracking List

TTLS0001 Printed at 12:03:45  3/15/2011    Data from 17:07:03  3/07/2011                                          Page   9

OTran OUserid  OAPPLID   OTaskNo OStart       OOrigin  OFcty    OTCPIPSr OCli6Adr                                OCLIPORT
                                 Time
PS3   JOHNB    IYCUZC03      418 16:25:34.939 TERM     2318                                                            0

Tran Userid   APPLID     TaskNo Start        RTyp Origin   Response User CPU PHTran PHTaskNo PHAPPLID PHStart      PHCount  PHLatncy
                                 Time                            Time     Time                         Time                     Time
PS3  JOHNB    IYCUZC03      418 16:25:34.939    T TERM        .0048    .0001               0                              0    .0000
PS3  JOHNB    IYCUZC01    97486 16:25:34.941    T MRO         .0029    .0007 PS3         418 IYCUZC03 16:25:34.939        1    .0019
CSMI JOHNB    IYCUZC07     2966 16:25:34.941    T MRO         .0027    .0004 PS3       97486 IYCUZC01 16:25:34.941        2    .0001
-------------------------------------------------------------------------------------------------------------------------------------

OTran OUserid  OAPPLID   OTaskNo OStart       OOrigin  OFcty    OTCPIPSr OCli6Adr                                OCLIPORT
                                 Time
PX3   JOHNB    IYCUZC03      419 16:25:34.939 TERM     2930                                                            0

Tran Userid   APPLID     TaskNo Start        RTyp Origin   Response User CPU PHTran PHTaskNo PHAPPLID PHStart      PHCount  PHLatncy
                                 Time                            Time     Time                         Time                     Time
PX3  JOHNB    IYCUZC03      419 16:25:34.939    T TERM        .0052    .0001               0                              0    .0000
PX3  JOHNB    IYCUZC01    97487 16:25:34.941    T MRO         .0032    .0008 PX3         419 IYCUZC03 16:25:34.939        1    .0019
CSMI JOHNB    IYCUZC07     2967 16:25:34.941    T MRO         .0028    .0004 PX3       97487 IYCUZC01 16:25:34.941        2    .0003
-------------------------------------------------------------------------------------------------------------------------------------

OTran OUserid  OAPPLID   OTaskNo OStart       OOrigin  OFcty    OTCPIPSr OCli6Adr                                OCLIPORT
                                 Time
HR2   JOHNB    IYCUZC04    99073 16:25:34.949 TERM     1865                                                            0

Tran Userid   APPLID     TaskNo Start        RTyp Origin   Response User CPU PHTran PHTaskNo PHAPPLID PHStart      PHCount  PHLatncy
                                 Time                            Time     Time                         Time                     Time
CSMI JOHNB    IYCUZC07     2969 16:25:34.950    T MRO         .0104    .0002 HR2       96253 IYCUZC02 16:25:34.950        2    .0003
-------------------------------------------------------------------------------------------------------------------------------------

OTran OUserid  OAPPLID   OTaskNo OStart       OOrigin  OFcty    OTCPIPSr OCli6Adr                                OCLIPORT
                                 Time
PA2   JOHNB    IYCUZC03      420 16:25:34.949 TERM     2646                                                            0

Tran Userid   APPLID     TaskNo Start        RTyp Origin   Response User CPU PHTran PHTaskNo PHAPPLID PHStart      PHCount  PHLatncy
                                 Time                            Time     Time                         Time                     Time
PA2  JOHNB    IYCUZC03      420 16:25:34.949    T TERM        .0019    .0001               0                              0    .0000
PA2  JOHNB    IYCUZC01    97488 16:25:34.950    T MRO         .0010    .0002 PA2         420 IYCUZC03 16:25:34.949        1    .0008
-------------------------------------------------------------------------------------------------------------------------------------
```

Figure 46. Transaction Tracking List report

For the complete list of performance class data fields that can be selected for the Transaction Tracking List report, see the *CICS Performance Analyzer for z/OS User's Guide.*

A brief description of the fields in the default report follows. For more details, see "CMF performance class data fields" on page 263.

Origin section:

OTran
The transaction ID of the originating task (owner: DFHCICS, field ID: 363).

OUserid
The user identifier of the originating task (owner: DFHCICS, field ID: 364).

OAPPLID
The APPLID of the CICS region in which the originating task ran (owner: DFHCICS, field ID: 360). This field indicates the CICS system that performed the work recorded in the record.

OTaskNo
The number of the originating task (field: OTRANNUM, owner: DFHCICS, field ID: 362).

OStart Time
The time at which the originating task was started. (field: OSTART, owner: DFHCICS, field ID: 361).

OOrigin
This field is an interpretation of the transaction origin type from byte 4 of the transaction flags field (field: OTRANFLAG, owner: DFHCICS, field ID: 370) and can be used as an indicator of the source of the originating transaction. This field can have one of the following values:

Origin Type	Description
NONE	None
TERMINAL	Terminal
TDQUEUE	Terminal data queue
START	Start
TERM START	Terminal start
SCHEDULE	CICS BTS scheduler (CSHQ)
XM RUN	XM run transaction
BRIDGE	Bridge
SOCKET	Socket
WEB	Web
IIOP	IIOP
RRS	RRS
LU6.1 SESS	LU 6.1 session
LU6.2 SESS	LU 6.2 session
MRO SESS	MRO session
ECI SESS	ECI session
IIRQ RECVR	II Request Receiver
RZ ST TRPT	Request stream in-storage transport
IPIC SESS	IP interconnectivity session
EVENT	Event

The ***Origin Type*** is an interpretation of the primary transaction client type with which the transaction was attached using the CICS Transaction Manager.

OFcty
The facility name of the originating transaction (field: OFCTYNME, owner: DFHCICS, field ID: 371). If the originating transaction is not associated with a facility, this field is null.

OTCPIPSr
The name of the originating TCPIPSERVICE (field: OTCPSVCE, owner: DFHCICS, field ID: 366).

OCli6Adr
The IP address of the originating client or Telnet client (field: OCLIPADR, owner: DFHCICS, field ID: 372).

OCLIPORT
The TCP/IP port number of the originating client or Telnet client (owner: DFHCICS, field ID: 369).

Group section:

Tran
The Transaction ID (owner: DFHTASK, field ID: 001) identifies the name of the transaction that this performance class record represents.

Userid
User identification at task attach (owner: DFHCICS, field ID: 089).

APPLID
The APPLID of the CICS system upon which the CMF performance record was created. This field indicates the CICS system that performed the work recorded in the record.

TaskNo
The identification number of the transaction (field: TRANNUM, owner: DFHTASK, field ID: 031).

Start Time
The time at which the task was started (field: START, owner: DFHCICS, field ID: 005).

RTyp
This field describes the type of request that the performance record represents (field: RTYPE, owner: DFHCICS, field ID: 112):

Description

AP: An application program request. The **Program** field will identify the initial application program name invoked for the transaction.

Note: Function shipped Distributed Program Link (DPL) requests are interpreted as application requests. In this case the **AP:** is followed by the **----** (as for other function shipping requests) to indicate the types of requests issued by the application program.

FS:---- A function shipping request. The **----** indicate the types of function shipping request:
F File Control
I Interval Control
D Transient Data
S Temporary Storage

TR:xxxx
A transaction routing request from a terminal-owning region. The 'xxxx' is the transaction routing sysid (field: RSYSID, owner: DFHCICS, field ID: 130) and identifies the connection name (sysid) of the remote system to which the transaction was routed.

Origin
This field is an interpretation of the transaction origin type from byte 4 of the transaction flags field (field: TRANFLAG, owner: DFHTASK, field ID: 164) and can be used as an indicator of the source of the transaction. This field can have one of the following: values:

Origin Type	Description
NONE	None
TERMINAL	Terminal
TDQUEUE	Terminal data queue
START	Start

Origin Type	Description
TERM START	Terminal start
SCHEDULE	CICS BTS scheduler (CSHQ)
XM RUN	XM run transaction
BRIDGE	Bridge
SOCKET	Socket
WEB	Web
IIOP	IIOP
RRS	RRS
LU6.1 SESS	LU 6.1 session
LU6.2 SESS	LU 6.2 session
MRO SESS	MRO session
ECI SESS	ECI session
IIRQ RECVR	II Request Receiver
RZ ST TRPT	Request stream in-storage transport
IPIC SESS	IP interconnectivity session
EVENT	Event

The ***Origin Type*** is an interpretation of the primary transaction client type with which the transaction was attached using the CICS Transaction Manager.

Response Time
The transaction response time. This field is calculated by subtracting the transaction start time (owner: DFHCICS, field ID: 005) from the transaction stop time (owner: DFHCICS, field ID: 006).

User CPU
The transaction CPU time (field: USRCPUT, owner: DFHTASK, field ID: 008).

PHTran
The transaction ID of the immediately previous task in another CICS system with which this task is associated (owner: DFHCICS, field ID: 377).

PHTaskNo
The task number of the immediately previous task in another CICS system with which this task is associated (field: PHTRANNO, owner: DFHCICS, field ID: 376).

PHAPPLID
The APPLID of the CICS system of an immediately previous task in another CICS region with which this task is associated (owner: DFHCICS, field ID: 374).

PHStart Time
The start time of the immediately previous task in another CICS system with which this task is associated (field: PHSTART, owner: DFHCICS, field ID: 375).

PHCount
The number of times there has been a request from one CICS system to another CICS system to initiate a task with which this task is associated (owner: DFHCICS, field ID: 378).

PHLatncy Time
Previous hop latency time for the transaction. This field is calculated by

subtracting the transaction start time of the previous hop transaction (field: PHSTART, owner: DFHCICS, field ID: 375) from the Start time of the current transaction (field: START, owner: DFHCICS, field ID: 005).

Transaction Tracking Summary report

The Transaction Tracking Summary report provides performance data for groups of related transactions. The report combines CMF records for each originating transaction and its subordinate (group) transactions. Group transactions are identified by sharing the same transaction group ID with other transactions or by having a PHCOUNT > 0. The summarized data is presented on a single line for each transaction group.

You can request a report from all available records, or you can specify selection criteria to request a report from only the records that meet specific requirements. The SELECT and SELGRP commands enable both preprocessing of individual records and postprocessing of transaction groups and their originating transaction.

Report command

The Transaction Tracking Summary report can be requested from a Report Set in the CICS PA dialog. Select the **Transaction Tracking Summary** report in the **Performance Reports** category.

In batch, the `TRACKINGSUMMARY` command is used to request the Transaction Tracking Summary report.

The command to produce the default report is:

```
CICSPA TRACKINGSUMMARY
```

To tailor the report, you can specify report options as follows:

```
CICSPA TRACKINGSUMMARY(
              [OUTPUT(ddname),]
              [EXTERNAL(ddname),]
              [PRINTMULTIPLE|NOPRINTMULTIPLE,]
              [PRINTSINGLE|NOPRINTSINGLE,]
              [LINECount(nnn),]
              [FIELDS(field1[(options)],...),]
              [SELECT(PERFORMANCE(INCLUDE|EXCLUDE(field1(values1),...),...)),]
              [SELGRP(PERFORMANCE(INCLUDE|EXCLUDE(field1(values1),...),...)),]
              [TITLE1('...up to 64 characters...'),]
              [TITLE2('...up to 64 characters...'),])
```

The CICS PA dialog generates the FIELDS operand when a Report Form is specified. This operand controls the format of the report by specifying the desired fields and the order of the columns. If a Report Form is not specified, the default is the tracking key fields:

```
CICSPA TRACKINGSUMMARY(FIELDS(
              PHAPPLID,            Previous Hop application ID
              PHTRAN,              Previous Hop transaction ID
              PHCOUNT,             Previous Hop count
              APPLID,              CICS Application ID
              TRAN))               Transaction ID
```

Report content

The Transaction Tracking Summary report displays a summary of all transactions associated with an originating transaction. The report lists a summary line for each transaction belonging to the transaction group, including the originating transaction. The report content is based on the tracking key plus a user-specified form. If a form is not specified a default form is used.

Grouping of transactions is based on a tracking key. The tracking key comprises three parts:

1. **Fields that identify the originating transaction (OAPPLID or OTRAN or both).**

   You can select APPLID, which specifies the originating CICS APPLID (OAPPLID), or TRAN, which specifies the originating transaction (OTRAN), or both. The default key is APPLID + TRAN.
2. **Fields that identify the 'previous hop' transaction (PHTRAN and PHAPPLID).**

   The previous hop identification fields are automatically paired in the report with the corresponding originating transaction fields. That is, if TRAN is selected then PHTRAN will be included and if APPLID is selected then PHAPPLID will be included. The previous hop ID fields are displayed in the first columns of the report line.
3. **User-specified key fields.** You can select up to four CMF fields, which are used to display the actual summary data for each originating transaction and each related (previous hop) transaction.

All related transactions are grouped using the OTRAN and OAPPLID field values. They are further broken down by PHTRAN and PHAPPLID to get segregation of previous hop transactions within the origin transaction. Finally, the data is summarized and displayed by previous hop ID and the user-specified key.

When a report form is specified for this report, the following rules apply.

1. The key fields in the form are replaced by the tracking key.

   Note: This can result in the report page width different to that calculated for the Form.
2. An error will be generated if PHCOUNT is a field in the Form as it is part of the Tracking key.
3. Fields with function Severity (SEV) are ignored and are not included in the report.

Transactions with PHCOUNT=0 are considered originating transactions and therefore previous hop (PH) data is not displayed for them in the report.

The following report is an example of the Transaction Tracking Summary report.

```
 V3R2M0                                          CICS Performance Analyzer
                                          Performance Transaction Tracking Summary

TTSU0001 Printed at 12:03:45  3/15/2011    Data from 17:07:03  3/07/2011                                                    Page 1

                                                   Avg      Max      Avg      Avg      Avg      Max      Avg      Avg      Avg      Avg      Avg      Avg
PHAPPLID PHTran   PHCount  APPLID   Tran     Hop%   #Tasks Response Response Dispatch User CPU  Suspend  Suspend DispWait  FC Wait   FCAMRq  IR Wait SC24UHWM SC31UHWM
                                                     Time     Time     Time     Time     Time     Time     Time     Time    Count     Time    Count    Count
                        0 IYCUZC03 /FOR            17175    .0016    .0529    .0003    .0001    .0013    .0526    .0002    .0000        0    .0010        0        0
IYCUZC03 /FOR           1 IYCUZC01 /FOR      100   17175    .0004    .0164    .0001    .0001    .0003    .0164    .0000    .0000        0    .0000        0    63280
-------------------------------------------------------------------------------------------------------------------------------------------------------------------------
                        0 IYCUZC03 CSPG             1449    .0007    .0142    .0003    .0001    .0005    .0139    .0002    .0000        0    .0000        0        0
-------------------------------------------------------------------------------------------------------------------------------------------------------------------------
                        0 IYCUZC03 DE1               958    .0136    .0525    .0002    .0001    .0134    .0523    .0002    .0000        0    .0130        0        0
IYCUZC03 DE1            1 IYCUZC01 DE1       100     958    .0123    .0517    .0004    .0003    .0120    .0513    .0002    .0000        0    .0110        0   167440
IYCUZC01 DE1            2 IYCUZC07 CSMI      100     958    .0114    .0504    .0002    .0002    .0113    .0502    .0004    .0008        3    .0010        0       23
IYCUZC03 DE1            1 IYCUZC01 DE20        9      92    .0088    .0284    .0005    .0005    .0083    .0278    .0001    .0000        0    .0070        0   409248
IYCUZC01 DE20           2 IYCUZC07 CSMI        9      92    .0083    .0264    .0002    .0002    .0081    .0262    .0002    .0010       13    .0018        0        0
IYCUZC03 DE1            1 IYCUZC01 DE21       10     104    .0090    .0288    .0005    .0005    .0085    .0282    .0001    .0000        0    .0073        0   409248
IYCUZC01 DE21           2 IYCUZC07 CSMI       10     104    .0085    .0286    .0003    .0002    .0083    .0282    .0003    .0011       13    .0018        0        1
IYCUZC03 DE1            1 IYCUZC01 DE22        9      95    .0077    .0341    .0005    .0005    .0072    .0335    .0001    .0000        0    .0059        0   409248
IYCUZC01 DE22           2 IYCUZC07 CSMI        9      95    .0071    .0329    .0002    .0002    .0069    .0325    .0002    .0009       13    .0017        0        1
IYCUZC03 DE1            1 IYCUZC01 DE23       10     105    .0092    .0464    .0005    .0005    .0087    .0459    .0002    .0000        0    .0070        0   409248
IYCUZC01 DE23           2 IYCUZC07 CSMI       10     105    .0086    .0462    .0003    .0002    .0084    .0459    .0002    .0009       13    .0021        0        0
IYCUZC03 DE1            1 IYCUZC01 DE24        9      89    .0077    .0282    .0005    .0005    .0072    .0276    .0001    .0000        0    .0059        0   409248
IYCUZC01 DE24           2 IYCUZC07 CSMI        9      89    .0073    .0279    .0002    .0002    .0070    .0276    .0002    .0008       13    .0019        0        0
IYCUZC03 DE1            1 IYCUZC01 DE25        9      94    .0098    .0269    .0005    .0005    .0093    .0263    .0002    .0000        0    .0080        0   409248
IYCUZC01 DE25           2 IYCUZC07 CSMI        9      94    .0093    .0266    .0003    .0002    .0090    .0263    .0003    .0012       13    .0018        0        1
IYCUZC03 DE1            1 IYCUZC01 DE26        8      83    .0081    .0307    .0005    .0005    .0076    .0302    .0001    .0000        0    .0065        0   409248
IYCUZC01 DE26           2 IYCUZC07 CSMI        8      83    .0077    .0302    .0002    .0002    .0075    .0299    .0002    .0010       13    .0017        0        0
IYCUZC03 DE1            1 IYCUZC01 DE27       10     103    .0084    .0293    .0005    .0005    .0079    .0288    .0002    .0000        0    .0066        0   409248
IYCUZC01 DE27           2 IYCUZC07 CSMI       10     103    .0079    .0290    .0002    .0002    .0076    .0288    .0002    .0009       13    .0020        0        0
IYCUZC03 DE1            1 IYCUZC01 DE28       10     101    .0082    .0333    .0005    .0005    .0077    .0326    .0001    .0000        0    .0066        0   409248
IYCUZC01 DE28           2 IYCUZC07 CSMI       10     101    .0077    .0324    .0002    .0002    .0075    .0319    .0002    .0008       13    .0017        0        1
IYCUZC03 DE1            1 IYCUZC01 DE29        9      93    .0080    .0296    .0005    .0005    .0075    .0291    .0001    .0000        0    .0064        0   409248
IYCUZC01 DE29           2 IYCUZC07 CSMI        9      93    .0076    .0292    .0002    .0002    .0073    .0289    .0002    .0009       13    .0017        0        0
-------------------------------------------------------------------------------------------------------------------------------------------------------------------------
                        0 IYCUZC03 HR2               357    .0071    .0234    .0002    .0001    .0068    .0229    .0002    .0000        0    .0066        0        0
IYCUZC03 HR2            1 IYCUZC01 HR2       100     357    .0061    .0224    .0003    .0003    .0057    .0221    .0001    .0000        0    .0056        0   132896
IYCUZC01 HR2            2 IYCUZC07 CSMI      100     357    .0054    .0211    .0001    .0001    .0052    .0210    .0002    .0005        4    .0003        0        4
-------------------------------------------------------------------------------------------------------------------------------------------------------------------------
```

Figure 47. Transaction Tracking Summary report

For the complete list of performance class data fields that can be selected for the Transaction Tracking Summary report, see the *CICS Performance Analyzer for z/OS User's Guide.*

A brief description of the fields in the default report follows. For more details, see "CMF performance class data fields" on page 263.

PHAPPLID
The APPLID of the CICS system of an immediately previous task in another CICS region with which this task is associated (owner: DFHCICS, field ID: 374). Note that this field is not printed for the originating transaction (PHCOUNT=0).

PHTran
The transaction ID (TRANSID) of the immediately previous task in another CICS system with which this task is associated (owner: DFHCICS, field ID: 377). Note that this field is not printed for the originating transaction (PHCOUNT=0).

PHCount
The number of times there has been a request from one CICS system to another CICS system to initiate a task with which this task is associated (owner: DFHCICS, field ID: 378). This shows the actual hop position of each transaction or APPLID in the group.

APPLID
The APPLID of the CICS system upon which the CMF performance record was created. This field indicates the CICS system that performed the work recorded in the record.

Tran
The Transaction ID (field: TRAN, owner: DFHTASK, field ID: 001) identifies the name of the transaction that this performance class record represents.

Hop%
The percentage of times this transaction was executed relative to the total number of times the originating transaction was executed in this transaction group.

Tasks
The number of times this transaction was executed in this transaction group.

Avg Response Time
The average response time.

Max Response Time
The maximum response time.

Avg Dispatch Time
The average dispatch time.

Avg User CPU Time
The average CPU time.

Avg Suspend Time
The average suspend time.

Max Suspend Time
The maximum suspend time.

Avg DispWait Time
The average dispatch wait time.

Avg FC Wait Time
The average file control I/O wait time.

Avg FCAMRq Count
The average number of access method calls.

Avg IR Wait Time
The average inter-region (MRO) I/O wait time.

Avg SC24UHWM
The average storage high-water mark below 16MB.

Avg SC31UHWM
The average storage high-water mark above 16MB.

Chapter 3. Exception reports

The Exception reports are produced from CMF exception class data.

Exception class monitoring data is information on CICS resource shortages that are suffered by a transaction. This data highlights possible problems in CICS system operation and is intended to help you identify system constraints that affect the performance of your transactions. There is one exception record for each type of exception condition. The exception records are produced and written to SMF as soon as the resource constraint encountered by the transaction has been resolved.

The reports in this category are:
- "Exception List report"
- "Exception Summary report" on page 111

Exception List report

The Exception List report provides two types of information:
- The cause of the exception condition
- The information necessary to relate this record to the performance class record on the Performance List report.

You can request a report that uses all the exception records, or you can provide criteria to select only the records that meet specific requirements.

Report command

The Exception List report can be requested from a Report Set in the CICS PA dialog. Select the **List** report in the **Exception Reports** category.

In batch, the `LISTEXCeption` command is used to request the Exception List report.

The command to produce the default report is:

```
CICSPA LISTEXCEPTION
```

To tailor the report, you can specify report options as follows:

```
CICSPA LISTEXC(
          [OUTPUT(ddname),]
          [LINECOUNT(nnn),]
          [TITLE1('...sub-heading left ...'),]
          [TITLE2('...sub-heading right...'),]
          [SELECT(EXCEPTION(INCLUDE|EXCLUDE(field1(values1),...),
                                  ...))])
```

Report content

In this report, one line is printed for every exception record written by the CICS Monitoring Facility (CMF). Selected data within the exception record is displayed on this line. The reported information allows you to find the corresponding records in the Performance List report.

```
 V3R2M0                                          CICS Performance Analyzer
                                                      Exception List

XLST0001 Printed at 12:03:45  3/15/2011     Data from 08:08:37  2/16/2010                       APPLID

                                Tran     Service  Report          Exp ..... Time ..... Current  Resource                  Exception
Tran Term LUName   Userid   SC Class    Class    Class     Taskno Seq Start    Elapsed Program    Type   Resource ID      Type

ABRW P045 IG2ZP045 CBAKER   TP                                 834   1 08:08:37  10.189 DFHSABRW FILE     FILEA            STRING
ABRW S205 IGCS205  BRENNER  TP                                 835   1 08:08:47   7.245 DFHSABRW FILE     FILEA            STRING
ABRW S220 IGCS220  BRENNER  TP                                 837   1 08:08:52   2.996 DFHSABRW FILE     FILEA            STRING
CECI S220 IGCS220  BRENNER  TO                                1151   1 08:12:10    .005 DFHECID  TEMPSTOR CACA             BUFFER
CECI S220 IGCS220  BRENNER  TO                                1151   2 08:12:10    .002 DFHECID  TEMPSTOR CACA             BUFFER
CECI S220 IGCS220  BRENNER  TO                                1151   3 08:12:10    .002 DFHECID  TEMPSTOR CACA             BUFFER
CECI P045 IG2ZP045 CBAKER   TO                                1149   1 08:12:10    .004 DFHECID  TEMPSTOR LONGTSNAME        BUFFER
CECI P045 IG2ZP045 CBAKER   TO                                1149   2 08:12:10    .004 DFHECID  TEMPSTOR LONGTSNAME        BUFFER
CECI P045 IG2ZP045 CBAKER   TO                                1149   3 08:12:10    .002 DFHECID  TEMPSTOR LONGTSNAME        BUFFER
CECI P045 IG2ZP045 CBAKER   TO                                1149   4 08:12:10    .004 DFHECID  TEMPSTOR LONGTSNAME        BUFFER
CECI P045 IG2ZP045 CBAKER   TO                                1149   5 08:12:10    .004 DFHECID  TEMPSTOR LONGTSNAME        BUFFER
CECI P045 IG2ZP045 CBAKER   TO                                1149   6 08:12:10    .004 DFHECID  TEMPSTOR LONGTSNAME        BUFFER
CECI P045 IG2ZP045 CBAKER   TO                                1149   7 08:12:10    .002 DFHECID  TEMPSTOR LONGTSNAME        BUFFER
CECI P045 IG2ZP045 CBAKER   TO                                1149   8 08:12:10    .003 DFHECID  TEMPSTOR LONGTSNAME        BUFFER
CECI P045 IG2ZP045 CBAKER   TO                                1149   9 08:12:10    .003 DFHECID  TEMPSTOR LONGTSNAME        BUFFER
CECI P045 IG2ZP045 CBAKER   TO                                1149  10 08:12:11    .002 DFHECID  TEMPSTOR LONGTSNAME        BUFFER
CECI P045 IG2ZP045 CBAKER   TO                                1149  11 08:12:11    .002 DFHECID  TEMPSTOR LONGTSNAME        BUFFER
CECI P045 IG2ZP045 CBAKER   TO                                1149  12 08:12:11    .004 DFHECID  TEMPSTOR LONGTSNAME        BUFFER
CECI P045 IG2ZP045 CBAKER   TO                                1149  13 08:12:11    .002 DFHECID  TEMPSTOR LONGTSNAME        BUFFER
CECI P045 IG2ZP045 CBAKER   TO                                1149  14 08:12:11    .002 DFHECID  TEMPSTOR LONGTSNAME        BUFFER
CECI P045 IG2ZP045 CBAKER   TO                                1149  15 08:12:11    .002 DFHECID  TEMPSTOR LONGTSNAME        BUFFER
CECI P045 IG2ZP045 CBAKER   TO                                1149  16 08:12:11    .002 DFHECID  TEMPSTOR LONGTSNAME        BUFFER
CECI P045 IG2ZP045 CBAKER   TO                                1149  17 08:12:11    .002 DFHECID  TEMPSTOR LONGTSNAME        BUFFER
CECI P045 IG2ZP045 CBAKER   TO                                1149  18 08:12:11    .004 DFHECID  TEMPSTOR LONGTSNAME        BUFFER
CECI S220 IGCS220  BRENNER  TO                                1151   4 08:12:11    .002 DFHECID  TEMPSTOR CACA             BUFFER
CECI S220 IGCS220  BRENNER  TO                                1151   5 08:12:11    .002 DFHECID  TEMPSTOR CACA             BUFFER
CECI S220 IGCS220  BRENNER  TO                                1151   6 08:12:11    .003 DFHECID  TEMPSTOR CACA             BUFFER
CECI S220 IGCS220  BRENNER  TO                                1151   7 08:12:11    .003 DFHECID  TEMPSTOR CACA             BUFFER
CECI S220 IGCS220  BRENNER  TO                                1151   8 08:12:11    .002 DFHECID  TEMPSTOR CACA             BUFFER
CECI S220 IGCS220  BRENNER  TO                                1151   9 08:12:11    .003 DFHECID  TEMPSTOR CACA             BUFFER
CECI S220 IGCS220  BRENNER  TO                                1151  10 08:12:11    .003 DFHECID  TEMPSTOR CACA             BUFFER
CECI S220 IGCS220  BRENNER  TO                                1151  11 08:12:11    .003 DFHECID  TEMPSTOR CACA             BUFFER
CECI S220 IGCS220  BRENNER  TO                                1151  12 08:12:12    .004 DFHECID  TEMPSTOR CACA             BUFFER
CECI S220 IGCS220  BRENNER  TO                                1151  13 08:12:12    .003 DFHECID  TEMPSTOR CACA             BUFFER
CECI S220 IGCS220  BRENNER  TO                                1151  14 08:12:12    .004 DFHECID  TEMPSTOR CACA             BUFFER
CECI S205 IGCS205  BRENNER  TO                                1150   1 08:12:12    .002 DFHECID  TEMPSTOR FRED             BUFFER
CECI S220 IGCS220  BRENNER  TO                                1151  15 08:12:12    .004 DFHECID  TEMPSTOR CACA             BUFFER
CECI S205 IGCS205  BRENNER  TO                                1150   2 08:12:12    .004 DFHECID  TEMPSTOR FRED             BUFFER
CECI S220 IGCS220  BRENNER  TO                                1151  16 08:12:12    .004 DFHECID  TEMPSTOR CACA             BUFFER
CECI S205 IGCS205  BRENNER  TO                                1150   3 08:12:12    .004 DFHECID  TEMPSTOR FRED             BUFFER
CECI S220 IGCS220  BRENNER  TO                                1151  17 08:12:12    .004 DFHECID  TEMPSTOR CACA             BUFFER
CECI S205 IGCS205  BRENNER  TO                                1150   4 08:12:12    .004 DFHECID  TEMPSTOR FRED             BUFFER
CECI S220 IGCS220  BRENNER  TO                                1151  18 08:12:12    .005 DFHECID  TEMPSTOR CACA             BUFFER
CECI S205 IGCS205  BRENNER  TO                                1150   5 08:12:12    .006 DFHECID  TEMPSTOR FRED             BUFFER
CECI S205 IGCS205  BRENNER  TO                                1150   6 08:12:12    .002 DFHECID  TEMPSTOR FRED             BUFFER
CECI S205 IGCS205  BRENNER  TO                                1150   7 08:12:12    .002 DFHECID  TEMPSTOR FRED             BUFFER
CECI S205 IGCS205  BRENNER  TO                                1150   8 08:12:12    .002 DFHECID  TEMPSTOR FRED             BUFFER
CECI S205 IGCS205  BRENNER  TO                                1150   9 08:12:12    .002 DFHECID  TEMPSTOR FRED             BUFFER
CECI S205 IGCS205  BRENNER  TO                                1150  10 08:12:12    .002 DFHECID  TEMPSTOR FRED             BUFFER
CECI S205 IGCS205  BRENNER  TO                                1150  11 08:12:12    .002 DFHECID  TEMPSTOR FRED             BUFFER
```

Figure 48. Exception List report

The leftmost columns in this report contain similar information as reported in the Performance List report to identify the exception transaction. The rightmost columns provide additional information about the actual exception.

For detailed information on the exception class data fields shown in the Exception List report, see "CMF exception class data fields" on page 328.

The following columns are the same as the Performance List report:

Tran

The Transaction ID (field: TRAN, owner: DFHTASK, field ID: 001) identifies the name of the transaction that this performance class record represents. Applications that are using Distributed Program Link (DPL) requests should use the TRANSID('xxxx') parameter on the EXEC CICS LINK PROGRAM('xxxxxxxx') command to enable better transaction/application analysis from the monitoring performance class data. If the TRANSID('xxxx') parameter is not specified all the performance class records on the target system for a Distributed Program Link (DPL) mirror transaction will have the same transaction ID. For example, 'CSMI' for a Distributed Program Link (DPL) request from another connected CICS system.

Term
The Terminal ID (field: TERM, owner: DFHTERM, field ID: 002) is either the terminal ID or the session ID. This field is blank if the transaction was not associated with a terminal or session facility.

LUName
The LUname (field: LUNAME, owner: DFHTERM, field ID: 111) is either the VTAM netname of the terminal ID (if the Access Method for the terminal is VTAM) or the VTAM APPLID of the connection for the session ID. For an EXCI connection, this field is blank. The transaction's terminal or session type can be identified from the NATURE field (byte 0) within the terminal information field (field: TERMINFO, owner: DFHTERM, field ID: 165). This field is blank if the transaction was not associated with a terminal or session facility.

Userid
The User identifier of the transaction (owner: DFHCICS, field ID: 089).

SC The transaction start type (field: STYPE, owner: DFHTASK, field ID: 004).

Tran Class
The transaction class for this transaction (owner: DFHTASK, field ID: 166). If the transaction is not in a transaction class then this field is blank.

Service Class
The MVS Workload Manager (WLM) service class (owner: DFHCICS, field ID: 167) for the transaction (CICS Transaction Server Version 1.1 or later only).

Report Class
The MVS Workload Manager (WLM) report class (owner: DFHCICS, field ID: 168) for the transaction (CICS Transaction Server Version 1.1 or later only).

Taskno
The transaction identification number (owner: DFHTASK, field ID: 031).

Exp Seq
The sequence number of this exception within the transaction.

Start
The Start time of the exception condition.

Elapsed
The Elapsed time of the exception condition.

The following columns provide additional information about the exception:

Resource Type
The exception resource type:

CFDTLRSW
The exception resource ID is a CFDTPOOL name.

CFDTPOOL
The exception resource ID is a CFDTPOOL name.

FILE The exception resource ID is a file name.

LSRPOOL
The exception resource ID is an LSRPOOL ID.

STORAGE
The exception resource ID is CICS storage.

TEMPSTOR
The exception resource ID is temporary storage queue name.

Resource ID
The exception resource ID.

Exception Type
The exception type:

WAIT Exception is due to a wait.

BUFFER
Exception is due to a buffer wait.

STRING
Exception is due to a string wait.

Table 5 shows the exception types and the corresponding resource type and resource ID values along with a brief description of the exception condition.

Table 5. Exception types

Exception Type	Resource Type	Resource ID	Meaning
WAIT	CFDTLRSW	CFDTPOOL name	Wait for CF (coupling facility) data table locking request slot
WAIT	CFDTPOOL	CFDTPOOL name	Wait for CF (coupling facility) data table non-locking request slot
WAIT	STORAGE	CDSA	Wait for CDSA storage
WAIT	STORAGE	ECDSA	Wait for ECDSA storage
WAIT	STORAGE	GCDSA	Wait for GCDSA storage
WAIT	STORAGE	UDSA	Wait for UDSA storage
WAIT	STORAGE	EUDSA	Wait for EUDSA storage
WAIT	STORAGE	SDSA	Wait for SDSA storage
WAIT	STORAGE	ESDSA	Wait for ESDSA storage
WAIT	TEMPSTOR	TS Qname	Wait for temporary storage
STRING	FILE	filename	Wait for VSAM string associated with a file
STRING	LSRPOOL	filename	Wait for VSAM string associated with an LSRPOOL
STRING	TEMPSTOR	TS Qname	Wait for VSAM string associated with DFHTEMP
BUFFER	LSRPOOL	LSRPOOL	Wait for VSAM buffer associated with an LSRPOOL
BUFFER	TEMPSTOR	TS Qname	Wait for VSAM buffer associated with DFHTEMP

To obtain the number of exception records written for each transaction, look at the Count component of the exception wait time (field: EXWTTIME, owner: DFHCICS, field ID: 103) on the Performance List report or Performance List Extended report. Note that this field is not in the default reports. You'll need to request the **EXWAIT** field in a Report Form or FIELDS operand.

Exception Summary report

The Exception Summary report summarizes the exception records collected by the CICS Monitoring Facility (CMF). Records are summarized by transaction identifier code. The report provides the total number of exceptions for each transaction, according to the following:

- For auxiliary temporary storage VSAM buffer and string wait conditions
- For coupling facility data table pool wait conditions
- For VSAM LSRPOOL buffer and string wait conditions
- For VSAM file string wait conditions
- For temporary storage wait conditions
- For main storage wait conditions

You can request a report that summarizes all available records, or you can provide selection criteria to summarize only the data that meets specific requirements.

Report command

The Exception Summary report can be requested from a Report Set in the CICS PA dialog. Select the **Summary** report in the **Exception Reports** category.

In batch, the `SUMEXCeption` command is used to request the Exception List report.

The command to produce the default report is:

```
CICSPA SUMEXCEPTION
```

To tailor the report, you can specify report options as follows:

```
CICSPA SUMEXC(
         [OUTPUT(ddname),]
         [LINECOUNT(nnn),]
         [TITLE1('...sub-heading left ...'),]
         [TITLE2('...sub-heading right...'),]
         [SELECT(EXCEPTION(INCLUDE|EXCLUDE(field1(values1),...),
                                  ...))])
```

Report content

Each line on the report represents the summarized information for a single Transaction ID, and is printed in alphanumeric order by Transaction ID.

```
 V3R2M0                                                CICS Performance Analyzer
                                                           Exception Summary

XSUM0001 Printed at 12:03:45  3/15/2011     Data from 08:08:37  2/16/2010 to 08:12:36  2/16/2010

Tran   Total    TS-Buffer-Wait   TS-String-Wait  Pool-Buffr-Wait  Pool-Strng-Wait  File-Strng-Wait  ..Temp Storage.  ..Main Storage.
 ID   Excepts  Average   Count  Average   Count  Average   Count  Average   Count  Average   Count  Average   Count  Average   Count

ABRW        3                                                                                  6.810       3
CEBR       16                       .003      16
CECI      257     .006     256     .003       1
      -------  ------- -------  ------- -------  ------- -------  ------- -------  ------- -------  ------- -------  ------- -------
TOTAL     276     .006     256     .003      17                                          6.810       3
```

Figure 49. Exception Summary report

For detailed information on the exception class data fields shown in the Exception Summary report, see “CMF exception class data fields” on page 328.

The Exception Summary report contains the following information:

Tran
The Transaction ID.

Total Excepts
The total number of exceptions for the transaction.

The average elapsed time **(Average)** and number of exceptions **(Count)** for the following exception resource types:

TS-Buffer-Wait
Waits for an auxiliary temporary storage VSAM buffer.

TS-String-Wait
Waits for an auxiliary temporary storage VSAM string.

Pool-Buffr-Wait
Waits for a VSAM LSRPOOL buffer.

Pool-Strng-Wait
Waits for a VSAM LSRPOOL string.

File Strng-Waits
Waits for a VSAM file string.

Temp Storage
Waits for auxiliary temporary storage (NOSPACE).

Main Storage
Waits for storage from a CICS dynamic storage area (DSA).

Chapter 4. Transaction Resource Usage reports

The Transaction Resource Usage reports are produced from CMF performance class and transaction resource class data. The reports in this category are:

File Usage Summary report

The File Usage Summary report provides a detailed analysis of CMF transaction resource class data for Files.

Two reports can be requested:

1. **Transaction File Usage Summary.** This report summarizes File usage by Transaction ID. For each Transaction ID, it gives Transaction Identification and File Control statistics followed by a breakdown of File usage for each File used by the Transaction.
2. **File Usage Summary.** This report summarizes File activity. For each File, it gives a breakdown of File usage by Transaction ID.

You can request a report that summarizes all available records, or you can provide selection criteria to summarize only the data that meets specific requirements. The selection criteria filters both performance class data and transaction resource class data. However, only some selection criteria fields apply to transaction resource class records. For the selection criteria fields applicable to File Usage processing, see the File Usage Summary report in the *CICS Performance Analyzer for z/OS User's Guide.*

Report command

The File Usage Summary report can be requested from a Report Set in the CICS PA dialog. Select the **File Usage Summary** report in the **Transaction Resource Usage Reports** category.

In batch, the `RESUSAGE` command is used to request the File Usage Summary report.

The command to produce the default report is:

```
CICSPA RESUsage
```

This produces the two File Usage summary reports, the two Temporary Storage Usage summary reports, and the two DPL Usage summary reports. For the File Usage summary reports, this is the same as specifying:

```
CICSPA RESUSAGE(TRANSUMM(FILE),        Transaction File Usage Summary
                FILESUMM(              File Usage Summary
                         BYTRAN,       - break down by Transaction ID
                         TOTAL))       - include transaction totals
```

To tailor the report, you can specify report options as follows:

```
CICSPA RESUSAGE(
          [OUTPUT(ddname),]
          [TRANSUMMARY(FILE),]
```

```
[FILESUMMARY(BYTRAN,TOTAL),]
[LINECOUNT(nnn),]
[TITLE1('...sub-heading left ...'),]
[TITLE2('...sub-heading right...'),]
[SELECT(PERFORMANCE(INCLUDE|EXCLUDE(field1(value1),...),...))])
```

Report content

The File Usage Summary report provides a detailed analysis of CMF transaction resource class data for Files. Reports break down individual File usage by Transaction. You can request one or both of the following:

- "Transaction File Usage Summary report"
- "File Usage Summary report" on page 116

Transaction File Usage Summary report

The Transaction File Usage Summary report provides a summary of File usage by Transaction ID. For each Transaction ID, it gives Transaction Identification and File Control statistics followed by a breakdown of File usage for each File used by the Transaction. See the sample report in Figure 50 created with the command:

```
CICSPA RESUSAGE(TRANSUMM(FILE),OUTPUT(ddname))
```

```
 V3R2M0                                                CICS Performance Analyzer
                                                  Transaction File Usage Summary
FILE0001 Printed at 12:03:45  3/15/2011    Data from 07:30:47  5/29/2010 to 08:35:48  5/29/2010    APPLID CICSPA1     Page   1

                                      ********************** FC Calls ******************** ******** I/O Waits *******  AccMeth
Tran                   #Tasks            Get     Put     Browse    Add    Delete   Total     File      RLS     CFDT   Requests
----                  -------          -------- -------- -------- -------- -------- -------- -------- -------- -------- --------
STOK                        9 Elapse Avg                                                       .2452    .0000    .0000
                                     Max                                                      1.5718    .0000    .0000
                            Count  Avg       48        0      506        2        1      568       65        0        0      595
                                     Max      369        7     4354        9        4     4739      426        0        0     4925

                                      ********************** FC Calls ******************** ******** I/O Waits *******  AccMeth
      File             #Tasks            Get      Put     Browse    Add     Delete   Total     File     RLS      CFDT   Requests
---------------- -------          -------- -------- -------- -------- -------- -------- -------- -------- -------- --------
      STOCKF1             9 Elapse Avg    .1907    .0045    .0170    .0154    .0094    .2544    .2452    .0000    .0000
                                     Max   1.4601    .0110    .1195    .0458    .0358   1.6370   1.5718    .0000    .0000
                            Count  Avg       48        0      506        2        1      568       65        0        0      595
                                     Max      369        2     4354        8        4     4739      426        0        0     4925

      STOCKF2             9 Elapse Avg    .0261    .0054    .0036    .0113    .0068    .0712    .0690    .0000    .0000
                                     Max    .0352    .0065    .0042    .0176    .0098    .1029    .0837    .0000    .0000
                            Count  Avg        0        0       12        0        0       13        1        0        0       34
                                     Max        0        0       15        0        0       17        2        0        0      765
```

Figure 50. Transaction File Usage Summary report

The report consists of two sections:

1. The Identification section that identifies the CICS Transaction ID. This section consists of a summary of performance group DFHFILE fields. Note that data in this section is obtained from CMF performance class records, not transaction resource class records.

   Tran
   The Transaction ID identifies the name of the transaction that this transaction resource class record represents. See the performance class data field TRAN (owner: DFHTASK, field ID: 001).

   #Tasks
   Task count (CMF performance class).

2. The Files section associated with the Transaction ID immediately above it.

   File
   The name of the File used by the Transaction.

#Tasks
Task count (CMF transaction resource class).

The Files section provides **average** and **maximum** values for each of the following fields. For more information on these fields, see "File entry fields" on page 338.

FC Calls
File Control statistics.

Get Elapse
The elapsed time that the user task waited for completion of GET requests issued by the user task for this file.

Get Count
The number of GET requests issued against the file by the user task.

Put Elapse
The elapsed time that the user task waited for completion of PUT requests issued by the user task for this file.

Put Count
The number of PUT requests issued against the file by the user task.

Browse Elapse
The elapsed time that the user task waited for completion of BRO requests issued by the user task for this file.

Browse Count
The number of BRO requests issued against the file by the user task.

Add Elapse
The elapsed time that the user task waited for completion of ADD requests issued by the user task for this file.

Add Count
The number of ADD requests issued against the file by the user task.

Delete Elapse
The elapsed time that the user task waited for completion of DEL requests issued by the user task for this file.

Delete Count
The number of DEL requests issued against the file by the user task.

Total Elapse
The total elapsed time that the user task waited for completion of all requests issued by the user task for this file.

Total Count
The total number of all requests issued against the file by the user task.

I/O Waits

File Elapse
The total I/O wait time on this file by the user task.

File Count
The number of I/O waits on this file by the user task.

RLS Elapse
The elapsed time that the user task waited for RLS file I/O on this file.

RLS Count
The number of times that the user task waited for RLS file I/O on this file.

CFDT Elapse
The elapsed time that the user task waited for a data table access request to the coupling facility data table server to complete for this file.

CFDT Count
The number of times that the user task waited for a data table access request to the coupling facility data table server to complete for this file.

AccMeth Requests Count
The number of times the user task invoked file access-method interfaces.

File Usage Summary report

The File Usage Summary report summarizes File activity. For each File, it gives a breakdown of File usage by Transaction ID. Optionally, the report can include individual transaction statistics or total transaction statistics or both. See the sample report in Figure 51 created with the command:

```
CICSPA RESUSAGE(FILESUMM(BYTRAN,TOTAL),OUTPUT(ddname))
```

```
 V3R2M0                                                CICS Performance Analyzer
                                                          File Usage Summary

FILE0001 Printed at 12:03:45  3/15/2011    Data from 07:30:47  5/29/2010 to 08:35:48  5/29/2010    APPLID CICSPA1       Page     2

                                     ********************** FC Calls ********************** ******** I/O Waits *******  AccMeth
 File            Tran  #Tasks            Get       Put    Browse    Add     Delete   Total     File     RLS      CFDT   Requests
--------         ---- -------           -------- -------- -------- -------- -------- -------- -------- -------- -------- --------
STOCK1           STOK       9 Elapse Avg    .1907    .0045    .0170    .0154    .0094    .2544    .2452    .0000    .0000
                                   Max   1.4601    .0110    .1195    .0458    .0358   1.6370   1.5718    .0000    .0000
                                 Count  Avg       48        0      506        2        1      568       65        0        0      595
                                        Max      369        7     4354        9        4     4739      426        0        0     4925

                 ORDR       4 Elapse Avg    .6174    .0000 10139.51    .0000    .0000 10140.44   1.2854    .0000    .0000
                                   Max    .8421    .0000 40557.78    .0000    .0000 40557.78   1.3365    .0000    .0000
                                 Count  Avg      162        0     3273        0        0     3600      356        0        0     3754
                                        Max      217        0     3273        0        0     3710      356        0        0     3754

                 Totl      13 Elapse Avg    .3220    .0031 3119.862    .0107    .0065 3120.313    .5653    .0000    .0000
                                   Max   2.4697    .0401 40558.06    .1390    .0842 40561.78   5.1415    .0000    .0000
                                 Count  Avg       83        0     1357        1        0     1501      154        0        0     1567
                                        Max      651        7    13092       23       12    14403     1424        0        0    15016
```

Figure 51. File Usage Summary report

The report consists of one section:

1. The File/Transaction ID section which shows for each File, a File usage summary per Transaction.

The File Usage Summary report provides **average** and **maximum** values for each field in the report. For an explanation of these fields, see "Transaction File Usage Summary report" on page 114.

Temporary Storage Usage Summary report

The Temporary Storage Usage Summary report provides a detailed analysis of CMF transaction resource class data for temporary storage queues.

Two reports can be requested:

1. **Transaction Temporary Storage Usage Summary.** This report summarizes Temporary Storage usage by Transaction ID. For each Transaction ID, it gives Transaction Identification and Temporary Storage Control statistics followed by a breakdown of Temporary Storage usage for each Temporary Storage Queue used by the Transaction.
2. **Temporary Storage Usage Summary.** This report summarizes Temporary Storage activity. For each Temporary Storage Queue, it gives a breakdown of Temporary Storage usage by Transaction ID.

You can request a report that summarizes all available records, or you can provide selection criteria to summarize only the data that meets specific requirements. The selection criteria filters both performance class data and transaction resource class data. However, only some selection criteria fields apply to transaction resource class records. For the selection criteria fields applicable to Temporary Storage Usage processing, see the Temporary Storage Usage Summary report in the *CICS Performance Analyzer for z/OS User's Guide.*

Report command

The Temporary Storage Usage Summary report can be requested from a Report Set in the CICS PA dialog. Select the **Temporary Storage Usage Summary** report in the **Transaction Resource Usage Reports** category.

In batch, the `RESUsage` command is used to request the Temporary Storage Usage Summary report.

The command to produce the default report is:

```
CICSPA RESUSAGE
```

This produces the two File Usage summary reports, the two Temporary Storage Usage summary reports, and the two DPL Usage summary reports. For the Temporary Storage Usage summary reports, this is the same as specifying:

```
CICSPA RESUSAGE(TRANSUMM(TEMPSTOR),    Transaction Temporary Storage Usage Summary
                TEMPSTORSUMM(          Temporary Storage Usage Summary
                         BYTRAN,       - break down by Transaction ID
                         TOTAL))       - include transaction totals
```

To tailor the report, you can specify report options as follows:

```
CICSPA RESUSAGE(
          [OUTPUT(ddname),]
          [TRANSUMMARY(TEMPSTOR),]
          [TEMPSTORSUMMARY(BYTRAN,TOTAL),]
          [LINECOUNT(nnn),]
          [TITLE1('...sub-heading left ...'),]
          [TITLE2('...sub-heading right...'),]
          [SELECT(PERFORMANCE(INCLUDE|EXCLUDE(field1(value1),...),...))])
```

Report content

The Temporary Storage Usage Summary report provides a detailed analysis of CMF transaction resource class data for Temporary Storage Queues. Reports break down individual Temporary Storage Queue usage by Transaction. You can request one or both of the following:

- "Transaction Temporary Storage Usage Summary report"
- "Temporary Storage Usage Summary report" on page 120

Transaction Temporary Storage Usage Summary report

The Transaction Temporary Storage Usage Summary report summarizes Transactions that use Temporary Storage queues. The report consists of Transaction Identification and Temporary Storage statistics from the CMF Performance class records. In addition, there is one sub-section for each TSQueue that this Transaction has used from the CMF transaction resource class records.

See the sample report in Figure 52 created with the command:

```
CICSPA RESUSAGE(TRANSUMM(TEMPSTOR),OUTPUT(ddname))
```

```
 V3R2M0                                                CICS Performance Analyzer
                                                 Transaction Temporary Storage Usage Summary

TEMP0001 Printed at 12:03:45  3/15/2011    Data from 07:30:47  5/29/2010 to 08:35:48  5/29/2010    APPLID CICSPA1      Page     1

                                      ************* TS Calls ************* *** I/O Waits ***
Tran                  #Tasks              Get    Put_Aux Put_Main  Total      TS     Shr_TS
----                 -------          --------- -------- -------- -------- -------- --------
CECI                       3 Elapse Avg                                     .0000    .0139
                                 Max                                        .0000    .0139
                            Count  Avg         2        0        6        8        0       10
                                   Max         3        0       12       12        0       17

                                      ************** TS Calls *********** *** I/O Waits ***          ******** TS Item *********
      TSQueue          #Tasks             Get    Put_Aux  Put_Main  Total      TS     Shr_TS            Get    Put_Aux  Put_Main
---------------- -------          -------- -------- -------- -------- -------- --------          -------- -------- --------
     TS_Queue1             2 Elapse Avg    .0104    .0000    .0002    .0106    .0000    .0139
                                 Max    .0104    .0000    .0002    .0104    .0000    .0139
                            Count  Avg        2        0        6        8        0       10                56       44      378
                                   Max        3        0       12       12        0       17  Length       112       88      756

     TS_Queue2             1 Elapse Avg    .0104    .0000    .0002    .0000    .0000    .0139
                                 Max    .0104    .0000    .0002    .0000    .0000    .0139
                            Count  Avg        2        0        6        8        0      104                56       44      378
                                   Max        2        0        6        8        0      104  Length       112       88      756

     Total                 2 Elapse Avg    .0104    .0000    .0002    .0000    .0000    .0139
                                 Max    .0104    .0000    .0002    .0104    .0000    .0139
                            Count  Avg        2        0        6        8        0       10                56       44      378
                                   Max        3        0       12       12        0       17  Length       112       88      756

                                      ************* TS Calls ************* *** I/O Waits ***
Tran                  #Tasks              Get    Put_Aux Put_Main  Total      TS     Shr_TS
----                 -------          --------- -------- -------- -------- -------- --------
CEDA                       9 Elapse Avg                                     .0000    .0139
                                 Max                                        .0000    .0139
                            Count  Avg       48        0      506        2        1      568
                                   Max      369        2     4354        8        4     4739

                                      ************** TS Calls *********** *** I/O Waits ***          ******** TS Item *********
      TSQueue          #Tasks             Get    Put_Aux  Put_Main  Total      TS     Shr_TS            Get    Put_Aux  Put_Main
---------------- -------          -------- -------- -------- -------- -------- --------          -------- -------- --------
     TS_Queue3             9 Elapse Avg    .0104    .0000    .0002    .0106    .0000    .0139
                                 Max    .0104    .0000    .0002    .0104    .0000    .0139
                            Count  Avg        2        0        6        8        0       10                56       44      378
                                   Max        3        0       12       12        0       17  Length       112       88      756
```

Figure 52. Transaction Temporary Storage Usage Summary report

The report consists of two sections:

1. The Identification section that identifies the CICS Transaction ID. This section consists of a summary of performance group DFHTEMP fields. Note that data in this section is obtained from CMF performance class records, not transaction resource class records.

Tran
The Transaction ID identifies the name of the transaction that this transaction resource class record represents. See the performance class data field TRAN (owner: DFHTASK, field ID: 001).

#Tasks
Task count (CMF performance class).

2. The Temporary Storage section associated with the Transaction ID immediately above it.

TSQueue
The name of the Temporary Storage Queue used by the Transaction. If the TSQueue name contains unprintable characters, the hexadecimal representation is reported immediately below the character name.

#Tasks
Task count (CMF transaction resource class).

The Temporary Storage section provides **average** and **maximum** values for each of the following fields. For more information on these fields, see "Temporary storage queue entry fields" on page 339.

TS Calls
Temporary Storage Control statistics.

Get Elapse
The elapsed time that the user task waited for completion of temporary storage GET requests issued by the user task against this temporary storage queue.

Get Count
The number of temporary storage GET requests issued by the user task against this temporary storage queue.

Put_Aux Elapse
The elapsed time that the user task waited for completion of PUT requests to auxiliary temporary storage.

Put_Aux Count
The number of PUT requests to auxiliary temporary storage issued by the user task.

Put_Main Elapse
The elapsed time that the user task waited for completion of PUT requests to main temporary storage.

Put_Main Count
The number of PUT requests to main temporary storage issued by the user task.

Total Elapse
The total elapsed time that the user task waited for completion of all requests issued by the user task against this temporary storage queue.

Total Count
The total number of all requests issued by the user task against this temporary storage queue.

I/O Waits

TS Elapse
The total elapsed time that the user task waited for temporary storage I/O.

TS Count
The number of I/O waits on this temporary storage queue by the user task.

Shr_TS Elapse
The elapsed time that the user task waited for an asynchronous request against this shared temporary storage queue to complete.

Shr_TS Count
The number of times that the user task waited for I/O on this shared temporary storage queue.

TS Item

Get Length
The total length of all items obtained from this temporary storage queue by the user task.

Put_Aux Length
The total length of all items written to the auxiliary temporary storage queue by the user task.

Put_Main Length
The total length of all items written to the main temporary storage queue by the user task.

Temporary Storage Usage Summary report

The Temporary Storage Usage Summary report summarizes Temporary Storage activity, breaking down individual TSQueue usage by Transaction ID. Optionally, you can request to include one or both of the following:

- Break down by Transaction ID to include individual Transaction statistics.
- Transaction Totals to include total Transaction statistics.

See the sample report in Figure 53 created with the command:

```
CICSPA RESUSAGE(TEMPSTORSUMM(BYTRAN,TOTAL),OUTPUT(ddname))
```

```
 V3R2M0                                                CICS Performance Analyzer
                                                   Temporary Storage Usage Summary

TEMP0001 Printed at 12:03:45  3/15/2011    Data from 07:30:47  5/29/2010 to 08:35:48  5/29/2010    APPLID CICSPA1        Page    1

                                        ************* TS Calls ************ *** I/O Waits ***          ******** TS Item *********
 TSQueue         Tran  #Tasks             Get    Put_Aux  Put_Main  Total      TS     Shr_TS             Get   Put_Aux  Put_Main
---------------- ---- -------            -------- -------- -------- -------- -------- --------          -------- -------- --------
TS_QUEUE1        CEDA       9 Elapse Avg    .0104    .0000    .0002    .0106    .0000    .0139
                                  Max    .0104    .0000    .0002    .0104    .0000    .0139
                                Count  Avg       2        0        6        8        0       10               56       44      378
                                       Max       3        0       12       12        0       17  Length      112       88      756

                 CSSY       4 Elapse Avg    .0104    .0000    .0002    .0000    .0000    .0139
                                  Max    .0104    .0000    .0002    .0000    .0000    .0139
                                Count  Avg       2        0        6        8        0       10               56       44      378
                                       Max       3        0       12       12        0       17  Length      112       88      756

                 Totl      13 Elapse Avg    .0104    .0000    .0002    .0000    .0000    .0139
                                  Max    .0104    .0000    .0002    .0000    .0000    .0139
                                Count  Avg       2        0        6        8        0       10               56       44      378
                                       Max       3        0       12       12        0       17  Length      112       88      756
```

Figure 53. Temporary Storage Usage Summary report

The report consists of one section:

1. The TSQueue/Transaction ID section which shows for each temporary storage queue, a temporary storage usage summary per transaction.

The Temporary Storage Usage Summary report provides **average** and **maximum** values for each field in the report. For an explanation of these fields, see

“Transaction Temporary Storage Usage Summary report” on page 118.

Distributed Program Link Usage Summary report

The Distributed Program Link (DPL) Usage Summary report provides a detailed analysis of CMF transaction resource class data for DPLs.

Two reports can be requested:

1. **Transaction DPL Usage Summary.** This report summarizes DPL usage by Transaction ID. For each Transaction ID, it gives Transaction Identification and DPL statistics followed by a breakdown of each DPL used by the Transaction.
2. **DPL Usage Summary.** This report summarizes DPL activity. For each DPL, it gives a breakdown of DPL usage by Transaction ID.

You can request a report that summarizes all available records, or you can provide selection criteria to summarize only the data that meets specific requirements. The selection criteria filters both performance class data and transaction resource class data. However, only some selection criteria fields apply to transaction resource class records. For the selection criteria fields applicable to DPL Usage processing, see the DPL Usage Summary report in the *CICS Performance Analyzer for z/OS User's Guide.*

Report command

The Distributed Program Link (DPL) Usage Summary report can be requested from a Report Set in the CICS PA dialog. Select the **DPL Usage Summary** report in the **Transaction Resource Usage Reports** category.

In batch, the `RESUsage` command is used to request the DPL Usage Summary report.

The command to produce the default report is:

```
CICSPA RESUSAGE
```

This produces the two File Usage summary reports, the two Temporary Storage Usage summary reports, and the two DPL Usage summary reports. For the DPL Usage summary reports, this is the same as specifying:

```
CICSPA RESUSAGE(TRANSUMM(DPL),         Transaction DPL Usage Summary
                DPLSUMM(               DPL Usage Summary
                         BYTRAN,       - break down by Transaction ID
                         TOTAL))       - include transaction totals
```

To tailor the report, you can specify report options as follows:

```
CICSPA RESUSAGE(
          [OUTPUT(ddname),]
          [TRANSUMMARY(DPL),]
          [DPLSUMMARY(BYTRAN,TOTAL),]
          [LINECOUNT(nnn),]
          [TITLE1('...sub-heading left ...'),]
          [TITLE2('...sub-heading right...'),]
          [SELECT(PERFORMANCE(INCLUDE|EXCLUDE(field1(value1),...),...))])
```

Report content

The DPL Usage Summary report provides a detailed analysis of CMF transaction resource class data for DPLs. Reports break down individual DPL usage by Transaction. You can request one or both of the following:

- "Transaction Distributed Program Link Usage Summary report" on page 123
- "Distributed Program Link Usage Summary report" on page 124

Transaction Distributed Program Link Usage Summary report

The Transaction Distributed Program Link (DPL) Usage Summary report summarizes Transactions that use DPLs. The report consists of Transaction Identification and DPL statistics from the CMF Performance class records. In addition, from the CMF transaction resource class records, there is one sub-section for each program used by this Transaction ID that has requested a DPL.

See the sample report in Figure 54 created with the command:

```
CICSPA RESUSAGE(TRANSUMM(DPL),OUTPUT(ddname))
```

```
V3R2M0                                                  CICS Performance Analyzer
                                                      Transaction DPL Usage Summary

DPLS0001 Printed at 12:03:45  3/15/2011    Data from 07:12:47  7/15/2011 to 07:56:49  7/15/2011    APPLID CCVT41M      Page       1


                                        DPL LINK
Tran Program           #Tasks           Requests
---- --------         -------           --------
DIAD DIADPL                29 Count  Avg        8
                                     Max       13

                                        DPL LINK
     Program  SYSID    #Tasks           Requests
     -------- -----   -------           --------
     DIADLET  T41T         12 Count  Avg        1
                                     Max        1

     DIADLET  T41X         17 Count  Avg        1
                                     Max        1

     DIAREAD  T41T          7 Count  Avg        2
                                     Max        4

     DIAREAD  T41X         17 Count  Avg        7
                                     Max        9

     DIATDQ   T41T         29 Count  Avg        1
                                     Max        1

     DIATDQ   T41X         29 Count  Avg        1
                                     Max        1

     DIAWRITE T41T         12 Count  Avg        1
                                     Max        1

     DIAWRITE T41X         17 Count  Avg        1
                                     Max        1

     Total                140 Count  Avg        1
                                     Max        9
```

Figure 54. Transaction DPL Usage Summary report

The report consists of two sections:

1. The Identification section that identifies the CICS Transaction ID. This section consists of a summary of performance group DFHTEMP fields. Note that data in this section is obtained from CMF performance class records, not transaction resource class records.

   Tran
   The Transaction ID identifies the name of the transaction that this transaction resource class record represents. See the performance class data field TRAN (owner: DFHTASK, field ID: 001).

   Program
   The program associated with this Transaction ID.

   #Tasks
   Task count (CMF performance class).

   DPL LINK Requests
   The average and maximum number of DPL requests for this Transaction ID.

2. The DPL section associated with the Transaction ID immediately above it.

   Program
   The name of the specific program that issued the DPL request.

   SYSID
   The ID of the MVS system on which this program ran.

   #Tasks
   Task count (CMF transaction resource class).

   DPL LINK Requests
   The average and maximum number of DPL requests for this program.

Distributed Program Link Usage Summary report

The Distributed Program Link (DPL) Usage Summary report summarizes DPL activity, breaking down individual DPL usage by Transaction ID. Optionally, you can request to include one or both of the following:

- Break down by Transaction ID to include individual Transaction statistics.
- Transaction Totals to include total Transaction statistics.

See the sample report in Figure 55 created with the command:

```
CICSPA RESUSAGE(DPLSUMM(BYTRAN,TOTAL),OUTPUT(ddname))
```

```
V3R2M0                                                  CICS Performance Analyzer
                                                            DPL Usage Summary

DPLS0001 Printed at 12:03:45  3/15/2011    Data from 07:12:47  7/15/2011 to 07:56:49  7/15/2011    APPLID CCVT41M      Page       1


                                          DPL LINK
Program  SYSID   Tran  #Tasks            Requests
-------- -----   ---- -------            --------
DIADLET  T41T    DIAD      12 Count  Avg        1
                                     Max        1

         T41X    DIAD      17 Count  Avg        1
                                     Max        1

                 Totl      29 Count  Avg        1
                                     Max        1

-------- -----   ---- -------            --------
DIAREAD  T41T    DIAD       7 Count  Avg        2
                                     Max        4

         T41X    DIAD      17 Count  Avg        7
                                     Max        9

                 Totl      24 Count  Avg        5
                                     Max        9

-------- -----   ---- -------            --------
DIATDQ   T41T    DIAD      29 Count  Avg        1
                                     Max        1

         T41X    DIAD      29 Count  Avg        1
                                     Max        1

                 Totl      58 Count  Avg        1
                                     Max        1

-------- -----   ---- -------            --------
DIAWRITE T41T    DIAD      12 Count  Avg        1
                                     Max        1

         T41X    DIAD      17 Count  Avg        1
                                     Max        1

                 Totl      29 Count  Avg        1
                                     Max        1
```

Figure 55. DPL Usage Summary report

The report consists of one section:

1. The Program/Transaction ID section which shows for each program, a DPL usage summary per transaction.

Transaction Resource Usage List report

The Transaction Resource Usage List report provides a detailed list of CMF transaction resource class data. The records are reported in the sequence that they appear in the SMF file. The report only processes transaction resource class records, it does not process performance class records. The report can list any combination of File Usage records, Temporary Storage Usage records, and Distributed Program Link (DPL) Usage records.

The report gives Transaction information together with statistics by Transaction of File usage, Temporary Storage usage, or DPL usage.

You can request a report that lists all available records, or you can provide selection criteria to list only the data that meets specific requirements. Only some selection criteria fields apply to transaction resource class records:

- For the selection criteria fields applicable to File Usage processing, see the File Usage Summary report in the *CICS Performance Analyzer for z/OS User's Guide.*
- For the selection criteria fields applicable to Temporary Storage Usage processing, see the Temporary Storage Usage Summary report in the *CICS Performance Analyzer for z/OS User's Guide.*
- For the selection criteria fields applicable to DPL Usage processing, see the DPL Usage Summary report in the *CICS Performance Analyzer for z/OS User's Guide.*

Report command

The Transaction Resource Usage List report can be requested from a Report Set in the CICS PA dialog. Select the **Transaction Resource Usage List** report in the **Transaction Resource Usage Reports** category.

In batch, the `RESUsage(TRANLIST)` command is used to request the Transaction Resource Usage List report.

The command to produce the default report is:

```
CICSPA RESUSAGE(TRANLIST)
```

This produces the Transaction Resource Usage List report for File, Temporary Storage, and Distributed Program Link (DPL) usage, and is the same as specifying:

```
CICSPA RESUSAGE(TRANLIST(           Transaction Resource Usage List
                        FILE,       - include File usage statistics
                        TEMPSTOR,)  - include Temporary Storage usage statistics
                        DPL))       - include DPL usage statistics
```

To tailor the report, you can specify report options as follows:

```
CICSPA RESUSAGE(
          [OUTPUT(ddname),]
          [TRANLIST(FILE,TEMPSTOR,DPL),]
          [LINECOUNT(nnn),]
          [TITLE1('...sub-heading left ...'),]
          [TITLE2('...sub-heading right...'),]
          [SELECT(PERFORMANCE(INCLUDE|EXCLUDE(field1(value1),...),...))])
```

Report content

The Transaction Resource Usage List report provides a detailed list of transaction resource class records showing individual transaction File usage or Temporary Storage usage or both. See the sample report in Figure 56 on page 126 created with the command:

```
CICSPA RESUSAGE(TRANLIST,OUTPUT(ddname))


 V3R2M0                                          CICS Performance Analyzer
                                               Transaction Resource Usage List

RESU0001 Printed at 12:03:45  3/15/2011    Data from 15:05:47  5/15/2011                                          Page       1

                                        Request           Fcty  Conn                                   UOW R Stop /       Response
Tran  Userid  SC TranType Term   LUName   Type   Program  T/Name Name      NETName       APPLID    Task Seq T OStart Time    Time
---- -------- -- -------- ----  -------- ------- -------- ------ ---- ----------------- --------   ---- --- - ------------ --------
CW2A CBAKER   U  U                       AP:     DFHW2FI              GBIBMIYA.IYK2Z1V2 IYK2Z1V2     44   1 T 15:06:26.734    .1473
CWXN CBAKER   -  U        -     -        -       -        B/     -    -                 IYK2Z1V2     43   - - 15:06:26.580    .1541

                                     ********************** FC Calls ********************** ******* I/O Waits ********  AccMeth
      File                             Get      Put     Browse    Add     Delete   Total     File     RLS      CFDT   Requests
     --------                        -------- -------- -------- -------- -------- -------- -------- -------- -------- --------
     FILEA                 Elapse    .0000    .0000    .0001    .0000    .0000    .0153    .0147    .0000    .0000
                           Count        11        0       66        0        0      143        2        0        0      143

                                        Request           Fcty  Conn                                   UOW R Stop /       Response
Tran  Userid  SC TranType Term   LUName   Type   Program  T/Name Name      NETName       APPLID    Task Seq T OStart Time    Time
---- -------- -- -------- ----  -------- ------- -------- ------ ---- ----------------- --------   ---- --- - ------------ --------
CEJR CBAKER   U  S                       AP:     DFHEJITL             GBIBMIYA.IYK2Z1V2 IYK2Z1V2     58   1 T 15:11:26.947    .3140

                                     ********************** FC Calls ********************** ******* I/O Waits ********  AccMeth
      File                             Get      Put     Browse    Add     Delete   Total     File     RLS      CFDT   Requests
     --------                        -------- -------- -------- -------- -------- -------- -------- -------- -------- --------
     DFHEJDIR              Elapse    .0841    .0000    .0000    .0000    .0000    .0841    .0009    .0000    .0000
                           Count         1        0        0        0        0        1        2        0        0        1

     DFHEJOS               Elapse    .0834    .0000    .0000    .0000    .0000    .0834    .0011    .0000    .0000
                           Count         1        0        0        0        0        1        2        0        0        1

     Total                 Elapse    .1675    .0000    .0000    .0000    .0000    .1675    .0020    .0000    .0000
                           Count         2        0        0        0        0        2        4        0        0        2

                                        Request           Fcty  Conn                                   UOW R Stop /       Response
Tran  Userid  SC TranType Term   LUName   Type   Program  T/Name Name      NETName       APPLID    Task Seq T OStart Time    Time
---- -------- -- -------- ----  -------- ------- -------- ------ ---- ----------------- --------   ---- --- - ------------ --------
CECI CBAKER   TO U        T164  IYCWT164 AP:     DFHECIP  T/T164      GBIBMIYA.IYCWT164 IYK2Z1V2     75   1 T 15:13:16.521  10.0157

       DPL                       DPL LINK
     Program  SYSID               Requests
     -------- -----               --------
     DFH0STAT CJB1         Count         2

     DFH0STAT CJB3         Count         4

     Total                 Count         6

                                        Request           Fcty  Conn                                   UOW R Stop /       Response
Tran  Userid  SC TranType Term   LUName   Type   Program  T/Name Name      NETName       APPLID    Task Seq T OStart Time    Time
---- -------- -- -------- ----  -------- ------- -------- ------ ---- ----------------- --------   ---- --- - ------------ --------
CEMT CBAKER   TO U        T164  IYCWT164 AP:     DFHEMTP  T/T164      GBIBMIYA.IYCWT164 IYK2Z1V2     89   6 T 15:17:57.532  14.5784

                                     ************* TS Calls ************ *** I/O Waits ***          ********* TS Item ********
      TSQueue                          Get    Put_Aux Put_Main  Total      TS     Shr_TS             Get    Put_Aux Put_Main
     ----------------                -------- -------- -------- -------- -------- --------          -------- -------- --------
     T164EZAI              Elapse    .0000    .0000    .0000    .0004    .0000    .0000
                           Count         0        1        0        2        0        0  Length         0       89        0
```

Figure 56. Transaction Resource Usage List report

The report consists of two sections:

1. The Task Identification section that identifies the CICS task. The column headings match the Cross-System Work report (see Figure 38 on page 71) to enable easy cross reference between the reports.
2. The Resource sections associated with the CICS task immediately above: depending on the specified report options, these sections can contain File, Temporary Storage, and Distributed Program Link (DPL) entries.

If applicable, the following message appears after the File statistics:

`CPA0375W Transaction` *`xxxx`* `has used additional Files and exceeded the File Resource Limit of` *`nn`*

If applicable, the following message appears after the Temporary Storage statistics:

`CPA0375W Transaction` *`xxxx`* `has used additional TSQueues and exceeded the TSQueue Resource Limit of` *`nn`*

If applicable, the following message appears after the DPL statistics:

`CPA0375W Transaction` *`xxxx`* `has used additional DPLs and exceeded the DPL Resource Limit of` *`nn`*

The maximum number of files, temporary storage queues, and DPLs monitored for each transaction is limited by the FILE, TSQUEUE, and DPL parameters on the DFHMCT TYPE=INITIAL macro. The default is FILE=8 for files, TSQUEUE=4 for temporary storage queues, and DPL=0 for DPLs. Therefore, you might need to assemble an MCT that specifies FILE, TSQUEUE, and DPL options if the default values are insufficient.

Task identification

The Task identification section provides the following fields. For more information on these fields, see "Task identification fields" on page 335.

If the task number and the APPLID of a task match its originating transaction, then this section contains only a single line. However, if the APPLID or the task number, or both, do not match the originating transaction, then this section contains a second line describing the originating transaction. If a field is not available for the originating transaction, then the second line contains a dash (-) for that field.

Tran
The Transaction ID identifies the name of the transaction that this transaction resource class record represents. See the performance class data field TRAN (owner: DFHTASK, field ID: 001).

Userid
The User identifier of the transaction. See the performance class data field USERID (owner: DFHCICS, field ID: 089).

SC Type of transaction start or start code. See the performance class data field SC (owner: DFHTASK, field ID: 004).

TranType
This column describes the transaction type:

```
S          System transaction
U          User transaction
 M         Mirror transaction
  D        DPL Mirror transaction
   O       ONC RPC Alias transaction
    W      WEB Alias transaction
     B     Bridge transaction
      -    Reserved
       R   CICS BTS Run (ACQPROCESS or activity) transaction synchronous
```

The transaction type is represented as an interpretation of byte 1 of the transaction flags field. See the performance class data field TRANFLAG (owner: DFHTASK, field ID: 164).

Term
The Terminal ID is either the terminal ID or the session ID. This field is blank if the transaction was not associated with a terminal or session facility. See the performance class data field TERM (owner: DFHTERM, field ID: 002).

LUName
The LUname is either the VTAM netname of the terminal ID (if the Access Method for the terminal is VTAM) or the VTAM APPLID of the connection for the session ID. This field is blank if the transaction was not associated with a terminal or session facility. See the performance class data field LUNAME (owner: DFHTERM, field ID: 111).

Request Type
This field describes the type of request that the transaction resource record represents:

Description

AP: An application program request. The **Program** field will identify the initial application program name invoked for the transaction.

Note: Function shipped Distributed Program Link (DPL) requests are interpreted as application requests. In this case the **AP:** is followed by the **----** (as for other function shipping requests) to indicate the types of requests issued by the application program.

FS:---- A function shipping request. The **----** indicate the types of function shipping request:

F	File Control
I	Interval Control
D	Transient Data
S	Temporary Storage

TR:xxxx
A transaction routing request from a terminal-owning region. The *xxxx* is the transaction routing SYSID and identifies the connection name (SYSID) of the remote system to which the transaction was routed. See the performance class data field RSYSID (owner: DFHCICS, field ID: 130).

Program
The initial program name (field: PGMNAME, owner: DFHPROG, field ID: 071). This identifies the initial application program invoked for the transaction. Depending on the type of transaction, this field contains either the application program name as defined in the transaction definition, the program name returned by a user written dynamic routing program, the application program name passed on a function shipped Dynamic Program Link (DPL) request, the initial application program name of an ONC RPC Alias Transaction, or the initial application program name of a WEB Alias Transaction. A program name of **########** indicates that the transaction was invoked using the definition of the transaction ID specified by the DTRTRAN system initialization parameter.

FCTY T
This field is an interpretation of byte 0 of the transaction flags field (field: TRANFLAG, owner: DFHTASK, field ID: 164). It describes the transaction's facility type:

Type	Description
blank	None
T	Terminal or Session
S	Surrogate
D	Transient Data queue
B	Bridge Terminal

FCTY Name
The transaction's facility name (owner: DFHTASK, field ID: 163).

Conn Name
The terminal session connection name (field: TERMCNNM, owner: DFHTERM, field ID: 169). If the terminal facility associated with this transaction is a session, then this field is the name of the owning connection (SYSID).

NETName
This column is the network unit-of-work ID from the system where the network unit-of-work ID originated. This name is constant within each

network unit-of-work ID. See the performance class data field NETUOWPX (owner: DFHTASK, field ID: 097), “DFHTASK fields” on page 287.

APPLID
The APPLID of the CICS system upon which the CMF transaction resource record was created. This field indicates the CICS system that performed the work recorded in the record.

Task
The transaction identification number (field: TRANNUM, owner: DFHTASK, field ID: 031). This is printed for all records to help identify the corresponding records on a Performance List report.

UOW Seq
This column is the syncpoint sequence number from the network unit-of-work ID that was assigned at transaction attach time. See the performance class data NETUOWSX (owner: DFHTASK, field ID: 098), “DFHTASK fields” on page 287.

R T
The performance class record type (field: RTYPE, owner: DFHCICS, field ID: 112):

C Record output for a terminal converse.

D Record output by a user event monitoring point (EMP) DELIVER request.

F Record output for a long running transaction.

S Record output for a syncpoint request.

T Record was output for a transaction termination (detach).

For transaction resource class data, this field is always **T**.

Stop / OStart Time
The first line in this section contains the Stop time (hh:mm:ss.thm) of the transaction (field: STOP, owner: DFHCICS, field ID: 006).

If the section contains two lines, then the second line contains the Start time of the originating transaction.

Response Time
The first line in this section contains the transaction response time. This field is calculated by subtracting the transaction Start Time (field: START, owner: DFHCICS, field ID: 005) from the transaction Stop Time (field: STOP, owner: DFHCICS, field ID: 006).

If the section contains two lines, then the second line shows the elapsed time between the Start time of the originating transaction and the Stop time of the transaction shown on the first line. This is not the response time of the originating transaction: the Stop time of the originating transaction is not available in this report.

File entries

The File entry provides the following fields. For more information on these fields, see “File entry fields” on page 338.

File
The file name of the file used by the transaction.

FC Calls
File Control statistics.

Get Elapse
The elapsed time that the user task waited for completion of GET requests issued for this file.

Get Count
The number of GET requests issued against the file.

Put Elapse
The elapsed time that the user task waited for completion of PUT requests issued for this file.

Put Count
The number of PUT requests issued against the file.

Browse Elapse
The elapsed time that the user task waited for completion of BRO requests issued for this file.

Browse Count
The number of BRO requests issued against the file.

Add Elapse
The elapsed time that the user task waited for completion of ADD requests issued for this file.

Add Count
The number of ADD requests issued against the file.

Delete Elapse
The elapsed time that the user task waited for completion of DEL requests issued for this file.

Delete Count
The number of DEL requests issued against the file.

Total Elapse
The total elapsed time that the user task waited for completion of all requests issued for this file.

Total Count
The total number of all requests issued against the file.

I/O Waits

File Elapse
The total I/O wait time on this file.

File Count
The number of I/O waits on this file.

RLS Elapse
The elapsed time that the user task waited for RLS file I/O on this file.

RLS Count
The number of times that the user task waited for RLS file I/O on this file.

CFDT Elapse
The elapsed time that the user task waited for a data table access request to the coupling facility data table server to complete for this file.

CFDT Count
The number of times that the user task waited for a data table access request to the coupling facility data table server to complete for this file.

AccMeth Requests Count
The number of times the user task invoked file access-method interfaces.

Temporary Storage entries

The Temporary Storage section provides the following fields. For more information on these fields, see "Temporary storage queue entry fields" on page 339.

TSQueue
The name of the temporary storage queue used by the transaction.

TS Calls
Temporary Storage Control statistics.

Get Elapse
The elapsed time that the user task waited for completion of temporary storage GET requests issued against this temporary storage queue.

Get Count
The number of temporary storage GET requests issued against this temporary storage queue.

Put_Aux Elapse
The elapsed time that the user task waited for completion of PUT requests to auxiliary temporary storage.

Put_Aux Count
The number of PUT requests to auxiliary temporary storage issued.

Put_Main Elapse
The elapsed time that the user task waited for completion of PUT requests to main temporary storage.

Put_Main Count
The number of PUT requests to main temporary storage issued.

Total Elapse
The total elapsed time that the user task waited for completion of all requests issued against this temporary storage queue.

Total Count
The total number of all requests issued against this temporary storage queue.

I/O Waits

TS Elapse
The total elapsed time that the user task waited for temporary storage I/O.

TS Count
The number of I/O waits on this temporary storage queue.

Shr_TS Elapse
The elapsed time that the user task waited for an asynchronous request against this shared temporary storage queue to complete.

Shr_TS Count
The number of times that the user task waited for I/O on this shared temporary storage queue.

TS Item

Get Length
The total length of all items obtained from this temporary storage queue.

Put_Aux Length
The total length of all items written to the auxiliary temporary storage queue.

Put_Main Length
The total length of all items written to the main temporary storage queue.

Distributed Program Link entries

The Distributed Program Link (DPL) section provides the following fields. For more information on these fields, see "DPL entry fields" on page 340.

DPL Program
The name of the specific program that issued the DPL request.

SYSID
The ID of the MVS system on which this program ran.

DPL LINK Requests
The number of DPL requests by this program.

Chapter 5. Statistics reports

The Statistics reports are produced from CICS statistics data stored in SMF files. Only the Statistics Alert reports are in this category.

To extract CICS statistics to delimited text files for further processing by other applications, see "Statistics extract" on page 225.

You can also produce Statistics Alert reports outside of a Report Set, from statistics stored in HDBs. For details, see "Statistics Alert HDB Reporting" on page 238.

Statistics Alert reports

The Statistics Alert reports process CICS Transaction Server and CICS Transaction Gateway statistics records.

Before requesting a Statistics Alert report, you need to use the CICS PA dialog to create a Statistics Alert definition (for details on how to do this, see the *CICS PA User's Guide.*). A Statistics Alert definition specifies conditions, in terms of statistics field values, that interest you. When you request a Statistics Alert report, you specify the Statistics Alert definition that you want to use to generate the report. The report identifies any statistics in the input data that match the conditions in the definition.

Report command

You can request Statistics Alert reports from a Report Set in the CICS PA dialog: select the **Alert** report in the **Statistics Reports** category.

In batch, you use the `STATSALERT` command to request a Statistics Alert report.

The command to request the default report is:

```
CICSPA STATSALERT(STALTDEF(statistics-alert-definition))
```

where *statistics-alert-definition* is the name of a Statistics Alert definition that is stored in the current HDB Register, identified in the JCL by the ddname CPAHDBRG. This produces a report sorted by interval.

To tailor the report, you can specify report options as follows:

```
CICSPA STATSALERT([OUTPUT(ddname),]
                  [EXTERNAL(ddname),]
                  STALTDEF(statistics-alert-definition),
                  [BY(APPLID[(LIST,SUMMARY)]|
                      ALERT[(LIST,SUMMARY)]|
                      COLLECT|
                      INTERVAL|
                      RESOURCE),]
                  [TYPE(EOD,INT,USS,REQ,RRT),]
                  [LINECount(nnn),]
                  [TITLE1('...up to 64 characters...'),]
                  [TITLE2('...up to 64 characters...')])
```

Report content

The content of a Statistics Alert report identifies statistics in the input data that match Conditions in the specified Statistics Alert definition. If the statistics do not match any Conditions, CICS PA issues a message rather than creating an empty report.

All Statistics Alert reports have the same general structure. Each report consists of one or more sections. Each section consists of a section heading followed by tabular data under column headings.

The content of the section heading and tabular data depend on the sorting option you request and, for reports sorted by APPLID or Alert, the report type: List (the default) or Summary. Other sorting options are available only as List reports. List reports show details of each instance of an Alert. Summary reports show the number of Alerts, rather than the details of each instance.

If an Alert refers to tabular (multi-record) statistics, the report line following the Alert identifies the resource name of the statistics record that triggered the alert. For example, for an Alert that refers to Dispatcher TCB Modes statistics (that contains one record per TCB mode), the second line identifies the TCB mode, such as `TCB Mode Name = QR`.

List by APPLID

The **Statistics Alerts - List by APPLID** report contains a section for each APPLID (CICS system) whose statistics records have triggered an Alert.

The sections are sorted by the following information in the section headings:

System, Image, VRM, Type

Within each section, the tabular data is sorted by the following column headings:

Severity, Collection Time

Here is an example section:

```
System: CCVQ32C    Image: FTS1   VRM: 650   Type: TS

Sev Alert                                                Threshold       Actual  Collection Time      Type
W   Program load requests that waited                           >0            2  2008-10-24 00.00.01   EOD
I   DSA limit                                                 >=0K        5120K  2008-10-24 00.00.01   EOD
I   DSA allocated                                             >=0K        2304K  2008-10-24 00.00.01   EOD
I   DSA peak                                                  >=0K        2304K  2008-10-24 00.00.01   EOD
⋮
```

Figure 57. Statistics Alerts - List by APPLID report: example section

For a longer example of this report, see “Example: List and Summary by APPLID” on page 138.

Summary by APPLID

Similar to the List by APPLID report, the **Statistics Alerts - Summary by APPLID** report contains a section for each APPLID (CICS system) whose statistics records have triggered an Alert.

The sections are sorted by the following information in the section headings:

System, Image, Type

Within each section, the tabular data is sorted by the following column headings:

Severity, Alert, Resource Name

Here is an example section:

```
System: CCVQ32C    Image: FTS1   Type: TS

Sev Alert                                                          Intervals  Alerts
W   Program load requests that waited                                      1       1
I   Tasks: limit                                                           1       1
I   Tasks: current                                                         1       1
⋮
```

Figure 58. Statistics Alerts - Summary by APPLID report: example section

For a longer example of this report, see "Example: List and Summary by APPLID" on page 138.

List by Alert

The **Statistics Alerts - List by Alert** report contains a section for each Condition (in the specified Statistics Alert definition) that matches the input statistics data.

The section headings are the Alert text of the Conditions. The sections are sorted in the order in which the Conditions appear in the Statistics Alert definition.

Within each section, the tabular data is sorted by the following column headings:

Severity, System, Image, Collection Time, Type

Here is an example section:

```
Alert: Transaction dumpcode taken

Sev System    Image  Collection Time      Type        Threshold       Actual
W   CCVQ32D2  FTS1   2008-10-24 00.00.00  TS EOD             >0            9
    Dump Code = ASP9
W   CCVT41CX  FTS1   2008-11-19 11.53.21  TS EOD             >0          104
    Dump Code = AWBM
W   CCVT41CX  FTS1   2008-11-20 00.00.00  TS EOD             >0           75
    Dump Code = AWBM
W   CCVT41CX  FTS1   2008-12-05 12.00.00  TS INT             >0            8
⋮
```

Figure 59. Statistics Alerts - List by Alert report: example section

Summary by Alert

Similar to the List by Alert report, the **Statistics Alerts - Summary by Alert** report contains a section for each Condition (in the specified Statistics Alert definition) that matches the input statistics data.

As per the List by Alert report, the section headings are the Alert text of the Conditions. The sections are sorted in the order in which the Conditions appear in the Statistics Alert definition.

Within each section, the tabular data is sorted by the following column headings:

Severity, Type, APPLID, Image, Resource

Here is an example section:

```
Alert: Transaction dumpcode taken

Sev System    Image  Type                                                Intervals   Alerts
W   CCVQ32D2  FTS1   TS                                                          1        1
    Dump Code = ASP9                                                                       1
W   CCVT41CX  FTS1   TS                                                          4        4
    Dump Code = AWBM                                                                       4
W   CCVT41M   FTS1   TS                                                          1        1
    Dump Code = ATNI                                                                       1
⋮
```

Figure 60. Statistics Alerts - Summary by Alert report: example section

List by Collection Time

The **Statistics Alerts - List by Collection Time** report contains a section for each statistics collection time.

The section headings are the collection time. The sections are sorted in chronological order.

Within each section, the tabular data is sorted by the following column headings:

Severity, System, Image, VRM, Type

Here is an example section:

```
Collection Time: 2010-03-02 02.33.10

Sev Alert                                                Threshold       Actual  System    Image  VRM  Type
I   DSA limit                                                 >=0K        5120K  IYK3Z7FA  MV2C   660  TS EOD
I   DSA allocated                                             >=0K        1280K  IYK3Z7FA  MV2C   660  TS EOD
I   DSA peak                                                  >=0K        1280K  IYK3Z7FA  MV2C   660  TS EOD
⋮
```

Figure 61. Statistics Alerts - List by Collection Time report: example section

List by Interval

The **Statistics Alerts - List by Interval** report contains a section for each statistics interval. A statistics interval consists of the statistics for a particular combination of CICS system, collection type (such as EOD), and collection time.

The section headings identify the statistics interval. The sections are sorted by the following information in the section headings:

System, Image, VRM, Type, Collection Time

Within each section, the tabular data is sorted by severity.

Here is an example section:

```
System: CCVQ32C   Image: FTS1  VRM: 650  Type: TS EOD  Collection Time: 2008-10-24 00.00.01

Sev Alert                                                  Threshold       Actual
I   Program load-to-use ratio (%)                               >=25           50
    Program Name = DFHEIQCF
I   Program load-to-use ratio (%)                               >=25           50
    Program Name = DFHEIQDH
I   Program load-to-use ratio (%)                               >=25           50
    Program Name = DFHEIQDI
⋮
```

Figure 62. Statistics Alerts - List by Interval report: example section

List by Resource

The **Statistics Alerts - List by Resource** report processes tabular (multi-record) statistics only. This report does not process label-based (single-record) statistics.

This report contains a section for each resource name in the input statistics data that triggers an Alert. For example, for Alerts triggered by Programs statistics, the resource name is the value of the Program Name field.

The section headings have the following format:

description = value

where *description* is the resource field description (such as "Program Name") and *value* is the field value.

The sections are sorted in alphabetical order of resource field description, then resource field value.

Within each section, the tabular data is sorted by the following column headings:

Severity, System, Image, VRM, Type, Collection Time

Here is an example section:

```
Resource: Dump Code = AEXZ

Sev  Alert                                              Threshold       Actual  System   Image VRM Type   Collection Time
W    Transaction dumpcode taken                                >0            3  IYK3ZHD1 MV2C  650 TS EOD 2010-02-14 15.34.20
W    Transaction dumpcode taken                                >0            1  IYK3ZOF9 MV2C  640 TS INT 2009-12-16 09.15.00
⋮
```

Figure 63. Statistics Alerts - List by Resource report: example section

If a Condition in the Statistics Alert definition specifies a Resource value, it does not necessarily match the Resource value in the report section heading. This is because some multi-record statistics have resource identification fields in addition to the field shown in the section heading, and the Resource value in the Statistics Alert definition might match one of those other fields. The Resource value in the definition selects records for testing against the Condition, whereas the Resource value in the report identifies the record that matched the Condition. For example, for Programs statistics, the Resource field value in the Statistics Alert definition might match the program name shown in the section heading, or it might match the program library name.

Column and section heading descriptions

Statistics Alert reports can contain the following column headings and section heading labels, depending on the sorting option and report type:

Alerts
Summary reports only: the number of instances of this Alert. (Statistics records for a single interval can trigger multiple instances of an Alert.)

Actual The value of the formula (as specified in the Statistics Alert definition), calculated using the statistics in the input data, that triggered this Alert.

Alert The Alert text, as specified in the Statistics Alert definition.

Collection Time
The collection time of the statistics that triggered this Alert.

Image The MVS image on which the CICS system ran.

Intervals
Summary reports only: the number of statistics collection intervals in which this Alert was triggered.

Sev The severity of the threshold for this alert, as specified in the Statistics Alert definition:
C Critical
W Warning
I Information

Report sorted by severity show the most severe alerts first: C, then W, then I.

System
The APPLID of the CICS system.

Threshold
The threshold for this alert corresponding to the severity (shown in the **Sev** column), as specified in the Statistics Alert definition.

Type The type of CICS system, the type of statistics collection interval, or both.

The type of CICS system can be either:
TS CICS Transaction Server
TG CICS Transaction Gateway

The type of statistics collection interval can be one of the following:
EOD End-of-day
REQ Requested
USS Unsolicited
INT Interval
RRT Requested reset

For example, **TS EOD** refers to an end-of-day statistics collection interval for a CICS Transaction Server system.

VRM The release of CICS Transaction Gateway or CICS Transaction Server that produced the statistics.

Example: List and Summary by APPLID

The following command produces a **Statistics Alerts - List by APPLID** report followed by a **Summary by APPLID** report in the same output data set, STAL0001:

```
CICSPA STATSALERT(OUTPUT(STAL0001),
                  EXTERNAL(CPAXW001),
                  STALTDEF(SAMPLE2),
                  BY(APPLID(LIST,SUMMARY)),
                  TYPE(EOD,REQ,RRT,INT,USS))
```

```
 V3R2M0                                          CICS Performance Analyzer
                                              Statistics Alerts - List by APPLID
                                              ___________________________________
STAL0001 Printed at 12:03:45  3/15/2011     Data from 02:33:10  1/12/2009 to 09:24:07  1/14/2009                    Page       1


System: CCVQ32C    Image: FTS1   VRM: 650   Type: TS

Sev Alert                                                  Threshold       Actual  Collection Time      Type
W   Program load requests that waited                             >0            2  2009-01-13 00.00.01   EOD
I   DSA limit                                                   >=0K        5120K  2009-01-13 00.00.01   EOD
I   DSA allocated                                               >=0K        2304K  2009-01-13 00.00.01   EOD
I   DSA peak                                                    >=0K        2304K  2009-01-13 00.00.01   EOD
I   EDSA limit                                                  >=0K      614400K  2009-01-13 00.00.01   EOD
I   EDSA allocated                                              >=0K       49152K  2009-01-13 00.00.01   EOD
I   EDSA peak                                                    >0K       49152K  2009-01-13 00.00.01   EOD
I   MEMLIMIT size                                               >=0M           0M  2009-01-13 00.00.01   EOD
I   Active address space: current                                >=0M           0M  2009-01-13 00.00.01   EOD
I   Active address space: peak                                   >=0M           0M  2009-01-13 00.00.01   EOD
I   Active GDSA: current                                         >=0M           0M  2009-01-13 00.00.01   EOD
I   Active GDSA: peak                                            >=0M           0M  2009-01-13 00.00.01   EOD
I   Dispatcher settings: ICV (ms)                                   *        5.000  2009-01-13 00.00.01   EOD
I   Dispatcher settings: ICVR (ms)                                  *        5.000  2009-01-13 00.00.01   EOD
I   Dispatcher settings: ICVTSD (ms)                                *        5.000  2009-01-13 00.00.01   EOD
I   Dispatcher settings: PRTYAGE (ms)                               *       32.768  2009-01-13 00.00.01   EOD
I   Dispatcher settings: SUBTSKS                                    *            1  2009-01-13 00.00.01   EOD
I   Dispatcher settings: MROBTCH                                    *            1  2009-01-13 00.00.01   EOD
I   Open TCBs limit                                                 *           12  2009-01-13 00.00.01   EOD
    TCB Pool = OPEN
I   Open TCBs current                                               *            0  2009-01-13 00.00.01   EOD
    TCB Pool = OPEN
⋮
I   Program load-to-use ratio (%)                                >=25          100  2009-01-13 00.00.01   EOD
    Program Name = CEEEV003
⋮

System: CCVQ32D1   Image: FTS1   VRM: 650   Type: TS

Sev Alert                                                  Threshold       Actual  Collection Time      Type
W   Program load requests that waited                             >0            8  2009-01-13 00.00.00   EOD
W   Maximum active transactions in class reached                   >0          329  2009-01-13 00.00.00   EOD
    Tclass Name = DFHTCL02
⋮
```

Figure 64. Statistics Alerts - List by APPLID report

```
 V3R2M0                                                CICS Performance Analyzer
                                                   Statistics Alerts - Summary by APPLID
                                                  ____________________________________________
STAL0001 Printed at 12:03:45  3/15/2011     Data from 02:33:10  1/12/2009 to 09:24:07  1/14/2009                      Page       1


System: CCVQ32C    Image: FTS1   Type: TS

Sev Alert                                                                  Intervals  Alerts
W   Program load requests that waited                                              1        1
I   Tasks: limit                                                                   1        1
I   Tasks: current                                                                 1        1
I   Tasks: peak                                                                    1        1
I   Tasks: total                                                                   1        1
I   Transaction class: task limit                                                  6       14
    Tclass Name = DFHCOMCL                                                                  1
    Tclass Name = DFHEDFTC                                                                  1
    Tclass Name = DFHTCIND                                                                  1
⋮

System: CCVQ32D1   Image: FTS1   Type: TS

Sev Alert                                                                  Intervals  Alerts
W   Maximum active transactions in class reached                                   1        1
    Tclass Name = DFHTCL02                                                                  1
W   Temporary storage: buffer waits on DFHTEMP                                     1        1
W   Program load requests that waited                                              1        1
I   Tasks: limit                                                                   1        1
I   Tasks: current                                                                 1        1
I   Tasks: peak                                                                    1        1
I   Tasks: total                                                                   1        1
I   Transaction class: task limit                                                  6       14
    Tclass Name = DFHCOMCL                                                                  1
    Tclass Name = DFHEDFTC                                                                  1
    Tclass Name = DFHTCIND                                                                  1
⋮
```

Figure 65. Statistics Alerts - Summary by APPLID report

Chapter 6. Subsystem reports

The Subsystem reports are produced from database subsystem accounting data stored in SMF files. The reports in this category are:
- "DB2 report"
- "WebSphere MQ report" on page 160
- "OMEGAMON reports" on page 179

DB2 report

The DB2 report processes CICS CMF performance class (SMF 110) records and DB2 accounting (SMF 101) records to produce a consolidated and detailed view of DB2 usage by your CICS systems. The DB2 report enables you to view CICS and DB2 resource usage statistics together in a single report.

The DB2 List report shows detailed information of DB2 activity for each transaction. The DB2 Summary reports summarize DB2 activity by transaction:
- For CMF records: by APPLID/transaction/program
- For DB2 records: by APPLID/transaction/program/SSID/plan

The reports include the following DB2 information:
- DB2 Thread Identification, for easy cross-reference to DB2 PM
- Class 1 Thread elapsed and CPU times
- Class 2 In-DB2 elapsed and CPU times
- Class 3 Suspend times
- Buffer Manager statistics
- Locking statistics
- SQL DML statistics

A Recap report showing processing statistics is always printed at the end.

Report command

The DB2 report can be requested from a Report Set in the CICS PA dialog. Select the **DB2** report in the **Subsystem Reports** category.

In batch, the `DB2` command is used to request the DB2 report.

The command to produce the default report, a short summary showing average values, is:

```
CICSPA DB2
```

or

```
CICSPA DB2(SHORTSUM)
```

To produce a long summary giving average and maximum values:

```
CICSPA DB2(LONGSUM)
```

To produce a detailed listing of all network units-of-work with DB2 activity:

```
CICSPA DB2(LIST)
```

To tailor the report, you can specify report options as follows:

```
CICSPA DB2(
            [OUTPUT(ddname),]
            [EXTERNAL(ddname),]
            [LIST(
               CLASS1,CLASS2,CLASS3,BUFFER,LOCKING,DML1,DML2|ALL),]
            [LONGSUMMARY(
               CLASS1,CLASS2,CLASS3,BUFFER,LOCKING,DML1,DML2|ALL),]
            [SHORTSUMMARY,]
            [SSID(id1,id2,...),]
            [CMFONLY,]
            [LISTZERO,]
            [MAXLONGSUM|NOMAXLONGSUM,]
            [LINECOUNT(nnn),]
            [TITLE1('...sub-heading left ...'),]
            [TITLE2('...sub-heading right...'),]
            [SELECT(PERFORMANCE(INCLUDE|EXCLUDE(field1(values1),...),
                                ...))])
```

The report processes all CMF transaction performance class records for network units-of-work containing multiple performance records as well as those with only a single performance record.

You can request a report from all available records, or you can specify selection criteria to request a report from only the records that meet specific requirements.

Report content

You can request up to three reports:

1. `DB2(LIST)` requests the DB2 List report (see “List report”).
2. `DB2(LONG)` requests the DB2 Long Summary report (see “Long Summary report” on page 147).
3. `DB2(SHORTSUM)` requests the DB2 Short Summary report (see “Short Summary report” on page 151). This is the default.

The Recap report is always produced at the end of DB2 report processing (see “Recap report” on page 153).

In the DB2 report, all numeric fields are formatted to 8 bytes.

The following abbreviations can appear in numeric fields:

N/A Occurs when the field is not applicable. For example, DB2 Connection Wait Time is not applicable when DB2REQCT=0. Also, in the Recap report, various DB2 record and matching statistics are not applicable when no DB2 records are selected, hence no record matching takes place.

N/C Occurs when a value cannot be calculated. For example, in the Recap report, when the ‘% of Total' field cannot be calculated because the total is zero.

N/P Occurs when the data is not present. For example, in the DB2 List or Long Summary reports, when DB2 details are requested that are not present in the DB2 Accounting records. For example, you requested Class 3 details when only DB2 Accounting Classes 1 and 2 were traced.

List report

The DB2 List report provides a detailed list of all network units-of-work with DB2 activity. This report consolidates CICS CMF performance class records and DB2 accounting statistics from a single or multiple CICS systems.

The following command produces a List report like that in Figure 66 on page 143.

```
CICSPA DB2(LIST(ALL),LISTZERO)


 V3R2M0                                          CICS Performance Analyzer
                                                        DB2 - List
                                   ____________________________________________
DB2R0001 Printed at 12:03:45  3/15/2011    Data from 20:14:56  6/22/2007 to 21:14:31  6/22/2007                        Page       1


Tran/ Userid/ Program/                UOW R               ..DB2 Wait Time..   DB2    User CPU                            Response A
SSID  Authid  Planname  APPLID    Task Seq T Term  LUName   Connect  Thread   ReqCnt    Time     Start Time    Stop Time    Time   B

ILGN 5000853  NWTPXHPS ATPHP20   87302   4 T <B7N ATPWTC1   .000000  .000000      506  .121424  20:14:58.028 20:14:58.731  .703717

IBOA 5000853  NWTPXHPS ATPHP20   87311   3 T <B7N ATPWTC1   .000000  .000000      223  .211792  20:15:00.049 20:15:00.437  .387405

DBCR DB2OPER  AGTPPLAN ATPHP20   87311  Thread Identification   ID=POOLIBOA0019  NETName=DFHEXCIU.3MSE002A  UOWID=C8DE57436768
                                        Begin Time: 20:15:00.051632  6/22/07  End Time: 20:15:00.434859  6/22/07
                                        Class1: Thread Time     Elapsed= .383227  CPU= .188482
                                        Class2: In-DB2 Time     Elapsed= .337977  CPU= .185725
                                        Class3: Suspend Time    Total  = .109145  I/O= .075235  Lock/Latch= .002409  Other= .031501
                                        Buffer Manager Summary  GtPgRq=    3506  SyPgUp=      66
                                        Locking Summary         Suspnd=       0  DeadLk=       0  TmeOut=       0  MxPgLk=      21
                                        SQL DML Query/Update    Sel=      54  Ins=       7  Upd=       5  Del=       0
                                        SQL DML 'Other'         Des=       0  Pre=       0  Ope=      18  Fet=      31  Clo=      18

CSMI 5000853  NWTPPOLL ATPHP20   87312   2 T <B7O ATPWTC1   .000000  .000000       10  .003120  20:15:00.053 20:15:00.078  .025131

DBCR DB2OPER  AGTPPLAN ATPHP20   87312  Thread Identification   ID=POOLPOLL0020  NETName=DFHEXCIU.3MSE002A  UOWID=C8DE57447A46
                                        Begin Time: 20:15:00.054013  6/22/07  End Time: 20:15:00.077526  6/22/07
                                        Class1: Thread Time     Elapsed= .023513  CPU= .001434
                                        Class2: In-DB2 Time     Elapsed= .021482  CPU= .001291
                                        Class3: Suspend Time    Total  = .019722  I/O= .019630  Lock/Latch= .000092  Other= .000000
                                        Buffer Manager Summary  GtPgRq=      28  SyPgUp=       0
                                        Locking Summary         Suspnd=       0  DeadLk=       0  TmeOut=       0  MxPgLk=       0
                                        SQL DML Query/Update    Sel=       5  Ins=       0  Upd=       0  Del=       0
                                        SQL DML 'Other'         Des=       0  Pre=       0  Ope=       1  Fet=       3  Clo=       1
```

Figure 66. DB2 List report

In the DB2 List report, two types of data are presented:

1. The first is a single data line (in column format) for each CMF performance class record
2. The second is a block of data lines (in row format) for each associated DB2 accounting record

Records that are part of the same network unit-of-work are printed sequentially in groups separated by blank lines. A network unit-of-work will only be presented if it involved some DB2 activity.

The DB2 List report contains the following information:

CMF performance class based fields: Each CMF-based line of the report represents a CMF data record, not necessarily a task. It is possible for CMF data to be written at Syncpoint, on a Frequency basis (long running applications), at each terminal Converse (conversational), or at user-specified Event Monitoring Points (EMPs) using a Deliver request. The Task Number, UOW Sequence, and Record Type fields are provided to clarify what the line of data represents.

By default, only CMF performance class records with DB2 Request Count greater than zero (DB2REQCT>0) are included in the report. You can specify **LISTZERO** to also include those with DB2REQCT=0.

Tran
Transaction ID (field: TRAN, owner: DFHTASK, field ID: 001).

Userid
User Identifier of the transaction (owner: DFHCICS, field ID: 089).

Program
Initial Program Name (field: PGMNAME, owner: DFHPROG, field ID: 071).

APPLID
APPLID of the CICS system where the CMF record was created.

Task
Transaction identification number (owner: DFHTASK, field ID: 031).

UOW Seq
Syncpoint sequence number from the Network UOWID (field: NETUOWSX, owner: DFHTASK, field ID: 098).

RT Performance class record type (owner: DFHCICS, field ID: 112). The record types are:

C	Converse record; Conversational transaction terminal converse
D	Deliver record; Deliver request at a user EMP
F	Frequency record; Long running transaction
S	Syncpoint record
T	Termination (detach) record

Term
Terminal ID (field: TERM, owner: DFHTERM, field ID: 002).

LUName
LU name (field: LUNAME, owner: DFHTERM, field ID: 111).

DB2 Wait Time: Connect
DB2 Connection Wait time; wait for DB2 subtask to become available (owner: DFHDATA, field ID: 188).

DB2 Wait Time: Thread
DB2 Ready Queue Wait time; wait for DB2 thread to become available (owner: DFHDATA, field ID: 187).

DB2 ReqCnt
DB2 Request Count (EXEC SQL and IFI) (field: DB2REQCT, owner: DFHDATA, field ID: 180).

User CPU Time
Transaction CPU time (owner: DFHTASK, field ID: 008).

Start Time
Start Time (hh:mm:ss.thm) of the transaction (owner: DFHCICS, field ID: 005).

Stop Time
Stop Time (hh:mm:ss.thm) of the transaction (owner: DFHCICS, field ID: 006).

Response Time
Transaction response time, derived from Stop-Start time (owner: DFHCICS, field IDs: 006-005).

A B
Y in this column indicates that the transaction abended.

DB2 accounting based fields: A block of data lines is presented for each DB2 Accounting record associated with the CMF performance record. This data is not present if **CMFONLY** is specified.

SSID
DB2 Subsystem ID (field: QWHSSSID). The values are filtered by the **SSID** operand.

Authid
Authorization ID (field: QWHCAID).

Planname
Plan name (field: QWHCPLAN).

APPLID
Connection name (field: QWHCCN, when connecting system type QWHCATYP is CICS attach QWHCCICS).

Task
Transaction identification number which, when combined with the APPLID field, identifies the CICS task to which the DB2 Accounting data relates.

This number is derived by CICS PA:

- If CICS PA matches the DB2 Accounting record to a single CICS task, the CMF task number is printed against the DB2 Accounting record details, otherwise the task number is **N/C** (cannot be calculated).
- If this field is N/C, then either the DB2 Accounting data could not be correlated to a task, or it was found to relate to more than one task in the Network UOW. This can occur, for example, if thread reuse occurs within a Network UOW and ACCOUNTREC(TASK) is being used. CICS PA will not apportion statistics. If this field is N/C, then the DB2 data will not be included in the Summary reports.

Thread Identification:
This is always present.

Thread ID
Correlation ID value (field: QWHCCV).

CICS NETName
To correlate to DB2 PM reports.

CICS UOWID
To correlate to DB2 PM reports.

Begin Time
Begin time (hh:mm:ss.thm mm/dd/yy) of the DB2 accounting period (STCK field: QWACBSC).

End Time
End time (hh:mm:ss.thm mm/dd/yy) of the DB2 accounting period (STCK field: QWACESC).

Note: When you run the DB2 report on a system with a different time zone setting to that of the SMF data, the DB2 time stamps can be out of sync with the CMF time stamps. Every CMF record includes a time zone conversion factor. CICS PA uses this to convert the time stamps to reflect the local time of the SMF data. DB2 records, however, do not have a time zone conversion factor. CICS PA uses the reporting system's time zone. To synchronize the CMF and DB2 time stamps, specify the **ZONE** operand to match the time zone of the SMF data. The ZONE specification is used to convert both CMF and DB2 time stamps to local time, keeping them in sync.

Any combination of the following DB2 data lines can be requested, or you can specify **ALL** to request all of them. If none are specified, the default is **CLASS1, CLASS2, BUFFER, LOCKING.**

Class1: Thread Time
This line is present only if **CLASS1** is specified.

Elapsed
Elapsed time covered by the DB2 Accounting record; derived from End

Time minus Begin Time. It gives the time from when the DB2 thread is obtained (at the first SQL call) to the time it is terminated or reused by another sign-on (which might be well after the task completes if it is a protected thread).

CPU TCB CPU time used by the thread; derived from QWACEJST minus QWACBJST.

Class2: In-DB2 Time
This is only available when DB2 Class 2 Accounting Trace data is present. This line is present only if **CLASS2** is specified.

Elapsed
Accumulated elapsed time used in DB2 (field: QWACASC).

CPU Accumulated TCB CPU time used in DB2 (field: QWACAJST).

Class3: Suspend Time
This is only available when DB2 Class 3 Accounting Trace data is present. This line is present only if **CLASS3** is specified.

Total Total Class 3 suspend time.

I/O Accumulated elapsed I/O wait time (field: QWACAWTI).

Lock/Latch
Accumulated total of all Local and Global lock times.
1. Accumulated lock and latch time (field: QWACAWTL)
2. Accumulated wait time due to global contention for parent L-locks. (field: QWACAWTJ)
3. Accumulated wait time due to global contention for child L-locks (field: QWACAWTK)
4. Accumulated wait time due to global contention for other L-locks (field: QWACAWTM)
5. Accumulated wait time due to global contention for pageset/partition P-locks (field: QWACAWTN)
6. Accumulated wait time due to global contention for page P-locks (field: QWACAWTO)
7. Accumulated wait time due to global contention for other P-locks (field: QWACAWTQ)

Other Total of the other eight Class 3 suspend clocks:
1. Log Write I/O (field: QWACAWLG)
2. Page Latch contention (field: QWACAWTP)
3. Send Message to other DB2 members in the data sharing group (field: QWACAWTG)
4. Stored Procedure waiting for available TCB (field: QWACCAST)
5. User-defined function waiting for available TCB (field: QWACUDST)
6. Read I/O done under another Thread (field: QWACAWTR)
7. Write I/O done under another Thread (field: QWACAWTW)
8. Synchronous Execution Unit Switch for DB2 Commit, Abort, or Deallocation processing (field: QWACAWTE)

Buffer Manager Summary
These fields will give the total for all buffer pools. This line is present only if **BUFFER** is specified.

GtPgRq
Number of Get Page requests issued (field: QBACGET).

SyPgUp
Number of system page (buffer) updates (field: QBACSWS).

Locking Summary
This line is present only if **LOCKING** is specified.

Suspnd
Number of suspends due to lock conflict (field: QTASLOC).

DeadLk
Number of deadlocks (field: QTXADEA).

TmeOut
Number of timeouts (field: QTXATIM).

MxPgLk
Maximum number of page locks held (field: QTXANPL).

SQL DML Query/Update
This line is present only if **DML1** is specified.

Sel Number of SELECT statements processed (field: QXSELECT).

Ins Number of INSERT statements processed (field: QXINSRT).

Upd Number of UPDATE statements processed (field: QXUPDTE).

Del Number of DELETE statements processed (field: QXDELET).

SQL DML 'Other'
This line is present only if **DML2** is specified.

Des Number of DESCRIBE, DESCRIBE CURSOR, DESCRIBE INPUT, and DESCRIBE PROCEDURE statements processed (field: QXDESC).

Pre Number of SQL PREPARE statements processed (field: QXPREP).

Ope Number of OPEN statements processed (field: QXOPEN).

Fet Number of FETCH statements processed (field: QXFETCH).

Clo Number of CLOSE statements processed (field: QXCLOSE).

Long Summary report

The DB2 Long Summary report provides a summary of DB2 activity by transaction and program within APPLID, giving average and maximum values for each.

The Summary report represents a subset of the total data presented in the DB2 List report. It includes DB2 data that can be matched within a network unit-of-work to a *single* task, or multiple tasks that all used the same transaction and program. There is no data apportioning by CICS PA.

The DB2 report shown in Figure 67 on page 148 was created using the command:

```
CICSPA DB2(LONG(ALL))
```

```
V3R2M0                                          CICS Performance Analyzer
                                                  DB2 - Long Summary

DB2R0001 Printed at 12:03:45  3/15/2011    Data from 15:41:19  7/12/2010 to 16:19:15  7/12/2010    APPLID CICPAOR1     Page       1

                            Avg      Max       Avg      Max       Avg      Max       Avg      Max       Avg      Max
Tran/ Program/ #Tasks/   DB2ConWt DB2ConWt  DB2ThdWt DB2ThdWt   DB2Rqst  DB2Rqst   UserCPU  UserCPU  Response Response   #Abends
SSID  Planname #Threads      Time     Time      Time     Time     Count    Count      Time     Time      Time     Time

CRDE  CORD14P         2     .0000    .0000     .0000    .0000      24.0       24   .036896  .052480     .3141    .5208         0

DB2P  CPAPLAN         4  Thread Utilization       Entry=       0  Pool=       4  Command=       0
                         Class1: Thread Time      Avg: Elapsed=   .0369  CPU= .020809
                                                  Max: Elapsed=   .0395  CPU= .024879
                         Class2: In-DB2 Time      Avg: Elapsed=   .0166  CPU= .015381
                                                  Max: Elapsed=   .0201  CPU= .019369
                         Class3: Suspend Time     Avg: Total  =     N/P  I/O=     N/P  Lock/Latch=     N/P  Other=     N/P
                                                  Max: Total  =     N/P  I/O=     N/P  Lock/Latch=     N/P  Other=     N/P
                         Buffer Manager Summary   Avg: GtPgRq=     3.3  SyPgUp=      .0
                                                  Max: GtPgRq=       7  SyPgUp=       0
                         Locking Summary          Avg: Suspnd=      .0  DeadLk=      .0  TmeOut=      .0  MxPgLk=     1.0
                                                  Max: Suspnd=       0  DeadLk=       0  TmeOut=       0  MxPgLk=       1
                         SQL DML Query/Update     Avg: Sel=      .0  Ins=      .0  Upd=      .0  Del=      .0
                                                  Max: Sel=       0  Ins=       0  Upd=       0  Del=       0
                         SQL DML 'Other'          Avg: Des=      .0  Pre=      .0  Ope=     1.0  Fet=    10.0  Clo=     1.0
                                                  Max: Des=       0  Pre=       0  Ope=       1  Fet=      10  Clo=       1

CRD4  CORD04P         3     .0000    .0000     .0000    .0000    3075.3     9178  1.593973 4.693520    8.5758  24.9328         0

DB2P  CPAPLAN         4  Thread Utilization       Entry=       0  Pool=       4  Command=       0
                         Class1: Thread Time      Avg: Elapsed=   .0569  CPU= .025045
                                                  Max: Elapsed=   .0850  CPU= .029168
                         Class2: In-DB2 Time      Avg: Elapsed=   .0205  CPU= .018777
                                                  Max: Elapsed=   .0241  CPU= .022986
                         Class3: Suspend Time     Avg: Total  =     N/P  I/O=     N/P  Lock/Latch=     N/P  Other=     N/P
                                                  Max: Total  =     N/P  I/O=     N/P  Lock/Latch=     N/P  Other=     N/P
                         Buffer Manager Summary   Avg: GtPgRq=     3.3  SyPgUp=      .0
                                                  Max: GtPgRq=       7  SyPgUp=       0
                         Locking Summary          Avg: Suspnd=      .0  DeadLk=      .0  TmeOut=      .0  MxPgLk=     1.0
                                                  Max: Suspnd=       0  DeadLk=       0  TmeOut=       0  MxPgLk=       1
                         SQL DML Query/Update     Avg: Sel=      .0  Ins=      .0  Upd=      .0  Del=      .0
                                                  Max: Sel=       0  Ins=       0  Upd=       0  Del=       0
                         SQL DML 'Other'          Avg: Des=      .0  Pre=      .0  Ope=     1.0  Fet=    10.0  Clo=     1.0
                                                  Max: Des=       0  Pre=       0  Ope=       1  Fet=      10  Clo=       1
 . . .

*** Total ***        23     .0000    .0000     .0000    .0000     417.3     9178   .227745 4.693520    1.2403  24.9328         0

DB2P                 26  Thread Utilization       Entry=       0  Pool=      26  Command=       0
                         Class1: Thread Time      Avg: Elapsed=   .0702  CPU= .025824
                                                  Max: Elapsed=   .5211  CPU= .055524
                         Class2: In-DB2 Time      Avg: Elapsed=   .0204  CPU= .018508
                                                  Max: Elapsed=   .0471  CPU= .040673
                         Class3: Suspend Time     Avg: Total  =     N/P  I/O=     N/P  Lock/Latch=     N/P  Other=     N/P
                                                  Max: Total  =     N/P  I/O=     N/P  Lock/Latch=     N/P  Other=     N/P
                         Buffer Manager Summary   Avg: GtPgRq=     2.8  SyPgUp=      .0
                                                  Max: GtPgRq=      11  SyPgUp=       0
                         Locking Summary          Avg: Suspnd=      .0  DeadLk=      .0  TmeOut=      .0  MxPgLk=     1.0
                                                  Max: Suspnd=       0  DeadLk=       0  TmeOut=       0  MxPgLk=       1
                         SQL DML Query/Update     Avg: Sel=      .0  Ins=      .0  Upd=      .0  Del=      .0
                                                  Max: Sel=       0  Ins=       0  Upd=       0  Del=       0
                         SQL DML 'Other'          Avg: Des=      .0  Pre=      .0  Ope=     1.2  Fet=    13.8  Clo=     1.2
                                                  Max: Des=       0  Pre=       0  Ope=       2  Fet=      30  Clo=       2
```

Figure 67. DB2 Long Summary report

In the DB2 Long Summary report, two types of data are presented for each APPLID:

1. The first is a single data line (in column format) for the CMF performance class data summarized by transaction and program
2. The second is a block of data lines (in row format) for the associated DB2 accounting data summarized by SSID and planname

The DB2 Long Summary report provides the following information:

CMF Performance based fields: A data line is presented for the CMF performance class data summarized by transaction and program.

APPLID
(In the report heading.) The APPLID of the CICS system where the CMF records were created.

Tran
Transaction ID (field: TRAN, owner: DFHTASK, field ID: 001).

Program
Initial Program Name (field: PGMNAME, owner: DFHPROG, field ID: 071).

#Tasks
The number of tasks summarized.

Each CMF-based line of the List report represents a CMF data record. For the purpose of accumulating for the Summary report, a record is considered to represent a task, that is, for each CMF performance record included in the Summary report, #Tasks increments by 1. Only records with DB2REQCT>0 are included.

For each of the following fields (except #Abends), two values are presented:
Average
The task average for the field.
Maximum
The maximum value of the field over the reporting period.

DB2ConWt Time
DB2 Connection Wait time; wait for DB2 subtask to become available.

DB2ThdWt Time
DB2 Ready Queue Wait time; wait for DB2 thread to become available.

DB2Rqst Count
DB2 Request Count (EXEC SQL and IFI).

UserCPU Time
CICS task CPU time (does not include DB2 CPU). This can be added to the Class1: Thread CPU Time to get a reasonable picture of the overall CPU utilization.

Response Time
Task response time.

#Abends
Total number of abends for the transaction in the reporting period.

DB2 accounting based fields: For each APPLID, a block of data lines is presented for the DB2 accounting records associated with the CMF performance records. This data is not present if **CMFONLY** is specified.

SSID
DB2 Subsystem ID (field: QWHSSSID). The values are filtered by the **SSID** operand.

Planname
Plan name (field: QWHCPLAN). Note that there might be multiple plans associated with a Tran/Program if Dynamic Plan Selection or Dynamic Plan Switching is used, or if an application is modified within the reporting period.

#Threads
The number of threads summarized where DB2 data has been included for the given plan.

This gives the total number of matched DB2 threads used (for this APPLID/transaction/program and SSID/plan) in the reporting period. For simple transactions with default performance monitoring and ACCOUNTREC(TASK), this total would be expected to be equal to the #Tasks.

Where a transaction has multiple UOWs however, the total number of threads used can be greater than the #Tasks, depending on thread reuse.

Thread Utilization
This data line is always present.

Entry The number of DB2Entry threads used in the reporting period.

Note: Transactions associated with a DB2Entry will generally run against a DB2Entry thread. However, it is possible for a transaction to overflow to a pool thread should the number of active DB2Entry threads reach the THREADLimit number defined for the DB2Entry.

Pool The number of Pool threads used in the reporting period.

Command
The number of Command threads used in the reporting period.

Note: Command threads are reserved by the CICS DB2 attachment facility for issuing commands to DB2 using the DSNC transaction. When the demand is great, commands overflow to the pool, and use a pool thread.

Any combination of the following DB2 data lines can be requested, or you can specify **ALL** to request all of them. If none are specified, the default is **CLASS1, CLASS2, BUFFER, LOCKING.** See the DB2 List report's "DB2 accounting based fields" on page 144 for an explanation of these DB2 data lines:

Class1: Thread Time
Specify **CLASS1** to request this line.

Class2: In-DB2 Time
Specify **CLASS2** to request this line.

Class3: Suspend Time
Specify **CLASS3** to request this line.

Buffer Manager Summary
Specify **BUFFER** to request this line.

Locking Summary
Specify **LOCKING** to request this line.

SQL DML Query/Update
Specify **DML1** to request this line.

SQL DML 'Other'
Specify **DML2** to request this line.

For each of the DB2 data lines, two values are presented:

Average
The thread average for the field.

Maximum
The maximum value of the field encountered for all threads within the reporting period. If **NOMAXLONGSUM** is specified, the maximum values are omitted from the report.

Total statistics are reported for each DB2 SSID and CICS APPLID.

Example: The following DB2 Long Summary report provides an example of Class 3 Suspend time.

```
V3R2M0                                                CICS Performance Analyzer
                                                          DB2 - Long Summary

DB2R0001 Printed at 12:03:45  3/15/2011    Data from 22:27:36  3/10/2010 to 22:27:36  3/10/2010    APPLID HMASW1A1     Page       1


                              Avg      Max       Avg      Max       Avg      Max       Avg      Max       Avg      Max
Tran/ Program/ #Tasks/   DB2ConWt DB2ConWt  DB2ThdWt DB2ThdWt   DB2Rqst  DB2Rqst   UserCPU  UserCPU  Response Response   #Abends
SSID  Planname #Threads      Time     Time      Time     Time     Count    Count      Time     Time      Time     Time

W001  MSHC301         1     .0000    .0000     .0000    .0000       4.0        4   .018432  .018432     .6679    .6679         0

DBH1  PWH0001         1  Thread Utilization       Entry=       1  Pool=       0  Command=       0
                         Class1: Thread Time      Avg: Elapsed=   .5509  CPU= .002450
                                                  Max: Elapsed=   .5509  CPU= .002450
                         Class2: In-DB2 Time      Avg: Elapsed=   .0145  CPU= .001930
                                                  Max: Elapsed=   .0145  CPU= .001930
                         Class3: Suspend Time     Avg: Total  = .003368  I/O= .003368  Lock/Latch= .000000  Other= .000000
                                                  Max: Total  = .003368  I/O= .003368  Lock/Latch= .000000  Other= .000000
                         Buffer Manager Summary   Avg: GtPgRq=    10.0  SyPgUp=     3.0
                                                  Max: GtPgRq=      10  SyPgUp=       3
```

Figure 68. DB2 Long Summary report showing Class 3 Suspend time

Short Summary report

The DB2 Short Summary report is an abridged version of the Long Summary Report. It provides a summary of DB2 activity by transaction and program within APPLID giving averages for each (no maximums).

The following command produces the default report like that shown in Figure 69. The default report is a Short Summary with both CMF performance records and DB2 Accounting records included. CMF performance records with DB2REQCT=0 are not included.

```
CICSPA DB2
```

or

```
CICSPA DB2(SHORTSUM)
```

```
 V3R2M0                                                CICS Performance Analyzer
                                                          DB2 - Short Summary

DB2R0001 Printed at 12:03:45  3/15/2011    Data from 15:41:19  7/12/2010 to 16:19:15  7/12/2010    APPLID CICPAOR1     Page       1

Tran/ Program/ #Tasks/  ............Average Elapsed Time............  .....Average CPU Time.....  .....Average Count....... #Abends
SSID  Planname #Threads Response  Thread   In-DB2  DB2ConWt DB2ThdWt    User    Thread   In-DB2   DB2Reqs  GetPage SysPgUpd

CRD7  CORD07P         2    .4043                    .0000    .0000   .031008                      3.0                         0
DB2P  CPAPLAN         2            .0631    .0106                             .011408  .009811              4.0       .0

CRD9  CORD09P         2    .4091                    .0000    .0000   .030680                      3.0                         0
DB2P  CPAPLAN         2            .0776    .0104                             .011478  .009870              4.0       .0

SALE  DFH0SAL2       10    .2271                    .0000    .0000   .038147                      1.0                         0
DB2P  CPAPLAN        10            .1394    .0033                             .003865  .003136              N/P      N/P

SAL1  DFH0SAL1        2   1.0268                    .0000    .0000   .038656                      1.0                         0
DB2P  CPAPLAN         2            .7898    .0033                             .003843  .003114              N/P      N/P

*** Total ***        16    .3720                    .0000    .0000   .036385                      1.5                         0
DB2P                 16            .2034    .0051                             .005757  .004809              4.0       .0
```

Figure 69. DB2 Short Summary report

In the DB2 Short Summary report, two lines of data are presented for each APPLID:

1. The first line is for the CMF performance class data summarized by transaction and program
2. The second line is for the associated DB2 accounting data summarized by SSID and planname

The DB2 Short Summary report contains the following information:

CMF Performance based fields:

APPLID
(In the report heading.) The APPLID of the CICS system where the CMF records were created.

Tran
Transaction ID (field: TRAN, owner: DFHTASK, field ID: 001).

Program
Initial Program Name (field: PGMNAME, owner: DFHPROG, field ID: 071).

#Tasks
The number of tasks summarized.

Average Elapsed Response Time
Average task response time.

Average Elapsed DB2ConWt Time
Average task DB2 Connection Wait time; wait for DB2 subtask to become available.

Average Elapsed DB2ThdWt Time
Average task DB2 Ready Queue Wait time; wait for DB2 thread to become available.

Average CPU Time: User
Average CICS task CPU time (does not include DB2 CPU).

Average Count: DB2Reqs
Average task DB2 Request Count (EXEC SQL and IFI).

#Abends
Total number of abends for the transaction in the reporting period.

DB2 accounting based fields:

SSID
DB2 Subsystem ID (field: QWHSSSID).

Planname
Plan name (field: QWHCPLAN). Note that there might be multiple plans associated with a Tran/Program if Dynamic Plan Selection or Dynamic Plan Switching is used, or if an application is modified within the reporting period.

#Threads
The number of threads summarized where DB2 data has been included for the given plan.

This gives the total number of matched DB2 threads used (for this APPLID/transaction/program and SSID/plan) in the reporting period. For simple transactions with default performance monitoring and ACCOUNTREC(TASK), this total would be expected to be equal to the #Tasks. Where a transaction has multiple UOWs however, the total number of threads used can be greater than the #Tasks, depending on thread reuse.

Average Elapsed Thread Time
Average elapsed time covered by the DB2 accounting period. included for the given plan.

Average Elapsed In-DB2 Time
Average In-DB2 elapsed time. This field is only available when Class 2 data is present.

Average CPU Time: Thread
Average CPU time accumulated for the CICS-DB2 thread.

Average CPU Time: In-DB2
Average In-DB2 CPU time used, derived from the accumulated TCB time. This field is only available when Class 2 data is present.

Average Count: GetPage
Average task Get Page request count.

Average Count: SysPgUpd
Average task system page (buffer) update count.

Total statistics are reported for each DB2 SSID and CICS APPLID.

Recap report

An example of the Recap report which is always printed at the end of processing is shown in Figure 70. This report provides statistics on the record processing and matching.

```
 V3R2M0                                          CICS Performance Analyzer
                                                       DB2 - Recap

DB2R0001 Printed at 12:03:45  3/15/2011    Data from 15:41:19  7/12/2010 to 16:19:15  7/12/2010                      Page       1

Records processed by the DB2 report processor:
                                                          Count     % of Total
  CMF performance class records:                        ---------   ----------
    Included  . . . . . . . . . . . . . . . . . . .         120        .6%
    Excluded:
      CICS PA record selection  . . . . . . . . . . .      20,670      99.4%
      No DB2 activity . . . . . . . . . . . . . . . .           0        .0%
      Other . . . . . . . . . . . . . . . . . . . . .           0        .0%
    Total . . . . . . . . . . . . . . . . . . . . . .      20,790

  DB2 accounting records:
    Included  . . . . . . . . . . . . . . . . . . .          30        .5%
    Excluded:
      CICS PA record selection  . . . . . . . . . . .           0        .0%
      Not CICS Attach . . . . . . . . . . . . . . . .         368       6.6%
      Accounting Token not set  . . . . . . . . . . .       5,196      92.9%
      Other . . . . . . . . . . . . . . . . . . . . .           0        .0%
    Total . . . . . . . . . . . . . . . . . . . . . .       5,594


Network units-of-work with DB2 activity:
                                                          Count    % of Total
  Network units-of-work where:                          ---------  ----------
    DB2 accounting records were resolved  . . . . . .          30     100.0%
    DB2 accounting records were not resolved  . . . .           0        .0%
    DB2 accounting records were not present . . . . .           0        .0%
    Total . . . . . . . . . . . . . . . . . . . . . .          30

  CMF performance class records with DB2 activity:
    Matched to a DB2 accounting record  . . . . . . .          30     100.0%
    Not matched to any DB2 accounting records . . . .           0        .0%
    Total . . . . . . . . . . . . . . . . . . . . . .          30

  CMF performance class records with no DB2 activity:
    Total . . . . . . . . . . . . . . . . . . . . . .           0

  DB2 accounting records:
    Eligible for summary reporting  . . . . . . . . .          30     100.0%
    Matched to a single CICS task   . . . . . . . . .          30     100.0%
    Matched to two or more CICS tasks . . . . . . . .           0        .0%
    Not matched to any CICS tasks . . . . . . . . . .           0        .0%
    Total . . . . . . . . . . . . . . . . . . . . . .          30
```

Figure 70. DB2 Recap report

The statistics reported are:

Records processed by the DB2 report processor: This section of the report indicates the effect of basic record selection, and the effect of the LISTZERO and CMFONLY report options in terms of the volume of sort data.

Also, if DB2 connection options ACCOUNTREC(TASK) or ACCOUNTREC(UOW) were not set, this is clearly evident by the number of DB2 accounting records that are excluded.

If no CMF performance data is selected for the report, only this section of the Recap report is produced.

CMF performance class records:
The results of CMF performance class record selection.

Included
The number of CMF performance class records from the input file selected for report processing, and subsequently passed to Sort.

Excluded
The number of CMF performance class records from the input file excluded from report processing for any of the following reasons:

1. They do not satisfy the Record Selection Criteria.
2. There was no DB2 activity. Using the report default, not-LISTZERO, CMF performance class records with DB2REQCT=0 are excluded. If only the Summary reports are requested, not-LISTZERO is assumed since the Summary reports only report on CMF performance class records with DB2REQCT>0.
3. Other reasons, such as missing required fields. See "Required CMF fields" on page 156 for a list of the fields that must be present in the CMF performance record.

Total
The total number of CMF performance class records passed to the DB2 record processor from the input file.

DB2 accounting records:
The results of DB2 accounting record selection.

Included
The number of DB2 accounting records from the input file selected for report processing, and subsequently passed to Sort (provided at least one CMF record was included).

Excluded
The number of DB2 accounting records from the input file excluded from report processing for any of the following reasons:

1. They do not satisfy the Record Selection Criteria.
2. They are not generated by 'CICS Attach'.
3. The accounting token in the Correlation Header is not set. The accounting token is only set if ACCOUNTREC(TASK) or ACCOUNTREC(UOW) is specified.
4. Other reasons, such as records from unsupported DB2 releases.

Total
The total number of DB2 accounting records passed to the DB2 record processor from the input file.

Network units-of-work with DB2 activity: This section of the report provides details on the results of CMF-DB2 record matching and therefore indicates the value of the Summary reports. This is performed for each network unit-of-work that has at least one CMF performance class record indicating DB2 activity (DB2REQCT>0).

The various CMF-DB2 matching statistics are marked **N/A** (not applicable) when no DB2 records are selected, so no record matching takes place (for example, when CMFONLY).

Network units-of-work where:
The results of CMF-DB2 record matching for network units-of-work with DB2 activity.

DB2 accounting records were resolved
The number of network units-of-work where CMF-DB2 record matching was able to fully resolve the relationship between the data records, and at least one DB2 accounting record was present.

DB2 accounting records were not resolved
The number of network units-of-work where CMF-DB2 record matching was *not* able to fully resolve the relationship between the data records, and at least one DB2 accounting record was present.

DB2 accounting records were not present
The number of network units-of-work where no DB2 accounting records were present.

Total
The total number of network units-of-work.

CMF performance class records with DB2 activity:
The results of CMF-DB2 record matching for the CMF performance class records with DB2 activity that are within network units-of-work with DB2 activity.

Matched to a DB2 accounting record
The number of CMF performance class records with DB2REQCT>0 that were able to be matched to a DB2 accounting record.

Not matched to any DB2 accounting records
The number of CMF performance class records with DB2REQCT>0 that were *not* able to be matched to any DB2 accounting records, that is, there is 'missing' DB2 accounting data.

Total
The total number of CMF performance class records with DB2REQCT>0.

Total CMF performance class records with no DB2 activity:
The total number of CMF performance class records with DB2REQCT=0.

When LISTZERO is specified (explicitly or implicitly because only Summary reports are requested), this count is marked **N/A** (not applicable) because *all* CMF performance class records with DB2REQCT=0 are excluded.

DB2 accounting records:
The results of CMF-DB2 record matching for the DB2 accounting records.

Eligible for summary reporting
The number of DB2 accounting records eligible for summary reporting. To

be eligible, a DB2 accounting record must have been matched to either a single CICS task, or multiple tasks which were all related to the same APPLID, transaction, and program.

Matched to a single CICS task
The number of DB2 accounting records matched to a single CICS task.

Matched to two or more CICS task
The number of DB2 accounting records matched to more than one CICS task. This can occur in a network unit-of-work that utilizes the DPL function.

Not matched to any CICS tasks
The number of DB2 accounting records that were not able to be matched to any CMF performance class records within the network unit-of-work, that is, there is 'missing' CMF data.

Total
The total number of DB2 accounting records.

Required CMF fields

If you are using the CICS Monitoring Control Table (MCT) Exclude/Include parameters to reduce the size of the performance class record, you must ensure that the data fields required for the DB2 report are not excluded.

The following table lists the fields that must be collected in the performance class records so they are eligible for the DB2 report.

Table 6. DB2 report: Required CMF fields

Owner	Field ID	CICS Informal Name	Description
DFHCICS	005	START	Store clock start time
DFHCICS	006	STOP	Store clock stop time
DFHCICS	089	USERID	User ID
DFHCICS	112	RTYPE	Record type
DFHDATA	180	DB2REQCT	DB2 request count
DFHDATA	187	DB2RDYQW	DB2 ready queue wait time
DFHDATA	188	DB2CONWT	DB2 connection wait time
DFHPROG	071	PGMNAME	Program name
DFHPROG	113	ABCODEO	Original abend code
DFHPROG	114	ABCODEC	Current abend code
DFHSYNC	060	SPSYNCCT	Syncpoint count for task
DFHTASK	001	TRAN	Transaction name
DFHTASK	008	USRCPUT	User CPU time
DFHTASK	031	TRANNUM	Transaction sequence number
DFHTASK	097	NETUOWPX	Network UOW - PX
DFHTASK	098	NETUOWSX	Network UOWID - SX
DFHTASK	164	TRANFLAG	Transaction flags

Table 6. DB2 report: Required CMF fields (continued)

Owner	Field ID	CICS Informal Name	Description
DFHTERM	002	TERM	Terminal ID
DFHTERM	111	LUNAME	LU name

How CICS PA builds the DB2 report

CICS PA processes CMF performance data from multiple CICS systems along with associated DB2 Accounting data, correlating the data by network unit-of-work. For each network unit-of-work with DB2 activity, CICS PA attempts to match each DB2 Accounting record to a CMF task.

In the DB2 List report, a data line is presented for each CMF performance class record (column format), and a block of data lines is presented for each associated DB2 Accounting record (row format). Records that are part of the same network unit-of-work are printed sequentially in groups separated by blank lines. A network unit-of-work will only be presented if it involved some DB2 activity, that is, at least one CMF record is present with DB2 Request Count greater than zero (DB2REQCT>0).

The DB2 List report is presented in the same sequence as the Cross-System Work report so you can correlate the two reports. Also, the printed information allows you to find the corresponding records in the CICS PA Performance List report and the DB2 PM reports.

Two summary reports (Long Summary and Short Summary) offer a summary of the CMF performance and DB2 Accounting data presented in the DB2 List report. The data is collated by APPLID, transaction and program for CMF data, and additionally by SSID and plan for DB2 data. Generally there is only one DB2 plan per APPLID/transaction/program combination, but it is possible for there to be more than one (via Dynamic Plan Switching), or for multiple plans to be used over time (via Dynamic Plan Selection, or system modification). Only DB2 Accounting data that matches a single CMF task is accumulated for the summary reports. There is no attempt to statistically apportion DB2 Accounting data that represents more than one CMF task.

The DB2 report is produced from the following process:

1. Record Selection. CMF performance records that are part of a network unit-of-work that involves DB2 activity are selected. Associated DB2 Accounting records are selected. See “CMF-DB2 record selection” on page 158.
2. Sort. The selected records are sorted using an EXTERNAL sort process. See “Sorting the CMF-DB2 records” on page 158.
3. Group by Network UOW. Records are grouped by network unit-of-work NETNAME and network unit-of-work ID.
4. Match CMF-DB2 Records within Network UOW. For each network unit-of-work, DB2 Accounting records are matched (where possible) to CMF tasks. See “Matching CMF-DB2 records for a Network UOW” on page 159.
5. Report/Summarize.
   - If requested, the DB2 List report is produced. For each network unit-of-work, one line is presented per CMF performance class record followed by the DB2 Accounting data for that network unit-of-work.
   - If requested, the DB2 Summary reports accumulate statistics for each APPLID, transaction, and program combination. Then the DB2 statistics are

accumulated for each SSID and plan used by the APPLID/transaction/program. The Summary reports are produced after the List report (if requested) is complete.

CMF-DB2 record selection

For the DB2 report, CMF record selection is the same as for all CMF Performance reports, with an additional criterion:

- **LISTZERO.** List CMF performance class records that do not involve DB2 activity (DB2REQCT=0) when they are part of a network unit-of-work that involves some DB2 activity.

DB2 accounting record selection is based on:

1. **CMFONLY.** Suppress DB2 record processing.
2. **SMFSTART, SMFSTOP.** Like the CMF performance records, filter the DB2 Accounting records based on the SMF time stamp.
3. **SELECT(PERFORMANCE.** INCLUDE or EXCLUDE DB2 Accounting records based on whether the DB2 thread Begin-End times are within the specified FROM-TO report intervals. Also you can filter the DB2 Accounting records based on UOWID field values.
4. **APPLID.** Select by CICS generic APPLID.
5. **SSID.** Select by DB2 Subsystem ID.

Note: DB2 end time can be after CMF stop time if thread protection is in place. Consequently, if you specify SMFSTOP when protected threads are in use, it is possible that DB2 Accounting records are excluded that relate to CMF records that are included. In normal circumstances, 5 minutes (the initial DB2 thread PURGECYCLE delay after CICS startup) is expected to be the longest period an inactive DB2 thread is present before it is terminated by a PURGECYCLE. To allow for this, you should specify the SMFSTOP time at least 5 minutes after the ‘required stop time' specified in the FROM/TO report interval in the SELECT statement.

Sorting the CMF-DB2 records

The DB2 report is produced using an external SORT facility. An External Work data set is required to store the records before they are sorted. This data set is either specified explicitly using **EXTERNAL(ddname),** or CICS PA assigns one from the External Work File pool.

The records are sorted in the following order (the same as that used in the Cross-System Work report):

1. Network unit-of-work NETNAME
2. Network unit-of-work ID
3. Syncpoint count concatenated with the task stop time in reverse (descending) order
4. APPLID

Note: The syncpoint count is used to resolve unsynchronized STORE CLOCK (STCK) values between systems. The syncpoint count and stop time, sorted in reverse (descending) order, shows the sequence of tasks within the network unit-of-work. In some cases (for example, where user event monitor points (EMPs) are used), the syncpoint count does not reflect the sequence of events within a network unit-of-work. For these instances, all the task records are printed, but not necessarily in the order they happened. You can tell that this situation exists if the stop times are not in descending order.

For more information on correlating the performance class data by network unit-of-work ID, see “Correlating performance class data” on page 325.

For DB2 records:

- Network unit-of-work NETNAME and ID are derived from the Accounting Token (field: QWHCTOKN).
- Syncpoint count and task stop time are not applicable. Thread ID and DB2 Begin time (in ascending order) are used.
- APPLID is the CICS generic APPLID taken from the Connection Name (field: QWHCACCN).

Considerations for processing efficiency:

1. If **LISTZERO** is specified, CMF records without DB2 activity are passed to the sort as they might be part of a network unit-of-work that involved DB2 activity. Use of this option can dramatically *increase* the volume of sort data. This option is only applicable to the DB2 List report.
2. If **CMFONLY** is specified, only CMF performance records are processed. Use of this option can dramatically *reduce* the volume of sort data as all DB2 Accounting records are excluded.

Matching CMF-DB2 records for a Network UOW

For each network unit-of-work with DB2 activity, CICS PA attempts to match each DB2 Accounting record to a CMF task.

The CICS-DB2 record relationship is usually one-to-one. However, it is possible that one DB2 thread serviced more than one CICS task. Conversely, it is possible that a single CICS task was associated with multiple DB2 threads (since threads are released at syncpoint). Also, with ACCOUNTREC(TASK), it is possible to get a network unit-of-work where the CMF-DB2 records cannot be correlated because the information available in the data records is insufficient.

DB2 Accounting data is accumulated for the Summary reports only if:

- It matches a single CMF task, or
- It matches multiple CMF tasks with the same APPLID/transaction/program, as the thread statistics are not apportioned in this case.

WebSphere MQ report

The WebSphere MQ report processes WebSphere MQ SMF accounting (SMF 116) records to produce a detailed view of WebSphere MQ usage by your CICS systems.

The WebSphere MQ List reports display, depending on the WebSphere MQ accounting traces that are active, details about Transactions, WebSphere MQ Queues that were referenced, WebSphere MQ global (not Transaction-specific or Queue-specific) statistics and WebSphere Queue-specific commands issued by Transactions. These can be sorted and aggregated by any one of the following:

- Transaction ID
- Queue name
- Transaction ID, then Queue name
- Queue name, then Transaction ID

WebSphere MQ accounting traces

WebSphere MQ accounting records are produced when the Accounting Trace component of WebSphere MQ is activated. If the MQ accounting trace is active, CLASS(1) subtype 0 records are always produced, but subtypes 1 and 2 are only produced if CLASS(3) is specified when the trace is activated.

Report command

The WebSphere MQ report can be requested from a Report Set in the CICS PA dialog. Select the **WebSphere MQ** report in the **Subsystem Reports** category.

In batch, the `MQ` command is used to request the WebSphere MQ report.

The command to produce the default report, a Class 1 Summary report, is:

```
CICSPA MQ
```

or

```
CICSPA MQ(SUMMARY,CLASS1)
```

To produce a Class 3 Summary report:

```
CICSPA MQ(SUMMARY,CLASS3)
```

To produce a Class 1 List report:

```
CICSPA MQ(LIST,CLASS1)
```

To produce a Class 3 List report:

```
CICSPA MQ(LIST,CLASS3)
```

To tailor the report, you can specify report options as follows:

```
CICSPA MQ(
         [OUTPUT(ddname),]
         [LIST,]
         [SUMMARY,]
         [CLASS1,]
         [CLASS3,]
         [SORT([TRAN,][QUEUE]),]
         [QNAME(name),]
         [SSID(id1,id2,...),]
         [LINECount(nnn),]
```

```
[TITLE1('...sub-heading left ...'),]
[TITLE2('...sub-heading right...'),]
[SELECT(PERFORMANCE(INCLUDE|EXCLUDE(field1(values1),...),
                    ...))])
```

Note: MQ accounting records do not have a time zone conversion factor. CICS PA uses the reporting system's time zone to convert the MQ time stamps to local time. However, when you run the WebSphere MQ report on a system with a different time zone setting to that of the SMF data, you will need to specify the **ZONE** operand to match the time zone of the SMF data.

MQ record selection

The report processes MQ accounting (SMF 116) records. You can request a report from all available records, or you can specify one or more of the following filtering commands to select only the records of interest:

- Specify QNAME to select records for a particular WebSphere MQ queue name. You can specify a pattern such as CICSMQ* to include more than one queue name. The queue name is case-sensitive.
- Specify SSID to identify the WebSphere MQ subsystems that you want to report against. A Subsystem ID is up to 4 characters. Masking characters are allowed.
- Specify SELECT statements to include or exclude records based on time and field values. The fields that can be specified in Selection Criteria are:
  START
  STOP
  ACTIVE
  TRAN (owner: DFHTASK, field ID: 001)
  TASKNO (owner: DFHTASK, field ID: 031)

You can also specify the global APPLID operand to filter on CICS APPLID:

```
CICSPA APPLID(applid1,applid2,...)
```

Report content MQ Class 1

You can request one or both of the following reports for WebSphere MQ Class 1 data:

1. “WebSphere MQ Class 1 List report”
2. “WebSphere MQ Class 1 Summary report” on page 163

The Class 1 reports extract information from Subtype 0 MQ accounting records (SMF 116).

The reports consist of 2 sections:

1. Task identification.
   - SSID – extracted from the Instrumentation Standard Header Data (macro CSQDQWHS)
   - APPLID, Tran, Task – extracted from the Instrumentation Correlation Data (macro CSQDQWHC)
2. Summary statistics.
   - CPU and Call count statistics – extracted from the Message Manager Accounting Data (macro CSQDQMAC)

WebSphere MQ Class 1 List report

The WebSphere MQ Class 1 List report provides a detailed list of MQ accounting class 1 records.

The following command produces a Class 1 List report like that in Figure 71

```
CICSPA MQ(LIST,CLASS1)
```

```
V3R2M0                                                CICS Performance Analyzer
                                                      Websphere MQ Class 1 List

MQ000001 Printed at 12:03:45  3/15/2011  Data from 14:50:34 07/13/2010


SSID  APPLID  Tran  Time         Task           CPU  -------------- GET Counts ------------- ------------- PUTx Counts -------------
                                                          <=99     <=999    <=9999   >=10000      <=99     <=999    <=9999   >=10000

MQMD CICS53A1 CKCN  14:50:34.88      35    0.000747          0         0         0         0         0         0         0         0
MQMD CICS53A1 MQA1  14:51:13.27      41    0.064342          0         0         0         0        60         0         0         0
MQMD CICS53A1 CKTI  14:51:24.52      37    0.001541          0         0         0         0         0         0         0         0
```

Figure 71. WebSphere MQ Class 1 List report

The WebSphere MQ Class 1 List report contains information in two sections:

1. Task identification
2. Summary statistics

Section 1 Task identification:

SSID
Subsystem name (field: QWHSSSID).

APPLID
Network identifier (field: QWHCNID).

Tran
CICS Transaction ID, extracted from the MQ Correlation ID (field: QWHCCV).

Time
SMF record time stamp.

Task
CICS Task number, extracted from the MQ Correlation ID (field: QWHCCV).

Section 2 Summary statistics:

CPU
CPU Time used (field: QMACCPUT).

GET Counts

<=99 Number of GET calls for length 0-99 bytes (field: QMACGETA).

<=999 Number of GET calls for length 100-999 bytes (field: QMACGETB).

<=9999
Number of GET calls for length 1000-9999 bytes (field: QMACGETC).

>=10000
Number of GET calls for length 10000 bytes or more (field: QMACGETD).

PUTx Counts

<=99 Number of PUT and PUT1 calls for length 0-99 bytes (field: QMACPUTA).

<=999 Number of PUT and PUT1 calls for length 100-999 bytes (field: QMACPUTB).

<=9999
Number of PUT and PUT1 calls for length 1000-9999 bytes (field: QMACPUTC).

>=10000
Number of PUT and PUT1 calls for length 10000 bytes or more (field: QMACPUTD).

WebSphere MQ Class 1 Summary report

The WebSphere MQ Class 1 Summary report provides a summary of MQ accounting class 1 records.

The following command produces a Class 1 Summary report like that in Figure 72

```
CICSPA MQ(SUMMARY,CLASS1)
```

```
V3R2M0                                                CICS Performance Analyzer
                                                    Websphere MQ Class 1 Summary

MQ000003 Printed at 12:03:45  3/15/2011  Data from 14:50:34 07/13/2010 to 14:51:24 07/13/2010                      Page       1


                              ----- Average -----  --------- Average GET Counts ---------   -------- Average PUTx Counts ---------
SSID  APPLID    TRAN     Count        CPU     Calls      <=99     <=999    <=9999   >=10000       <=99     <=999    <=9999   >=10000

MQMD  CICS53A1  CKCN         1   0.000747       0.0       0.0       0.0       0.0       0.0        0.0       0.0       0.0       0.0
MQMD  CICS53A1  CKTI         1   0.001541       0.0       0.0       0.0       0.0       0.0        0.0       0.0       0.0       0.0
MQMD  CICS53A1  MQA1         1   0.064342      60.0       0.0       0.0       0.0       0.0       60.0       0.0       0.0       0.0
```

Figure 72. WebSphere MQ Class 1 Summary report

The WebSphere MQ Class 1 Summary report contains information in two sections:
1. Task identification
2. Summary statistics

Section 1 Task identification:

SSID
Subsystem Name (field: QWHSSSID).

APPLID
Network identifier (field: QWHCNID).

Tran
CICS Transaction ID, extracted from the MQ Correlation ID (field: QWHCCV).

Section 2 Summary statistics:

Count
Total number of transactions.

Average CPU
Average CPU time per thread (field: QMACCPT/Number of threads).

Average Calls
Average GET/PUT calls (field: QMACGET(A,B,C,D)+QMACPUT(A,B,C,D)/ Number of threads).

Average GET Counts

<=99 Average number of GET calls for length 0-99 bytes per thread (QMACGETA/Number of threads).

<=999 Average number of GET calls for length 100-999 bytes per thread (QMACGETB/Number of threads).

<=9999
Average number of GET calls for length 1000-9999 bytes per thread (QMACGETC/Number of threads).

>=10000
Average number of GET calls for length 10000 or more bytes per thread (QMACGETD/Number of threads).

Average PUTx Counts

<=99 Average number of PUT and PUT1 calls for length 0-99 bytes per thread (QMACPUTA/Number of threads).

<=999 Average number of PUT and PUT1 calls for length 100-999 bytes per thread (QMACPUTB/Number of threads).

<=9999
Average number of PUT and PUT1 calls for length 1000-9999 bytes per thread (QMACPUTC/Number of threads).

>=10000
Average number of PUT and PUT1 calls for length 10000 or more bytes per thread (QMACPUTD/Number of threads).

Report content MQ Class 3

You can request one or both of the following reports for WebSphere MQ Class 3 data:
1. "WebSphere MQ Class 3 List report" on page 165
2. "WebSphere MQ Class 3 Summary report" on page 170

The Class 3 reports extract information from Subtypes 1 and 2 MQ accounting records (SMF 116).

The reports consist of 5 sections:
1. Task Identification.
   - SSID – extracted from the Instrumentation Standard Header Data (macro CSQDQWHS)
   - APPLID, Tran, Task – extracted from the Instrumentation Correlation Data (macro CSQDQWHC)
   - Userid, Netname, NETUOW, Channel, Channel Connection – extracted from the Task Identification Block (macro CSQDWTID)
2. Task related statistics.
   - Commit, Backout, Journal and Logging, Page Set 00 logging, DB2 Manager, CF Manager and 'Other' statistics – extracted from the Task related statistics (macro CSQDWTAS)
3. Queue identification.
   - Queue name, type and other identifiers – extracted from the Identification section at the start of the Queue Statistics (macro CSQDWQ)
4. Queue call statistics.
   - OPEN, CLOSE, GET, PUT, PUT1, INQ, SET and OTHER statistics – extracted from the Queue Statistics (macro CSQDWQ)
5. Queue Get/Put summary.
   - Additional summary information about GET and PUT calls – extracted from the end of the Queue Statistics (macro CSQDWQ)

WebSphere MQ Class 3 List report

The WebSphere MQ Class 3 List report provides a detailed list of MQ accounting class 3 records.

The following command produces a Class 3 List report like that in Figure 73

```
CICSPA MQ(LIST,CLASS3)
```

```
V3R2M0                                                CICS Performance Analyzer
                                                      WebSphere MQ Class 3 List

MQ000002 Printed at 12:03:45  3/15/2011  Data from 09:54:55  2/20/2010

SSID: MQMD APPLID: CICS53A1 Tran: MQAK  Task:     38  UserID: CICSUSER  NetName: N/A              UOWID: N/A
Channel:                     Channel Connection:                                                  Start:  2/20/2010 09:54:51.76

  Other    Total Calls           1  Avg Elapsed   0.000470   Avg CPU      0.000170
           #Old Pages          127  #New Pages           2

  Queue: CPPX.MQS520.TEST.TEMPQUEUE.070
  QType: LOCAL    IType: NONE       GDisp: Q_MGR    Date:  2/20/2010  Time: 09:54:51  P/Set No:        0  BufferPool No:        0
  First Opened:  2/20/2010 09:49:51.09   Last Closed:  2/20/2010 09:54:55.35   CF Structure Name:

                Count     Elapsed      CPU      Susp Elp  JnlWrt Elp   PS Req's  PS Rd Elp   Expired   Page Skip  Msgs Skip
               ________  ________  ________  ________  __________  ________  ________  ________  ________  ________
    CLOSE            1   0.000132   0.000131
    GET              1   0.000241   0.000236   0.000000    0.000000        0.0   0.000000        0.0        0.0        0.0
     DES ANY         1

    GET      Total Bytes           0  #GET w/Data             0  Min Msg Size        10  Max Msg Siz         20

SSID: MQMD APPLID: CICS53A1 Tran: CKTI  Task:     34  UserID: CICSUSER  NetName: N/A              UOWID: N/A
Channel:                     Channel Connection:                                                  Start:  2/20/2010 09:52:51.17

  Other    Total Calls           1  Avg Elapsed   0.000716   Avg CPU      0.000396

  Queue: CICSA1.INITQ
  QType: LOCAL    IType: NONE       GDisp: Q_MGR    Date:  2/20/2010  Time: 09:52:51  P/Set No:        0  BufferPool No:        0
  First Opened:  2/20/2010 09:49:42.03   Last Closed:  2/20/2010 09:59:20.63   CF Structure Name:
```

Figure 73. WebSphere MQ Class 3 List report

The WebSphere MQ Class 3 List report contains information in five sections:

1. Task identification
2. Task related statistics
3. Queue identification
4. Queue call statistics
5. Queue Get/Put summary

Section 1 Task identification:

```
SSID: MQMD APPLID: CICS53A1 Tran: MQAK  Task:     38  UserID: CICSUSER  NetName: N/A              UOWID: N/A
Channel:                     Channel Connection:                                                  Start:  2/20/2010 09:54:51.76
```

SSID
Subsystem Name (field: QWHSSSID).

APPLID
Network Identifier for RRS connections (field: WTIDNID).

Tran
CICS Transaction ID, extracted from the MQ Correlation ID (field: QWHCCV).

Task
CICS Task number, extracted from the MQ Correlation ID (field: QWHCCV).

UserID
User (or Operator) ID (field: WTIDOPID).

NetName
Network name, extracted from the MQ Accounting Token (field: WTIDACCT).

UOWID
Network Unit of Work ID, extracted from the MQ Accounting Token (field: WTIDACCT).

Channel
Channel name for MVS mover (field: WTIDCHL).

Channel Connection
Long connection name for MVS mover (field: WTIDCHLC).

Start
MQ thread start time stamp.

Section 2 Task related statistics:

```
Other    Total Calls          1  Avg Elapsed   0.000470   Avg CPU      0.000170
         #Old Pages         127  #New Pages          2
```

Commit

Count Number of Commit requests (field: WTASCMN).

Avg Elapsed
Average Commit elapsed time (field: WTASCMET/WTASCMN).

Avg CPU
Average Commit CPU time (field: WTASCMCT/WTASCMN).

Backout

Count Number of Backout calls (field: WTASBAN).

Avg Elapsed
Average Backout elapsed time (field: WTASBAET/WTASBAN).

Avg CPU
Average Backout CPU time (field: WTASBACT/WTASBAN).

P/S 0
Page Set 00 logging activity

Count Number of logging requests (field: WTASPSN0).

Avg Elapsed
Average logging request elapsed time (WTASPSE0/WTASPSN0).

Latch

Count Max
Maximum number of times a latch wait occurred (field: WTASLWN).

Elapsed Max
Average maximum latch wait time (field: WTASMLW/WTASLWN).

Other
Non-queue other statistics.

Total Calls
Total number of 'Other' calls (field: WTASOTN).

Av Elapsed
Average elapsed time per 'Other' call (field: WTASOTET/WTASOTN).

Av CPU
Average CPU time per 'Other' call (field: WTASOTCT/WTASOTN).

#Old Pages
Number of old pages retrieved (field: WTASGPO).

#New Pages
Number of new pages retrieved (field: WTASGPN).

Jnl/Log

Bytes Total number of bytes written to the Journal (field: WTASJWB).

FORCEs
Total number of times the log was forced (field: WTASJCN).

Avg WAIT Elp
Average elapsed time waiting for the log to be forced (field: WTASJCET/WTASJCN).

Avg SUSPEND Elp
Average suspend time (field: WTASSUSE/WTASJCN).

DB2 Mgr

Requests
Total number of DB2 calls (field: WTASDBCT).

Avg Jnl/Log Thread Elapsed
Average elapsed time per DB2 call (field: WTASDBET/WTASDBCT).

Avg Jnl/Log Server Elapsed
Average server elapsed time per DB2 call (field: WTASDBES/WTASDBCT).

Jnl/Log Thd Elp (Max)
Maximum DB2 thread elapsed time (field: WTASDBMT).

Jnl/Log Svr Elp (Max)
Maximum DB2 server elapsed time (field: WTASDBMS).

Section 3 Queue identification:

```
Queue: CPPX.MQS520.TEST.TEMPQUEUE.070
QType: LOCAL    IType: NONE       GDisp: Q_MGR    Date:  2/20/2010  Time: 09:54:51  P/Set No:        0  BufferPool No:        0
First Opened:  2/20/2010 09:49:51.09   Last Closed:  2/20/2010 09:54:55.35   CF Structure Name:
```

Queue
Queue name as specified in OD of MQOPEN request (field: OBJNAME).

QType
Type of queue (field: QTYPE).

IType Index type of queue (field: INDXTYPE).

GDisp
Queue-sharing-Group disposition (field: QSGDISP).

Date Date from the SMF record time stamp.

Time Time from the SMF record time stamp.

P/Set No
Page Set number (field: NPS).

Bufferpool No
Buffer pool number (field: NBUFFPOOL).

First Opened
Time queue was first opened (field: OPENTIME).

Last Closed
Time queue was last closed (field: CLOSTIME).

CF Structure Name
Coupling Facility structure name (field: CFSTRUCNAME).

Section 4 Queue call statistics:

	Count	Elapsed	CPU	Susp Elp	JnlWrt Elp	PS Req's	PS Rd Elp	Expired	Page Skip	Msgs Skip
CLOSE	1	0.000132	0.000131							
GET	1	0.000241	0.000236	0.000000	0.000000	0.0	0.000000	0.0	0.0	0.0
DES ANY	1									

OPEN

Count Total number of OPEN calls (field: OPENN).

Elapsed
Average elapsed time per OPEN call (field: OPENET/OPENN).

CPU Average CPU time per OPEN call (field: OPENCT/OPENN).

CLOSE

Count Total number of CLOSE calls (field: CLOSEN).

Elapsed
Average elapsed time per CLOSE call (field: CLOSECT/CLOSEN).

CPU Average CPU time per CLOSE call (field: CLOSEET/CLOSEN).

GET

Count Total number of GET calls (field: GETN). This is broken down by the type of GET call:
DES ANY
Destructive GET ANY
DES SPE
Destructive GET SPECIFIC
BRW ANY
BROWSE ANY
BRW SPE
BROWSE SPECIFIC

Elapsed
Average elapsed time per GET call (field: GETET/GETN).

CPU Average CPU time per GET call (field: GETCT/GETN).

Susp Elap
Average suspend time per GET call (field: GETSUSET/GETN).

JnlWrt Elp
Average elapsed time waiting for a journal write per GET call (field: GETJWET/GETN).

PS Req's
Average number of reads from a Page Set per GET call (field: GETPSN/GETN).

PS RD Elp
Average elapsed time waiting for a read from a Page Set per GET call (field: GETPSET/GETN).

Expired
Average number of expired messages (field: GETEXMSG/GETN).

Page Skip
Average number of pages skipped processing a GET (field: GETEPAGE/GETN).

Msgs Skip
Average number of messages skipped processing a GET (field: GETSMSG/GETN).

PUT

Count Total number of PUT calls (field: PUTN)

Elapsed
Average elapsed time per PUT call (field: PUTET/PUTN).

CPU Average CPU time per PUT call (field: PUTCT/PUTN).

Susp Elap
Average suspend time per PUT call (field: PUTSUSET/PUTN).

JnlWrt Elp
Average elapsed time waiting for a journal write per PUT call (field: PUTJWET/PUTN).

PS Req's
Average number of PUT calls from a Page Set per PUT call (field: PUTPSN/PUTN)

PS RD Elp
Average elapsed time waiting for a read from a Page Set per PUT call (field: PUTPSET/PUTN).

PUT1

Count Total number of PUT1 calls (field: PUT1N).

Elapsed
Average elapsed time per PUT1 call (field: PUT1ET/PUT1N).

CPU Average CPU time per PUT1 call (field: PUT1CT/PUT1N).

Susp Elap
Average suspend time per PUT1 call (field: PUT1SUSET/PUT1N).

JnlWrt Elp
Average elapsed time waiting for a Journal write per PUT1 call (field: PUT1JWET/PUT1N).

PS Req's
Average number of PUT1 calls from a Page Set per PUT1 call (field: PUT1PSN/PUT1N).

PS RD Elp
Average elapsed time waiting for a read from a Page Set per PUT1 call (field: PUT1PSET/PUT1N).

INQ

Count Total number of INQ calls (field: INQN).

Elapsed
Average elapsed time per INQ call (field: INQET/INQN).

CPU Average CPU time per INQ call (field: INQCT/INQN).

SET

Count Total number of SET calls (field: SETN).

Elapsed
Average elapsed time per SET call (field: SETET/SETN).

CPU Average CPU time per SET call (field: SETCT/SETN).

Section 5 Queue Get/Put summary:

```
GET     Total Bytes          0  #GET w/Data            0  Min Msg Size       10  Max Msg Siz        20
```

GET

Total Bytes
Total number of data bytes read during MQGET (field: GETBYTES).

#GET w/Data
Total number of successful GET calls (field: VALIDGET).

Min Msg Size
Minimum message size retrieved by GET calls (field: GETMINMS).

Max Msg Size
Maximum message size retrieved by GET calls (field: GETMAXMS).

PUT

Total Bytes
Total number of data bytes written during PUT1 (field: PUTBYTES).

#GET w/Data
Total number of successful PUT calls (field: VALIDPUT).

Min Msg Size
Minimum message size retrieved by PUT calls (field: PUTMINMS).

Max Msg Size
Maximum message size retrieved by PUT calls (field: PUTMAXMS).

WebSphere MQ Class 3 Summary report

The WebSphere MQ Class 3 Summary report provides a summary of MQ accounting class 3 records.

You can request 4 sort options to summarize data in the required sequence: TRAN, QUEUE, TRAN/QUEUE (Queues referenced by a Transaction) and QUEUE/TRAN (Transactions that reference a Queue).

In all cases, the report is divided into two sections:

1. A static header section.
2. A variable length information section. In the variable section, data lines are omitted if they have no activity against them (typically, the count value is zero).

The following command produces a Class 3 Summary report (sorted by Transaction ID) like that in Figure 74

```
CICSPA MQ(SUMMARY,CLASS3,SORT(TRAN))
```

```
 V3R2M0                                                CICS Performance Analyzer
                                                 WebSphere MQ Class 3 Summary     (By TRAN)

MQ000004 Printed at 12:03:45  3/15/2011  Data from 14:50:34 07/13/2010 to 14:51:24 07/13/2010


SSID: MQMD  APPLID: CICS53A1  Tran: CKTI  Threads:         1
  Other     Avg Count               1.0   Avg Elapsed    0.000895  Avg CPU      0.000370

SSID: MQMD  APPLID: CICS53A1  Tran: MQA1  Threads:         1
  Other     Avg Count               1.0   Avg Elapsed    0.018721  Avg CPU      0.000258
            Avg #Old Pages        120.0   Avg #New Pages      0.0
```

Figure 74. WebSphere MQ Class 3 Summary report (by TRAN)

The following command produces a Class 3 Summary report (sorted by Queue name) like that in Figure 75

```
CICSPA MQ(SUMMARY,CLASS3,SORT(QUEUE))
```

```
 V3R2M0                                                CICS Performance Analyzer
                                                 WebSphere MQ Class 3 Summary     (By QUEUE)

MQ000005 Printed at 12:03:45  3/15/2011  Data from 14:50:34 07/13/2010 to 14:51:24 07/13/2010


Queue: CPPX.MQS520.TEST.TEMPQUEUE.001
QType: LOCAL    IType: NONE       GDisp: Q_MGR    QCount:         1

             Count     Elapsed      CPU      Susp Elp  JnlWrt Elp   PS Req's  PS Rd Elp   Expired   Page Skip  Msgs Skip
            ________  _________  _________  ________  __________  _________  ________  ________  _________  ________
  OPEN           1.0   0.000480   0.000472
  CLOSE          1.0   0.000122   0.000121
  PUT            1.0   0.000657   0.000562   0.000000    0.000000        0.0   0.000000        0.0        0.0        0.0

  PUT      Avg Bytes          10.0  Avg #PUT w/Data      1.0   Min Msg Size        10  Max Msg Size        10

Queue: CPPX.MQS520.TEST.TEMPQUEUE.002
QType: LOCAL    IType: NONE       GDisp: Q_MGR    QCount:         1

             Count     Elapsed      CPU      Susp Elp  JnlWrt Elp   PS Req's  PS Rd Elp   Expired   Page Skip  Msgs Skip
            ________  _________  _________  ________  __________  _________  ________  ________  _________  ________
  OPEN           1.0   0.000274   0.000270
  CLOSE          1.0   0.000053   0.000052
  PUT            1.0   0.000489   0.000484   0.000000    0.000000        0.0   0.000000        0.0        0.0        0.0

  PUT      Avg Bytes          10.0  Avg #PUT w/Data      1.0   Min Msg Size        10  Max Msg Size        10
```

Figure 75. WebSphere MQ Class 3 Summary report (by QUEUE)

The following command produces a Class 3 Summary report (sorted by Transaction ID, then Queue name) like that in Figure 76 on page 172

```
CICSPA MQ(SUMMARY,CLASS3,SORT(TRAN,QUEUE))
```

```
 V3R2M0                                                CICS Performance Analyzer
                                          WebSphere MQ Class 3 Summary     (By TRAN,QUEUE)

MQ000006 Printed at 12:03:45  3/15/2011  Data from 14:50:34 07/13/2010 to 14:51:24 07/13/2010


SSID: MQMD  APPLID: CICS53A1  Tran: CKTI  Threads:         1
  Other     Avg Count               1.0   Avg Elapsed    0.000895  Avg CPU      0.000370

SSID: MQMD  APPLID: CICS53A1  Tran: MQA1  Threads:         1
  Other     Avg Count               1.0   Avg Elapsed    0.018721  Avg CPU      0.000258
            Avg #Old Pages        120.0   Avg #New Pages      0.0

  Queue: CPPX.MQS520.TEST.TEMPQUEUE.001
  QType: LOCAL    IType: NONE       GDisp: Q_MGR    QCount:         1

                Count     Elapsed      CPU      Susp Elp  JnlWrt Elp   PS Req's  PS Rd Elp   Expired   Page Skip  Msgs Skip
               ________  ________  ________  _________  __________  _________  _________  _________  _________  _________
    OPEN           1.0   0.000480   0.000472
    CLOSE          1.0   0.000122   0.000121
    PUT            1.0   0.000657   0.000562   0.000000    0.000000        0.0   0.000000        0.0        0.0        0.0

    PUT      Avg Bytes          10.0  Avg #PUT w/Data      1.0   Min Msg Size        10  Max Msg Size        10
```

Figure 76. WebSphere MQ Class 3 Summary report (by TRAN,QUEUE)

The following command produces a Class 3 Summary report (sorted by Queue name, then Transaction ID) like that in Figure 77

```
CICSPA MQ(SUMMARY,CLASS3,SORT(QUEUE,TRAN))
```

```
 V3R2M0                                                CICS Performance Analyzer
                                          WebSphere MQ Class 3 Summary     (By QUEUE,TRAN)
MQ000007 Printed at 12:03:45  3/15/2011  Data from 14:50:34 07/13/2010 to 14:51:24 07/13/2010

Queue: CPPX.MQS520.TEST.TEMPQUEUE.023
QType: LOCAL    IType: NONE       GDisp: Q_MGR    QCount:         1

             Count     Elapsed      CPU      Susp Elp  JnlWrt Elp   PS Req's  PS Rd Elp   Expired   Page Skip  Msgs Skip
            ________  ________  ________  _________  __________  _________  _________  _________  _________  _________
  OPEN           1.0   0.000272   0.000267
  CLOSE          1.0   0.000114   0.000113
  PUT            1.0   0.000502   0.000495   0.000000    0.000000        0.0   0.000000        0.0        0.0        0.0

  PUT      Avg Bytes          10.0  Avg #PUT w/Data      1.0   Min Msg Size        10  Max Msg Size        10

  SSID: MQMD  APPLID: CICS53A1  Tran: MQA1  Threads:         1
    Other     Avg Count               1.0   Avg Elapsed    0.018721  Avg CPU      0.000258
              Avg #Old Pages        120.0   Avg #New Pages      0.0
```

Figure 77. WebSphere MQ Class 3 Summary report (by QUEUE,TRAN)

The WebSphere MQ Class 3 Summary report contains information in five sections:

1. Task identification
2. Task related statistics
3. Queue identification
4. Queue call statistics
5. Queue Get/Put summary

Section 1 Task identification:

```
  SSID: MQMD  APPLID: CICS53A1  Tran: MQA1  Threads:         1
```

SSID
Subsystem name (field: QWHSSSID).

APPLID
Network identifier (field: QWHCNID).

Tran
CICS Transaction ID, extracted from the MQ Correlation ID (field: QWHCCV).

Threads
Thread count (field: QWHCCV). The number of MQ accounting records for this SSID/APPLID/TRAN key.

Section 2 Task related statistics:

```
Other     Avg Count              1.0   Avg Elapsed    0.018721  Avg CPU      0.000258
          Avg #Old Pages       120.0   Avg #New Pages      0.0
```

Commit

Count Average Commit requests per thread (field: WTASCMN/Number of threads).

Avg Elapsed
Average Commit elapsed time per thread (field: WTASCMET/Number of threads).

Avg CPU
Average Commit CPU time per thread (field: WTASCMCT/Number of threads).

Backout

Count Average Backout calls per thread (field: WTASBAN/Number of threads).

Avg Elapsed
Average Backout elapsed time per thread (field: WTASCBAET/Number of threads).

Avg CPU
Average Backout CPU time per thread (field: WTASCBACT/Number of threads).

P/S 0
Page Set 00 logging activity.

Count Average number of P/S 0 logging requests per thread (field: WTASPSN0/Number of threads).

Avg Elapsed
Average P/S 0 logging elapsed time per thread (field: WTASPSE0/Number of threads).

Latch

Count Max
The highest latch class for which the longest waiting elapsed time occurred.

Elapsed Max
Average elapsed time processing commit requests per thread (field: WTASCMET/Number of threads).

Other
Non-queue other statistics.

Total Calls
Average number of 'Other' calls per thread (field: WTASOTN/Number of threads).

Av Elapsed
Average 'Other' calls elapsed time per thread (field: WTASOTET/Number of threads).

Av CPU
Average 'Other' calls CPU time per thread (field: WTASOTCT/Number of threads).

#Old Pages
Average number of old pages retrieved per thread (field: WTASGPO/Number of threads).

#New Pages
Average number of new pages retrieved per thread (field: WTASGPN/Number of threads).

Jnl/Log

Bytes Average number of bytes written to the Journal per thread (field: WTASJWB/Number of threads).

FORCEs
Average number of times the log was forced per thread (field: WTASJCN/Number of threads).

Avg WAIT Elp
Average elapsed time waiting for the log to be forced per thread (field: WTASJWET/Number of threads)

Avg SUSPEND Elp
Average suspend time per thread (field: WTASSUSE/Number of threads).

DB2 Mgr

Requests
Average number of DB2 calls per thread (field: WTASDBCT/Number of threads).

Avg Jnl/Log Thread Elapsed
Average DB2 calls elapsed time per thread (field: WTASCDBET/Number of threads).

Avg Jnl/Log Server Elapsed
Average DB2 calls server elapsed time per thread (field: WTASCDBES/Number of threads).

Jnl/Log Thd Elp (Max)
Maximum DB2 thread elapsed time.

Jnl/Log Svr Elp (Max)
Maximum DB2 server elapsed time.

CF Mgr

Avg Count (IXLLSTE)
Average number of IXLLSTE calls per thread (field: WTASCSEC/Number of threads).

Avg Redrives (IXLLSTE)
Average number of IXLLSTE redrives per thread (field: WTASRSEC/Number of threads).

Avg Count (IXLLSTM)
Average number of IXLLSTM calls per thread (field: WTASCMEC/Number of threads).

Avg Redrives (IXLLSTM)
Average number of IXLLSTM redrives per thread (field: WTASRMEC/Number of threads).

Section 3 Queue identification:

```
Queue: CPPX.MQS520.TEST.TEMPQUEUE.023
QType: LOCAL    IType: NONE       GDisp: Q_MGR    QCount:        1
```

Queue
Queue name as specified in OD of MQOPEN request (field: OBJNAME).

QType
Type of queue (field: QTYPE).

IType Index type of queue (field: INDXTYPE).

GDisp
Queue-sharing-Group disposition (field: QSGDISP).

QCount
Number of MQ accounting records in which a transaction referenced the Key for this Queue.

Section 4 Queue call statistics:

	Count	Elapsed	CPU	Susp Elp	JnlWrt Elp	PS Req's	PS Rd Elp	Expired	Page Skip	Msgs Skip
OPEN	1.0	0.000272	0.000267							
CLOSE	1.0	0.000114	0.000113							
PUT	1.0	0.000502	0.000495	0.000000	0.000000	0.0	0.000000	0.0	0.0	0.0

OPEN

Count Average number of OPEN calls per Queue count (field: OPENN/QCount).

Elapsed
Average elapsed time per OPEN call (field: OPENET/OPENN).

CPU Average CPU time per OPEN call (field: OPENCT/OPENN).

CLOSE

Count Average number of CLOSE calls per Queue count (field: CLOSEN/QCount).

Elapsed
Average elapsed time per CLOSE call (field: CLOSEET/CLOSEN).

CPU Average CPU time per CLOSE call (field: CLOSECT/CLOSEN).

GET

Count Average number of GET calls per Queue Count (field: GETN/QCount). This is broken down by the type of GET call:

DES ANY
Destructive GET ANY

DES SPE
Destructive GET SPECIFIC

BRW ANY
BROWSE ANY

BRW SPE
BROWSE SPECIFIC

Elapsed
Average elapsed time per GET call (field: GETET/GETN).

CPU Average CPU time per GET call (field: GETCT/GETN).

Susp Elap
Average suspend time per GET call (field: GETSUSET/GETN).

JnlWrt Elp
Average elapsed time waiting for a journal write per GET call (field: GETJWET/GETN).

PS Req's
Average number of reads from a Page Set per GET call (field: GETPSN/GETN).

PS RD Elp
Average elapsed time waiting for a read from a Page Set per GET call (field: GETPSET/GETN).

Expired
Average number of expired messages (field: GETEXMSG/GETN).

Page Skip
Average number of pages skipped processing a GET (field: GETEPAGE/GETN).

Msgs Skip
Average number of messages skipped processing a GET (field: GETSMSG/GETN).

PUT

Count Average number of PUT calls per Queue count (field: PUTN/QCount).

Elapsed
Average elapsed time per PUT call (field: PUTET/PUTN).

CPU Average CPU time per PUT call (field: PUTCT/PUTN).

Susp Elap
Average suspend time per PUT call (field: PUTSUSET/PUTN).

JnlWrt Elp
Average elapsed time waiting for a journal write per PUT call (field: PUTJWET/PUTN).

PS Req's
Average number of PUT calls from a Page Set per PUT call (field: PUTPSN/PUTN)

PS RD Elp
Average elapsed time waiting for a read from a Page Set per PUT call (field: PUTPSET/PUTN).

PUT1

Count Average number of PUT1 calls per Queue count (field: PUT1N/QCount).

Elapsed
Average elapsed time per PUT1 call (field: PUT1ET/PUT1N).

CPU Average CPU time per PUT1 call (field: PUT1CT/PUT1N).

Susp Elap
Average suspend time per PUT1 call (field: PUT1SUSET/PUT1N).

JnlWrt Elp
Average elapsed time waiting for a Journal write per PUT1 call (field: PUT1JWET/PUT1N).

PS Req's
Average number of PUT1 calls from a Page Set per PUT1 call (field: PUT1PSN/PUT1N).

PS RD Elp
Average elapsed time waiting for a read from a Page Set per PUT1 call (field: PUT1PSET/PUT1N).

INQ

Count Average number of INQ calls per Queue count (field: INQN/QCount).

Elapsed
Average elapsed time per INQ call (field: INQET/INQN).

CPU Average CPU time per INQ call (field: INQCT/INQN).

SET

Count Average number of SET calls per Queue count (field: SETN/QCount).

Elapsed
Average elapsed time per SET call (field: SETET/SETN).

CPU Average CPU time per SET call (field: SETCT/SETN).

Section 5 Queue Get/Put summary:

```
PUT      Avg Bytes         10.0  Avg #PUT w/Data      1.0   Min Msg Size       10  Max Msg Size       10
```

GET

Total Bytes
Average number of data bytes read during MQGET per Queue count (field: GETBYTES/QCount).

#GET w/Data
Average number of successful GET calls per Queue count (field: VALIDGET/QCount).

Min Msg Size
Minimum message size retrieved by GET calls (field: GETMINMS).

Max Msg Size
Maximum message size retrieved by GET calls (field: GETMAXMS).

PUT

Total Bytes
Average number of data bytes written during PUT1 per Queue count (field: PUTBYTES/QCount).

#GET w/Data
Average number of successful PUT calls per Queue count (field: VALIDPUT/QCount).

Min Msg Size
Minimum message size retrieved by PUT calls (field: PUTMINMS).

Max Msg Size
Maximum message size retrieved by PUT calls (field: PUTMAXMS).

OMEGAMON reports

The OMEGAMON reports process OMEGAMON XE for CICS (SMF 112) records to produce a detailed view of how CICS transactions use the following types of database management system (DBMS):

Adabas
CA-Datacom
CA-IDMS
Supra

For each type of DBMS, you can request up to three reports:

- A List report, showing database usage for each transaction.
- A Transaction Summary report, showing database usage summarized by transaction ID.
- A Database Summary report, showing database usage summarized by database.

The information in each report varies depending on the type of DBMS, but typically includes elapsed times and counts for each of the methods that transactions use to access a database, such as read, write, add, update, and delete.

Report command

The OMEGAMON reports can be requested from a Report Set in the CICS PA dialog. Select the **OMEGAMON** report in the **Subsystem Reports** category.

In batch, the `OMEGAMON` command is used to request the OMEGAMON reports.

The command to produce the default reports is:

```
CICSPA OMEGAMON
```

or, equivalently:

```
CICSPA OMEGAMON(OUTPUT(OMEG0001),DBMS(ADABAS,DATACOM,IDMS,SUPRA),
                SUMMARY(TRAN,DATABASE,AVG,MAX),PRINT(TOTALS,DB))
```

The default reports consist of a Transaction Summary report and a Database Summary report for each of the four types of DBMS.

If there are no input records for a type of DBMS, then no reports are produced for it (not even report headings), even when that type of DBMS is specified by the command.

To tailor the report, you can specify report options as follows:

```
CICSPA OMEGAMON[(
             [OUTPUT(ddname|OMEG0001),]
             [LINECNT(nnn),]
             [DBMS(ADABAS,DATACOM,IDMS,SUPRA),]
             [LIST,]
             [SUMMARY(TRAN,DATABASE,AVG,MAX,MIN,TOT,DEV,PEAK(percentile)),]
             [PRINT(TOTALS,DB),]
             [TITLE1('...sub-heading left ...'),]
             [TITLE2('...sub-heading right...')]
             [SELECT(PERFORMANCE(INCLUDE|EXCLUDE(field1(values1),...),
                                 ...))])]
```

You can request a report from all available records, or you can specify selection criteria to request a report from only the records that meet specific requirements.

Report content

You can request up to twelve reports with a single command. For example:

- `OMEGAMON(DBMS(dbms),LIST)` requests up to four List reports, where *dbms* is any combination of: ADABAS, DATACOM, IDMS, or SUPRA).
- `OMEGAMON(DBMS(dbms),SUMMARY(TRAN))` requests up to four Transaction Summary reports.
- `OMEGAMON(DBMS(dbms),SUMMARY(DATABASE))` requests up to four Database Summary reports.
- `OMEGAMON` (with no operands) requests up to eight Summary reports.

List reports appear in the output first, followed by Transaction Summary reports, and then Database Summary reports. The List reports for each type of DBMS do not appear in a fixed order: if the first input record is for Adabas, then the Adabas List report will appear in the output first. The Summary reports appear in the order: Adabas, CA-Datacom, CA-IDMS, Supra.

The List, Transaction Summary, and Database Summary reports for a particular type of DBMS all contain the same information, with the same column headings. The difference between the List report and the Summary reports is that the List report contains information for each individual transaction, whereas the Summary reports summarize all transactions that started in the specified reporting period. The difference between the Transaction Summary and Database Summary reports is the grouping of information: the Transaction Summary report groups information by transaction ID, whereas the Database Summary report groups information by database. Also, the Transaction Summary report might include totals sections (containing information from totals segments of the input records); these sections do not appear in the Database Summary report.

If you request multiple reports with a single command, then CICS PA writes all the reports to the same DDname. To separate the reports into different output files (for example, List reports in one file, Summary reports in another), specify separate commands.

List reports

A List report has the following structure, repeated for each input record:

- A header section, containing: transaction start time, transaction code, task number, CICS APPLID, unit of work (OUW) sequence, OUW ID, and originating system VTAM network name (netname).
- If the `PRINT(TOTALS)` operand is specified: a totals section, containing fields from the input record's totals segment for the selected type of DBMS.
- If the `PRINT(DB)` operand is specified: one database section per database (belonging to the selected type of DBMS) accessed by the transaction. This section contains fields from the detail segments of the input record.

  CA-IDMS only: For consistency with CA-IDMS terminology, the database sections in the CA-IDMS reports are labelled under the column heading “File Name” rather than “Database”.

The content of the totals and database sections depends on the type of DBMS. For details, see “Report content for each type of DBMS” on page 182.

```
 V3R2M0                                                  CICS Performance Analyzer
                                                          OMEGAMON - Adabas List
                                                 ____________________________________________
OMEG0001 Printed at 15:11:10 12/04/2006                                                                    Page       1

 Start Time  Tran Task No   APPLID  UOW Seq    UOWID           Netname
------------ ---- -------- -------- ------- ------------ --------------------
20.41.14.963 ADA5       54 CICSXX64       1 6D0ADE5C4E91 USCACO01.CICSXX64

Totals             Opn User Proc ISN  Search  File Opr CHKPT/RS Misc Req End Tran Cls User
------             -------- -------- -------- -------- -------- -------- -------- --------
            Elapse 4271.571 4277.600 4855.497 4295.033 4295.295 4294.443 4295.950 4106.945
            Count         1        1        1        1        1        1        1        1

Database           Proc ISN  Search  Read Rec Read Fld Read Des   Hold      Add    Update   Delete   Release
-----------        -------- -------- -------- -------- -------- -------- -------- -------- -------- --------
00054-00084 Elapse 4277.600 4855.497    .0000    .0000    .0000    .0000    .0000 4295.033    .0000    .0000
            Count         1        1        0        0        0        0        0        1        0        0
```

Figure 78. OMEGAMON Adabas List report

Summary reports

A Transaction Summary report has the following structure, repeated for each transaction ID:

- If the `PRINT(TOTALS)` operand is specified: a totals section, containing summarized information from the totals segments of the input records for that transaction ID, for the selected type of DBMS.
- If the `PRINT(DB)` operand is specified: one database section per database (for the selected type of DBMS) accessed by the transaction. This section contains summarized information from the detail segments of the input records.
- If the `PRINT(DB)` operand is specified: a subtotal section (identified by the marker "*Total*" under the Database column), summarizing the information for that transaction ID across all databases (for the selected type of DBMS).

A Database Summary report has the following structure, repeated for each database (for the selected type of DBMS):

- One transaction section for each transaction ID that has accessed that database. This section contains summarized information from the detail segments of the input records.
- A subtotal section (identified by the marker "*Tot" under the Tran column), summarizing the information for that database across all transaction IDs.

The content of the totals, database, and subtotal sections depends on the type of DBMS. For details, see "Report content for each type of DBMS" on page 182.

```
 V3R2M0                                          CICS Performance Analyzer
                                        OMEGAMON - CA-DATACOM Transaction Summary
                                        ___________________________________________
OMEG0001 Printed at 12:03:45  3/15/2011    Data from 20:41:14 18/09/2006 to 23:01:08 18/09/2006                        Page       1


Tran #Tasks   Totals                Add    Backout   Count   Delete  Get Next  Get Set  Loc Gen Loc Spec
---- -------- ------             -------- -------- -------- -------- -------- -------- -------- --------
DCO1     1022          Elapse Avg   8.0748    .3218    .2696    .2683    .2879   1.3106    .1756    .1304
                              Max 219.9388  31.9160  15.7942  10.2236   6.1604  64.1597  27.1319  56.1644
                       Count  Avg        1        1        1        1        1        1        1        1
                              Max        1        1        1        1        1        1        1        1

                                  Log Oper   Read    Release  Select   Sel Set Sys/Othr  Update
                                  -------- -------- -------- -------- -------- -------- --------
                       Elapse Avg    .1059    .0851    .1009    .2673    .1338    .0733    .0934
                              Max  18.5467  19.4642   7.1434  70.1891  34.6685   2.9491   3.8011
                       Count  Avg        1        1        1        1        1        1        1
                              Max        1        1        1        1        1        1        1

     #Tasks   Database              Add     Count   Delete  Get Next  Get Set Loc Spec   Read    Release  Select   Sel Set  Update
     -------- --------           -------- -------- -------- -------- -------- -------- -------- -------- -------- -------- --------
            1 TBL998   Elapse Avg    .0655    .0000    .0000    .0000    .0000    .0000    .0000    .0000    .3277    .0000    .0000
                              Max    .0655    .0000    .0000    .0000    .0000    .0000    .0000    .0000    .3277    .0000    .0000
                       Count  Avg        1        1        1        1        1        1        1        1        1        1        1
                              Max        1        1        1        1        1        1        1        1        1        1        1

⋮
(other databases for this transaction)
⋮

     #Tasks   Database              Add     Count   Delete  Get Next  Get Set Loc Spec   Read    Release  Select   Sel Set  Update
     -------- --------           -------- -------- -------- -------- -------- -------- -------- -------- -------- -------- --------
         1022 *Total*  Elapse Avg   8.0748    .2696    .2683    .2879   1.3106    .1304    .0851    .1009    .2673    .1338    .0934
                              Max 219.9388  15.7942  10.2236   6.1604  64.1597  56.1644  19.4642   7.1434  70.1891  34.6685   3.8011
                       Count  Avg        1        1        1        1        1        1        1        1        1        1        1
                              Max        1        1        1        1        1        1        1        1        1        1        1
⋮

(other transactions for this DBMS)
```

Figure 79. OMEGAMON CA-Datacom Transaction Summary report

Report content for each type of DBMS

The structure of the OMEGAMON reports are similar regardless of which DBMS the report is for; however, the detailed contents depend on the DBMS. The following topics describe the report content for each type of DBMS. Each of these topics contains two tables:

- The first table describes the contents of the totals sections in a report, based on information from the totals segments in the input records.
- The second table describes the contents of the database sections in a report, based on information from the detail segments in the input records.

Adabas report content: The following tables describe the content of OMEGAMON reports for Adabas.

Table 7. OMEGAMON report contents for Adabas: totals section

Column heading	Row heading	OMEGAMON field	Description
Opn User	Elapse	ADABAS_T_CLOCK1	Elapsed time of the Open User (Adabas OP) requests run by this task.
	Count	ADABAS_T_COUNT1	Total Open User requests run by this task.
Proc ISN	Elapse	ADABAS_T_CLOCK2	Elapsed time of the Process ISN requests (Adabas S8 and S9) run by this task.
	Count	ADABAS_T_COUNT2	Total Process ISN requests run by this task.
Search	Elapse	ADABAS_T_CLOCK3	Elapsed time of the Search (Adabas S1, S2, S3, S4, and S5) requests run by this task.
	Count	ADABAS_T_COUNT3	Total Search requests run by this task.

Table 7. OMEGAMON report contents for Adabas: totals section (continued)

Column heading	Row heading	OMEGAMON field	Description
File Opr	Elapse	ADABAS_T_CLOCK4	Elapsed time of the File Operation requests run by this task. Individual File Operation requests are recorded in the detail portion of the SMF type 112 record.
	Count	ADABAS_T_COUNT4	Total File Operation requests run by this task.
CHKPT/RS	Elapse	ADABAS_T_CLOCK5	Elapsed time of the Checkpoint/Restart (Adabas C1, C2, and C3) requests run by this task.
	Count	ADABAS_T_COUNT5	Total Checkpoint/Restart requests run by this task.
Misc Req	Elapse	ADABAS_T_CLOCK6	Elapsed time of Miscellaneous (Adabas BT, C5, RC, and RE) requests run by this task.
	Count	ADABAS_T_COUNT6	Total Miscellaneous requests run by this task.
End Tran	Elapse	ADABAS_T_CLOCK7	Elapsed time of the End Transaction (Adabas ET) requests run by this task.
	Count	ADABAS_T_COUNT7	Total End Transaction requests run by this task.
Cls User	Elapse	ADABAS_T_CLOCK8	Elapsed time of the Close User (Adabas CL) requests run by this task.
	Count	ADABAS_T_COUNT8	Total Close User requests run by this task.

Table 8. OMEGAMON report contents for Adabas: database section

Column heading	Row heading	OMEGAMON field	Description
Proc ISN	Elapse	ADABAS_F_CLOCK1	Elapsed time of the Process ISN (Adabas S8) requests run by this task.
	Count	ADABAS_F_COUNT1	Total Process ISN requests run by this task.
Search	Elapse	ADABAS_F_CLOCK2	Elapsed time of the Search (Adabas S1, S2, S3, S4, and S5) requests run by this task.
	Count	ADABAS_F_COUNT2	Total Search requests run by this task.
Read Rec	Elapse	ADABAS_F_CLOCK3	Elapsed time of the Read Record (Adabas L1, L2, L3, L4, L5, and L6) requests run by this task.
	Count	ADABAS_F_COUNT3	Total Read Record requests run by this task.
Read Fld	Elapse	ADABAS_F_CLOCK4	Elapsed time of the Read Field (Adabas LF) requests run by this task.
	Count	ADABAS_F_COUNT4	Total Read Field requests run by this task.
Read Des	Elapse	ADABAS_F_CLOCK5	Elapsed time of the Read Descriptor (Adabas L9) requests run by this task.
	Count	ADABAS_F_COUNT5	Total Read Descriptor requests run by this task.
Hold	Elapse	ADABAS_F_CLOCK6	Elapsed time of Hold (Adabas HI) requests run by this task.
	Count	ADABAS_F_COUNT6	Total Hold requests run by this task.
Add	Elapse	ADABAS_F_CLOCK7	Elapsed time of the Add (Adabas N1 and N2) requests run by this task.
	Count	ADABAS_F_COUNT7	Total Add requests run by this task.

Table 8. OMEGAMON report contents for Adabas: database section (continued)

Column heading	Row heading	OMEGAMON field	Description
Update	Elapse	ADABAS_F_CLOCK8	Elapsed time of the Update (Adabas A1 and A4) requests run by this task.
	Count	ADABAS_F_COUNT8	Total Update requests run by this task.
Delete	Elapse	ADABAS_F_CLOCK9	Elapsed time of the Delete (Adabas E1 and E4) requests run by this task.
	Count	ADABAS_F_COUNT9	Total Delete requests run by this task.
Release	Elapse	ADABAS_F_CLOCK10	Elapsed time of the Release (Adabas RI) requests run by this task.
	Count	ADABAS_F_COUNT10	Total Release requests run by this task.

The following table summarizes how CICS PA maps the data for each Adabas command to the column headings in the report.

Table 9. Mapping of Adabas commands to OMEGAMON report column headings

Adabas commands	Database section	Totals section
A1, A4	Update	File Opr
BT	Misc Req	Misc Req
CL	Cls User	Cls User
C1 - C3	CHKPT/RS	CHKPT/RS
C5	Misc Req	Misc Req
ET	Misc Req	Misc Req
E1, E4	Delete	File Opr
HI	Hold	File Opr
LF	Read Fld	File Opr
L1 - L6	Read Rec	File Opr
L9	Read Des	File Opr
N1, N2	Add	File Opr
OP	Opn User	Opn User
RC	Misc Req	Misc Req
RE	Misc Req	Misc Req
RI	Release	File Opr
S1 - S5	Search	Search
S8, S9	Proc ISN	Proc ISN

CA-Datacom report content: The following tables describe the content of OMEGAMON reports for CA-Datacom.

Table 10. OMEGAMON report contents for CA-Datacom: totals section

Column heading	Row heading	OMEGAMON field	Description
Add	Elapse	DATACOM_T_CLOCK1	Elapsed time of the Add (CA-Datacom ADDIT) requests run by this task.
	Count	DATACOM_T_COUNT1	Total Add requests run by this task.

Table 10. OMEGAMON report contents for CA-Datacom: totals section (continued)

Column heading	Row heading	OMEGAMON field	Description
Backout	Elapse	DATACOM_T_CLOCK2	Elapsed time of the Backout requests run by this task.
	Count	DATACOM_T_COUNT2	Total Backout requests run by this task.
Count	Elapse	DATACOM_T_CLOCK3	Elapsed time of the Count requests run by this task.
	Count	DATACOM_T_COUNT3	Total Count requests run by this task.
Delete	Elapse	DATACOM_T_CLOCK4	Elapsed time of the Delete (CA-Datacom DELET) requests run by this task.
	Count	DATACOM_T_COUNT4	Total Delete requests run by this task.
Get Next	Elapse	DATACOM_T_CLOCK5	Elapsed time of the Get Next (CA-Datacom GETIT and GETPS) requests run by this task.
	Count	DATACOM_T_COUNT5	Total Get Next requests run by this task.
Get Set	Elapse	DATACOM_T_CLOCK6	Elapsed time of Get Set (CA-Datacom GSETL and GSETP) requests run by this task.
	Count	DATACOM_T_COUNT6	Total Get Set requests run by this task.
Loc Gen	Elapse	DATACOM_T_CLOCK7	Elapsed time of the Locate Generic requests run by this task. Locate Generic and Locate Specific requests consist of CA-Datacom requests LOCBR, LOCKG, LOCKI, LOCKL, LOCKR, LOCKX, LOCKY, LOCNE, LOCNK, LOCNR, and LOCNX.
	Count	DATACOM_T_COUNT7	Total Locate Generic requests run by this task.
Loc Spec	Elapse	DATACOM_T_CLOCK8	Elapsed time of the Locate Specific requests run by this task.
	Count	DATACOM_T_COUNT8	Total Locate Specific requests run by this task.
Log Oper	Elapse	DATACOM_T_CLOCK9	Elapsed time of the Log Operation requests run by this task.
	Count	DATACOM_T_COUNT9	Total Log Operation requests run by this task.
Read	Elapse	DATACOM_T_CLOCK10	Elapsed time of the Read requests run by this task. Read requests consist of CA-Datacom requests REDBR, RDUBR, REDID, RDUID, REDKG, RDUKG, REDKL, RDUKL, REDKR, RDUKR, REDKX, RDUKX, REDKY, RDUKY, REDLE, RDULE, REDNE, RDUNE, REDNK, RDUNK, REDNR, RDUN, REDNX, and RDUNX.
	Count	DATACOM_T_COUNT10	Total Read requests run by this task.
Release	Elapse	DATACOM_T_CLOCK11	Elapsed time of the Release requests run by this task.
	Count	DATACOM_T_COUNT11	Total Release requests run by this task.
Select	Elapse	DATACOM_T_CLOCK12	Elapsed time of the Select requests run by this task. Select requests consist of CA-Datacom requests SELNR, SELSM, SELCN, SELFR, and SELST.
	Count	DATACOM_T_COUNT12	Total Select requests run by this task.
Sel Set	Elapse	DATACOM_T_CLOCK13	Elapsed time of the Select Set requests run by this task.
	Count	DATACOM_T_COUNT13	Total Select Set requests run by this task.

Table 10. OMEGAMON report contents for CA-Datacom: totals section (continued)

Column heading	Row heading	OMEGAMON field	Description
Sys/Other	Elapse	DATACOM_T_CLOCK14	Elapsed time of the System/Other requests run by this task. System/Other requests consist of CA-Datacom requests LOGTB, CNTKR, CNTKY, CNTTB, LOGCP, LOGCR, LOGDR, LOGDW, LOGIT, LOGLB, RELES, RELFL, SELPR, ABEND, CLOSE, INQIN, NOOPS, OPEN, and TEST.
	Count	DATACOM_T_COUNT14	Total System/Other requests run by this task.
Update	Elapse	DATACOM_T_CLOCK15	Elapsed time of the Update (CA-Datacom UPDAT) requests run by this task.
	Count	DATACOM_T_COUNT15	Total Update requests run by this task.

Table 11. OMEGAMON report contents for CA-Datacom: database section

Column heading	Row heading	OMEGAMON field	Description
Add	Elapse	DATACOM_F_CLOCK1	Elapsed time of the Add (CA-Datacom ADDIT) requests run by this task.
	Count	DATACOM_F_COUNT1	Total Add requests run by this task.
Count	Elapse	DATACOM_F_CLOCK3	Elapsed time of the Count (CA-Datacom CNTKR, CNTKY, and CNTTB) requests run by this task.
	Count	DATACOM_F_COUNT3	Total Count requests run by this task.
Delete	Elapse	DATACOM_F_CLOCK4	Elapsed time of the Delete (CA-Datacom DELET) requests run by this task.
	Count	DATACOM_F_COUNT4	Total Delete requests run by this task.
Get Next	Elapse	DATACOM_F_CLOCK5	Elapsed time of the Get Next (CA-Datacom GETIT and GETPS) requests run by this task.
	Count	DATACOM_F_COUNT5	Total Get Next requests run by this task.
Get Set	Elapse	DATACOM_F_CLOCK6	Elapsed time of Get Set (CA-Datacom GSETL and GSETP) requests run by this task.
	Count	DATACOM_F_COUNT6	Total Get Set requests run by this task.
Loc Spec	Elapse	DATACOM_F_CLOCK8	Elapsed time of the Locate Specific requests run by this task. Locate Specific requests consist of CA-Datacom requests LOCBR, LOCKG, LOCKI, LOCKL, LOCKR, LOCKX, LOCKY, LOCNE, LOCNK, LOCNR, and LOCNX.
	Count	DATACOM_F_COUNT8	Total Locate Specific requests run by this task.
Read	Elapse	DATACOM_F_CLOCK10	Elapsed time of the Read requests run by this task. Read requests consist of CA-Datacom FREEX, CNTRL, COMIT, ENDLG, ENDTO, MARKL, QMARK, QUIET, RESET, and RSTAT requests.
	Count	DATACOM_F_COUNT10	Total Read requests run by this task.
Release	Elapse	DATACOM_F_CLOCK11	Elapsed time of the Release requests run by this task. Release requests consist of CA-Datacom requests GETIT, GETPS, GSETL, GSETP, REDBR, RDUBR, REDID, RDUID, REDKG, RDUKG, REDKL, RDUKL, REDKR, RDUKR, REDKX, RDUKX, REDKY, RDUKY, REDLE, RDULE, REDNE, RDUNE, REDNK, RDUNK, REDNR, RDUN, REDNX, and RDUNX.
	Count	DATACOM_F_COUNT11	Total Release requests run by this task.

Table 11. OMEGAMON report contents for CA-Datacom: database section (continued)

Column heading	Row heading	OMEGAMON field	Description
Select	Elapse	DATACOM_F_CLOCK12	Elapsed time of the Select (CA-Datacom SELNR and SELSM) requests run by this task.
	Count	DATACOM_F_COUNT12	Total Select requests run by this task.
Sel Set	Elapse	DATACOM_F_CLOCK13	Elapsed time of the Select Set (CA-Datacom SELCN, SELFR, and SELST) requests run by this task.
	Count	DATACOM_F_COUNT13	Total Select Set requests run by this task.
Update	Elapse	DATACOM_F_CLOCK15	Elapsed time of the Update (CA-Datacom UPDAT) requests run by this task.
	Count	DATACOM_F_COUNT15	Total Update requests run by this task.

CA-IDMS report content: The following tables describe the content of OMEGAMON reports for CA-IDMS.

Table 12. OMEGAMON report contents for CA-IDMS: totals section

Column heading	Row heading	OMEGAMON field	Description
Bind RU	Elapse	IDMS_T_CLOCK1	Elapsed time of the Bind RU (request unit) requests run by this task. Bind RU requests consist of CA-IDMS 2, 48, and 59 requests.
	Count	IDMS_T_COUNT1	Total Bind RU requests run by this task.
Rec Opr	Elapse	IDMS_T_CLOCK2	Elapsed time of the Record Operation requests run by this task. Record Operation requests consist of CA-IDMS requests 3, 4, 6, 7, 10-13, 18, 19, 22, 23, 32-35, 42-46, 50-53, 75-77, 89, and 90.
	Count	IDMS_T_COUNT2	Total Record Operation requests run by this task.
Area Opr	Elapse	IDMS_T_CLOCK3	Elapsed time of the Area Operation requests run by this task. Area Operation requests consist of CA-IDMS requests 9, 15, 17, 21, 25, 36-41, 79, 93, and 94.
	Count	IDMS_T_COUNT3	Total Area Operation requests run by this task.
Set Opr	Elapse	IDMS_T_CLOCK4	Elapsed time of the Set Operation requests run by this task. Set Operation requests consist of CA-IDMS requests 8, 14, 16, 20, 24, 31, 60, 62, 64, 65, 78, 80-86, 91 and 92.
	Count	IDMS_T_COUNT4	Total Set Operation requests run by this task.
Com/Rlbk	Elapse	IDMS_T_CLOCK5	Elapsed time of the Commit/Rollback requests run by this task. Commit/Rollback requests consist of CA-IDMS requests 66, 67, 95, and 96.
	Count	IDMS_T_COUNT5	Total Commit/Rollback requests run by this task.
Acc Stat	Elapse	IDMS_T_CLOCK6	Elapsed time of Accept Statistics requests run by this task.
	Count	IDMS_T_COUNT6	Total Accept Statistics requests run by this task.
AcCurKey	Elapse	IDMS_T_CLOCK7	Elapsed time of the Accept Key / Current Key (CA-IDMS 54-57, 76-72, 87, and 88) requests run by this task.
	Count	IDMS_T_COUNT7	Total Accept Key / Current Key requests run by this task.
LRF	Elapse	IDMS_T_CLOCK8	Elapsed time of the Logical Record Facility) LRF requests run by this task.
	Count	IDMS_T_COUNT8	Total LRF requests run by this task.

Table 12. OMEGAMON report contents for CA-IDMS: totals section (continued)

Column heading	Row heading	OMEGAMON field	Description
ProcLogic	Elapse	IDMS_T_CLOCK9	Elapsed time of the Proc / Logic requests run by this task.
	Count	IDMS_T_COUNT9	Total Proc / Logic requests run by this task.
FinishRU	Elapse	IDMS_T_CLOCK10	Elapsed time of the Finish RU (CA-IDMS 2, 48, and 59) requests run by this task.
	Count	IDMS_T_COUNT10	Total Finish RU requests run by this task.

Table 13. OMEGAMON report contents for CA-IDMS: database section (Record operations)

Column heading	Row heading	OMEGAMON field	Description
Bind Rec	Elapse	IDMS_F_CLOCK1	Elapsed time of the Bind Record (CA-IDMS 48,6-25, 30-34, 43, 50, 51, and 75-79) requests run by this task.
	Count	IDMS_F_COUNT1	Total Bind Record requests run by this task.
Gt/Fn/Ob	Elapse	IDMS_F_CLOCK2	Elapsed time of the Get/Find/Obtain requests run by this task. Get/Find/Obtain requests consist of CA-IDMS requests 6-25, 30-34, 43, 50, 51, 75-79, 54-57, 68-70, 72, and 80-86.
	Count	IDMS_F_COUNT2	Total Get/Find/Obtain requests run by this task.
Acc/Retn	Elapse	IDMS_F_CLOCK3	Elapsed time of the Accept/Return requests run by this task. Accept/Return requests consist of CA-IDMS requests 54-57, 68-70, 72, 80-86, and 87-94.
	Count	IDMS_F_COUNT3	Total Accept/Return requests run by this task.
Keep	Elapse	IDMS_F_CLOCK4	Elapsed time of the Keep requests run by this task. Keep consist of CA-IDMS requests 36-41, 60-65, and 87-94.
	Count	IDMS_F_COUNT4	Total Keep requests run by this task.
Stor Rec	Elapse	IDMS_F_CLOCK5	Elapsed time of the Store Records (CA-IDMS 42) requests run by this task.
	Count	IDMS_F_COUNT5	Total Store Records requests run by this task.
Modify	Elapse	IDMS_F_CLOCK6	Elapsed time of Modify (CA-IDMS 35) requests run by this task.
	Count	IDMS_F_COUNT6	Total Modify requests run by this task.
Erase Perm	Elapse	IDMS_F_CLOCK7	Elapsed time of the Erase Perm (CA-IDMS 3) requests run by this task.
	Count	IDMS_F_COUNT7	Total Erase Perm requests run by this task.
Eras Sel	Elapse	IDMS_F_CLOCK8	Elapsed time of the Erase Select (CA-IDMS 53) requests run by this task.
	Count	IDMS_F_COUNT8	Total Erase Select requests run by this task.
Eras All	Elapse	IDMS_F_CLOCK9	Elapsed time of the Erase All (CA-IDMS 4) requests run by this task.
	Count	IDMS_F_COUNT9	Total Erase All requests run by this task.
Eras Unq	Elapse	IDMS_F_CLOCK10	Elapsed time of the Erase Unqualified (CA-IDMS 52) requests run by this task.
	Count	IDMS_F_COUNT10	Total Erase Unqualified requests run by this task.
Con/Disc	Elapse	IDMS_F_CLOCK11	Elapsed time of the Connect/Disconnect (CA-IDMS 44 and 46) requests run by this task.
	Count	IDMS_F_COUNT11	Total Connect/Disconnect requests run by this task.

Table 14. OMEGAMON report contents for CA-IDMS: database section (Area, Noname, or Set operations)

Column heading	Row heading	OMEGAMON field	Description
Gt/Fn/Ob	Elapse	IDMS_F_CLOCK1	Elapsed time of the Get/Find/Obtain requests run by this task. Get/Find/Obtain requests consist of CA-IDMS requests 48, 6-25, 30-34, 43, 50, 51 and 75-79.
	Count	IDMS_F_COUNT1	Total Get/Find/Obtain requests run by this task.
Acc/Retn	Elapse	IDMS_F_CLOCK2	Elapsed time of the Accept/Return requests run by this task. Accept/Return requests consist of CA-IDMS requests 6-25, 30-34, 43, 50, 51, 75-79, 54-57, 68-70, 72, and 80-86.
	Count	IDMS_F_COUNT2	Total Accept/Return requests run by this task.
Keep	Elapse	IDMS_F_CLOCK3	Elapsed time of the Keep requests run by this task. Keep requests consist of CA-IDMS requests 54-57, 68-70, 72, 80-86, and 87-94.
	Count	IDMS_F_COUNT3	Total Keep requests run by this task.
Rdy Area	Elapse	IDMS_F_CLOCK4	Elapsed time of the Ready Area (Type A) or If Sets (Type S) requests run by this task. Ready Area or If Sets requests consist of CA-IDMS requests 36-41, 60-65, and 87-94. Not applicable to Type N.
	Count	IDMS_F_COUNT4	Total Ready Area (Type A) or If Sets (Type S) requests run by this task. Not applicable to Type N.

Supra report content: The following tables describe the content of OMEGAMON reports for Supra.

Table 15. OMEGAMON report contents for Supra: totals section

Column heading	Row heading	OMEGAMON field	Description
Add	Elapse	SUPRA_T_CLOCK1	Elapsed time of the Add requests run by this task. Add requests consist of Supra requests ADD-M, ADDVA, ADDVB, ADDVC and ADDVR.
	Count	SUPRA_T_COUNT1	Total Add requests run by this task.
Close	Elapse	SUPRA_T_CLOCK2	Elapsed time of the Close (Supra CLOSX) requests run by this task.
	Count	SUPRA_T_COUNT2	Total Close requests run by this task.
Delete	Elapse	SUPRA_T_CLOCK3	Elapsed time of the Delete (Supra DEL-M and DELVD) requests run by this task.
	Count	SUPRA_T_COUNT3	Total Delete requests run by this task.
Find	Elapse	SUPRA_T_CLOCK4	Elapsed time of the Find (Supra FINDX) requests run by this task.
	Count	SUPRA_T_COUNT4	Total Find requests run by this task.
Open	Elapse	SUPRA_T_CLOCK5	Elapsed time of the Open (Supra OPENX) requests run by this task.
	Count	SUPRA_T_COUNT5	Total Open requests run by this task.
Read	Elapse	SUPRA_T_CLOCK6	Elapsed time of Read requests run by this task. The Read count is comprised of Supra requests RDNXT, READD, READM, READR, READV, and READX.
	Count	SUPRA_T_COUNT6	Total Read requests run by this task.

Table 15. OMEGAMON report contents for Supra: totals section (continued)

Column heading	Row heading	OMEGAMON field	Description
Release	Elapse	SUPRA_T_CLOCK7	Elapsed time of the Release requests run by this task.
	Count	SUPRA_T_COUNT7	Total Release requests run by this task.
Signoff	Elapse	SUPRA_T_CLOCK8	Elapsed time of the Signoff (Supra SINOF) requests run by this task.
	Count	SUPRA_T_COUNT8	Total Signoff requests run by this task.
Signon	Elapse	SUPRA_T_CLOCK9	Elapsed time of the Signon (Supra SIGNON) requests run by this task.
	Count	SUPRA_T_COUNT9	Total Signon requests run by this task.
Sys/Other	Elapse	SUPRA_T_CLOCK10	Elapsed time of the System/Other requests run by this task. System/Other requests consists of Supra requests FREEX, CNTRL, COMIT, ENDLG, ENDTO, MARKL, QMARK, QUIET, RESET, and RSTAT.
	Count	SUPRA_T_COUNT10	Total System/Other requests run by this task.
Write	Elapse	SUPRA_T_CLOCK11	Elapsed time of the Write (Supra WRITD, WRITM, and WRITV) requests run by this task.
	Count	SUPRA_T_COUNT11	Total Write requests run by this task.

Table 16. OMEGAMON report contents for Supra: database section

Column heading	Row heading	OMEGAMON field	Description
Add	Elapse	SUPRA_F_CLOCK1	Elapsed time of the Add requests run by this task. Add requests consist of Supra requests ADD-M, ADDVA, ADDVB, ADDVC, and ADDVR.
	Count	SUPRA_F_COUNT1	Total Add requests run by this task.
Delete	Elapse	SUPRA_F_CLOCK2	Elapsed time of the Delete (Supra DEL-M and DELVD) requests run by this task.
	Count	SUPRA_F_COUNT2	Total Delete requests run by this task.
Find	Elapse	SUPRA_F_CLOCK3	Elapsed time of the Find (Supra FINDX) requests run by this task.
	Count	SUPRA_F_COUNT3	Total Find requests run by this task.
Read	Elapse	SUPRA_F_CLOCK4	Elapsed time of the Read requests run by this task. Read requests consist of Supra requests RDNXT, READD, READM, READR, READV, and READX.
	Count	SUPRA_F_COUNT4	Total Read requests run by this task.
Write	Elapse	SUPRA_F_CLOCK5	Elapsed time of the Write requests run by this task. Write requests consist of Supra requests WRITD, WRITM, and WRITV.
	Count	SUPRA_F_COUNT5	Total Write requests run by this task.

Chapter 7. System reports

The System reports are produced from system data stored in SMF files. The report in this category is:

- "System Logger report"

System Logger report

The System Logger report processes System Logger (SMF 88) records to provide information on the System Logger logstreams and coupling facility structures that are used by CICS Transaction Server for logging, recovery, and backout operations. The report can assist with measuring the effects of tuning changes and identifying Logstream or Structure performance problems.

The System Logger List report shows information on Logstream writes, deletes, and events, as well as Structure Alter events for each SMF recording interval.

The System Logger Summary report summarizes Logstream and Structure statistics so you can measure Logger performance over a longer period of time.

These reports, when used in conjunction with the CICS Logger reports produced from the standard CICS statistics reporting utilities, provide a comprehensive analysis of the logstream activity for all your CICS systems.

Report command

The System Logger report can be requested from a Report Set in the CICS PA dialog. Select the **System Logger** report in the **System Reports** category.

In batch, the `LOGGER` command is used to request the System Logger report.

You can request a detailed list of transaction activity, a summary report, or both.

The command to produce the default report, a summary report of System Logger activity by Logstream name, is:

```
CICSPA LOGGER
```

or

```
CICSPA LOGGER(SUMMARY)
```

To produce a detailed list of System Logger activity:

```
CICSPA LOGGER(LIST)
```

To produce a detailed list of System Logger activity with Alter records:

```
CICSPA LOGGER(LIST(ALTER))
```

To tailor the report, you can specify report options as follows:

```
CICSPA LOGGER(
            [OUTPUT(ddname),]
            [EXTERNAL(ddname),]
            [SUMMARY[(SUMMARYINTERVAL(hh:mm))],]
            [LIST[(ALTER,TIMESEQ)],]
            [INTERVAL(minutes),]
```

```
[SORT(LOGSTREAM|STRUCTURE),]
[TITLE1('...up to 64 characters...'),]
[TITLE2('...up to 64 characters...'),]
[SELECT(LOGGER(INCLUDE|EXCLUDE(field1(values1),...), ...))]
[LOGSTREAM('name.or.pattern'),]
[STRUCTURE('name.or.pattern'),])
```

Report content

The System Logger report examines SMF 88 records.

The report is produced using an external SORT facility. An External Work data set is required to store the records before they are sorted. This data set is either specified explicitly using the **EXTERNAL(ddname)** operand or CICS PA assigns one from the External Work File pool.

The records are sorted in the following order:

- If **SORT(LOGSTREAMNAME)** is specified, the data is sorted by Logstream name, MVS ID, Structure name, then time stamp. This is the default.
- If **SORT(STRUCTURENAME)** is specified, the data is sorted by Structure name, Logstream name, MVS ID, then time stamp.

If **TIMESEQ** is specified for the List report, the data is sorted by Logstream or Structure name within Interval expiry period.

You can filter on Logstream name or Structure name or both by specifying a name or pattern in the **LOGSTREAMNAME** or **STRUCTURENAME** operands.

List report

The following command produces a System Logger List report like that shown in Figure 80 on page 193.

```
CICSPA NOAPPLID,
       LOGGER(OUTPUT(LOGR0001),
              EXTERNAL(CPAXW001),
              LIST,
              SORT(LOGSTREAM))
```

```
                                                CICS Performance Analyzer
                                              System Logger report - List

LOGR0001 Printed at 12:03:45  3/15/2011     Data from 14:00:00:01  5/27/2010 to 14:30:00:12  5/27/2010                Page       1


Logstream name                    Structure name         MVSID       Group       Flag        Interval expired at      Level
IYOT1.DFHLOG                      LOG_JG                 MV55        PROD        Staging     09:00:00.00  6/20/2004   SP7.0.4

           ----------- IXGWRITES ----------                ---------------- DELETIONS -----------------
                                                  Bytes       Count       Count       Bytes       Bytes
                                                Writn to        With     Without       After    Int Stor
                          Total     Average     Interim        DASD        DASD     Offload    w/o DASD
                   Count   Bytes       Bytes     Storage       Write       Write     w. DASD       Write
           --------   --------   --------   --------   --------   --------   --------   --------
              11248    4348827         386    6768128           0        9327           0    3348643

           ------------------------------------------------------ EVENTS ------------------------------------------------------
                                   Demand                                                  Demand     Minimum     Maximum     Staging
                         Staging     DASD     Staging      Entry     Struct     Init'd       Block       Block    DS Async
           Offloads    Threshld   Shifts        Full       Full       Full   Offloads      Length      Length    Buf Full
           --------   --------   --------   --------   --------   --------   --------   --------   --------   --------
                  3          0          0          0          0          0          0         116       1422          0

           ------------------------ EVENTS -------------------------    ---------------- DASD Writes ----------------
                                                Struct     Struct
                                              Rebuilds   Rebuilds                   Total
                   Type1      Type2      Type3    Init'd   Complt'd      Count      Bytes    Average      Waits
           --------   --------   --------   --------   --------   --------   --------   --------   --------
              11216         32          0          0          0          0          0          0          0


Logstream name                    Structure name         Flag          MVSID     Level
*ALTER RECORD*                    LOG_JG                 Staging       MV55      SP7.0.2

------------ STRUCTURE ALTER -----------------
SMF record time stamp   19:15:00:23 10/07/2009

           Current                Current   Targeted     Struct        Log        Log
             Bytes                Average    Average       Size       Data    Streams
           Written   Offloads      Bufsz      Bufsz   (Blocks)     Writes   Connectd
           --------   --------   --------   --------   --------   --------   --------
                 0          2        768        768       5056          0          0
```

Figure 80. System Logger List report

The following fields are shown on the System Logger List report:

Logstream Name
The name of the logstream.

Structure Name
The name of the structure.

MVSID
MVS System ID.

Group
GROUP value for this logstream. Either PROD (production) or TEST.

Flag
Staging. If the SMF88LFT flag is set, this logstream used the staging data set during this interval.

Disconnect. If SMF88LDS is on, this SMF record was generated as a result of a logstream disconnect.

Interval expired at
The time of day when the current SMF interval expired.

Note: When you run the Logger report on a system with a different time zone setting to that of the SMF data, you must specify the **ZONE** operand to convert the System Logger time stamps from GMT to local time. By default, CICS PA will use the reporting system's time zone settings and the Logger report time stamps will not reflect the local time of the data. Specify ZONE to match the time zone of the SMF data and the Logger report time stamps will reflect the local time of the data.

Level
MVS Release level.

Information on **IXGWRITES:**

Count
The number of IXGWRITE requests.

Total Bytes
Bytes written by IXGWRITE requests.

Average Bytes
The average number of bytes written by IXGWRITE requests.

Bytes Writn to Interim Storage
The number of bytes written to interim storage.

Information on **DELETIONS:**

Count With DASD Write
The number of deletes from interim storage written to DASD.

Count Without DASD Write
Number of deletes from interim storage without having been written to the log data set.

Bytes After Offload w. DASD
Bytes deleted after data was offloaded to DASD log data sets. If SMF88SIB is high and the SMF88SAB is low, CICS is successfully using interim storage to avoid the I/O incurred by offloading to DASD log data sets.

Bytes Int Stor w/o DASD Write
Count of bytes deleted instead of being written to DASD. Due to CICS tail trimming, that is, deletion of records which are no longer required for recovery. It shows how successfully CICS avoids offloads for data that it intends to delete from interim storage.

Information on **EVENTS:**

Offloads
Number of times the log stream was offloaded.

Staging Threshld
Number of times system logger detected a Staging Data Set Threshold Hit condition (HIGHOFFLOAD reached) for the staging data set.

Demand DASD Shifts
Number of log stream DASD shifts (additional log data set allocates) initiated by this system. For DFHLOG and DFHSHUNT this value should be small, otherwise too much data is being offloaded. (the LS_SIZE parameter for the IXCMIAPU logstream definition utility should be checked).

Staging Full
Number of times staging data set was full. The cause of any non-zero condition should be investigated.

Entry Full
Number of times all log streams connected to the structure are offloaded by IXLOGR due to 90% of the structure's list entries being full.

Struct Full
Number of times a structure full condition was reached. The cause of any non-zero condition should be investigated.

Demand Init'd Offloads
Number of demand initiated offloads.

Staging DS Async Buf Full
Number of times the system logger detected a Staging Data Set Async Buffer Full condition for this log stream on this system for this SMF interval.

Minimum Block Length
Minimum block length. If set to **7FFFFFFF** then there was no activity for this interval.

Maximum Block Length
Maximum block length.

Type1
Type 1 CF event. Normal write. Indicates that, after the write completed, the percentage of resource in use by the structure was less than the high offload threshold, meaning that system logger is using the coupling facility successfully. This number should be high.

Type2
Type 2 CF event. Indicates that, after the write completed, the percentage of the logstream in use was greater than or equal to the high off load threshold. This can happen at the point where the offload value is reached or the offload is already in progress.

Type3
Type 3 CF event. Indicates that a given log stream is close to consuming 90% of the coupling facility resource allocated to it. A type-3 completion can occur if there is a failure which prevents system logger from promptly moving data from the coupling facility structure to DASD log data sets or if the system logger configuration is tuned incorrectly. For example, system logger's access to its DASD log data sets would be slowed if those data sets reside on the same device as some other heavily-used data sets. A type-3 can also occur if many log streams are defined to share the same structure, because each newly defined log stream causes system logger to dynamically repartition storage among the existing logstreams. If a log stream has a large proportion of type-3 completions, system logger is getting dangerously close to the STRUCTURE FULL condition.

Struct Rebuilds Init'd
Number of structure rebuild events initiated for this log stream, as seen by this system. Excessive structure rebuilds should be investigated. Structures are rebuilt in the event of logstream connectivity failure in accordance with the REBUILDPERCENT parameter of the IXCMIAPU utility.

Struct Rebuilds Compl'd
Number of structure rebuild events completed for this log stream, as seen by this system. Excessive structure rebuilds should be investigated. Structures are rebuilt in the event of logstream connectivity failure in accordance with the REBUILDPERCENT parameter of the IXCMIAPU utility.

Information on **DASD Writes:**

Count
No. of DASD write requests.

Total Bytes
Total bytes written to DASD (offload data sets).

Average
Average number of bytes written to DASD (offload data sets).

Waits
No. of times System Logger had to suspend processing before writing to DASD because a previous DASD write request had not completed.

Information on **STRUCTURE ALTER:**

SMF record time stamp
The time of day when this SMF record was written.

Current Bytes Written
Current WRITTEN-Bytes-Structure. Count of bytes written to the structure on this system.

Offloads
The number of offloads that occurred for this structure.

Current Average Bufsz
Current allocated average buffer size for the structure.

Targeted Average Bufsz
Targeted average buffer size. Average buffer size System Logger attempted to achieve, by altering the element to entry ratio.

Struct Size (Blocks)
Structure Size. Represented in the number of 4K blocks.

Log Data Writes
Total number of log data writes at the time of the recording interval.

Log Streams Connectd
Total number of log streams connected to the structure on this system at the time of the recording interval.

Summary report

The following command produces the Logstream and Structure Summary reports like that shown in Figure 81 on page 197. The report is sorted by Logstream name, without Alter events, and uses the system default interval.

```
CICSPA LOGGER
```

or

```
CICSPA LOGGER(SUMMARY,SORT(LOGSTREAMNAME))
```

```
                                                CICS Performance Analyzer
                                          System Logger - Logstream Summary

LOGR0001 Printed at 12:03:45  3/15/2011     Data from 06:45:00.00  6/20/2010 to 09:30:00.00  6/20/2010                Page      20

Logstream name              MVSID  Structure name         First interval start    Last interval stop      Total Interval
IYOT1.IYO1.DFHJ03           MV55   *DASDONLY*             06:45:00.00  6/20/2010  09:00:00.00  6/20/2010      0002:15:00
      ----------- IXGWRITES ----------                ---------------- DELETIONS -----------------
                                                   Bytes       Count       Count       Bytes       Bytes
                                                 Writn to        With     Without       After    Int Stor
                          Total     Average     Interim        DASD        DASD     Offload    w/o DASD
               Count      Bytes       Bytes     Storage       Write       Write     w. DASD       Write
             --------   --------   --------   --------   --------   --------   --------   --------
Total            45    2506582      55702    2543616         20          0    1130496          0
Rate(/Sec)        0        309                   314          0          0        140          0
Minimum          45    2506582               2543616         20          0    1130496          0
Maximum          45    2506582               2543616         20          0    1130496          0


             ------------------------------------------------ EVENTS ------------------------------------------------
                                   Demand                                                                  Demand     Staging
                        Staging      DASD       Block     Staging       Entry      Struct     Init'd    DS Async
             Offloads   Threshld   Shifts      Length        Full        Full        Full   Offloads    Buf Full
             --------   --------   --------   --------   --------   --------   --------   --------   --------
Total            2          6          6                     0          0          0          0          0
Rate(/Sec)       0          0          0                     0          0          0          0          0
Minimum          2          0          6       16998         0          0          0          0          0
Maximum          2          0          6       65372         0          0          0          0          0

             ----------------------- EVENTS -------------------------    --------------- DASD Writes ----------------
                                                 Struct      Struct
                                               Rebuilds    Rebuilds                    Total
               Type1      Type2      Type3     Init'd    Complt'd       Count       Bytes     Average       Waits
             --------   --------   --------   --------   --------   --------   --------   --------   --------
Total           12          0          0          0          0          8    1114992          0          0
Rate(/Sec)       0          0          0          0          0          0        138                     0
Minimum          0          0          0          0          0          8    1114992                     0
Maximum         12          0          0          0          0          8    1114992                     0
                                                CICS Performance Analyzer
                                          System Logger - Structure Summary

LOGR0001 Printed at 12:03:45  3/15/2011     Data from 07:00:00.00  6/20/2010 to 09:30:00.00  6/20/2010                Page      39


Structure name         MVSID       First interval start    Last interval stop                  Total Interval
LOG_JG                 MVS55       07:00:00.00  6/20/2010  09:00:00.00  6/20/2010                  0002:15:00

             ----------- IXGWRITES ----------                ---------------- DELETIONS -----------------
                                                   Bytes       Count       Count       Bytes       Bytes
                                                 Writn to        With     Without       After    Int Stor
                          Total     Average     Interim        DASD        DASD     Offload    w/o DASD
               Count      Bytes       Bytes     Storage       Write       Write     w. DASD       Write
             --------   --------   --------   --------   --------   --------   --------   --------
Total          9025    2549654        283    4622848        4892        3484    1379383     984662
Rate(/Sec)        1        315                   571           0           0        170        122
Minimum           0          0                     0           0           0          0          0
Maximum        9025    2549654               4622848        4891        3484    1379383     984662

             ------------------------------------------------ EVENTS ------------------------------------------------
                                   Demand                                                                  Demand     Staging
                        Staging      DASD       Block     Staging       Entry      Struct     Init'd    DS Async
             Offloads   Threshld   Shifts      Length        Full        Full        Full   Offloads    Buf Full
             --------   --------   --------   --------   --------   --------   --------   --------   --------
Total            3        257          1                     0          0          0          0          0
Rate(/Sec)       0          0          0                     0          0          0          0          0
Minimum          0          0          0       116           0          0          0          0          0
Maximum          2        257          1      63930          0          0          0          0          0

             ----------------------- EVENTS -------------------------    --------------- DASD Writes ----------------
                                                 Struct      Struct
                                               Rebuilds    Rebuilds                    Total
               Type1      Type2      Type3     Init'd    Complt'd       Count       Bytes     Average       Waits
             --------   --------   --------   --------   --------   --------   --------   --------   --------
Total         9028          0          0          0          0          9    1575063          0          5
Rate(/Sec)       1          0          0          0          0          0        194                     0
Minimum          0          0          0          0          0          0          0                     0
Maximum       9022          0          0          0          0          8    15749.7                     5
```

Figure 81. System Logger Summary report

These reports summarize SMF 88 Subtype 1 and Subtype 11 record data. There are two types of summary report:

1. **Summary by Logstream.** Data is sorted by Logstream, MVS ID, Structure, then time stamp. The second row of result data represents the rate per second (for example, IXGWRITEs per second) calculated from the estimated beginning time of the lowest expiry interval to the end of the highest expiry interval. The beginning time of the lowest expiry interval is calculated by subtracting the first expired TOD from the second expired TOD and subtracting the result from

the first expired TOD. If the report data contains only one expiry interval, rates per second are omitted, since the length of the expired interval cannot be estimated.

2. **Summary by Structure.** Data is sorted by Structure, Logstream, MVS ID, then time stamp.

These reports have the same fields as the System Logger List report. For more information, see "List report" on page 192.

The summary statistics reported are:

Total Total for this field across all intervals

Rate(/Sec)
Activity Rate per second for this field.

Minimum
Minimum value seen for this field in any interval

Maximum
Maximum value seen for this field in any interval

Chapter 8. Performance Graph reports

There are two Transaction Measurement graph reports available from CMF performance class data:

- "Transaction Rate Graph report" on page 201. This report shows the number of transactions completed in the time period and the rate at which the CICS system is running or is able to run.
- "Transaction Response Time Graph report" on page 201. This report shows the service level (response time) for completed transactions.

These graphs are useful as daily indicators of system activity.

You can request a graph using all available records, or you can provide selection criteria to report only the data that meets specific requirements.

The following conditions might prevent the production of complete graph reports:

- If all of the CMF performance class record fields providing data for the graph program are excluded during installation, the graph does not print. A message is issued indicating that the data could not be found.
- If only part of the data for the graph can be located, the graph report prints with an error message indicating that the graph is incomplete.

Report command

The Performance Graph reports can be requested from a Report Set in the CICS PA dialog. Select the **Transaction Rate** report or the **Transaction Response Time** report in the **Performance Graphs** category.

In batch, the `GRAPH` command is used to request the Performance Graph reports.

To create a graph report, use the command:

```
CICSPA GRAPH(graphname)
```

where *graphname* is one of the following operands to designate the type of graph desired:

TRANRATE
for the Transaction Rate graph

RESPONSE
for the Transaction Response Time graph

To tailor the report, you can specify report options as follows:

```
CICSPA GRAPH(RESPONSE|TRANRATE,
            [OUTPUT(ddname),]
            [RANGE1(nnnnn),]
            [RANGE2(nnnnn),]
            [INTERVAL(hh:mm:ss),]
            [LINECount(nnn),]
            [TITLE1('...up to 64 characters...'),]
            [TITLE2('...up to 64 characters...'),]
            [SELECT(PERFORMANCE(INCLUDE|EXCLUDE(field1(values1),...),
                                ...))])
```

Report content

All the graphs produced by CICS PA have a similar structure. Data from the CMF performance class records is collected and time-stamped based on the Stop Time from the CICS CMF performance class records. When the entire input data is processed, the graphing facility of CICS PA is used to print the data. Each line on a graph represents activity for transactions that stopped between the time marked on the current line and the time marked on the previous line.

The default is to print one line for each 5-minute period. The **INTERVAL** operand can be used to accumulate data spanning from 1 second to 24 hours. The data is presented as a single line on a graph. For example:

```
CICSPA GRAPH(RESPONSE,INTERVAL(00:00:03))
```

This example generates the Transaction Response Time graph with each line containing data for each 3-second interval.

To limit the range of the y-axis, use **SELECT(PERFORMANCE** statements. For example, if the input file contains a week's worth of data, the command:

```
CICSPA SELECT(PERFORMANCE(INCLUDE(
             START(FROM(2010/02/13,08:00),
             STOP(TO(2010/02/13,18:00))))),
       GRAPH(RESPONSE)
```

generates the Response Time graph, with the y-axis of the graph beginning at 8:00 in the morning and ending at 6:00 in the evening on February 13, 2010.

The default range for the x-axis of the graph is from zero to the highest value reported. Operands **RANGE1** and **RANGE2** can be used to set the high-value range of the x-axis of the left and right graphs, respectively. For example, if the service level for response time is defined as a maximum of four seconds, the command:

```
CICSPA GRAPH(RESPONSE,RANGE1(4),RANGE2(4))
```

generates the Transaction Response Time graph using the entire acceptable service level as the range of the x-axis. If a line's data exceeds the x-axis range for a graph, the line is printed with an arrow (->) at the right.

The CMF performance class records might be reported in intervals which differ from the intervals in which the data was written. The data is written either:

- in the case of conversational transactions, when CMF can write a performance record at the end of a conversation (specified by MNCONV=YES in the SIT), or
- when a transaction issues a syncpoint and the monitoring syncpoint option has been requested (specified by MNSYNC=YES in the SIT), or
- when a transaction has resided in the system longer than the monitoring frequency interval (specified by MNFREQ=hhmmss in the SIT), or
- when a user event monitoring point (EMP) with the DELIVER option specified is invoked by an application program, or
- when the transaction finishes (is detached).

For example, if there are long-running transactions such as transactions which span entire monitor intervals, the data from these records for these transactions is reflected in the graph of the interval in which the transaction finishes. This data might be different from the intervals in which the data is collected.

For more information, see “Interpreting performance class data” on page 313.

Transaction Rate Graph report

The Transaction Rate Graph helps you understand other graphs and reports by showing the number of transactions on which the reported data is based. It is also useful in understanding the rate at which the CICS system is running or is able to run.

The command to produce the default graph report is:

```
CICSPA GRAPH(TRANRATE)
```

```
 V3R2M0                                                CICS Performance Analyzer
                                                           Transaction Rate

GRTE0002 Printed at 12:03:45  3/15/2011    Data from  11:10:51  3/14/2010 to 11:35:00  3/14/2010                      Page       1
  3/14/2010

  Time     Value |       Average Response Time in  Secs            |     Value |     Number of Transactions Completed            |
HH.MM.SS         |  1.10 2.19 3.29 4.39 5.48 6.58 7.67 8.77 9.87 10.9          |   80   160  240  320  400  480  560  640  720  800
11:10:52         |----|----|----|----|----|----|----|----|----|----|           |----|----|----|----|----|----|----|----|----|----|
11:15:00     3.9 |******************                                      51 |***
11:20:00     3.0 |**************                                          67 |****
11:25:00     4.0 |******************                                      78 |*****
11:30:00     3.6 |****************                                        37 |**
11:35:00    10.9 |**************************************************     713 |*********************************************
```

Figure 82. Transaction Rate Graph report

Average Response Time (left graph)
The average response time in each time interval is plotted against the y-axis using asterisks (***).

This value is computed by subtracting the Start Time (DFHCICS T005) from the Stop Time (DFHCICS T006) for all transactions completed in this time interval. These times are summed and then divided by the Task Count at the end of the interval. The result is the average response time of those transactions that completed within the time interval.

For detailed information on these performance class data fields, see “CMF performance class data fields” on page 263.

Number of Transactions Completed (right graph)
The number of transactions completed in each time interval is plotted against the y-axis using asterisks (***).

This value is a count of all the CMF performance class records written during the interval.

Transaction Response Time Graph report

The Transaction Response Time Graph can be requested daily to determine, over a period of time, the level of service (response time).

The command to produce the default graph report is:

```
CICSPA GRAPH(RESPONSE)
```

```
 V3R2M0                                                CICS Performance Analyzer
                                                            Response Time

GRSP0001 Printed at 12:03:45  3/15/2011    Data from  11:10:51  3/14/2010 to 11:35:00  3/14/2010                      Page       1
  3/14/2010

  Time     Value |       Average Response Time in  Secs            |     Value |     Maximum Response Time in  Secs              |
HH.MM.SS          |  1.10 2.19 3.29 4.39 5.48 6.58 7.67 8.77 9.87 10.9          |   140  280  420  560  700  840  980 1120 1260 1400
11:10:52          |----|----|----|----|----|----|----|----|----|----|           |----|----|----|----|----|----|----|----|----|----|
11:15:00     3.9  |******************                                      81.3 |***
11:20:00     3.0  |**************                                          95.1 |***
11:25:00     4.0  |******************                                     308.9 |***********
11:30:00     3.6  |****************                                        61.0 |**
11:35:00    10.9  |**************************************************  1,386.7 |**************************************************
```

Figure 83. Transaction Response Time Graph report

Average Response Time (left graph)

The average response time in each time interval is plotted against the y-axis using asterisks (***).

This value is computed by subtracting the start time (DFHCICS T005) from the stop time (DFHCICS T006) for all transactions completed in this time interval. These times are summed and then divided by the task count at the end of the interval. The result is the average response time of those transactions that completed within the time interval.

For detailed information on these performance class data fields, see "CMF performance class data fields" on page 263.

Maximum Response Time (right graph)

The maximum response time in each time interval is plotted against the y-axis using asterisks (***).

This value is the same as the value in the left graph, except that the maximum response time is used instead of an average value. This value represents the transaction with the longest response time among those completed during the interval.

Chapter 9. Extracts

The Extract data sets are produced from CMF performance class records. The Record Selection extract also processes other supported record types if requested. The extracts in this category are:

Historical Database facilities are also available in this category:

Cross-System Work extract

The Cross-System Work Extract accepts performance class data from a single or multiple CICS systems and correlates the data by network unit-of-work. A single performance class record is then written to the Extract data set. That one record represents all the work done on behalf of the network unit-of-work.

The default is to extract only the CMF performance class records that are contained in a unique network unit-of-work that includes multiple performance records.

Note: The Cross-System Work Extract will also include multiple performance class records from a single system.

You can request an extract that processes all available input records, or you can specify criteria for record selection to extract only the data that meets specific requirements.

The extract records have the same format as CMF performance class records written by the latest CICS release supported by CICS PA (VRM 670), regardless of the CICS releases of the input records.

After a Cross-System Work Extract data set has been created, it can be used as input to CICS PA for further processing. For example, the Performance List, Performance List Extended, Performance Summary, and Performance Totals Reports can be run against this data set.

Note: If you are using conversational transactions, and you have specified MNCONV=YES in your system initialization parameters to get separate CMF records for each pair of terminal I/O requests, or you have specified MNSYNC=YES in your system initialization parameters to get separate CMF records for each unit-of-work, or you have applications that are using user event monitoring points (EMPs) with the DELIVER option, all records will still be part of the same network unit-of-work. Since they are part of the same network unit-of-work, they will all be merged into one record in the Cross-System Work Extract Data Set. If you, for example, run the Performance Summary Report against this data set, the response time does not represent the response time of an individual screen display, but the complete lifetime of this conversational transaction. The AVE, DEV, MAX, MIN, and TOT statistics might also be skewed in the same way.

Extract command

The Cross–System Work extract can be requested from a Report Set in the CICS PA dialog. Select the **Cross-System Work** extract in the **Extracts** category.

In batch, the `CROSSsystem` command is used to request the Cross-System Work extract:

```
CICSPA CROSSSYSTEM
```

This is the basic command which produces the default Cross-System Work extract data set. When the extract data set is created, the default is to create a new performance record for a network unit-of-work only when there were multiple records within the same network unit-of-work. A network unit-of-work containing a single performance record is not written to the extract data set unless it is requested. It is possible to request that all tasks, single and multiple, or any other variation, be used to create the extract. For more information on how to do this, see the *CICS Performance Analyzer for z/OS User's Guide,* which also discusses how user fields can be included when creating the data set.

To tailor the extract data set, specify extract options as follows:

```
CICSPA CROSSSYSTEM(
             [DDNAME(ddname),]
             [EXTERNAL(ddname),]
             [SYSID(applid,mvsid),]
             [WRITEMULTIPLE,]
             [NOWRITEMULTIPLE,]
             [WRITESINGLE,]
             [NOPRINT,]
             [CHARACTER(OWNER(owner),LENGTH(nnn),HEADER(header)),]
             [CLOCK(OWNER(owner),NUMBER(nnn),HEADER(header)),]
             [COUNT(OWNER(owner),NUMBER(nnn),HEADER(header)),]
             [COMPRESS|NOCOMPRESS,]
             [SELECT(PERFORMANCE(INCLUDE|EXCLUDE(field1(values1),...),
                                 ...))])
```

Note:

1. The DDname used for the cross-system work data set defaults to **CPAOCROS.** The CICS PA dialog generates DDnames in the format **CPAOXSnn** where nn is a sequence number **01-99**. The DDname can be overridden by specifying the **DDNAME** operand.
2. When extract records are written, CICS PA sets the APPLID and MVS SMF ID in the new record to your specification in the SYSID operand. The defaults are **MULTIPLE** and **CICS** respectively. The APPLID and MVS ID you specify can then be defined in SMF Input in the CICS PA dialog, along with the Extract data set name. This enables you to use the Extract data set for reporting from the CICS PA dialog.

Required CMF fields

If you are using the CICS Monitoring Control Table (MCT) Exclude/Include parameters to reduce the size of the performance class record, you must ensure that the data fields required for the Cross-System Work report and extract are not excluded.

The following table lists the fields that must be collected in the performance class records to ensure correct correlation of the data records for the Cross-System Work report and extract.

Table 17. Cross-System Work report and extract: Required CMF fields

Owner	Field ID	CICS Informal Name
DFHCICS	112	RTYPE
DFHCICS	130	RSYSID
DFHDEST	091	TDTOTCT
DFHFILE	093	FCTOTCT
DFHPROG	071	PGMNAME
DFHPROG	113	ABCODEO
DFHTASK	031	TRANNUM
DFHTASK	066	ICTOTCT
DFHTASK	097	NETUOWPX
DFHTASK	098	NETUOWSX
DFHTASK	163	FCTYNAME
DFHTASK	164	TRANFLAG
DFHTEMP	092	TSTOTCT
DFHTERM	111	LUNAME
DFHTERM	169	TERMCNNM

How CICS PA creates Cross-System records

The records that make up the Cross-System Work extract are created by combining records, that is, by combining corresponding fields in the records, of the input data sets. How the fields are combined depends on both the type of record and the type of field.

The types of records that can be combined are:
- Normal Application records
- Terminal Owning Region (TOR) records
- Function Shipping request records.

  Note: Function Shipped Distributed Program Link (DPL) records are interpreted as normal Application records.

The types of fields that can be combined are:
- Character fields
- Packed decimal fields (transaction sequence number)
- Time of day fields (start and stop times)
- Stopwatch (elapsed time) fields
- Accumulators (counters)
  - Normal
  - High-Water Marks (program storage and user storage)
  - Error flags
  - Terminal information flags
  - Transaction definition and status flags.

The following paragraphs describe how the different field types are combined to create the fields for the Cross-System extract records:

Character Fields

Character fields are normally taken from the application records, except for the following special fields:

DFHCBTS C202 PRCSID
The CICS-assigned identifier of the CICS BTS root activity (process ID).

DFHCBTS C203 ACTVTYID
The CICS-assigned identifier of the CICS BTS activity.

DFHTASK C082 TRNGRPID
The transaction group ID.

DFHTASK C190 RRMSURID
The RRMS/MVS Unit-of-Recovery ID (URID).

DFHTASK C194 OTSTID
The Object Transaction Service (OTS) Transaction ID (Tid).

The CICS BTS process ID and activity ID are taken from application records only. If no application record is found, the process ID and activity ID fields appear as hexadecimal zeros.

The transaction group ID is taken from application records only. If no application record is found, the transaction group ID field appears as hexadecimal zeros.

The RRMS/MVS unit-of-recovery ID (URID) is taken from application records only. If no application record is found, the unit-of-recovery ID (URID) field appears as hexadecimal zeros.

The OTS Tid is taken from application records only. If no application record is found or the record is not part of an OTS transaction, the OTS transaction ID (OTSTID) field appears as hexadecimal zeros.

All other character fields are processed as follows:

1. If no application record is found, the character fields appear as hexadecimal zeros.
2. If multiple application records are found, the character fields are taken from the first one in the sort order. Because the sort order within the network unit-of-work is in reverse stop time, the first one in the sort order is usually the one with the latest stop time.

If the field is shorter in the output data than in the input data, only the left-hand bytes that fit are saved. Also, if the field is shorter in the input data than in the output data, it is padded on the right in the output record with hexadecimal zeros.

Packed Fields
The only packed decimal field is the transaction sequence number. It is treated in the same way as a character field and is usually taken from the application records. However:

1. If no application record is found, the packed decimal field appears as packed decimal zeros.
2. If multiple application records are found, the packed decimal field is taken from the first one in the sort order. Because the sort order within the network unit-of-work is in reverse stop time, the first one in the sort order is usually the one with the latest stop time.

Time of Day Fields
Time of day fields include the task start time and the task stop time. The earliest start time of any record and the latest stop time of any record are used. (Exception: if a time is incorrectly set to hexadecimal zero, it is not used). Normally, the difference between the start and stop time is the length of time it

took to complete the entire unit-of-work (response time). This might not be accurate due to unsynchronized STCK values across multiple systems.

The only other time of day field is processed as a special field:

DFHTASK T132 RMUOWID
The identifier of the local unit of work (unit of recovery) for this task.

The local unit of work (unit of recovery) is taken from application records only. If no application record is found, the local unit of work field appears as hexadecimal zeros.

Stopwatch Fields

Stopwatch fields are the fields that CICS uses to measure elapsed time such as dispatch time, CPU time, or terminal control wait time. These fields are added together. However, each stopwatch is actually a combination of the three different components of the stopwatch field described below:

- The first component is the elapsed time measured, and is calculated by adding all of the field time values in the input records.
- The second field is one byte of flags CICS uses to indicate errors. The field is OR'd together so that the result contains any flags that were turned on in any of the input records.
- The third field is a three-byte counter that counts the number of intervals that were timed, and is calculated by adding all of the field count values in the input records.

  Note: Whenever fields are added together, it is possible to get an overflow. If an overflow condition occurs, CICS PA catches the error and forces the result to remain as the highest value that will fit within the field.

Accumulator Fields

The accumulator fields are calculated by adding all of the field values in the input records, except eighteen special fields, which are:

DFHSOCK A292 SONPSHWM
The non-persistent socket high-water mark.

DFHSOCK A293 SOPSHWM
The persistent socket high-water mark.

DFHSTOR A033 SCUSRHWM
The high-water mark of USER storage below 16MB.

DFHSTOR A106 SCUSRHWM
The high-water mark of USER storage above 16MB.

DFHSTOR A116 SCUSRHWM
The high-water mark of CICS storage below 16MB.

DFHSTOR A119 SCUSRHWM
The high-water mark of CICS storage above 16MB.

DFHSTOR A087 PCSTGHWM
The program storage high-water mark.

DFHSTOR A108 PC24BHWM
The program storage high-water mark below 16MB.

DFHSTOR A139 PC31AHWM
The program storage high-water mark above 16MB.

DFHSTOR A143 PC24CHWM
The CDSA program storage high-water mark below 16MB.

DFHSTOR A142 PC31CHWM
The ECDSA program storage high-water mark above 16MB.

DFHSTOR A160 PC24SHWM
The SDSA program storage high-water mark below 16MB.

DFHSTOR A161 PC31SHWM
The ESDSA program storage high-water mark above 16MB.

DFHSTOR A162 PC24RHWM
The RDSA program storage high-water mark below 16MB.

DFHSTOR A122 PC31RHWM
The ERDSA program storage high-water mark above 16MB.

DFHTASK A064 TASKFLAG
The transaction error flags for this transaction.

DFHTASK A164 TRANFLAG
The CICS transaction definition and status information flags for the transaction.

DFHTERM A165 TERMINFO
The CICS terminal information for the transaction.

For the high-water mark fields, the highest value from ***any*** record within the network unit-of-work is used.

Note: This provides a true high-water mark except for one condition: if two tasks within the same network unit-of-work run concurrently, it is not possible to determine the total high-water mark. The tasks peak at different times.

The transaction error flags special accumulator field is a fullword field used as an indicator of error conditions. Instead of being added together, this field is OR'd together. The result has a flag turned on if it was turned on in any record within that network unit-of-work.

The transaction definition and status information flags field is taken from application records only. If no application record is found, the transaction flags field appears as hexadecimal zeros.

The terminal information is a four byte field containing terminal or session information for the task's principal facility. This information is taken from terminal owning records (TOR) only; if no terminal owning record is found, the terminal information field appears as hexadecimal zeros.

User Fields
The five user fields added by CICS PA are:

CICSPA A001 TOTRECS
The total number of input records that were added to produce this record

CICSPA A002 APPLRECS
The total number of application program records that were added to produce this record

CICSPA A003 TRANROUT
The total number of terminal-owning region records that were added to produce this record

CICSPA A004 FUNCSHIP
The total number of function shipping request records that were added to produce this record

CICSPA A005 DPLRECS
The total number of function shipping distributed program link (DPL) request records that were added into this record. This field is a subset of the total number of function shipping requests field.

These CICS PA user fields are always present.

User-Specified
User fields can also be specified on the `CROSSsystem` command. When specified, these user fields are added to the dictionary and the cross-system output record.

Note: It is possible that the input data might not include the standard CICS fields or the user fields that you requested. If this occurs, the cross-system performance records created by CICS PA will still contain these fields. However, the values within the fields are null (hexadecimal zeros).

APPLID Limitations
Because the input data sets typically contain CMF records from many CICS systems, the APPLID of the output data set cannot be made to match the input data. Instead, it is set to **MULTIPLE** to indicate that this data contains information from multiple CICS systems with different APPLIDs. You can override this by specifying the `SYSID` operand.

Note: Do ***not*** use the APPLID of *MULTIPLE* for any of your online systems. This allows you to determine if the data you are processing is from CMF or from CICS PA simply by checking the APPLID.

CMF Requirements
Because only CMF performance class records contain the token field that associates the record with a network unit-of-work, only CMF performance records are processed by the cross-system function of CICS PA.

Within a single logical record, CMF can block several types of data. Within each type of data, CMF can block many data rows. CICS PA does not block the data within the logical record. This means that for every record there is a single unit of data.

Note: A user typically concatenates, as input for the Cross-System Work Extract, two or more unloaded SMF data sets containing CMF performance class records. An example of this would be data sets from a terminal owning region, an application owning region, and a data base owning region.

You should not merge a Cross-System Work Extract data set with another CMF data set, as the resulting records would not contain useful data. However, if you do, be aware of the following:

- The five user fields added to the Cross-System record will no longer accurately reflect the overall total for that network unit-of-work. The totals in the Cross-System record are lost and will only reflect the totals from the additional CMF data set.
- Any user fields included in the original Cross-System extract are not included in the final Cross-System data set unless they are specified on the command input.
- Due to the manner in which the different field types are combined, some of the final Cross-System records might not be correct. See "How CICS PA creates Cross-System records" on page 205 to understand the possible results when combining CMF records with cross-system records.

Recommendation

It is recommended that the Cross-System Work Extract created from the CMF performance class records from two or more systems should ***not*** be concatenated with other CMF files. The results of such a concatenation are questionable as to their use. The Cross-System Extract data set ***can*** be used by itself as input to the CICS PA Performance Reports (especially the List, List Extended, Summary, and Totals reports) to monitor the total amount of resources used by a transaction within a single or across multiple CICS systems.

Cross-System Extract record format

The record format of the Cross-System Work Extract Data Set is variable blocked and the block size has to be large enough to contain a performance class record plus the fields CICS PA adds and any other user fields specified. CICS PA will assign default DCB attributes of `RECFM=VB,LRECL=8188,BLKSIZE=8192` if they are not specified.

The Cross-System Work Extract that is created is fully compatible with the CICS Monitoring Facility (CMF) performance data format. However, there are some important differences between the data created by CICS PA and the data collected by CMF. Still, any program that fully exploits the self-defining data format of CMF should have no problem in processing the data created. The important considerations are:

- Fields
  - Five user fields are in the extract, see "How CICS PA creates Cross-System records" on page 205.
  - Additional user fields are in the extract if requested.
  - All standard CICS CMF fields are in the extract. If a field was missing in the input data, it is set to hexadecimal zeros.
- Records
  - The records from each network unit-of-work ID are combined into one record.
  - Only performance class records are created.
  - Each SMF (CMF) record created contains only one performance class record.
  - The records are not written in time sequence.
- IDs and TIME STAMPs
  - The APPLID of the new data is set to **MULTIPLE** unless overridden by the **SYSID** operand.
  - The SMF time stamp is set to the latest Stop Time of records in the UOW.
  - The Dictionary START and STOP time stamps are set to the earliest start and latest stop time of records in the UOW.

Two factors make it difficult to create a DSECT for the Cross-System record:

1. User fields can be added to the record. This adds additional information to the middle of the record, and also adds to data for these fields at the end of the record.
2. With a maintenance change to CICS PA, the record format can change as long as it remains compatible with the CICS CMF format using the dictionary record supplied at the front of the data set.

The format of the Cross-System Work Extract record is the same as that of a standard CMF performance class record. It corresponds to the default dictionary record for the latest release of CICS. The default is **670.** For a complete description of each field and to understand how the fields are collected, see the *CICS Performance Guide*.

All the CICS fields listed in the table are the "standard" fields included in every data record written to the Cross-System Work Extract data set. In addition, the following five user fields are always written after the CICS fields:

Table 18. Cross-System Work Extract record format: standard user fields

CMF Field ID	Length	CMF Field Name
CICSPA A001	4	TOTRECS
CICSPA A002	4	APPLRECS
CICSPA A003	4	TRANROUT
CICSPA A004	4	FUNCSHIP
CICSPA A005	4	DPLRECS

Additional user fields can be requested and are placed in the output record following the listed fields. These additional fields cause the variable information in the dictionary to change, and affect the length of the records. The length of each additional field depends on the type of the field (and the specified range for character fields). For each additional user field, there is also an additional halfword inserted. The halfword contains a hex value that increments for each additional field. This increases the offset to each field by 2 for each user field that is requested and increases the size of the record.

The Cross-System Work Extract data set is normally in *network unit-of-work ID* sequence. Because the records must be sorted by their network unit-of-work, before they are combined, they are not in the same time sequence as when they were created. It is possible to sort the data set by time sequence if required. Simply use any SORT program and sort the time and date in the SMF header. This field is set to the stop time of the data recorded for each data record. To ensure that the dictionary is the first record in a sorted data set, the time and date in its SMF header is set to the earliest start time of any CMF record in the original data.

Performance Data extract

A Performance Data Extract is created as a delimited text file for the purpose of importing the CMF performance class data into PC spreadsheet or database tools for further detailed analysis and reporting.

You can extract all the CMF performance class records in the input file, or you can specify criteria for data selection to extract a subset of the records which meet specific requirements.

When transferred to a workstation file the extracted performance class data is available to PC applications such as Lotus 1-2-3 or Microsoft Excel.

Extract command

The Performance Data extract can be requested from a Report Set in the CICS PA dialog. Select the **Performance** extract in the **Extracts** category.

In batch, the `EXTRACTPERFORMANCE` command is used to request the default format of the Performance Data extract records. The `LIST` or `SUMMARY` commands can be used to tailor the record format.

Default Performance Data Extract

The command to create the default Performance Data Extract file is:

```
CICSPA EXTRACTPERFORMANCE
```

To tailor the extract file, specify extract options as follows:

```
CICSPA EXTRACTPERFORMANCE(
         [OUTPUT(ddname),]
         [DDNAME(ddname),]
         [DELIMIT('field-delimiter'),]
         [LABELS|NOLABELS,]
         [SELECT(PERFORMANCE(INCLUDE|EXCLUDE(field1(values1),...),
                             ...))])
```

The performance data extract is created using a subset of the CMF performance class data. The CMF exception class data is not used.

CICS PA extracts the data values from the CMF performance class records, formats them, and then adds a field delimiter after each field. The default field delimiter is a semicolon (;) but can be changed by specifying the `DELIMIT` operand.

If any of the required data fields were not collected by the CICS Monitoring Facility, a message is issued and the field in the extract record contains zeros or `Missing.`

The DDname for the Extract data set defaults to **CPAOEXPT**. The CICS PA dialog generates DDnames in the format **CPAOEXnn** where nn is a sequence number **01-99.** The DDname can be overridden by using the **DDNAME** operand.

Performance List Extract

To tailor the format of the extract file like the Performance List report, see “Performance List Extract” on page 20. The List extract supports performance alerts as in the report.

Performance Summary Extract

To tailor the format of the extract file like the Performance Summary report, see "Performance Summary Extract" on page 37. The Summary extract supports performance alerts as in the report.

Performance Data Extract record format

Three record formats are available:

1. The `EXTRACTPERFORMANCE` command is used to request the default format of the Performance Data extract records (see "Default Performance Data Extract").
2. The `LIST` command is used to request the Performance List Extract (see "Performance List Extract" on page 214).
3. The `SUMMARY` command is used to request the Performance Summary Extract (see "Performance Summary Extract" on page 214).

Default Performance Data Extract

The following table shows the fields in the extract file.

Table 19. Extract record format (default)

Data Field	Length	Description
APPLID	8	Generic APPLID
TRAN	4	Transaction ID
TERM	4	Terminal ID
USERID	8	User ID
TASKNO	8	Transaction sequence number
STOP DATE	10	Transaction stop date (yyyy-mm-dd)
STOP TIME	12	Transaction stop time (hh:mm:ss.thm)
RESPONSE	8	Transaction response time
Clocks	8	All clock fields, elapsed time in seconds with a precision of 0.0001 second

Note that the clock field MAXHTDLY (owner: DFHTASK, field ID: 278) is not available from CICS Transaction Server V3.1 and is omitted from the Extract record.

The format of the Performance Data Extract record is static and contains fixed-length blocked records with a record size of 700 bytes. Each field in the record is followed by a text file field delimiter. The default field delimiter is a semicolon (**;**).

```
APPLID  ;TRAN;TERM;USERID  ;  TASKNO; STOP DATE;  STOP TIME ;RESPONSE;DISPATCH;CPU     ;SUSPEND ;DISPWAIT;QRDISPT ;QRCPU   ; . . .
IYK2Z1V1;CSSY;    ;CBAKER  ;      14;2010-05-23; 9:00:11.306;   .4796;   .0837;   .0145;   .3958;   .2169;   .0763;   .0136;
IYK2Z1V1;CSSY;    ;CBAKER  ;      11;2010-05-23; 9:00:11.596;   .7716;   .1924;   .0164;   .5791;   .3425;   .0212;   .0093;
IYK2Z1V1;CSSY;    ;CBAKER  ;      10;2010-05-23; 9:00:11.600;   .7756;   .1598;   .0169;   .6158;   .5744;   .0087;   .0041;
IYK2Z1V1;CPLT;    ;CBAKER  ;       7;2010-05-23; 9:00:27.503; 16.8286;   .8059;   .0279; 16.0227;   .0082;   .0095;   .0039;
IYK2Z1V1;CSSY;    ;CBAKER  ;     III;2010-05-23; 9:00:28.310; 17.4857; 10.3468;  1.9987;  7.1389;   .7171;  2.8730;  1.6315;
   . . .
IYK2Z1V1;CMAC;0031;CBAKER  ;      72;2010-05-23; 9:03:04.207;   .0007;   .0007;   .0006;   .0000;   .0000;   .0007;   .0006;
IYK2Z1V1;CMAC;0031;CBAKER  ;      73;2010-05-23; 9:03:05.908;   .0008;   .0007;   .0006;   .0000;   .0000;   .0007;   .0006;
IYK2Z1V1;CMAC;0031;CBAKER  ;      74;2010-05-23; 9:03:06.410;   .0007;   .0007;   .0006;   .0000;   .0000;   .0007;   .0006;
IYK2Z1V1;CSHQ;    ;CBAKER  ;      23;2010-05-23; 9:03:15.659; 167.394;   .2466;   .0246; 167.147;   .0012;   .0573;   .0046;
IYK2Z1V1;CESD;    ;CBAKER  ;      76;2010-05-23; 9:03:15.699;   .0387;   .0307;   .0042;   .0080;   .0026;   .0016;   .0015;
IYK2Z1V1;CSNC;    ;CBAKER  ;      21;2010-05-23; 9:03:17.527; 175.828;  1.0305;   .0056; 174.797;   .0071;  1.0053;   .0020;
```

Figure 84. Performance Data Extract file (default format)

```
 V3R2M0                                                  CICS Performance Analyzer
                                                            Performance Extract

EXPT0001 Printed at 12:03:45  3/15/2011     Data from 09:00:09  5/23/2010 to 09:03:22  5/23/2010                      Page   1

CPAOEX01 Extract has completed successfully
         Data Set Name   . . . . . CICSPA.DEFAULT.EXTRACT
         Record count  . . . . . .          74
```

Figure 85. Performance Data Extract Recap report (default extract)

Performance List Extract

The following command produces a Performance List Extract file like that in Figure 86.

```
CICSPA LIST(OUTPUT(EXPT0001),
            DDNAME(CPAOEX01),
            DELIMIT(';'),
            LABELS,
            FIELDS(TRAN,STYPE,TERM,USERID,RSYSID,
                   PROGRAM,TASKNO,
                   STOP(TIMET),RESPONSE,
                   DISPATCH(TIME),
                   CPU(TIME),
                   SUSPEND(TIME),
                   DISPWAIT(TIME),
                   FCWAIT(TIME),FCAMCT,
                   IRWAIT(TIME)))
```

To use the CICS PA dialog to request this extract, simply specify a LIST or LISTX Report Form for the Performance Data extract.

```
Tran;SC;Term;Userid;RSID;Program;TaskNo;Stop Time;Response;Dispatch Time;User CPU Time;Suspend Time;DispWait Time;;FC Wait Ti . . .
CPLT;U ;    ;CICSUSER;    ;DFHSIPLT;       6;15:41:29.169;   .5196;   .1771;   .0316;   .3425;   .3422;   .0000;        0;   .0000
CSSY;U ;    ;CICSUSER;    ;DFHAPATT;      15;15:41:30.057;   .4595;   .0036;   .0033;   .4558;   .0000;   .0000;        0;   .0000
CSSY;U ;    ;CICSUSER;    ;DFHAPATT;      16;15:41:30.570;   .9663;   .0069;   .0088;   .9594;   .0795;   .0000;        0;   .0000
CSSY;U ;    ;CICSUSER;    ;DFHAPATT;      17;15:41:33.624;  4.0131;   .1379;   .0311;  3.8752;  1.7449;   .0000;        0;   .0000
CSSY;U ;    ;CICSUSER;    ;DFHAPATT;      12;15:41:33.783;  4.2133;   .1621;   .0494;  4.0511;  2.5906;   .0000;        0;   .0000
CGRP;U ;    ;CICSUSER;    ;DFHZCGRP;      11;15:41:34.307;  5.1156;   .1956;   .0603;  4.9199;  1.9401;   .0000;        0;   .0000
CSSY;U ;    ;CICSUSER;    ;DFHAPATT;      14;15:41:34.388;  4.7978;   .1880;   .0652;  4.6098;  2.3487;   .0000;        0;   .0000
CSSY;U ;    ;CICSUSER;    ;DFHAPATT;      10;15:41:34.452;  5.2738;  1.4746;   .2259;  3.7992;   .6720;   .0000;        0;   .0000
CSSY;U ;    ;CICSUSER;    ;DFHAPATT;       9;15:41:34.513;  5.3366;   .7647;   .1494;  4.5719;  1.6657;   .0000;        0;   .0000
CSSY;U ;    ;CICSUSER;    ;DFHAPATT;      13;15:41:34.868;  5.2787;   .7009;   .1740;  4.5778;  2.0694;   .0000;        0;   .0000
CLQ2;U ;    ;CICSUSER;    ;DFHLUP  ;      19;15:42:31.258;  7.2473;   .2907;   .0416;  6.9566;  1.9555;   .0000;        0;  3.7840
CSSY;U ;    ;CICSUSER;    ;DFHAPATT;     III;15:42:43.811; 74.6388; 48.6230; 18.0249; 26.0158;  7.7521;   .6756;     1506;   .0000
CLR2;TO;<AAK;CICSUSER;    ;DFHLUP  ;      20;15:42:43.847;   .4513;   .0130;   .0128;   .4383;   .0215;   .0000;        0;   .4363
CSFU;S ;    ;CICSUSER;    ;DFHFCU  ;      25;15:42:45.071;   .3998;   .3770;   .0234;   .0228;   .0184;   .0000;        0;   .0000
CRSQ;S ;    ;CICSUSER;    ;DFHCRQ  ;      24;15:42:45.437;   .7659;   .0740;   .0247;   .6919;   .6893;   .0000;        0;   .0000
CXRE;S ;    ;CICSUSER;    ;DFHZXRE ;      26;15:42:45.919;   .8530;   .4739;   .0316;   .3791;   .3788;   .0000;        0;   .0000
CWBG;S ;    ;CICSUSER;    ;DFHWBGB ;      23;15:42:46.342;  1.6720;   .4074;   .0248;  1.2645;  1.2634;   .0000;        0;   .0000
```

Figure 86. Performance List Extract file

```
 V3R2M0                                                  CICS Performance Analyzer
                                                            Performance List

EXPT0001 Printed at 12:03:45  3/15/2011    Data from 15:41:29  7/12/2010                        APPLID CICPAOR1      Page      1

CPAOEX01 Extract has completed successfully
         Data Set Name . . . . CICSPA.LIST.EXTRACT
         Record count  . . . .         119
```

Figure 87. Performance List Extract Recap report

Performance Summary Extract

The following command produces a Performance Summary Extract file like that in Figure 88 on page 215.

```
CICSPA SUMMARY(OUTPUT(EXPT0001),
              DDNAME(CPAOEX01),
              DELIMIT(';'),
              LABELS,
              EXTERNAL(CPAXW001),
              INTERVAL(00:01:00),
              FIELDS(TRAN,TASKCNT,
```

```
                                RESPONSE(AVE,MAX),DISPATCH(TIME(AVE)),
                                CPU(TIME(AVE)),SUSPEND(TIME(AVE)),
                                QRCPU(TIME(AVE)),MSCPU(TIME(AVE)),
                                ROCPU(TIME(AVE)),KY8CPU(TIME(AVE)),
                                J8CPU(TIME(AVE)),L8CPU(TIME(AVE)),
                                S8CPU(TIME(AVE))),
                        TITLE1('Transaction CICS TCB CPU Analysis - Summary'))
```

To use the CICS PA dialog to request this extract, simply specify a SUMMARY Report Form for the Performance Extract. You could use the sample Report Forms. This example is the same as using the sample Report Form CPUSUM.

```
Tran;#Tasks;Response Avg;Response Max;Dispatch Time Avg;User CPU Time Avg;Suspend Time Avg;QR CPU Time Avg;MS CPU Time Avg; . . .
CATA    ;       2;   .5038;   .5107;   .4635;   .1050;   .0403;   .0339;   .0711;Missing ;Missing ;   .0000;   .0000;   .0000
CATR    ;       2;   .3946;   .4069;   .2240;   .0281;   .1706;   .0058;   .0223;Missing ;Missing ;   .0000;   .0000;   .0000
CEMT    ;       2;  6.2161;  7.2793;  2.8673;   .7499;  3.3488;   .2549;   .4950;Missing ;Missing ;   .0000;   .0000;   .0000
CESD    ;       2;   .9081;   .9702;   .1021;   .0411;   .8061;   .0163;   .0249;Missing ;Missing ;   .0000;   .0000;   .0000
CEX2    ;       2; 1937.94; 1957.76;   .3062;   .0843; 1937.64;   .0582;   .0262;Missing ;Missing ;   .0000;   .0000;   .0000
CGRP    ;       2;  5.3068;  5.4980;   .4944;   .0608;  4.8124;   .0372;   .0236;Missing ;Missing ;   .0000;   .0000;   .0000
CLQ2    ;       2; 12.7568; 18.2664;   .6439;   .0430; 12.1129;   .0152;   .0278;Missing ;Missing ;   .0000;   .0000;   .0000
CLR2    ;       2;   .4497;   .4513;   .0131;   .0124;   .4366;   .0124;   .0000;Missing ;Missing ;   .0000;   .0000;   .0000
CPLT    ;       2;   .4568;   .5196;   .1276;   .0321;   .3291;   .0030;   .0290;Missing ;Missing ;   .0000;   .0000;   .0000
CQRY    ;       2;   .4066;   .4157;   .0955;   .0321;   .3110;   .0075;   .0246;Missing ;Missing ;   .0000;   .0000;   .0000
CRDB    ;       2;  2.8808;  3.5474;   .0676;   .0256;  2.8132;   .0108;   .0148;Missing ;Missing ;   .0000;   .0000;   .0000
CRDC    ;       2;   .3234;   .5345;   .2274;   .0243;   .0960;   .0096;   .0148;Missing ;Missing ;   .0000;   .0000;   .0000
CRDD    ;       2;   .3828;   .6006;   .0551;   .0241;   .3277;   .0098;   .0144;Missing ;Missing ;   .0000;   .0000;   .0000
CRDE    ;       2;   .3141;   .5208;   .0670;   .0369;   .2470;   .0227;   .0142;Missing ;Missing ;   .0000;   .0000;   .0000
CRD3    ;       2;   .5020;   .8081;   .0604;   .0229;   .4416;   .0078;   .0150;Missing ;Missing ;   .0000;   .0000;   .0000
```

Figure 88. Performance Summary Extract file

```
 V3R2M0                                                CICS Performance Analyzer
                                                          Performance Summary

EXPT0001 Printed at  2.43.23  7-24-2010     Data from 15.41.19  7-12-2010 to 16.19.15  7-12-2010                      Page  1
Transaction CICS TCB CPU Analysis - Summary

CPAOEX01 Extract has completed successfully
         Data Set Name . . . . CICSPA.SUMMARY.EXTRACT
         Record count  . . . .         41
```

Figure 89. Performance Summary Extract Recap report

Importing into Lotus 1-2-3

To import the extracted performance data into Lotus 1-2-3, follow these steps:

1. In 1-2-3, click the **Import** SmartIcon or choose **File - New.** 1-2-3 opens the File dialog box.
2. Select a text type of **Text - Delimited (*.TXT).**
3. Select the file to be opened. You might have to go to another folder or drive to find it.
4. Click **Open.** 1-2-3 displays the Text File Options dialog box.
5. Either click the option button **start a new column at each Semicolon** to indicate the character that separates the data fields, or type the separator character in the **Other characters** text box.
6. Click **OK.** After a few seconds of processing, 1-2-3 imports the data into records in the worksheet.

Importing into Lotus Approach

To import the extracted text file performance data set into Lotus Approach®, switch to the Approach Browse environment, and follow these steps:

1. In Approach, click the **Import** SmartIcon or choose **File - Import Data.** Approach opens the Import Data dialog box.
2. Select a text type of **Text - Delimited (*.TXT).**
3. Select the file to be imported. You might have to go to another folder or drive to find it.

4. Click **Import.** Approach displays the Text File Options dialog box.
5. Either click the option button to indicate the character that separates the data fields or type the separator character in the **Other** text box.
6. Place a checkmark in the **First Row Contains Field Names** checkbox. A checked checkbox is the default.
7. Click **OK.** Approach opens the Import Setup dialog box.
8. Drag the fields on the right side of the dialog box to match the related fields on the left side.
9. Click **OK.** After a few seconds of processing, Approach imports the data into records at the end of the file.
10. Edit the new records as needed.

Record Selection extract

The Record Selection Extract is a facility that allows you to create a small extract file containing only the records of interest to you. The extract file can then be used as input to CICS PA, allowing more efficient reporting.

The Record Selection Extract filters large SMF Files, writing only SMF records that match the following criteria:

- CICS, DB2, MQ, and Logger System Selection
- Selected record types, being any of:
  - Performance
  - Exception
  - Resource
  - Statistics
  - OMEGAMON
  - DB2
  - WebSphere MQ
  - System Logger
  - Identity
- Performance Selection Criteria
- Exception Selection Criteria
- Logger Selection Criteria
- Run-time SMF reporting interval

A Recap report containing processing statistics is always printed at the end of extract processing.

Extract command

The Record Selection extract can be requested from a Report Set in the CICS PA dialog. Select the **Record Selection** extract in the **Extracts** category.

In batch, the `RECORDSELECTION` or `RECSEL` command is used to request the Record Selection extract.

The command to create the default extract file is:

```
CICSPA RECSEL
```

or

```
CICSPA RECORDSELECTION
```

To tailor the extract file, specify extract options as follows:

```
[CICSPA APPLID(applid1,applid2,...)]
 CICSPA RECSEL(
             [OUTPUT(ddname),]
             [DDNAME(ddname),]
             [PERFORMANCE,]
             [EXCEPTION,]
             [RESOURCE,]
             [IDENTITY,]
             [STATISTICS,]
             [LOGGER,]
             [OMEGAMON,]
             [DB2,]
             [MQ,]
             [SSID(id1,id2,...),]
             [COMPRESS|NOCOMPRESS,]
             [SELECT(PERFORMANCE(INCLUDE|EXCLUDE(field1(value1),...),...),]
             [SELECT(EXCEPTION(INCLUDE|EXCLUDE(field1(value1),...),...))]
```

```
[SELECT(LOGGER(INCLUDE|EXCLUDE(field1(values1),...), ...))]
[LOGSTREAM('name.or.pattern'),]
[STRUCTURE('name.or.pattern'),])
```

Extract format

The extract file contains any of the following requested records:

- CMF performance, exception, resource, or identity class records (SMF 110, subtype 1)
- DB2 accounting records (SMF 101)
- MQ accounting records (SMF 116)
- Logger records (SMF 88)
- CICS statistics (SMF 110, subtype 2) and server statistics records (SMF 110, subtypes, 3, 4, and 5)
- CICS Transaction Gateway statistics records (SMF 111)
- OMEGAMON XE for CICS records (SMF 112)

Recap report

A Recap report is always produced at the end of extract processing.

```
 V3R2M0                                                CICS Performance Analyzer
                                                        Record Selection Extract

RSEL0001 Printed at 12:03:45  3/15/2011     Data from 15:41:28  7/12/2010 to 14:43:47  7/21/2010                  Page  1

CPAORS01 Extract has completed successfully
         Data Set Name   . . . . . CICSPA.RECSEL.EXTRACT
         Record Counts:
           Performance Dictionary  .           8
           Performance Class     . .         573
           Exception Class . . . . .           0
           Resource Class  . . . . .           0
           Identity Class  . . . . .           0
           Statistics  . . . . . . .           0
           DB2 Accounting  . . . . .         172
           MQ Accounting   . . . . .           0
           Logger  . . . . . . . . .           0
           OMEGAMON  . . . . . . . .           0
           CICS TG Statistics . . .            0
           SMF Records . . . . . . .          20
```

Figure 90. Record Selection extract (Recap report)

The report contains the following information:

RSEL0001
This is the DDname for the Recap output specified in the `OUTPUT(ddname)` operand. If not specified, the default is **RECSnnnn** where nnnn is **0001-9999** to uniquely identify it.

CPAORS01
This is the DDname of the extract data set specified in the `DDNAME(ddname)` operand. If not specified, the default is **CPA0RSEL.** The CICS PA dialog generates the DDnames **CPARSnn** where nn is the extract sequence number **01-99.**

Data Set Name
The is the name of the extract data set. Your usual CICS PA reporting can now occur using this data set as input.

Record Counts
The number of records written to the extract data set.

Performance Dictionary
The number of Dictionary records written.

Performance Class
The number of CMF performance class data records written. The

APPLID operand provides a filter on CICS generic APPLID. The SELECT(PERFORMANCE statement selects only those records with data fields that match the selection criteria. If these operands are not specified, then all CMF performance records are written.

Exception Class
The number of CMF exception class data records written. The APPLID operand provides a filter on CICS generic APPLID. The SELECT(EXCEPTION statement selects only those records with data fields that match the selection criteria. If these operands are not specified, then all CMF exception records are written.

Resource Class
The number of CMF performance class data records written. The APPLID operand provides a filter on CICS generic APPLID. The SELECT(PERFORMANCE statement selects only those records with data fields that match the selection criteria. If these operands are not specified, then all CMF resource class records are written.

Identity Class
The number of CMF identity class data records written. The APPLID operand provides a filter on CICS generic APPLID. The SELECT(PERFORMANCE statement selects only those records with data fields that match the selection criteria. If these operands are not specified, then all CMF identity class records are written.

Statistics
The number of CICS Transaction Server statistics records written. The APPLID operand provides a filter on CICS generic APPLID.

DB2 Accounting
The number of DB2 accounting records written. The SSID operand indicates that DB2 accounting data is required. Only records for DB2 Subsystems that match the ID or pattern are written. If the SSID operand is not specified, no DB2 accounting records are written.

MQ Accounting
The number of MQ accounting records written. The SSID operand indicates that MQ accounting data is required. Only records for WebSphere MQ Subsystems that match the ID or pattern are written. If the SSID operand is not specified, no MQ accounting records are written.

Logger
The number of MVS Logger records written. The LOGGER operand indicates that Logger records are required.

OMEGAMON
The number of OMEGAMON XE for CICS records written. The OMEGAMON operand indicates that OMEGAMON records are required.

CICS TG Statistics
The number of CICS Transaction Gateway statistics records written. The APPLID operand provides a filter on CICS Transaction Gateway APPLID.

SMF Records
The total number of SMF records written to the extract data set. There is only one Dictionary record per SMF record. There is only

one DB2 Accounting record per SMF record. However there can be many performance class records contained in one SMF record.

By comparing the numbers in the End of File Record Counts (see Figure 93 on page 229) and the Record Selection Extract report you can see the effect of filtering on the extract process.

HDB Load

The HDB Load is a facility that loads SMF data into a Historical Database (HDB). This same facility is available from Primary Menu option 5 Historical Database. However, from Report Sets you have the advantages of:

- Reports and HDB Load in the one job
- Multiple load requests supported in the one job
- One pass of the data

A Recap report containing processing statistics is always printed at the end of load processing.

HDB Load command

The HDB Load can be requested from a Report Set in the CICS PA dialog. Select **HDB Load** in the **Extracts** category.

In batch, the `HDB(LOAD(hdbname))` operand requests CICS PA to load CMF Performance or CICS Statistics data from SMF data sets into the specified HDB.

The command format is:

```
CICSPA HDB(LOAD(hdbname),
         [OUTPUT(ddname))]
```

where *hdbname* is the name of the HDB in the HDB Register identified in the JCL by DDname **CPAHDBRG** and *ddname* (default **HDBL0001**) identifies the Recap report output.

HDB format

The format of the HDB is as defined using Primary Menu option 5 Historical Database.

Recap report

Successful completion of the Load request generates a Recap report that provides information about the HDB Load, including a list of Container data sets created by the Load process.

```
 V3R2M0                                                CICS Performance Analyzer
                                                         HDB Load Recap Report

HDBL0001 Printed at 9:28:48 9/07/2010  Data from 09:02:00 8/07/2010 to 16:29:00 8/07/2010  Page  1


LOAD requested for HDB: CICSP1H   Register DSN: USER.CICSPA.HDB.REGISTER

The following Containers were created and loaded:
  Container DSN: JOHN.CICSP1H.D10219.T092846.HDB              No of Records: 54,567
    Start Time Stamp: 2010-08-07-09.00.00       End Time Stamp: 2010-08-07-16.00.00

LOAD process complete.
```

Figure 91. HDB Load Recap report

In this example, CICS PA created Container data set JOHN.CICSP1H.D10219.T092846.HDB for HDB CICSP1H. It contains 54,567 records for the period 9:00am to 4:00pm on August 7, 2010.

System Logger extract

A System Logger extract is created as a delimited text file for the purpose of importing System Logger (SMF 88) data into PC spreadsheet tools or database tools (such as DB2) for further detailed analysis and reporting. When transferred to a workstation file the extracted System Logger data is available to PC applications such as Lotus 1-2-3.

Extract command

The command format for the System Logger extract is:

```
CICSPA LOGGER(
            [OUTPUT(ddname),]
            [DDNAME(ddname),]
            [DELIMIT('field-delimiter'),]
            [LABELS|NOLABELS,]
            [FLOAT,]
            [SELECT(LOGGER(INCLUDE|EXCLUDE(field1(values1),...), ...))]
            [LOGSTREAM('name.or.pattern'),]
            [STRUCTURE('name.or.pattern'),])
```

Extract content

The following table describes the format of each line in the System Logger extract, including the extract labels (which occupy the first line of the extract, if you chose to include labels), the name of the original SMF 88 field, and the length of the data in the extract.

Table 20. System Logger extract content

Extract label	Field	Length	Description
RecType	SMF88PNM, SMF88STP	8	Concatenated value of field SMF88PNM (product name, SCLOG) and field SMF88STP (record subtype). For example, SCLOG01.
Interval Date	SMF88LTD	10	TOD-time when SMF global interval expired (from parameter list of ENF event 37, which requested this SMF record from logger). Time is reported in GMT. Appears in the extract as two separate fields: date (*yyyy-mm-dd*) and time (*hh.mm.ss*).
Interval Time		8	
Logstream name	SMF88LSN	26	Logstream name.
Structure name	SMF88STN	16	Name of structure used for this logstream.
MVSID	SMF88SID	4	MVS system ID.
MVS Level	SMF88OSL	8	MVS product level.
Group	SMF88GRP	8	GROUP value for this logstream. Either PROD (production) or TEST.
Flag	SMF88LFT, SMF88LDS	10	Values in the extract can be: **Staging** This log stream used staging data sets during the expiring SMF interval. **Disconnect** The SMF record has been generated when the logstream disconnected from the system. **Stag/Disc** Both of the above.
IXGWRIT Count	SMF88LWI	8	IXGWRITE invocations for this logstream issued during the expiring SMF interval.

Table 20. System Logger extract content (continued)

Extract label	Field	Length	Description
IXGWRIT BLOCKLEN Min	SMF88LIB	8	Minimum BLOCKLEN value of IXGWRITE seen during the expiring SMF interval. Initialized to X'7FFFFFFF' if no SMF activity occurs within the SMF interval.
IXGWRIT BLOCKLEN Max	SMF88LAB	8	Maximum BLOCKLEN value of IXGWRITE seen by this log stream during the expiring SMF interval Initialized to zero if no SMF activity occurs within the SMF interval.
IXGWRIT Bytes Requested	SMF88LWB	8	Bytes REQUESTED by user application(s) on IXGWRITE invocations for this log stream during the expiring SMF interval (format: long floating point).
IXGWRIT Bytes Written	SMF88LDB	8	Count of bytes written to DASD during the expiring SMF interval (format: long floating point). SMF88LDB = SMF88SAB + storage-for-LOGGR-internal-requirements (ex, rounding, internally-required control information.)
DASD Writes	SMF88LIO	8	Number of times a request was made by System Logger to write logstream data to DASD during the expiring SMF interval.
DASD Write Waits	SMF88LIS	8	Number of times System Logger had to suspend before writing logstream data to DASD because a previously initiated write to DASD had not yet completed during the expiring SMF interval.
DASD Shifts	SMF88EDS	8	Number of logstream DASD-shifts initiated by this system during the expiring SMF interval.
Struct Rebuilds Initiated	SMF88ERI	8	Number of Structure Rebuild events initiated for this logstream during the expiring SMF interval.
Struct Rebuilds Completed	SMF88ERC	8	Number of Structure Rebuild events completed for this logstream during the expiring SMF interval.
Struct Full	SMF88ESF	8	Number of times Logger detected “Structure full” condition for this logstream on this system during the expiring SMF interval.
Staging Threshold	SMF88ETT	8	Number of times IXGLOGR detected “Staging-Dataset-Threshold-Hit” condition for this logstream on this system during the expiring SMF interval.
Staging Full	SMF88ETF	8	Number of times IXGLOGR detected “Staging-Dataset-FULL” condition for this logstream on this system during the expiring SMF interval.
Offloads	SMF88EO	8	Number of times IXGLOGR performed successful offload (>1 byte of data) for this logstream on this system during the expiring interval
Entry Full	SMF88EFS	8	Number of times IXGLOGR performed an offload for all the logstreams connected on this system to the structure due to the structure's total in-use list entries reaching 90% of the total available entries for the structure. This count is the number of occurances of this condition for the expiring interval.
Demand Offloads	SMF88EDO	8	Number of times a demand initiated offload was requested (via IXGOFFLD) for this logstream on this system during the expiring interval.
Staging DS Async Buf Full	SMF88EAF	8	Number of times IXGLOGR detected “Staging-Dataset-Async-Buffer_Full” condition for this logstream on this system during the expiring SMF interval.
Written Bytes	SMF88SWB	8	Current WRITTEN-Bytes-Structure. Count of bytes written to interim storage for this logstream for this interval (format: long floating point).

Table 20. System Logger extract content (continued)

Extract label	Field	Length	Description
Instead Bytes	SMF88SIB	8	Current INSTEAD-Bytes count. Count of bytes deleted from interim storage during this interval INSTEAD OF being moved to DASD (format: long floating point). This field is only incremented due to user ?IXGDELET invocations when the data had not yet been migrated from interim storage to DASD.
After Bytes	SMF88SAB	8	Current AFTER-Bytes count. Count of bytes deleted from interim storage during this interval AFTER being moved to DASD (format: long floating point). This field is only incremented due to LOGGR internal management of interim storage.
Instead Count	SMF88SII	8	Current INSTEAD-Invoc count. Count of times a deletion from interim storage was performed during this interval, where the data was NOT first migrated to DASD.
After Count	SMF88SAI	8	Current AFTER-Invoc count. Count of times a deletion from interim storage was performed during this interval, AFTER being migrated to DASD (occurs due to LOGGR management of interim storage.)
Type-1 Completions	SMF88SC1	8	Count of type-1 completions during the expired SMF interval. Logstream contents can remain in interim storage. No need to move data from interim storage to DASD.
Type-2 Completions	SMF88SC2	8	Count of type-2 completions during the expired SMF interval. Logstream is filling interim storage but space is not critical. Logger must move data from interim storage to DASD.
Type-3 Completions	SMF88SC3	8	Count of type-3 completions during the expired SMF interval. Space used in interim storage (by this logstream) is critical but does not exceed 100 percent. Undefined for DASDONLY logstreams.

The CICS PA Sample Library (SCPASAMP) contains sample JCL members for loading a System Logger extract into DB2:

CPALGDDL
DDL to define a DB2 table for the System Logger extract data

CPALGLOD
DB2 Load Utility statements to load the System Logger extract data into a predefined DB2 table

Statistics extract

A Statistics Extract is created as a delimited text file for the purpose of importing the statistics into PC spreadsheet or database tools for further detailed analysis and reporting.

Extract command

The Statistics extract can be requested from a Report Set in the CICS PA dialog. Select the **Statistics** extract in the **Extracts** category.

In batch, the `EXTRACTSTATISTICS` command is used to request the Statistics extract:

```
CICSPA EXTRACTSTATISTICS(
                        [OUTPUT(ddname),]
                        [DELIMIT('field-delimiter'),]
                        [LABELS|NOLABELS,]
                        [TYPE(EOD,INT,USS,REQ,RRT),]
                         STTSxxxx(ddname)|STTGxxxx(ddname),...)
```

The STTSxxxx and STTGxxxx operands specify the CICS Transaction Server (TS) or CICS Transaction Gateway (TG) statistics that you want to extract, where xxxx is the statistics ID. For example, specify STTS010A(TS010A01) to extract Transaction Manager statistics (ID: 010A) to the data set specified in the DD statement TS010A01.

The format of the extract records depends on the statistics ID of the extracted data: each statistics ID defines its own set of fields.

Chapter 10. End of processing reports

Two reports are always produced at the end of CICS PA batch reporting to provide summary processing statistics:

- "Dispatcher Tables Summary report"
- "End of File Record Counts report" on page 229

Dispatcher Tables Summary report

The Dispatcher Tables Summary Report provides a summary of the processing performed by CICS PA. It can provide valuable information for problem determination. If no records are being processed for your requested reports and extracts, there is an excellent chance that the Dispatcher Tables Summary provides all the information needed to resolve the problem.

Report command

The report is automatically produced before report and extract processing. It cannot be explicitly requested.

Report content

```
 V3R2M0    07:49:07  3/12/2010                  CICS Performance Analyzer
                                                Dispatcher Tables Summary

SMF File    Off PreScan   Routine   Output       EOF     ParmName  Codes
SMFIN001+    4  CPAPRSMF  CPALSTMF  LIST0001      Y      LIST0001  31
                          CPALSXMF  LSTX0001      Y      LSTX0001  31
                          CPASUMMF  SUMM0001      Y      SUMM0001  31
                          CPAFNLMF  TOTL0001      Y      TOTL0001  31
                          CPATRUMF  RESU0001      Y      RESU0001  31,35

SMFIN002     4  CPAPRSMF* CPALOGMF* LOGR0002      Y      LOGR0002  58

SMFIN003     4  CPAPRSMF  CPADB2MF  DB2R0003      Y      DB2R0001  31,65

SMFIN004+    4  CPAPRSMF* CPAMROMF* CROS0001*     Y      CROS0003  31
                          CPAMROMF* CROS000M*     Y      CROS0004  31
                          CPAMROMF* CROS0001*     Y      CROS0005  31
                          CPAMROMF* CROS000M*     Y      CROS0006  31
                          CPAMROMF* CROS0001*     Y      CROS0007  31
                          CPAMROMF* CROS000M*     Y      CROS0008  31
```

Figure 92. Dispatcher Tables Summary report

The Dispatcher Tables Summary as shown in Figure 92 contains the following information:

SMF File
The DDname of the SMF input file, followed by a plus (+) sign if more than one DDname was specified in the `INPUT` operand.

Off
This is the offset into the data record that the CICS PA scan program uses to determine whether or not the record should be processed.

PreScan
The CICS PA module name that pre-processes each CMF record before they are passed to the record processors.

Routine
This is the name of the record processing module. Each specification of the program causes a separate use of the module. However, only one copy of the module is loaded.

Output
The output file DDname that was either specified in the `OUTPUT` operand or assigned by CICS PA. The name is followed by a **(NO)** if the file failed to open. It can also be followed by a **(DY)** if the file is a DUMMY data set.

EOF
A **Y** in this column indicates that the record processor is invoked at End of File of the input file.

ParmName
This name is assigned by CICS PA to uniquely identify each invocation of a record processing module.

Codes
This field represents the CMF record codes which are checked at the offset location (**Off**) in the data record.

An asterisk (*) next to the PreScan routine, Record Processing routine or Output DDname signifies that this entry has been used by a previous report. Try to avoid reusing Output DDnames, as the report output might be merged or difficult to distinguish.

End of File Record Counts report

The End of File Record Counts report provides a summary of the input records processed. It can provide valuable information for problem determination.

Report command

The report is automatically produced at the end of report and extract processing. It cannot be explicitly requested.

Report content

```
V3R2M0    16:26:54  7/23/2010                        CICS Performance Analyzer
                                                     End of File Record Counts

                          DDname    RecID          Record Type          Count     Pct of Total
                         SMFIN001+  X'30'     Performance Dictionary         18        0.06%
                                    X'31'     Performance Class           1,277        4.29%
                                    X'35'     Resource Usage                306        1.02%
                                    X'51'     CICS Statistics            26,829       90.13%
                                    X'58'     MVS System Logger             733        2.46%
                                    X'65'     DB2 Accounting                304        1.02%
                                    X'74'     MQ Accounting                 305        1.02%
                         SMFIN001+  Total                                29,772      100.00%
                                    Total     SMF Records                 2,092
                         SMFIN002   X'30'     Performance Dictionary          3        0.04%
                                    X'31'     Performance Class             250        3.18%
                                    X'51'     CICS Statistics             7,596       96.73%
                                    X'54'     CICS Server Statistics          4        0.05%
                         SMFIN002   Total                                 7,853      100.00%
                                    Total     SMF Records                 3,419
                         SMFIN003   X'30'     Performance Dictionary          3        0.01%
                                    X'31'     Performance Class             126        0.22%
                                    X'41'     Exception Class                 8        0.01%
                                    X'51'     CICS Statistics            57,294       99.76%
                         SMFIN003   Total                                57,431      100.00%
                                    Total     SMF Records                 2,462
```

Figure 93. End of File Record Counts report

The information shown in the End of File Record Counts report in Figure 93 is:

DDname
This is the name associated with the SMF input file.

RecID
This is the hexadecimal ID of each SMF record in the input data set. This value was found at the offset (**Off**) shown in the Dispatcher Tables Summary. The Record ID values are:

X'30' CMF performance class dictionary
X'31' CMF performance class data
X'35' CMF transaction resource class data
X'36' CMF identity class data
X'41' CMF exception class data
X'51' CICS statistics data
X'52' CICS temporary storage server statistics data
X'53' CICS coupling facility data table server statistics data
X'54' CICS named counter server statistics data
X'58' MVS System Logger data
X'65' DB2 Accounting data
X'6F' CICS Transaction Gateway statistics data
X'70' OMEGAMON XE for CICS data
X'74' MQ Accounting data

Record Type
This is the name associated with the record type defined in the **RecID** field.

"Total SMF Records" is the total number of SMF records in the input file.

Count
This is a count of the number of records of the particular type in the input file.

The **"Total SMF Records"** is usually different from the **"100% Total"** because the one SMF record can contain many CMF performance class records.

Pct of Total
This value represents the percentage of the records of the specified type against the total number of records in the file.

Part 3. Historical Database reports and extracts

These topics describe the reports that you can create from a Historical Database (HDB).

In addition, but not described here, CICS PA provides a Historical Database Export facility to export HDB data to DB2 tables. For more information on Historical Database facilities and creating HDB export data sets, see the *CICS PA User's Guide*.

Chapter 11. Historical Database (HDB)

CICS PA Historical Database (HDB) is a repository of SMF data related to CICS system performance.

CICS PA Historical Database builds a history of transaction activity from your CMF performance class data (“Performance HDB”), and a history of CICS statistics and server statistics data and CICS Transaction Gateway statistics data (“Statistics HDB”), that can be customized to meet your various reporting requirements. Your Historical Database environment is controlled from the CICS PA ISPF dialog. It provides a fully managed environment from where you can control all aspects of CICS performance data and CICS statistics data, including collection and reporting.

Initially, your HDB environment requires a minimal one-time setup. On the Historical Database Menu, specify the name of the **HDB Register.** This is a VSAM KSDS where HDB definitions are saved.

The Historical Database Menu provides a pathway to the eight steps for defining and using HDBs:

1. **Template.** (Performance HDB only, not applicable to Statistics HDB)

   Defining a Performance HDB is a two step process: first define a Template and then define an HDB based on that Template. The Template identifies which CMF performance class fields to be kept in the HDB.
2. **Definition.**

   After the Template is defined, then define the HDB and its options, such as the characteristics of the HDB data sets and the retention period of the data.
3. **Load.**

   Loading data into the HDB is performed by the standard CICS PA batch reporting utility. The command that requests the utility to load an HDB is:

   ```
   HDB(LOAD(...
   ```

   CICS PA reads the SMF data and builds the HDB data sets. Because the HDB Load process is part of the normal batch reporting process, you can run CICS PA reports and load HDBs together with a single pass of the SMF data.
4. **Report.**

   Performance HDB reporting is performed by the standard CICS PA batch reporting utility. The command that requests the utility to report against a Performance HDB is:

   ```
   HDB(REPORT(...
   ```

   You can tailor Performance HDB reporting by using a Report Form. This allows you to select which fields in the HDB are reported and how they are presented.

   Statistics HDB reporting is done interactively using the CICS PA dialog.

   Statistics HDB Alert reporting, which alerts you when statistics field values meet specified conditions, is performed by the batch reporting utility. The command that requests the utility to generate a Statistics Alert report against a Statistics HDB is:

   ```
   HDB(STATSALERT(...
   ```

   Before requesting a Statistics Alert report, you must use the CICS PA dialog to create a Statistics Alert Definition.

5. **Export.**

   Export allows you to load HDB data into a DB2 table. CICS PA automates this process with two simple steps:

   a. First define the DB2 table to house the data. CICS PA generates JCL to do this for you by creating the necessary DDL to define the table.
   b. Then load the data into the table. CICS PA generates JCL to do this for you by creating the necessary DB2 Load Utility statements to load the data.

6. **Extract.**

   The HDB Extract facility allows you to export data from your HDB data sets to an extract data set in CSV format, suitable for import into PC-based spreadsheet applications for further analysis.

7. **Maintain.**

   HDB maintenance allows you to change your HDB definition and manage the HDB container data sets.

8. **Housekeeping.**

   HDB housekeeping should be run periodically to clean-up your HDB environment. Housekeeping performs two tasks:

   a. Deletes HDB container data sets that have expired.
   b. Removes definitions from the HDB Register that are no longer required.

Batch processes are associated with four of these steps:

Step 3 on page 233 Load HDB
Step 4 on page 233 HDB reporting
Step 6 HDB extract to CSV
Step 8 HDB housekeeping

This chapter presents the commands and sample output for these batch processes.

HDB Load

Option 3 **Load** from the Historical Database Menu is where you request to generate JCL to load historical performance data (List or Summary) or Statistics data into your HDB.

HDB Load command

The **HDB(LOAD)** operand requests CICS PA to load CMF performance or CICS statistics data from SMF data sets into an HDB.

The command format is:

```
CICSPA HDB(LOAD(hdbname)
        [,OUTPUT(ddname)])
```

The options are:

LOAD
: Specifies the name of the HDB to be loaded. The HDB must be defined in the HDB Register (DDname **CPAHDBRG**).

OUTPUT
: DDname for the Recap report output. CICS PA records the results of the Load operation in this File. If not specified, CICS PA assigns a DDname of **HDBLnnnn** where nnnn is the numerical sequence number **0001-9999.**

HDB Load Recap report

Successful completion of the Load request generates a Recap report that provides information about the HDB Load, including a list of Container data sets created by the Load process.

```
 V3R2M0                                                CICS Performance Analyzer
                                                         HDB Load Recap Report

HDBL0001 Printed at 9:28:48 9/07/2010  Data from 09:02:00 8/07/2010 to 16:29:00 8/07/2010  Page  1


LOAD requested for HDB: CICSP1H   Register DSN: USER.CICSPA.HDB.REGISTER

The following Containers were created and loaded:
  Container DSN: JOHN.CICSP1H.D10219.T092846.HDB             No of Records: 54,567
    Start Time Stamp: 2010-08-07-09.00.00       End Time Stamp: 2010-08-07-16.00.00

LOAD process complete.
```

Figure 94. HDB Load Recap report

In this example, CICS PA created Container data set JOHN.CICSP1H.D10219.T092846.HDB for HDB CICSP1H. It contains 54,567 records for the period 9:00am to 4:00pm on August 7, 2010.

Performance HDB Reporting

Option 4 **Report** from the Historical Database Menu is where you request to run reports against your Performance HDB.

There are two types of Performance HDB report:

List A LIST HDB contains data records for individual transactions. Typically, List HDB reports are used for the detailed analysis of recent transaction events and the data typically has a short life span (retention).

Summary
A SUMMARY HDB contains data records that summarize transaction activity over a specified time interval. Typically, Summary HDB reports are used for long-term trend analysis and capacity planning.

HDB Report command

The **HDB(REPORT)** operand requests CICS PA to generate reports from HDB data. The command applies to both List and Summary HDBs.

The command format is:

```
CICSPA HDB(REPORT(hdbname),
          [OUTPUT(ddname),]
          [TOTALS(n)|NOTOTALS,]
          [INTERVAL(hh:mm:ss),]
          [FIELDS(field1[(options)],...),]
          [LINECount(nnn),]
          [SELECT(PERFORMANCE(INCLUDE|EXCLUDE(field1(values1),...),...)),]
          [SELECT2(PERFORMANCE(INCLUDE|EXCLUDE(field1(values1),...),...))])
```

The options are:

REPORT
Specifies the name of the HDB to report against. The HDB must be defined in the HDB Register (DDname **CPAHDBRG**).

OUTPUT
DDname for the report output. If not specified, CICS PA assigns a

DDname in the format **HDBRnnnn** where nnnn is the report sequence number **0001-9999** to uniquely identify the output.

NOTOTALS | TOTALS(n)
The totals level applies only to the Summary report.

Specify TOTALS(1) to TOTALS(8) to accumulate subtotals for up to 8 sort fields, print the subtotals when the sort field changes, and print a grand total at the end of the report. Default: **TOTALS(8)**

Specify TOTALS(0) for no subtotals, but print only the grand total.

Specify NOTOTALS for neither subtotals nor grand total.

INTERVAL
Specify an optional Time Interval when reporting Summary HDBs. The default is the Time Interval used to create the data (as defined in the Template). In our example, Template PRODSUM used to create the HDB data specified 15 minutes.

You can specify any interval greater than or equal to the Template Interval. For example, if you are reviewing many days worth of data then you might specify 24:00:00 (24 hours) so that you can view the daily trend. In the example above, the Interval has been changed to 1 hour.

FIELDS
Specifies which fields are reported, the order in which they appear in the report, and their summarization presentation. Only fields that are specified in the HDB Template can be specified. Fields not contained in the HDB are reported as **Missing**.

LINECount
Controls the number of lines per page in the HDB report.

SELECT, SELECT2
Specifies what data to include or exclude from the report based on data field values.

SELECT and SELECT2 can both be specified to perform record filtering. The CICS PA dialog generates SELECT2 statements in the command deck when you use a Report Form that has active Selection Criteria. If both SELECT and SELECT2 are specified, then the record must pass selection by both specifications for it to be included in the report.

HDB List report

The HDB List report is produced from a List HDB.

The following report shows the HDB List report for a default List HDB (uses the default List Template). The report was generated by the command:

```
CICSPA HDB(OUTPUT(HDBR0001),REPORT(HDBLIST1))
```

```
 V3R2M0                                                  CICS Performance Analyzer
                                                         Historical Database List

HDBR0001 Printed at 12:03:45 8/15/2010    Data from 15:41:28  8/07/2010

 Start        MVS  APPLID   Tran Userid   Program    TaskNo Response Dispatch User CPU  Suspend DispWait  FC Wait   FCAMRq  IR Wait
 Time                                                        Time     Time     Time     Time     Time     Time              Time
 15:41:28.649 P390 CICS53A1 CPLT CICSUSER DFHSIPLT        6    .5196    .1771    .0316    .3425    .3422    .0000        0    .0000
 15:41:29.598 P390 CICS53A1 CSSY CICSUSER DFHAPATT       15    .4595    .0036    .0033    .4558    .0000    .0000        0    .0000
 15:41:29.604 P390 CICS53A1 CSSY CICSUSER DFHAPATT       16    .9663    .0069    .0088    .9594    .0795    .0000        0    .0000
 15:41:29.610 P390 CICS53A1 CSSY CICSUSER DFHAPATT       17   4.0131    .1379    .0311   3.8752   1.7449    .0000        0    .0000
 15:41:29.570 P390 CICS53A1 CSSY CICSUSER DFHAPATT       12   4.2133    .1621    .0494   4.0511   2.5906    .0000        0    .0000
 15:41:29.191 P390 CICS53A1 CGRP CICSUSER DFHZCGRP       11   5.1156    .1956    .0603   4.9199   1.9401    .0000        0    .0000
 15:41:29.591 P390 CICS53A1 CSSY CICSUSER DFHAPATT       14   4.7978    .1880    .0652   4.6098   2.3487    .0000        0    .0000
 15:41:29.178 P390 CICS53A1 CSSY CICSUSER DFHAPATT       10   5.2738   1.4746    .2259   3.7992    .6720    .0000        0    .0000
 15:41:29.177 P390 CICS53A1 CSSY CICSUSER DFHAPATT        9   5.3366    .7647    .1494   4.5719   1.6657    .0000        0    .0000
 15:41:29.590 P390 CICS53A1 CSSY CICSUSER DFHAPATT       13   5.2787    .7009    .1740   4.5778   2.0694    .0000        0    .0000
 15:42:24.011 P390 CICS53A1 CLQ2 CICSUSER DFHLUP         19   7.2473    .2907    .0416   6.9566   1.9555    .0000        0   3.7840
 15:41:29.172 P390 CICS53A1 CSSY CICSUSER DFHAPATT      III  74.6388  48.6230  18.0249  26.0158   7.7521    .6756     1506    .0000
 15:42:43.395 P390 CICS53A1 CLR2 CICSUSER DFHLUP         20    .4513    .0130    .0128    .4383    .0215    .0000        0    .4363
```

Figure 95. HDB List report

The fields in the default report are the fields defined in the default List Template (in order). Customized wider reports can generated by using a Report Form.

You can use a List Report Form to tailor the report or to report other fields in the HDB.

The HDB List report is very similar to the Performance List report (see Figure 2 on page 21).

HDB Summary report

The HDB Summary report is produced from a Summary HDB.

The following report shows the HDB Summary report for a default Summary HDB (uses the default Summary Template). The report was generated by the command:

```
CICSPA HDB(OUTPUT(HDBR0001),REPORT(HDBSUMM1))
```

```
 V3R2M0                                                  CICS Performance Analyzer
                                                         Historical Database Summary

HDBR0001 Printed at 12:03:45 8/15/2010     Data from 15:41:00 8/07/2010 to 16:19:00 8/07/2010

                                                 Avg      Avg      Avg      Avg      Avg      Avg      Avg      Avg      Avg
 Start            MVS  APPLID   Tran   #Tasks Response Dispatch User CPU  Suspend DispWait  FC Wait   FCAMRq  IR Wait SC24UHWM
 Interval                                            Time     Time     Time     Time     Time     Time              Time
 2010/08/07 15:41 P390 CICS53A1 CGRP        1   5.1156    .1956    .0603   4.9199   1.9401    .0000        0    .0000        0
 2010/08/07 15:41 P390 CICS53A1 CPLT        1    .5196    .1771    .0316    .3425    .3422    .0000        0    .0000        0
 2010/08/07 15:41 P390 CICS53A1 CSSY        9  11.6642   5.7846   2.0813   5.8796   2.1025    .0751      167    .0000        0
 2010/08/07 15:41 P390 CICS53A1            11  10.0557   4.7668   1.7113   5.2890   1.9277    .0614      137    .0000        0
 2010/08/07 15:41 P390 CICS53T1 CGRP        1   5.4980    .7931    .0613   4.7049   3.7141    .0000        0    .0000        0
 2010/08/07 15:41 P390 CICS53T1 CPLT        1    .3939    .0782    .0325    .3158    .3149    .0000        0    .0000        0
 2010/08/07 15:41 P390 CICS53T1 CSSY        9  11.1753   5.7900   2.0359   5.3853   2.5363    .2112      167    .0000        0
 2010/08/07 15:41 P390 CICS53T1            11   9.6790   4.8164   1.6743   4.8626   2.4415    .1728      137    .0000        0
 2010/08/07 15:41 P390                     22   9.8674   4.7916   1.6928   5.0758   2.1846    .1171      137    .0000        0
 2010/08/07 15:41                          22   9.8674   4.7916   1.6928   5.0758   2.1846    .1171      137    .0000        0
```

Figure 96. HDB Summary report

The fields in the default report are the fields defined in the default Summary Template (in order). Fields that cause the report to exceed the maximum page width are not reported. If no Report Form is specified, all fields in the HDB are reported to the maximum page width of 8000 characters. The report can be customized by specifying a Report Form.

You can use a Summary Report Form to tailor the report or to report other fields in the HDB.

The HDB Summary report is very similar to the Performance Summary report (see Figure 16 on page 38):

- The key fields are reported in the left hand columns.
- The Task count (**#Tasks** or **#TTasks**) is the number of CICS transactions (tasks) that ran in the report interval. Specify one or both. The first one specified is used in the statistical calculations.
- The HDB statistics are reported to the right of the key fields.
- Maximum and minimum values will not be reported because they cannot be accurately determined from the summarized data.

Statistics HDB Reporting

You can request to run reports against your Statistics HDB from either: option 4 **Report** from the Historical Database Menu; or option 7 **Statistics** from the Primary Option Menu, and then option 3 **Historical Databases...**. A Statistics HDB contains data records from CICS Statistics class SMF records and CICS Transaction Gateway statistics SMF records.

There are two types of Statistics HDB report:

Online reports
Rather than generating a batch report, you view Statistics HDB data interactively using the CICS PA dialog. For details, see Chapter 12, "Statistics reporting using the dialog," on page 247.

Statistics Alert HDB reports
These batch reports alert you when data records in a Statistics HDB meet conditions that you have specified in a Statistics Alert definition. For details, see "Statistics Alert HDB Reporting."

Statistics Alert HDB Reporting

Statistics Alert HDB reporting produces Statistics Alert reports from statistics HDB data.

The **HDB(STATSALERT)** operand requests CICS PA to generate Statistics Alert reports from statistics HDB data.

The command format is:

```
CICSPA HDB(STATSALERT(hdbname),
           [OUTPUT(ddname),]
           [EXTERNAL(ddname),]
           STALTDEF(statistics-alert-definition),
           [BY(APPLID[(LIST,SUMMARY)]|
               ALERT[(LIST,SUMMARY)]|
               COLLECT|
               INTERVAL|
               RESOURCE),]
           [TYPE(EOD,INT,USS,REQ,RRT)]
```

Except for the STATSALERT operand itself (which specifies the statistics HDB to be used), the options are the same as the options for the CICS PA STATSALERT operand to generate Statistics Alert reports from SMF data. For details, see "Report command" on page 133.

HDB Export

Option 5 **Export** from the Historical Database Menu is where you request to export data from your HDB into DB2 tables.

CICS PA automates this process with two simple steps:

1. First define the DB2 table to house the data. CICS PA generates JCL to do this for you by creating the necessary DDL to define the table.
2. Then load the data into the table. CICS PA generates JCL to do this for you by creating the necessary DB2 Load Utility statements to load the data.

For more information on using the dialog, see the *CICS Performance Analyzer for z/OS User's Guide*.

For more information on working with DB2, see the *DB2 UDB for z/OS Administration Guide*.

HDB Extract

The HDB Extract facility allows you to export data from your HDB data sets to an extract data set in CSV (comma separated values) format, suitable as input into PC-based spreadsheet applications.

Option 6 **Extract** from the Historical Database Menu is where you request to run extracts to CSV from your HDB.

There are three types of HDB extracts:

1. **List**

   A List HDB contains data records for individual transactions. Typically, List HDB extracts are used for the detailed analysis of recent transaction events and the data typically has a short life span (retention).
2. **Summary**

   A Summary HDB contains data records that summarize transaction activity over a specified time interval. Typically, Summary HDB extracts are used for long term trend analysis and capacity planning.
3. **Statistics**

   A Statistics HDB contains collections of CICS statistics and server statistics data and CICS Transaction Gateway statistics data over a specified time interval.

HDB Extract command

The **HDB(EXTRACT)** operand requests CICS PA to generate extract data sets from HDB data.

The command format is:

```
CICSPA HDB(EXTRACT(hdbname),
          [OUTPUT(ddname),]
          [DDNAME(ddname),]
          [INTERVAL(hh:mm:ss),]
          [DELIMIT('field-delimiter'),]
          [LABELS|NOLABELS,]
          [NOFLOAT|FLOAT,]
          [FIELDS(field1[(options)],...),]
          [SELECT(PERFORMANCE(INCLUDE|EXCLUDE(field1(values1),...),...)),]
          [SELECT2(PERFORMANCE(INCLUDE|EXCLUDE(field1(values1),...),...))])
```

The options are:

EXTRACT
The name of the HDB. The HDB must be defined in the HDB Register (DDname **CPAHDBRG**).

OUTPUT
DDname for the Recap report output. The CICS PA dialog assigns the default DDname **HXTS0001.**

DDNAME
DDname for the extract data set. The CICS PA dialog assigns the default DDname **HDBX0001.**

INTERVAL
Applicable to Summary HDBs. Optionally, specify the time interval for summarizing transaction activity. The default is the Time Interval used to create the data (as defined in the Template).

You can specify any interval greater than or equal to the Template Interval in the range 00:00:01 (1 second) to 24:00:00 (24 hours). For example, if you are reviewing many days worth of data then you might specify 24:00:00 so that you can analyze the daily trend.

DELIMIT
The field delimiter used to separate each data field in the extract records. Note that the specified delimiter is enclosed in quotes. The default field delimiter is a semicolon (**;**).

CICS PA extracts the data values from the HDB records, formats them, and then adds a field delimiter after each field.

LABELS | NOLABELS
LABELS indicates that the first record to be written to the extract data set is to be a field labels record. This is the default.

NOLABELS indicates that you do not want field labels written.

FLOAT | NOFLOAT
Specify FLOAT format to write numeric fields to the extract data set in S390 FLOAT format. This is necessary if you plan to import the extract into a DB2 table. When the DB2 Load Utility is used, it will interpret all numerical fields reliably and consistently in FLOAT format.

If FLOAT is not specified, the numeric fields are written in a mixture of integer, real and exponential using character digits. This is the default and is suitable when importing the extract data into a PC spreadsheet tool.

FIELDS
Specifies which fields are exported to the extract data set, the order in which they appear in the extract record, and their summarization presentation. If any of the requested data fields were not collected in the HDB, a message is issued and the field in the extract record contains blanks (List HDB) or **Missing** (Summary HDB).

SELECT, SELECT2
Specifies what data to include or exclude from the extract based on data field values.

SELECT and SELECT2 can both be specified to perform record filtering. The CICS PA dialog generates SELECT2 statements in the command deck when you use a Report Form that has active Selection Criteria. If both

SELECT and SELECT2 are specified, then the record must pass selection by both specifications for it to be included in the report.

HDB Extract record format

The format of the HDB Extract record is determined by the particular HDB and the run time options. Here are some examples. Each field in the record is separated by a text file field delimiter, which by default is a semicolon (**;**). Optionally, the first record contains the field labels.

```
Start Time;MVS;APPLID;Tran;Userid;Program;TaskNo;Response Time;Dispatch Time;User CPU Time;Suspend Time;DispWait Time; . . .
07:41:29.998;MV2C;IYK3Z4  ;CSSY;CICSUSER;DFHAPATT;      17;   .1413;   .0708;   .0082;   .0705;   .0680;   .0000;
07:41:29.995;MV2C;IYK3Z4  ;CSSY;CICSUSER;DFHAPATT;      14;   .2025;   .0195;   .0022;   .1830;   .1808;   .0000;
07:41:29.995;MV2C;IYK3Z4  ;CSSY;CICSUSER;DFHAPATT;      11;   .3219;   .0658;   .0096;   .2562;   .2487;   .0000;
07:41:29.995;MV2C;IYK3Z4  ;CSSY;CICSUSER;DFHAPATT;      12;   .4355;   .0976;   .0116;   .3379;   .2886;   .0000;
07:41:29.999;MV2C;IYK3Z4  ;CSSY;CICSUSER;DFHAPATT;      19;   .4625;   .0669;   .0056;   .3956;   .3856;   .0000;
07:41:29.999;MV2C;IYK3Z4  ;CSSY;CICSUSER;DFHAPATT;      18;   .5860;   .0998;   .0071;   .4862;   .4820;   .0000;
07:41:29.997;MV2C;IYK3Z4  ;CSSY;CICSUSER;DFHAPATT;      16;   .7682;   .1838;   .0131;   .5844;   .5694;   .0000;
07:41:29.995;MV2C;IYK3Z4  ;CGRP;CICSUSER;DFHZCGRP;      13;   .8097;   .0244;   .0026;   .7852;   .7827;   .0000;
```

Figure 97. List HDB Extract file

```
Start Date;Start Time;MVS;APPLID;Tran;#Tasks;Response Time Avg;Dispatch Time Avg;User CPU Time Avg;Suspend Time . . .
2010/12/15 15:00:00;MV2C    ;IYK3ZAC1;CSHQ    ;       1;55155.62;   .2103;   .0212;55155.41;   .0331;   .0001;
2010/12/15 15:00:00;MV2C    ;IYK3ZAC1;CSNC    ;       1;55159.06;   .3379;   .0041;55158.72;   .0356;   .0001;
2010/12/15 15:00:00;MV2C    ;IYK3ZAC1;CSNE    ;       1;55153.97;   .0881;   .0060;55153.88;   .0042;   .0001;
2010/12/15 18:00:00;MV2C    ;IYK2ZFV1;CEX2    ;       1;50237.83;   .5030;   .2717;50237.33;   .1800;   .0001;
2010/12/15 18:00:00;MV2C    ;IYK2ZFV1;CSHQ    ;       1;50234.95;   .3105;   .0190;50234.64;   .5761;   .0001;
2010/12/15 18:00:00;MV2C    ;IYK2ZFV1;CSNC    ;       1;50393.54;   .4259;   .0058;50393.12;   .0026;   .0001;
2010/12/15 18:00:00;MV2C    ;IYK2ZFV1;CSNE    ;       1;50389.87;   .1321;   .0177;50389.74;   .0074;   .0001;
2010/12/15 18:00:00;MV2C    ;IYK2ZFV2;CEX2    ;       1;50241.24;   .2630;   .1828;50240.98;   .2255;   .0001;
2010/12/15 18:00:00;MV2C    ;IYK2ZFV2;CKAM    ;       1;50239.91;   .0875;   .0044;50239.82;   .0522;   .0001;
2010/12/15 18:00:00;MV2C    ;IYK2ZFV2;CSHQ    ;       1;50238.49;   .3122;   .0197;50238.18;   .8023;   .0001;
2010/12/15 18:00:00;MV2C    ;IYK2ZFV2;CSNC    ;       1;50248.39;   .4899;   .0051;50247.90;   .0064;   .0001;
```

Figure 98. Summary HDB Extract file

```
CPA.STAT01.STAT060A

Start Time;APPLID;MVSID;Global_Statistics_Length;CICS_TCB_MODEs;CICS_TCB_POOLs;Current_ICV_Time;C . . .
2010-02-16-07.39.30;IYK3ZAC1;MV2C    ;128;18;4;5000;5000;500;32768;0;1;34;54;2010-02-15-16.20.19;
2010-02-16-07.42.00;IYK3Z4  ;MV2C    ;128;18;4;5000;5000;500;32768;0;1;16;44;2010-02-16-07.41.38;
2010-02-16-07.44.00;IYK3Z4  ;MV2C    ;128;18;4;5000;5000;500;32768;0;1;16;17;2010-02-16-07.41.38;
2010-02-16-07.44.24;IYK3Z4A1;MV2C    ;128;18;4;5000;5000;500;32768;0;1;14;44;2010-02-16-07.41.33;


CPA.STAT01.STAT060B

Start Time;APPLID;MVSID;TCB_Mode_Name;TCB_Mode_Open;TCB_Pool;TCB_Attaches;TCB_Attach_Failu . . .
2010-02-16-07.39.30;IYK3ZAC1;MV2C    ;QR;NOTOPEN ;NA      ;0;0;1;1;1;1;0;0;0;0;0;0;0;5787;
2010-02-16-07.39.30;IYK3ZAC1;MV2C    ;RO;NOTOPEN ;NA      ;0;0;1;1;1;1;0;0;0;0;0;0;0;24;15
2010-02-16-07.39.30;IYK3ZAC1;MV2C    ;CO;UNKNOWN ;NA      ;0;0;0;0;0;0;0;0;0;0;0;0;0;00.
2010-02-16-07.39.30;IYK3ZAC1;MV2C    ;SZ;UNKNOWN ;NA      ;0;0;0;0;0;0;0;0;0;0;0;0;0;00.
2010-02-16-07.39.30;IYK3ZAC1;MV2C    ;D2;UNKNOWN ;NA      ;0;0;0;0;0;0;0;0;0;0;0;0;0;00.
2010-02-16-07.39.30;IYK3ZAC1;MV2C    ;JM;NOTOPEN ;NA      ;0;0;0;0;0;0;0;0;0;0;0;0;0;00.
```

Figure 99. Statistics HDB Extract file

HDB Extract Recap report

Successful completion of the HDB Extract generates a Recap report that provides information about the records processed and written to the extract data set.

Example 1:

```
V3R2M0                                          CICS Performance Analyzer
                                              Historical Database Summary

HXTS0001 Printed at 12:03:45  3/15/2011     Data from 05:17:00 11/17/2009 to 21:31:00 01/17/2010                    Page       1


HDBX0001 Extract has completed successfully
         Data Set Name . . . . CICSPA.SUMMARY.HDB.EXTRACT
         Record count  . . . .        850
```

Figure 100. Summary HDB Extract Recap report

In this example, 850 records were written in CSV format to data set CICSPA.SUMMARY.HDB.EXTRACT. The record count does not include the field labels record.

Example 2:

```
V3R2M0                                                  CICS Performance Analyzer
                                                  Historical Database Statistics

HXTS0002 Printed at 12:03:45  3/15/2011    Data from 07:39:23 12/16/2009 to 11:45:34 02/28/2010                    Page       1


STAT067A Extract has completed successfully
        Data Set Name . . . .  CICSPA.HDB.EXTRACT.STAT067A
        Statistics ID . . . .                   067A
        Record count  . . . .                  5,905
```

Figure 101. Statistics HDB Extract Recap report

In this example, 5,905 statistics records were written in CSV format to data set CICSPA.HDB.EXTRACT.STAT067A. The records are for Statistics ID 067 which is the Files report in category Files and Databases.

CICS PA extracts CICS TG statistics to data set names with the low-level qualifier "HSTG*nnnn*". This distinguishes them from CICS TS statistics, which CICS PA extracts to data set names with the low-level qualifier "STAT*nnnn*".

HDB Housekeeping

Option 8 **Housekeeping** from the Historical Database Menu is where you request to perform HDB housekeeping. HDB Housekeeping performs tasks to re-organize and clean up your HDB environment:

1. **Submit HDB Housekeeping JCL.**

   Run HDB Housekeeping periodically to delete expired HDB data sets and to re-organize the HDB Register.

2. **Repair HDB Register using VERIFY command.**

   The IDCAMS VERIFY command is used to repair the end-of-data-set information in the VSAM Catalog for the HDB Register. Use repair if message IEC161I is being issued repeatedly. This condition is usually caused by an earlier HDB dialog or batch request that failed.

   This function is only available from the dialog.

HDB Housekeeping command

The **HDB(HKEEP)** operand requests CICS PA to perform housekeeping on the HDB Register (DDname **CPAHDBRG**). Housekeeping deletes expired HDB container data sets and removes definitions from the HDB Register that are no longer required.

The command format is:

```
CICSPA HDB(HKEEP)
```

HDB Housekeeping report

Successful completion of the Housekeeping request generates a report that provides information about the list of Container data sets that were deleted.

```
 V3R2M0                                                CICS Performance Analyzer
                                                        HDB Housekeeping Report

Housekeeping is being performed against HDB Register CICSPROD.CICSPA.HDB.REGISTER                                    Page  1


The following Containers were deleted from the Register:
  Container DSN: CICSPA.HISTORY.CICSWEEK.D03208.T193605.HDB    Reason: Expired   No of Records: 1,323
    Created: 2010-09-27-19.36.07.575656  ;  Record Range is from 2010-08-05-08.09.56.246647  to  2010-08-05-08.13.30.750026
  Container DSN: CICSPA.HISTORY.CICSWEEK.D03208.T200611.HDB    Reason: Expired   No of Records: 1,323
    Created: 2010-09-27-20.06.13.182143  ;  Record Range is from 2010-08-05-08.09.56.246647  to  2010-08-05-08.13.30.750026

Housekeeping process complete.
```

Figure 102. HDB Housekeeping report

In this example, CICS PA deleted two Container data sets for HDB CICSWEEK in Register CICSPROD.CICSPA.HDB.REGISTER.

Manifest Build

A manifest is a proprietary DB2 table named *qualifier*.CPA_MANIFEST that contains all the information required by the CICS PA plug-in for CICS Explorer to access and use the historical data. A manifest is a catalog of HDBs that are associated with the same qualifier and for which the Explorer indicator is set.

For more information about the IBM CICS Explorer, see the following Web page:

http://www.ibm.com/cics/explorer.

Manifest Build command

The manifest qualifier and Explorer option for an HDB is specified using option 5.2 **Historical Database Define** or 5.7 **Historical Database Maintenance.**

A manifest build is requested from option 5.5 **Historical Database Export** or option 5.7 **Historical Database Maintenance.** From the list of HDBs, select **Explorer -> Manifest Maintenance** from the action bar. Specify the manifest qualifier and if required, DB2 table details, then press Enter to generate the JCL.

The command format is:

```
CICSPA MANIFEST(qualifier)
```

CICS PA assigns a DDname of **MANB0001** for the Recap report output.

Manifest Build Recap report

Successful completion of the Manifest Build request produces a Recap report. It contains output from the job step that populates the manifest and lists the HDBs and their DB2 tables that were included for the specified qualifier.

```
 V3R2M0                                                  CICS Performance Analyzer
                                                        Manifest Build Recap Report
MANB0001 Printed at 9:28:48 9/07/2010

Manifest Build for Qualifier: FINANCE   HDB Register DSN: CICSPROD.CICSPA.HDB.REGISTER

Number of Performance tables:        1
Number of Statistics tables :        9

HDB Name Table Name   Description                    Status
-------- ------------ ------------------------------ ---------
PERFP1   CPA_CMFPSUM  Performance Summary            Included

PERFP2   CPA_CMFPSUM  Performance Summary            Duplicate

STATS1   CPA_HST005A  Domain Subpools                Included
         CPA_HST006A  Task Subpools                  Included
         CPA_HST014A  Storage Overview               Included
         CPA_HST014B  DSAs                           Included
         CPA_HSTG000A Connection Manager             Included
         CPA_HSTG001A CICS Server Statistics         Included

STATS2   CPA_HST065A  MVS TCBs                       Included
         CPA_HST014A  Storage Overview               Duplicate

STATS3   CPA_HSTG000A Connection Manager             Duplicate
         CPA_HSTG001A CICS Server Statistics         Duplicate
         CPA_HSTG002A CICS Server Instance for EXCI  Included
         CPA_HSTG007A CICS Server Instance for IPIC  Included
```

Figure 103. HDB Manifest Build Recap report

Confirm from the job output that the manifest DB2 table named *qualifier*.CPA_MANIFEST was successfully defined or rebuilt. In this example, FINANCE.CPA_MANIFEST.

Part 4. Statistics reporting using the dialog

This topic gives some examples of statistics reports that you can produce using the CICS PA dialog. For more information on how to use the dialog for statistics reporting, see the *CICS PA User's Guide*.

For a brief description of each field in the reports, see the CICS PA online help. For more information on understanding and interpreting the CICS statistics data in the reports, see "Using CICS statistics" in the *CICS Transaction Server for z/OS Performance Guide*. For more information on understanding and interpreting the CICS Transaction Gateway statistics data in the reports, see "Monitoring and Statistics" in *CICS Transaction Gateway: z/OS Administration*.

For information on batch Statistics Alert reporting, see "Statistics Alert reports" on page 133. For information on extracting statistics to delimited text files for further processing by other applications, see "Statistics extract" on page 225.

Chapter 12. Statistics reporting using the dialog

The CICS PA dialog provides comprehensive reporting for the following types of statistics:

- CICS statistics and server statistics in SMF 110 records with the following subtypes:
  2 CICS Statistics
  3 Shared Temporary Storage Server Statistics
  4 Coupling Facility Data Table Server Statistics
  5 Named Counter Sequence Number Server Statistics
- CICS Transaction Gateway statistics in SMF 111 records

Short-term in-depth analysis or long-term trend analysis for your CICS statistics is available via the CICS PA Historical Database (HDB) and Statistics Reporting facilities.

CICS PA statistics reporting complements the CICS utilities DFH0STAT and DFHSTUP. CICS PA presents CICS statistics in a similar way to DFH0STAT, the CICS sample statistics program. It does not accumulate and report statistics intervals like DFHSTUP.

Statistics reporting is available from the dialog. The procedure is:

1. Specify an SMF File or HDB. A list of CICS statistics intervals for all systems is displayed.
2. Select the desired interval. A menu of statistics categories and reports is displayed.
3. Select the desired report. The statistics report is displayed. There are two types of reports: label reports or tabular reports:
   - In label-based reports, fields are reported vertically. This is used when there is only one record for the report, typically an overview report.
   - In tabular reports, fields are reported horizontally. This format is displayed when there can be multiple records in the report, typically for CICS resources.
4. Sort on any column in the report, ascending or descending, using point-and-shoot column heading underlines.
5. Hyperlink to related reports using point-and-shoot field values.
6. Press Help (F1) to display descriptions of all fields in the report, together with their CICS field name and DB2 column name.
7. Press Form (F6) to edit the Report Form which controls the fields that are displayed in the report.

For more information on using the dialog for HDB and statistics reporting, see the *CICS Performance Analyzer for z/OS User's Guide*.

For more information on understanding and interpreting the CICS statistics data in the reports, see "Using CICS statistics" in the *CICS Transaction Server for z/OS Performance Guide*. For more information on understanding and interpreting the CICS Transaction Gateway statistics data in the reports, see "Monitoring and Statistics" in *CICS Transaction Gateway: z/OS Administration*.

In addition to reporting statistics using the dialog, you can also process statistics in Statistics Alert batch reports, and extract statistics to delimited text files. For details, see “Statistics Alert reports” on page 133 and “Statistics extract” on page 225.

Statistics intervals

CICS PA scans specified SMF Files for statistics intervals and presents the list of intervals for further analysis.

```
  File  Edit  Filter  Options  Help
--------------------------------------------------------------------------------
                             Statistics Intervals             Row 1 from 2028
Command ===>                                                 Scroll ===> PAGE

Select the required CICS Statistics interval.

/   System    Image  VRM  Type    --- Collection Time ---   Reset    Duration
_   IYK3ZAC1  MV2C   640  TS USS  2010/02/16 07:39:23 Thu  00:00:07
_   IYK3ZAC1  MV2C   640  TS USS  2010/02/16 07:39:26 Thu  00:00:07
_   IYK3ZAC1  MV2C   640  TS USS  2010/02/16 07:39:27 Thu  00:00:07
_   IYK3ZAC1  MV2C   640  TS USS  2010/02/16 07:39:30 Thu  00:00:07
_   IYK3ZAC1  MV2C   640  TS EOD  2010/02/16 07:39:30 Thu  00:00:07
_   IYK3Z4A1  MV2C   640  TS USS  2010/02/16 07:41:25 Thu  07:41:14
_   IYK3Z4A1  MV2C   640  TS USS  2010/02/16 07:41:27 Thu  07:41:14
_   IYK3Z4A1  MV2C   640  TS USS  2010/02/16 07:41:30 Thu  07:41:14
_   IYK3Z4    MV2C   640  TS USS  2010/02/16 07:41:31 Thu  07:41:20
_   IYK3Z4    MV2C   640  TS USS  2010/02/16 07:41:32 Thu  07:41:20
_   IYK3Z4    MV2C   640  TS USS  2010/02/16 07:41:33 Thu  07:41:20
S   IYK3Z4    MV2C   640  TS INT  2010/02/16 07:42:00 Thu  07:41:20  00:02:00
_   IYK3Z4    MV2C   640  TS USS  2010/02/16 07:42:10 Thu  07:42:00
_   IYK3Z4    MV2C   640  TS USS  2010/02/16 07:42:52 Thu  07:42:00
_   IYK3Z4A1  MV2C   640  TS USS  2010/02/16 07:42:57 Thu  07:41:14
_   IYK3Z4A1  MV2C   640  TS USS  2010/02/16 07:42:58 Thu  07:41:14
_   IYK3Z7DA  MV2C   640  TS USS  2010/02/16 07:43:01 Thu  07:42:53
_   IYK3Z7DA  MV2C   640  TS USS  2010/02/16 07:43:03 Thu  07:42:53
_   IYK3Z7DA  MV2C   640  TS USS  2010/02/16 07:43:08 Thu  07:42:53
_   IYK3Z7DD  MV2C   640  TS USS  2010/02/16 07:43:12 Thu  07:43:02
_   IYK3Z7DD  MV2C   640  TS USS  2010/02/16 07:43:13 Thu  07:43:02
_   IYK3Z7DD  MV2C   640  TS USS  2010/02/16 07:43:17 Thu  07:43:02
_   IYK3Z4A1  MV2C   640  TS USS  2010/02/16 07:43:31 Thu  07:41:14
_   IYK3Z4A1  MV2C   640  TS USS  2010/02/16 07:43:52 Thu  07:41:14
_   IYK3Z4A1  MV2C   640  TS USS  2010/02/16 07:43:53 Thu  07:41:14
_   IYK3Z4    MV2C   640  TS INT  2010/02/16 07:44:00 Thu  07:42:00  00:02:00
_   IYK3Z4A1  MV2C   640  TS EOD  2010/02/16 07:44:24 Thu  07:41:14
_   IYK3Z4A1  MV2C   640  TS USS  2010/02/16 07:44:24 Thu  07:44:24
_   IYK3Z4A1  MV2C   640  TS USS  2010/02/16 07:44:31 Thu  07:44:31
_   IYK3Z4A1  MV2C   640  TS USS  2010/02/16 07:45:07 Thu  07:44:31
_   IYK3Z4A1  MV2C   640  TS USS  2010/02/16 07:45:08 Thu  07:44:31
_   IYK3Z4A1  MV2C   640  TS USS  2010/02/16 07:45:50 Thu  07:44:31
```

Figure 104. CICS Statistics Intervals

Select a collection interval for reporting.

Statistics categories and reports

For a selected interval, CICS Statistics are displayed in a tree structure of categories and reports. The menu is release-specific. There are slight differences between the reports that are available in each CICS release.

CICS PA supports CICS Transaction Gateway statistics reporting for CICS Transaction Gateway VRM 710 and later (CICS Transaction Gateway Versions 7.1, 7.2, and 8.0).

Table 21. Statistics categories and reports

Category	Subcategory or Report	ID	Minimum CICS TS VRM (640, unless otherwise stated)
CICS Performance Analyzer - CICS TS	Alert	0SA [1]	
Regions			
	Transaction Manager	010	
	CICS Dispatcher		
	Dispatcher Overview	060	
	Dispatcher TCB Modes	060	
	Dispatcher TCB Pools	060	
	MVS TCB Overview	064	
	MVS TCBs	065	
	CICS Storage		
	Storage Overview	002/014/029 [2]	
	DSAs	002/014/029 [2]	
	Domain Subpools	005/019 [3]	
	Task Subpools	006/020 [4]	
	CICS Dumps		
	Transaction Dump Overview	087	
	Transaction Dumps	085	
	System Dump Overview	090	
	System Dumps	088	
	Enqueue Pools	097	
	BUNDLE Resources	100	660
Connectivity			
	VTAM	021	
	Terminal Autoinstall	024	
	Terminals	034	
	ISC/MRO Connections	052	
	LU62 Mode Names	076	
	ISC Security	054	
	TCP/IP Overview	107	
	TCPIPSERVICE Resources	108	
	IPCONN Resources	109	650
	FEPI Connections	017	
	FEPI Pools	016	
	FEPI Targets	018	
Files and Databases			
	Files	067	
	VSAM LSR Pools	039	
	VSAM LSR Pool Buffers	039	
	VSAM LSR Pool Files	040	
	DB2 Connections	102	
	DB2 Entries	103	
	IMS DBCTL Subsystems	028	
	WebSphere MQ Connections	074	650
Logging			
	Logstream Overview	092	

Table 21. Statistics categories and reports (continued)

Category	Subcategory or Report	ID	Minimum CICS TS VRM (640, unless otherwise stated)
	MVS Logstreams	094	
	Journal Names	093	
	Recovery Manager	099	
Queues			
	Temporary Storage Overview	048	
	Transient Data Overview	045	
	Transient Data Queues	042	
Transactions			
	Transactions	011	
	Transaction Classes	012	
	Request Models	111	
Programs			
	Programs	025	
	Program Autoinstall	023	
	Loader Activity	030	
	Loader DSAs	030	
	LIBRARY Resources	031	650
	LIBRARY Data Set Names 5	031	650
	PROGRAMDEF Resources	120	660
Event Processing			
	Event Capture	140	660
	EVENTBINDING Resources	141	660
	Event Processing	142	660
	CAPTURESPEC Resources	143	660
	EPADAPTER Resources	144	670
CICS Web Support			
	URIMAP Global	101	
	URIMAP Resources	104	
	PIPELINE Resources	105	
	WEBSERVICE Resources	106	
	DOCTEMPLATE Resources	112	650
	ATOMSERVICE Resources	110	660
	XMLTRANSFORM Resources	113	660
Java and Enterprise Java			
	JVM Pool and Class Cache	117	
	JVM Profiles	118	
	JVM Profile Modes	118	
	JVM Programs	119	
	JVMSERVER Resources	116	
	CorbaServers	114	
	Enterprise Java Beans	115	
Miscellaneous			
	Monitoring	081	
	Statistics	066	
	Table Manager	063	
	User Domain	061	

Table 21. Statistics categories and reports (continued)

Category	Subcategory or Report	ID	Minimum CICS TS VRM (640, unless otherwise stated)
CICS Server			
	Temporary Storage		
	List Structures	121	
	Queue Buffer Pools	122	
	Server Storage	123	
	Named Counters		
	List Structures	124	
	Server Storage	125	
	Coupling Facility Data Tables		
	List Structures	126	
	Table Access	127	
	Requests	128	
	Server Storage	129	
CICS Performance Analyzer - CICS TG	Alert	0SA 1	
CICS Transaction Gateway 6	Connection Manager	000	(Minimum CICS TG VRM 710)
	CICS Server Statistics	001	
	CICS Server Instance for EXCI	002	
	CICS Server Instance for IPIC	007	
	Gateway Daemon	003	
	Protocol Handler	004	
	Worker Thread	005	
	System Environment	006	

1 The Alert report is only available for Statistics HDB reporting, not when processing SMF files. It displays the statistics collected in the HDB that complied with Alert conditions in the HDB definition. For similar batch reporting from the original SMF files, use the Statistics Alert report available in the Report Sets facility.

2 Statistics record ID 002 applies only to CICS version 640 and earlier.

Statistics record ID 014 applies only to CICS version 650 and 660.

3 Statistics record ID 005 applies only to CICS version 660 and earlier.

4 Statistics record ID 006 applies only to CICS version 660 and earlier.

5 The Library Data Set Names statistics report appears in the tree structure only when you are selecting the reports you want to collect in an HDB or export to DB2. This report does not appear in the tree structure for viewing or printing reports. To view this report:

1. View the LIBRARY Resources report.
2. Move the cursor to a library name, and then press Enter (the library name is a point-and-shoot field). The report displays the data set names in the concatenation for that library.

6 CICS Transaction Gateway statistics were introduced in CICS Transaction Gateway V7.1. Selecting an interval from the Statistics Intervals list panel

displays the Statistics Reports list panel, showing the appropriate reports for the system type, CICS Transaction Server (TS), or CICS Transaction Gateway (TG).

When defining or maintaining a statistics HDB, the Statistics Reports list panel shows both CICS TS and CICS TG reports, enabling you to specify whether the HDB collects CICS TS statistics, CICS TG statistics, or both. Similarly, when exporting or extracting from a statistics HDB, this panel shows reports for both system types, so that you can export or extract data for both system types in a single pass.

Label reports for global statistics

In label-based reports, fields are reported vertically. This is used when there is only one record for the report, typically an overview report.

```
REPORT    Storage Overview                                        Line 00000001
Command ===>                                                   Scroll ===> PAGE

System: IYK3Z4/MV2C        Type: INT  Interval: 2010/02/16 07:42:00 Thursday

Page Pools  . . . . . . . . . . :                  8
Storage Protection  . . . . . . :                 NO
Reentrant Programs Protected  . :                YES
Transaction Isolation . . . . . :                 NO
Current Unique Subspace Users . :                  0
Total Unique Subspace Users . . :                  0
Peak Unique Subspace Users  . . :                  0
Current Common Subspace Users . :                  0
Total Common Subspace Users . . :                  0
Peak Common Subspace Users  . . :                  0
Current DSA Limit . . . . . . . :              5120K
Current EDSA Limit  . . . . . . :             40960K
Current DSA Total . . . . . . . :              1280K
Current EDSA Total  . . . . . . :             23552K
Peak DSA Total  . . . . . . . . :              1280K
Peak EDSA Total . . . . . . . . :             23552K
MVS Storage Wait Time . . . . . :     00.00.00.000000
MVS Storage Request Waits . . . :                  0
```

Figure 105. Statistics report (label format): Storage Overview

Tabular reports for resource statistics

In tabular reports, fields are reported horizontally. This format is displayed when there can be multiple records in the report, typically for CICS resources.

```
REPORT    Domain Subpools                        Line 00000001 Col 002 008   >
Command ===>                                                  Scroll ===> PAGE

System: IYK3Z4/MV2C        Type: INT  Interval: 2010/02/16 07:42:00 Thursday


Subpool   DSA       Element        Fixed  Element      Element
Name      Name      Type          Length  Chaining    Boundary  Location  Acces

>LGJMC    ECDSA     FIXED             60  NO                 4  ABOVE     CICS
AITM_TAB  ECDSA     FIXED            584  NO                 8  ABOVE     CICS
AP_TCA24  CDSA      FIXED           1536  NO               128  BELOW     CICS
AP_TCA31  ECDSA     FIXED           1536  NO               128  ABOVE     CICS
AP_TXDEX  ECDSA     FIXED             72  NO                 8  ABOVE     CICS
APAID31   ECDSA     FIXED            152  NO                 8  ABOVE     CICS
APBMS     ECDSA     VARIABLE           0  YES               16  ABOVE     CICS
APCOMM31  ECDSA     VARIABLE           0  NO                16  ABOVE     CICS
APDWE     ECDSA     FIXED             32  NO                 8  ABOVE     CICS
APECA     SDSA      FIXED              8  NO                 8  BELOW     CICS
APICE31   ECDSA     FIXED            208  NO                 8  ABOVE     CICS
APURD     ECDSA     VARIABLE           0  NO                16  ABOVE     CICS
ASYNCBUF  ECDSA     FIXED           4096  NO                 4  ABOVE     CICS
BAGENRAL  ECDSA     VARIABLE           0  NO                16  ABOVE     CICS
BAOFBUSG  ECDSA     FIXED             24  NO                 8  ABOVE     CICS
BAOFT_ST  ECDSA     FIXED            136  NO                 8  ABOVE     CICS
BR_BFBE   ECDSA     FIXED             80  NO                16  ABOVE     CICS
BR_BFNB   ECDSA     FIXED             96  NO                16  ABOVE     CICS
```

Figure 106. Statistics report (tabular format): Domain Subpools

Statistics Report Form

The Statistics Report Form is used to tailor the Statistics report. Each line in the Form represents a row heading in the label report or a column heading in the tabular report.

```
FORM      Transaction Manager                                  Line 1 of 12
Command ===> ____________________________________________ Scroll ===> PAGE

/  Heading                                          Usage
_  Transactions                                     _____
_  Current MAXTASK                                  _____
_  Current Active User Transactions                 _____
_  Current Queued User Transactions                 _____
_  Times at MAXTASK                                 _____
_  Peak Active User Transactions                    _____
_  Peak Queued User Transactions                    _____
_  Total Active User Transactions                   _____
_  Total Delayed User Transactions                  _____
_  Total Queuing Time for MAXTASK                   OMIT_
_  Current Queuing Time for MAXTASK                 OMIT_
_  Total Transactions to Last Reset                 _____
******************************** End of Form ********************************
```

Figure 107. Statistics Report Form (label format): Transaction Manager

```
FORM      TCP/IP Services                                        Line 1 of 23
Command ===> ____________________________________________ Scroll ===> PAGE

                                                        ------ Width ------
/  Heading                                        Usage Column   Max Report
_  TCP/IP Service                                 FIX__            8      8
_  Transactions Attached                          _____           12     22
_  Current Connections                            _____           11     35
_  Peak Connections                               _____           11     48
_  Time Opened GMT                                _____           19     69
_  Time Opened Local                              _____           19     90
_  Time Closed GMT                                _____           19    111
_  Time Closed Local                              _____           19    132
_  Port Number                                    _____           10    144
_  SSL Support Level                              _____            8    154
_  Port Backlog                                   _____           10    166
_  Send Requests                                  _____           10    178
_  Bytes Sent                                     _____           10    190
_  Receive Requests                               _____           10    202
_  Bytes Received                                 _____           10    214
_  IP Address                                     _____  ___15    15    231
_  WLM DNS Group                                  _____  ___18    18    251
_  Protocol                                       _____            8    261
_  Authenticate                                   _____  ___12    12    275
_  Privacy                                        _____            8    285
_  Attachsec                                      _____            9    296
_  TSQ Prefix                                     _____            8    306
_  MAXDATA Length                                 _____           10    318
******************************** End of Form ********************************
```

Figure 108. Statistics Report Form (tabular format): TCP/IP Services

The order of the fields in the Form dictates the order of the fields in the report. You can **OMIT** fields that you do not want reported. You can also **FIX** fields at the start of the report so that they remain in view when horizontally scrolling the report. For long character fields in tabular reports, you can truncate the field in the report by specifying a **column width.**

Statistics field help

Field descriptions are available for all statistics reports.

```
                    Field Descriptions for Statistics Report

Category  : Files and Databases                  Macro . . : DFHA17DS
Report  . : Files                                DSECT . . : DFHA17DS
____________________________________________________________________________
                                                                   More:     +
File Name

CICS field name: A17FNAM                DB2 column name: FILE_NAME

The name you specified in the DEFINE FILE command of resource definition
online.

Reset characteristic: Not reset
____________________________________________________________________________

File Location

CICS field name: A17FLOC                DB2 column name: FILE_LOCATION

The file is defined as being local to this CICS system, or resides on a remote
CICS system. The field is one byte long, and is set to "R" if remote.

Reset characteristic: Not reset
____________________________________________________________________________

Data Table Fields

CICS field name: A17DT                  DB2 column name: DATA_TABLE_FIELDS

A one-byte field that contains the value R, S, T, L, K, or X, if data table
statistics fields are present in the record. The values indicate:
R    This is a remote file for which table read and source read statistics are
     present.
S    The resource was not opened as a table but was able to access data from a
     table associated with the same data set.
T    The resource is a shared data table.
L    The resource is a coupling facility data table (locking model).
K    The resource is a coupling facility data table (contention model).
X    The resource has been opened with a source data set which has an
     associated CICS maintained data table and the resource has been updated
     which has caused the data table to also be updated.

Reset characteristic: Not reset
```

Figure 109. Statistics field help: Files (Statistics ID 067)

The field help provides a description of each statistic, together with the CICS field name and the CICS PA DB2 column name.

Part 5. CICS-related SMF data

These topics describe the Shared System Takeup Recap report and provide a detailed description of the CMF data to help you understand and interpret CICS PA reports and extracts.

Chapter 13. Shared System Definitions

The systems and data files that you want to report against must first be defined to CICS PA. The dialog provides two ways to do this:

Personal System Definitions
: System definitions that are typically maintained by you and used by you for reporting. The definitions are saved in your Personal Profile Library in CICS PA Settings.

Shared System Definitions
: System definitions that are typically maintained by a central administrator and used by all permitted users for reporting. The definitions are saved in the HDB Register.

Shared System Definitions can be maintained in a number of ways:

1. Individually specify systems and their related files
2. Individually specify groups and their related systems
3. Take-up systems, files, and groups from personal System Definitions
4. Take-up systems and files from SMF Files

```
   File  Options  Help
 ------------------------------------------------------------------------------
                        Shared System Definitions Menu
Command ===> ____________________________________________________________

Select an option then press Enter

1  1. Define Systems and their SMF Files
   2. Maintain Group definitions
   3. Take-up from personal System Definitions
   4. Take-up from SMF File

Enter "/" to select option
_  Always go directly to Systems View

HDB Register . . . 'CICSPA.HDB.REGISTER'_________________________  +

 F1=Help     F3=Exit     F4=Prompt   F6=Resize  F10=Actions F12=Cancel
```

Figure 110. Shared System Definitions Menu

Only the Take-up from SMF Files has a batch component described in this book. The other maintenance processes are dialog processes described in the *CICS Performance Analyzer for z/OS User's Guide*.

Take-up from SMF Files

Option 4 **Take-up from SMF File** from the Shared System Definitions Menu provides the facility to take-up system and file information from one SMF File.

Data Take-up from SMF File is a two-step process. First the system details are extracted from the file, then used to automatically update your Shared System Definitions. Successful completion of the first step generates a Recap report that provides information about all the systems contained on the SMF Files.

The batch command is:

```
HDB(TAKEUP,                    analyze SMF file contents
   [SYSTEMS,]                    load systems
   [FILEIMAGE|FILESYSTEM,]       load files, connect to either image or system
   [OUTPUT(ddname)])             DDname for Recap report output
```

The following batch JCL illustrates how you can process multiple SMF Files. It runs the first step only to analyze the contents of the SMF files.

```
//CICSPA JOB ,CLASS=A,REGION=6M,MSGCLASS=T,MSGLEVEL=(1,1)
//*
//CICSPA EXEC PGM=CPAMAIN
//STEPLIB  DD DSN=CICSPA.V3R2M0.SCPALINK,DISP=SHR
//CPAHDBRG DD DSN=CICSPA.HDB.REGISTER,DISP=SHR
//SYSPRINT DD SYSOUT=*
//* SMF FILES
//SMFIN001 DD DISP=SHR,DSN=CICPRO.SMF(-2)
//         DD DISP=SHR,DSN=CICPRO.SMF(-1)
//         DD DISP=SHR,DSN=CICPRO.SMF(0)
//SYSIN DD *
    CICSPA IN(SMFIN001),
       HDB(TAKEUP)
/*
```

The following example shows part of the Recap report that is generated at the end of file processing. It shows the contents of the SMF files.

With this information you can elect to take-up Systems or Files or both, and specify whether to connect the Files to the System or the Image.

Note that the Recap report is showing what is available for take-up from the SMF files, it is ***not*** showing the results of take-up. Review the Shared System Definitions in the dialog to see the results of take-up.

If system definition take-up finds CICS TS and TG systems with the same APPLID, it creates a single CICS system definition. System definitions taken up from SMF 111 records have a blank VRM field value (this field is for CICS TS versions, not CICS TG versions). To help distinguish CICS TS systems from CICS TG systems, definitions taken up from SMF 111 records have the description “CICS TG system added by Take-up”.

```
 V3R2M0                                                  CICS Performance Analyzer
                                                Shared System Take-up Recap Report By Data Set

HDB00001 Printed at 12:03:45  3/15/2011    Data from 16:30:00 03/13/2010 to 12:00:11 03/14/2010                        Page    1
                                                   -------Start-------  --------Stop-------  -------System-------    Record
 DDname  Data Set Name                                Date      Time       Date      Time    Name     Type   Imag    Count
SMFIN001 CICPRO.SMF.G1443V00                       2010-03-13 20.30.00  2010-03-14 12.00.00  SCLOG    Logger FTS2       64
                                                                                             FTS2     Image              64
         CICPRO.SMF.G1442V00                       2010-03-14 11.10.38  2010-03-14 12.00.11  CCVT22T  CICS   FTS1     3030
                                                                                             FTS1     Image           29390
                                                                                             CCVT31M  CICS   FTS1       68
                                                                                             CCVT22C  CICS   FTS1    12122
                                                                                             CCVT31T  CICS   FTS1      122
                                                                                             CCVT31C  CICS   FTS1      323
                                                                                             CCVT23C  CICS   FTS1     6426
                                                                                             CCVT41C  CICS   FTS1      432
                                                                                             CCVT23T  CICS   FTS1     3747
                                                                                             CCVT31CX CICS   FTS1       51
                                                                                             CCVT23CX CICS   FTS1       72
                                                                                             CCVT41CX CICS   FTS1       72
                                                                                             CCVT22CX CICS   FTS1      228
                                                                                             CCVT22M  CICS   FTS1      201
                                                                                             CCVT41M  CICS   FTS1       72
                                                                                             SCLOG    Logger FTS1      102
         CICPRO.SMF.G1441V00                       2010-03-14 10.02.16  2010-03-14 11.10.13  CCVT22T  CICS   FTS1     8470
                                                                                             FTS1     Image           34229
                                                                                             CCVT31M  CICS   FTS1      272
                                                                                             CCVT22C  CICS   FTS1     4655
                                                                                             CCVT31T  CICS   FTS1      375
                                                                                             CCVT31C  CICS   FTS1      374
                                                                                             CCVT23C  CICS   FTS1    12852
                                                                                             CCVT41C  CICS   FTS1      360
                                                                                             CCVT23T  CICS   FTS1     3600
```

```
 V3R2M0                                                  CICS Performance Analyzer
                                                Shared System Take-up Recap Report By System

HDB00001 Printed at 12:03:45  3/15/2011    Data from 16:30:00 03/13/2010 to 12:00:11 03/14/2010                        Page    3
-------System-------                                                  -------Start-------  --------Stop-------    Record
Name     Type   Imag  DDname  Data Set Name                              Date      Time       Date      Time       Count
SCLOG    Logger FTS2 SMFIN001 CICPRO.SMF.G1443V00                      2010-03-13 20.30.00  2010-03-14 12.00.00        64
                             CICPRO.SMF.G1437V00                      2010-03-13 16.30.00  2010-03-13 20.00.00        16
FTS2     Image       SMFIN001 CICPRO.SMF.G1443V00                      2010-03-13 20.30.00  2010-03-14 12.00.00        64
                             CICPRO.SMF.G1437V00                      2010-03-13 16.30.00  2010-03-13 20.00.00        16
CCVT22T  CICS   FTS1         CICPRO.SMF.G1442V00                      2010-03-14 11.10.38  2010-03-14 11.53.40      3030
                             CICPRO.SMF.G1441V00                      2010-03-14 10.02.51  2010-03-14 11.09.00      8470
                             CICPRO.SMF.G1440V00                      2010-03-14 08.21.37  2010-03-14 09.57.37     12685
                             CICPRO.SMF.G1439V00                      2010-03-14 06.25.38  2010-03-14 08.16.59      8544
                             CICPRO.SMF.G1438V00                      2010-03-13 20.09.11  2010-03-14 00.00.00       266
FTS1     Image               CICPRO.SMF.G1442V00                      2010-03-14 11.10.38  2010-03-14 12.00.11     29390
                             CICPRO.SMF.G1441V00                      2010-03-14 10.02.16  2010-03-14 11.10.13     34229
                             CICPRO.SMF.G1440V00                      2010-03-14 08.19.31  2010-03-14 10.02.14     50835
                             CICPRO.SMF.G1439V00                      2010-03-14 06.25.38  2010-03-14 08.18.08     39768
                             CICPRO.SMF.G1438V00                      2010-03-13 20.00.51  2010-03-14 00.00.00      8720
```

Figure 111. Shared System Take-up Recap report

Chapter 14. Understanding CMF data

When the CICS Monitoring Facility (CMF) is running, it collects the following types, or classes, of data:
- Performance class data
- Exception class data
- Transaction resource class data

Subsequently the data can be made available offline for analysis by CICS PA.

To understand the function of CICS PA and to interpret the reports and extracts properly, some knowledge of the CMF data records and their relationship to one another is necessary.

Special point

Care should be taken when using the information in this section to analyze monitoring data that is appropriate to your release of CICS.

You can use Table 31 on page 345 to determine in which CICS release particular monitoring fields are available.

CMF performance class data fields

Performance class data is detailed transaction-level information, such as the processor and elapsed time for a transaction, or the time spent waiting for I/O. At least one performance record is written for each transaction that is being monitored. Performance class data provides detailed, resource-level data that can be used for accounting, performance analysis, and capacity planning. This data contains information relating to individual task resource usage, and is completed for each task when the task terminates.

The Monitoring Control Table (MCT) controls the CMF performance data that is collected. The performance class data records are not fixed format, instead the format is described in associated CMF dictionary records.

All the CMF performance class data fields are described in this section. Each data field is listed by **Field ID** within **Owner** as defined in the monitoring dictionary record.

For a complete description of the fields and to understand how the fields are collected, see the *CICS Performance Guide.*

DFHAPPL fields

DFHAPPL owns the following performance class data fields. They are only available when application programs invoke the application naming event monitoring points. For more information, see the APPLNAME parameter on the DFHMCT TYPE=INITIAL macro in the *CICS Customization Guide..*

`001 (Type-C, APPLNAME, 12 bytes)`
The data written when the DFHAPPL.1 and DFHAPPL.2 application naming event monitoring points are invoked. The 12 byte APPLNAME field comprises:

- DFHAPPL.1 in bytes 1 to 4. For example, a 4–byte transaction ID with CICS PA field name APPLTRAN.
- DFHAPPL.2 in bytes 5 to 12. For example, an 8–byte program name with CICS PA field name APPLPROG.

DFHCBTS fields

DFHCBTS owns the following performance class data fields:

200 (Type-C, PRCSNAME, 36 bytes)
The name of the CICS business transaction service (BTS) process of which the user task formed part.

201 (Type-C, PRCSTYPE, 8 bytes)
The process-type of the CICS BTS process of which the user task formed part.

202 (Type-C, PRCSID, 52 bytes)
The CICS-assigned identifier of the CICS BTS root activity that the user task implemented.

203 (Type-C, ACTVTYID, 52 bytes)
The CICS-assigned identifier of the CICS BTS activity that the user task implemented.

204 (Type-C, ACTVTYNM, 16 bytes)
The name of the CICS BTS activity that the user task implemented.

205 (Type-A, BARSYNCT, 4 bytes)
The number of CICS BTS run process or run activity requests issued by the user task to run a child process or activity synchronously.

206 (Type-A, BARASYCT, 4 bytes)
The number of CICS BTS run process and run activity requests issued by the user task to run a child process or activity asynchronously.

207 (Type-A, BALKPACT, 4 bytes)
The number of CICS BTS link process or link activity requests issued by the user task.

208 (Type-A, BADPROCT, 4 bytes)
The number of CICS BTS define process requests issued by the user task.

209 (Type-A, BADACTCT, 4 bytes)
The number of CICS BTS define activity requests issued by the user task.

210 (Type-A, BARSPACT, 4 bytes)
The number of CICS BTS reset process and reset activity requests issued by the user task.

211 (Type-A, BASUPACT, 4 bytes)
The number of CICS BTS suspend process and suspend activity requests issued by the user task.

212 (Type-A, BARMPACT, 4 bytes)
The number of CICS BTS resume process and resume activity requests issued by the user task.

213 (Type-A, BADCPACT, 4 bytes)
The number of CICS BTS delete activity, cancel process and cancel activity requests issued by the user task.

214 (Type-A, BAACQPCT, 4 bytes)
The number of CICS BTS acquire process and acquire activity requests issued by the user task.

215 (Type-A, BATOTPCT, 4 bytes)
The total number of CICS BTS process and activity requests issued by the user task.

216 (Type-A, BAPRDCCT, 4 bytes)
The number of CICS BTS delete, get, or put container requests for process data containers issued by the user task.

217 (Type-A, BAACDCCT, 4 bytes)
The number of CICS BTS delete, get, or put container requests for activity data containers issued by the user task.

218 (Type-A, BATOTCCT, 4 bytes)
The total number of CICS BTS process container and activity container requests issued by the user task.

219 (Type-A, BARATECT, 4 bytes)
The number of CICS BTS retrieve-reattach requests issued by the user task.

220 (Type-A, BADFIECT, 4 bytes)
The number of CICS BTS define-input event requests issued by the user task.

221 (Type-A, BATIAECT, 4 bytes)
The number of CICS BTS timer associated requests issued by the user task.

222 (Type-A, BATOTECT, 4 bytes)
The total number of CICS BTS event-related requests issued by the user task.

Table 22. EXEC CICS business transaction services (BTS) commands related to the BTS monitoring fields

EXEC CICS BTS command	Monitoring fields
ACQUIRE ACTIVITYID	BAACQPCT and BATOTPCT
ACQUIRE PROCESS	BAACQPCT and BATOTPCT
ADD SUBEVENT	BATOTECT
CANCEL ACTIVITY	BADCPACT and BATOTPCT
CANCEL ACQPROCESS	BADCPACT and BATOTPCT
CANCEL ACQPROCESS	BADCPACT and BATOTPCT
CHECK ACQPROCESS	BATOTPCT
CHECK ACTIVITY	BATOTPCT
CHECK TIMER	BATIAECT and BATOTECT
DEFINE ACTIVITY	BADACTCT and BATOTPCT
DEFINE COMPOSITE EVENT	BATOTECT
DEFINE INPUT EVENT	BADFIECT and BATOTECT
DEFINE PROCESS	BADPROCT and BATOTPCT
DEFINE TIMER	BATIAECT and BATOTECT
DELETE ACTIVITY	BADCPACT and BATOTPCT
DELETE CONTAINER ACTIVITY	BAACDCCT and BATOTCCT
DELETE CONTAINER ACQACTIVITY	BAACDCCT and BATOTCCT
DELETE CONTAINER PROCESS	BAPRDCCT and BATOTCCT
DELETE CONTAINER ACQPROCESS	BAPRDCCT and BATOTCCT
DELETE EVENT	BATOTECT
DELETE TIMER	BATIAECT and BATOTECT

Table 22. EXEC CICS business transaction services (BTS) commands related to the BTS monitoring fields (continued)

EXEC CICS BTS command	Monitoring fields
FORCE TIMER	BATIAECT and BATOTECT
GET CONTAINER ACTIVITY	BAACDCCT and BATOTCCT
GET CONTAINER ACQACTIVITY	BAACDCCT and BATOTCCT
GET CONTAINER PROCESS	BAPRDCCT and BATOTCCT
GET CONTAINER ACQPROCESS	BAPRDCCT and BATOTCCT
LINK ACQPROCESS	BALKPACT and BATOTPCT
LINK ACTIVITY	BALKPACT and BATOTPCT
LINK ACQACTIVITY	BALKPACT and BATOTPCT
PUT CONTAINER ACTIVITY	BAACDCCT and BATOTCCT
PUT CONTAINER ACQACTIVITY	BAACDCCT and BATOTCCT
PUT CONTAINER PROCESS	BAPRDCCT and BATOTCCT
PUT CONTAINER ACQPROCESS	BAPRDCCT and BATOTCCT
REMOVE SUBEVENT	BATOTECT
RESET ACQPROCESS	BARSPACT and BATOTPCT
RESET ACTIVITY	BARSPACT and BATOTPCT
RESUME ACQACTIVITY	BARMPACT and BATOTPCT
RESUME ACQPROCESS	BARMPACT and BATOTPCT
RESUME ACTIVITY	BARMPACT and BATOTPCT
RETRIEVE REATTACH EVENT	BARATECT and BATOTECT
RETRIEVE SUBEVENT	BATOTECT
RUN ACTIVITY SYNCHRONOUS	BARSYNCT and BATOTPCT
RUN ACQACTIVITY SYNCHRONOUS	BARSYNCT and BATOTPCT
RUN ACQPROCESS SYNCHRONOUS	BARSYNCT and BATOTPCT
RUN ACTIVITY ASYNCHRONOUS	BARASYCT and BATOTPCT
RUN ACQACTIVITY ASYNCHRONOUS	BARASYCT and BATOTPCT
RUN ACQPROCESS ASYNCHRONOUS	BARASYCT and BATOTPCT
SUSPEND ACQACTIVITY	BASUPACT and BATOTPCT
SUSPEND ACQPROCESS	BASUPACT and BATOTPCT
SUSPEND ACTIVITY	BASUPACT and BATOTPCT
TEST EVENT	BATOTECT

For more information on CICS BTS, see *CICS Business Transaction Services.*

DFHCHNL fields

DFHCHNL owns the following performance class data fields:

321 (Type-A, PGTOTCCT, 4 bytes)
The total number of requests for channel containers issued by the user task.

322 (Type-A, PGBRWCCT, 4 bytes)
The number of browse requests for channel containers issued by the user task.

323 (Type-A, PGGETCCT, 4 bytes)
The number of GET CONTAINER requests for channel containers issued by the user task.

324 (Type-A, PGPUTCCT, 4 bytes)
The number of PUT CONTAINER requests for channel containers issued by the user task.

325 (Type-A, PGMOVCCT, 4 bytes)
The number of MOVE CONTAINER requests for channel containers issued by the user task.

326 (Type-A, PGGETCDL, 4 bytes)
The total length, in bytes, of the data in the containers of all the GET CONTAINER CHANNEL commands issued by the user task.

327 (Type-A, PGPUTCDL, 4 bytes)
The total length, in bytes, of the data in the containers of all the PUT CONTAINER CHANNEL commands issued by the user task.

328 (Type-A, PGCRECCT, 4 bytes)
The number of containers created by MOVE and PUT CONTAINER requests for channel containers issued by the user task.

329 (Type-A, PGCSTHWM, 4 bytes)
Maximum amount (high-water mark), in bytes, of container storage allocated to the user task.

DFHCICS fields

DFHCICS owns the following performance class data fields:

005 (Type-T, START, 8 bytes)
The start time (in GMT) of the measurement period. This is either:

- The time at which the task was attached, or
- The time at which data recording was most recently restarted in support of a user event monitoring point (EMP) DELIVER option or the monitoring options MNCONVerse, MNSYNCpoint, or MNFREQuency.

Note:

1. CICS PA will always convert the start time into local time before formatting and printing.
2. The transaction response time (or measurement period) can be calculated by subtracting the START time from the STOP time.

006 (Type-T, STOP, 8 bytes)
The finish time (in GMT) of the measurement period. This is either:

- the time at which the task was detached, or
- the time at which data recording was most recently completed for the transaction in support of a user event monitoring point (EMP) DELIVER option or the monitoring options MNCONVerse, MNSYNCpoint, or MNFREQuency.

Note:

1. CICS PA will always convert the stop time into local time before formatting and printing.
2. The transaction response time (or measurement period) can be calculated by subtracting the START time from the STOP time.

025 (Type-A, CFCAPICT, 4 bytes)
The total number of CICS OO foundation class requests and Java API for CICS (JCICS) class requests issued by the user task. CICS does not distinguish between the OO foundation class and JCICS class requests.

089 (Type-C, USERID, 8 bytes)
User identification at task attach. This can also be a remote user identifier for a task created as the result of receiving an ATTACH request across an MRO or APPC link with attach-time security enabled.

103 (Type-S, EXWTTIME, 8 bytes)
Accumulated data for exception conditions. The timer component of the clock contains the total elapsed time for which the user waited on exception conditions. The period count equals the number of exception conditions that have occurred for this task.. For more information, see "CMF exception class data fields" on page 328.

Note: This field is updated when any of the exception conditions are encountered by the user task even when the exception class is inactive.

112 (Type-C, RTYPE, 4 bytes)
The performance record type (low-order byte-3). This field indicates the reason why a performance record has been output for the user task. It can be one of the following values:

C Record output for a terminal converse
D Record output for a user EMP DELIVER request
F Record output for a long-running transaction
S Record output for a syncpoint
T Record output for a task termination.

130 (Type-C, RSYSID, 4 bytes)
The Transaction Routing Sysid RSYSID field IDentifies the connection name (sysid) of the remote system to which the transaction was routed. If the transaction was not routed this field is null and the initial program name (field: PGMNAME, owner: DFHPROG, field ID: 071) will identify the initial application program name invoked for the transaction. See Table 25 on page 279 for more details.

This field also identifies the connection name (sysid) of the remote system to which the transaction was routed when using the CRTE routing transaction. However, this field is null for those CRTE transactions which establish or cancel the transaction routing session.

131 (Type-C, PERRECNT, 4 bytes)
The total number of performance class records written by the CICS Monitoring Facility (CMF) for this user task.

167 (Type-C, SRVCLASS, 8 bytes)
The MVS Workload Manager (WLM) service class for this transaction. This field is null if there are no transaction classification rules defined for CICS subsystems in the active MVS Workload Manager (WLM) service policy or the transaction was WLM-classified in another CICS region.

The transaction flags field, TRANFLAG (owner: DFHTASK, field ID: 164) can be used to determine if this transaction was WLM-classified in another region.

See "Workload Activity report" on page 88.

168 (Type-C, RPTCLASS, 8 bytes)
The MVS Workload Manager (WLM) report class for this transaction. This field is null if there are no transaction classification rules defined for CICS

subsystems in the active MVS Workload Manager (WLM) service policy or the transaction was WLM-classified in another CICS region.

The transaction flags field, TRANFLAG (owner: DFHTASK, field ID: 164) can be used to determine if this transaction was WLM-classified in another region.

See "Workload Activity report" on page 88.

351 (Type-C, OADID, 64 bytes
The adapter identifier added to the associated data origin descriptor by the adapter. This field is blank if the task was not started through an adapter, or if it was started through an adapter but the adapter did not set this value.

352 (Type-C, OADATA1, 64 bytes
The data added to the associated data origin descriptor by the adapter. This field is blank if the task was not started through an adapter, or if it was started through an adapter but the adapter did not set this value.

353 (Type-C, OADATA2, 64 bytes
The data added to the associated data origin descriptor by the adapter. This field is blank if the task was not started through an adapter, or if it was started through an adapter but the adapter did not set this value.

354 (Type-C, OADATA3, 64 bytes
The data added to the associated data origin descriptor by the adapter. This field is blank if the task was not started through an adapter, or if it was started through an adapter but the adapter did not set this value.

359 (Type-C, ONETWKID, 8 bytes
The network identifier from which this work request (transaction) originated.

360 (Type-C, OAPPLID, 8 bytes)
The APPLID of the CICS region in which this work request (transaction) originated; (for example, the region in which the CWXN task ran).

361 (Type-T, OSTART, 8 bytes)
The time at which the originating task (for example, the CWXN task) was started.

362 (Type-P, OTRANNUM, 4 bytes)
The number of the originating task (for example, the CWXN task).

363 (Type-C, OTRAN, 4 bytes)
The transaction ID (TRANSID) of the originating task (for example, the CWXN task).

364 (Type-C, OUSERID, 8 bytes)
The originating Userid-2 or Userid-1 (for example, from CWBA), depending on the originating task.

365 (Type-C, OUSERCOR, 64 bytes)
The originating user correlator.

366 (Type-C, OTCPSVCE, 8 bytes)
The name of the originating TCPIPSERVICE.

367 (Type-A, OPORTNUM, 4 bytes)
The port number used by the originating TCPIPSERVICE.

368 (Type-C, OCLIPADR, 16 bytes)
The IP address of the originating client (or Telnet client).

369 (Type-A, OCLIPORT, 4 bytes)
The TCP/IP port number of the originating client (or Telnet client).

370 (Type-A, OTRANFLG, 8 bytes)
Originating transaction flags, a string of 64 bits used for signaling transaction definition and status information:

Byte 0 The facility-type of the originating transaction:
- **Bit 0** None (X'80')
- **Bit 1** Terminal (X'40')
- **Bit 2** Surrogate (X'20')
- **Bit 3** Destination (X'10')
- **Bit 4** 3270 bridge (X'08')
- **Bit 5** Reserved
- **Bit 6** Reserved
- **Bit 7** Reserved

Byte 1 Transaction identification information:
- **Bit 0** System transaction (X'80')
- **Bit 1** Mirror transaction (X'40')
- **Bit 2** DPL mirror transaction (X'20')
- **Bit 3** ONC/RPC Alias transaction (X'10')
- **Bit 4** WEB Alias transaction (X'08')
- **Bit 5** 3270 Bridge transaction (X'04')
- **Bit 6** Reserved (X'02')
- **Bit 7** CICS BTS Run transaction (X'01')

Byte 2 Reserved.

Byte 3 Transaction definition information:
- **Bit 0** Taskdataloc = below (x'80')
- **Bit 1** Taskdatakey = cics (x'40')
- **Bit 2** Isolate = no (x'20')
- **Bit 3** Dynamic = yes (x'10')
- **Bit 4-7** Reserved

Byte 4 The type of the originating transaction:
- **X'01'** None
- **X'02'** Terminal
- **X'03'** Transient data
- **X'04'** START
- **X'05'** Terminal-related START
- **X'06'** CICS business transaction services (BTS) scheduler
- **X'07'** Transaction manager domain (XM)-run transaction
- **X'08'** 3270 bridge
- **X'09'** Socket domain
- **X'0A'** CICS Web support (CWS)
- **X'0B'** Internet Inter-ORB Protocol (IIOP)
- **X'0C'** Resource Recovery Services (RRS)
- **X'0D'** LU 6.1 session
- **X'0E'** LU 6.2 (APPC) session
- **X'0F'** MRO session
- **X'10'** External Call Interface (ECI) session
- **X'11'** IIOP domain request receiver
- **X'12'** Request stream (RZ) instore transport
- **X'13'** IP interconnectivity session
- **X'14'** Event

Byte 5 Transaction status information:
- **Bit 0** This transaction is the originating transaction
- **Bit 1** Reserved
- **Bit 2** Resource Class records for this task

Bit 3 Identity Class records for this task
Bit 4 Reserved
Bit 5 Reserved
Bit 6 Task purged on an open TCB

Note: If bit 6 is set, the task has been purged while running on an open TCB, and its transaction timing clocks have been left in an unreliable state. Because of this, the clocks will be set to zero when the record is written by the CICS Monitoring Facility (CMF).

Bit 7 Task abnormally terminated

Byte 6 Reserved.

Byte 7 Recovery manager information:
Bit 0 Indoubt wait = no
Bit 1 Indoubt action = commit
Bit 2 Recovery manager - UOW resolved with indoubt action
Bit 3 Recovery manager - Shunt
Bit 4 Recovery manager - Unshunt
Bit 5 Recovery manager - Indoubt failure
Bit 6 Recovery manager - Resource owner failure
Bit 7 Reserved

371 (Type-C, OFCTYNME, 4 bytes)
The facility name of the originating transaction. If the originating transaction is not associated with a facility, this field is null. The transaction facility type, if any, can be identified using byte 0 of the transaction flags, OTRANFLG (370), field.

372 (Type-C, OCLIPADR, 40 bytes)
The IP address of the originating client or Telnet client.

373 (Type-C, PHNTWKID, 8 bytes
The network identifier of the CICS system of an immediately previous task in another CICS system with which this task is associated.

374 (Type-C, PHAPPLID, 8 bytes
The APPLID of the CICS system of an immediately previous task in another CICS region with which this task is associated.

375 (Type-T, PHSTART, 8 bytes
The start time of the immediately previous task in another CICS system with which this task is associated.

376 (Type-P, PHTRANNO, 4 bytes
The task number of the immediately previous task in another CICS system with which this task is associated.

377 (Type-C, PHTRAN, 4 bytes
The transaction ID (TRANSID) of the immediately previous task in another CICS system with which this task is associated.

378 (Type-A, PHCOUNT, 4 bytes
The number of times there has been a request from one CICS system to another CICS system to initiate a task with which this task is associated.

402 (Type-A, EICTOTCT, 4 bytes)
The total number of EXEC CICS commands issued by the user task.

405 (Type-A, TIASKTCT, 4 bytes)
The number of EXEC CICS ASKTIME commands issued by the user task.

406 (Type-A, TITOTCT, 4 bytes)
The total number of EXEC CICS ASKTIME, CONVERTTIME, and FORMATTIME commands issued by the user task.

408 (Type-A, BFDGSTCT, 4 bytes)
The total number of EXEC CICS BIF DIGEST commands issued by the user task.

409 (Type-A, BFTOTCT, 4 bytes)
The total number of EXEC CICS BIF DEEDIT and BIF DIGEST commands issued by the user task.

415 (Type-A, ECSIGECT, 4 bytes)
The number of EXEC CICS SIGNAL EVENT commands issued by the user task.

416 (Type-A, ECEFOPCT, 4 bytes)
The number of event filter operations performed by the user task.

417 (Type-A, ECEVNTCT, 4 bytes)
The number of events captured by the user task.

418 (Type-A, ECSEVCCT, 4 bytes)
The number of synchronous emission events captured by the user task.

DFHDATA fields

DFHDATA owns the following performance class data fields:

179 (Type-A, IMSREQCT, 4 bytes)
The total number of IMS (DBCTL) requests issued by the user task.

180 (Type-A, DB2REQCT, 8 bytes)
The total number of DB2 EXEC SQL and Instrumentation Facility Interface (IFI) requests issued by the user task.

For more information on DB2 accounting and monitoring, see the *CICS DB2 Guide.*

186 (Type-S, IMSWAIT, 8 bytes)
The total elapsed time in which the user task waited for IMS (DBCTL) to service the IMS requests issued by the user task.

For more information, see “RMI elapsed and suspend time” on page 320 and “Transaction timing fields” on page 313.

Note: This field is a component of the task suspend time field, SUSPTIME (owner: DFHTASK, field ID: 014 and is also a component of the RMI suspend time field, RMISUSP (owner: DFHTASK, field ID: 171).

187 (Type-S, DB2RDYQW, 8 bytes)
The elapsed time in which the user task waited for a DB2 thread to become available.

For more general information on DB2 accounting and monitoring, see the *CICS DB2 Guide.*

For more information, see “RMI elapsed and suspend time” on page 320 and “Transaction timing fields” on page 313.

Note: This field is a component of the task suspend time field, SUSPTIME (group name: DFHTASK, field ID: 014 and is also a component of the RMI suspend time field, RMISUSP (owner: DFHTASK, field ID: 171).

188 (Type-S, DB2CONWT, 8 bytes)
The value of this field depends on the version of DB2 to which CICS is connected:

- When CICS is connected to DB2 Version 5 or earlier, and is therefore not exploiting the CICS open transaction environment (OTE), this field is the elapsed time in which the user task waited for a CICS subtask (TCB) to become available.
- When CICS is connected to DB2 Version 6 or later, and so is using the CICS open transaction environment (OTE), this field is the elapsed time in which the user task waited for a DB2 connection to become available for use with the user tasks open TCB.

For more general information on DB2 accounting and monitoring, see the *CICS DB2 Guide.*

For more information, see "RMI elapsed and suspend time" on page 320 and "Transaction timing fields" on page 313.

Note: This field is a component of the task suspend time field, SUSPTIME (group name: DFHTASK, field ID: 014 and is also a component of the RMI suspend time field, RMISUSP (owner: DFHTASK, field ID: 171).

For more general information on the open transaction environment (OTE), see the *CICS Application Programming Guide.*

189 (Type-S, DB2WAIT, 8 bytes)
The value of this field depends on the version of DB2 to which CICS is connected:

- When CICS is connected to DB2 Version 5 or earlier, and is therefore not exploiting the CICS open transaction environment (OTE), this field is the elapsed time in which the user task waited for DB2 to service the DB2 EXEC SQL and Instrumentation Facility Interface (IFI) requests issued by the user task.
- When CICS is connected to DB2 Version 6 or later, and so is using the CICS open transaction environment (OTE), this field does not apply and is zero. This is because the CICS-DB2 attachment facility uses open TCBs as the thread TCBs rather than using specially created subtask TCBs and as a result any waits in DB2 that occur on a CICS L8 mode TCB will not be visible to the CICS dispatcher domain.

For more general information on DB2 accounting and monitoring, see the *CICS DB2 Guide.*

For more information, see "RMI elapsed and suspend time" on page 320 and "Transaction timing fields" on page 313.

Note: This field is a component of the task suspend time field, SUSPTIME (group name: DFHTASK, field ID: 014 and is also a component of the RMI suspend time field, RMISUSP (owner: DFHTASK, field ID: 171).

395 (Type-A, WMQREQCT, 4 bytes)
The total number of WebSphere MQ requests issued by the user task.

396 (Type-S, WMQGETWT, 12 bytes)
The elapsed time the user task waited for WebSphere MQ to service the user task's GETWAIT request.

397 (Type-S, WMQASRBT, 12 bytes)
The WebSphere MQ SRB time this transaction spent processing WebSphere MQ

API requests. This field should be added to the transaction CPU time field (USRCPUT) when considering the measurement of the total CPU time consumed by a transaction. This field will be zero for point-to-point messaging activity, it will be non-zero where MQ API requests have resulted in pub/sub (publish and subscribe) type messaging.

DFHDEST fields

DFHDEST owns the following performance class data fields:

041 (Type-A, TDGETCT, 4 bytes)
The number of transient data GET requests issued by the user task.

042 (Type-A, TDPUTCT, 4 bytes)
The number of transient data PUT requests issued by the user task.

043 (Type-A, TDPURCT, 4 bytes)
The number of transient data PURGE requests issued by the user task.

091 (Type-A, TDTOTCT, 4 bytes)
The total number of transient data requests issued by the user task.

101 (Type-S, TDIOWTT, 4 bytes)
The elapsed time in which the user task waited for VSAM I/O to the intrapartition transient data set, DFHINTRA. For more information, see "Transaction timing fields" on page 313.

Note: This field is a component of the task suspend time field, SUSPTIME (owner: DFHTASK, field ID: 014).

DFHDOCH fields

DFHDOCH owns the following performance class data fields:

223 (Type-A, DHDELCT, 4 bytes)
The number of document handler DELETE requests issued by the user task.

226 (Type-C, DHCRECT, 4 bytes)
The number of document handler Create document requests issued by the user task.

227 (Type-C, DHINSCT, 4 bytes)
The number of document handler Insert data or Insert bookmark document requests issued by the user task.

228 (Type-C, DHSETCT, 4 bytes)
The number of document handler Set requests issued by the user task.

229 (Type-C, DHRETCT, 4 bytes)
The number of document handler Retrieve requests issued by the user task.

230 (Type-C, DHTOTCT, 4 bytes)
The total number of document handler requests issued by the user task.

How the EXEC CICS document API commands correspond to the document handler domain monitoring fields is shown in Table 23.

Table 23. EXEC CICS document commands related to the document handler control monitoring fields

EXEC CICS DOCUMENT command	Monitoring fields
CREATE	DHCRECT and DHTOTCT
INSERT	DHINSCT and DHTOTCT

Table 23. EXEC CICS document commands related to the document handler control monitoring fields (continued)

EXEC CICS DOCUMENT command	Monitoring fields
RETRIEVE	DHRETCT and DHTOTCT
SET	DHSETCT and DHTOTCT

Note: The number of "other" document handler requests can be calculated by subtracting the document handler requests DHCRECT, DHINSCT, DHSETCT, and DHRETCT from the total document handler request count, DHTOTCT. The "other" CICS internal document handler requests include Inquire document, Delete bookmark, Delete document, and Delete Data requests.

240 (Type-C, DHTOTDCL, 4 bytes)
The total length of all the documents created by the user task using the document handler EXEC CICS API requests.

Note: See the related performance data for DFHSOCK on page "DFHSOCK fields" on page 282 and DFHWEBB on page "DFHWEBB fields" on page 309.

For more information, see "CICS Web support" on page 327 and the *CICS Internet Guide.*

DFHEJBS fields

DFHEJBS owns the following performance class data fields:

311 (Type-C, CBSRVRNM, 4 bytes)
The CorbaServer for which this request processor instance is handling requests. Request processor transactions can be identified using byte 4 of the transaction flags field, TRANFLAG (owner: DFHTASK, field ID: 164).

312 (Type-A, EJBSACCT, 4 bytes)
The number of bean activations that have occurred in this request processor.

313 (Type-A, EJBSPACT, 4 bytes)
The number of bean passivations that have occurred in this request processor.

314 (Type-A, EJBCRECT, 4 bytes)
The number of bean creation calls that have occurred in this request processor.

315 (Type-A, EJBREMCT, 4 bytes)
The number of bean removal calls that have occurred in this request processor.

316 (Type-A, EJBTOTCT, 4 bytes)
The total for this request processor of activation, passivation, creation, removal and method calls (fields 312–316).

317 (Type-A, EJBMTHCT, 4 bytes)
The number of bean method calls run in this request processor.

DFHFEPI fields

DFHFEPI owns the following performance class data fields:

150 (Type-A, SZALLOCT, 4 bytes)
The number of FEPI conversations allocated by the user task. This number is incremented for each FEPI ALLOCATE POOL or FEPI CONVERSE POOL.

151 (Type-A, SZRCVCT, 4 bytes)
The number of FEPI RECEIVE requests issued by the user task. This number is also incremented for each FEPI CONVERSE request.

152 (Type-A, SZSENDCT, 4 bytes)
The number of FEPI SEND requests issued by the user task. This number is also incremented for each FEPI CONVERSE request.

153 (Type-A, SZSTRTCT, 4 bytes)
The number of FEPI START requests issued by the user task.

154 (Type-A, SZCHROUT, 4 bytes)
The number of characters sent through FEPI by the user task.

155 (Type-A, SZCHRIN, 4 bytes)
The number of characters received through FEPI by the user task.

156 (Type-S, SZWAIT, 8 bytes)
The elapsed time in which the user task waited for FEPI services. For more information, see "Transaction timing fields" on page 313.

Note: This field is a component of the task suspend time field, SUSPTIME (owner: DFHTASK, field ID: 014).

157 (Type-A, SZALLCTO, 4 bytes)
The number of times the user task timed out while waiting to allocate a conversation.

158 (Type-A, SZRCVTO, 4 bytes)
The number of times the user task timed out while waiting to receive data.

159 (Type-A, SZTOTCT, 4 bytes)
The total number of FEPI API and SPI requests issued by the user task.

For more information on FEPI, see the *CICS Front End Programming Interface User's Guide.*

DFHFILE fields

For a break down by individual file of some of the DFHFILE information, you can request transaction resource monitoring. See "CMF transaction resource class data fields" on page 334 for details.

DFHFILE owns the following performance class data fields:

036 (Type-A, FCGETCT, 4 bytes)
The number of file control GET requests issued by the user task.

037 (Type-A, FCPUTCT, 4 bytes)
The number of file control PUT requests issued by the user task.

038 (Type-A, FCBRWCT, 4 bytes)
The number of file control BROWSE requests issued by the user task.

039 (Type-A, FCADDCT, 4 bytes)
The number of file control ADD requests issued by the user task.

040 (Type-A, FCDELCT, 4 bytes)
The number of file control DELETE requests issued by the user task.

063 (Type-S, FCIOWTT, 8 bytes)
The elapsed time in which the user task waited for non-RLS file I/O.

For more information, see "Transaction timing fields" on page 313.

Note: This field is a component of the task suspend time field, SUSPTIME (owner: DFHTASK, field ID: 014).

070 (Type-A, FCAMCT, 4 bytes)
The number of times the user task invoked file access-method interfaces. This number excludes requests for file OPEN and CLOSE.

093 (Type-A, FCTOTCT, 4 bytes)
The total number of file control requests issued by the user task. This number *excludes* any request for OPEN, CLOSE, ENABLE or DISABLE of a file.

How the EXEC CICS file API commands correspond to the file control monitoring fields is shown in Table 24.

Table 24. EXEC CICS file commands related to the file control monitoring fields

EXEC CICS file command	Monitoring fields
READ	FCGETCT and FCTOTCT
READ UPDATE	FCGETCT and FCTOTCT
DELETE (after READ UPDATE)	FCDELCT and FCTOTCT
DELETE (with RIDFLD)	FCDELCT and FCTOTCT
REWRITE	FCPUTCT and FCTOTCT
WRITE	FCADDCT and FCTOTCT
STARTBR	FCTOTCT
READNEXT	FCBRWCT and FCTOTCT
READNEXT UPDATE	FCBRWCT and FCTOTCT
READPREV	FCBRWCT and FCTOTCT
READPREV UPDATE	FCBRWCT and FCTOTCT
ENDBR	FCTOTCT
RESETBR	FCTOTCT
UNLOCK	FCTOTCT

Note: The number of STARTBR, ENDBR, RESETBR and UNLOCK file control requests can be calculated by subtracting the file request counts FCGETCT, FCPUTCT, FCBRWCT, FCADDCT and FCDELCT from the total file control request count, FCTOTCT.

174 (Type-S, RLSWAIT, 8 bytes)
The elapsed time in which the user task waited for RLS file I/O.

For more information, see “Transaction timing fields” on page 313.

Note: This field is a component of the task suspend time field, SUSPTIME (owner: DFHTASK, field ID: 014).

175 (Type-S, RLSCPUT, 8 bytes)
The RLS File Request CPU (SRB) time field (RLSCPUT) is the SRB CPU time this transaction spent processing RLS file requests. This field should be added to the transaction CPU time field (USRCPUT) when considering the measurement of the total CPU time consumed by a transaction.

However, this field cannot be considered a subset of any other single CMF field (including RLSWAIT). This is because the RLS file requests run asynchronously under an MVS SRB which can be running in parallel with the

requesting transaction. It is also possible for the SRB to complete its processing before the requesting transaction waits for the RLS file request to complete.

Note: This clock field could contain a CPU time of zero with a count of greater than zero. This is because the CMF timing granularity is measured in 16 microsecond units and the RLS file requests might complete in less than that time unit.

176 (Type-S, CFDTWAIT, 8 bytes)
The elapsed time in which the user task waited for a data table access request to the coupling facility data table server to complete.

For more information, see "Transaction timing fields" on page 313.

See the *CICS System Definition Guide* for more information on the CICS data servers.

Note: This field is a component of the task suspend time field, SUSPTIME (owner: DFHTASK, field ID: 014).

DFHJOUR fields

DFHJOUR owns the following performance class data fields:

010 (Type-S, JCIOWTT, 8 bytes)
The elapsed time in which the user task waited for journal (logstream) I/O.

For more information, see "Transaction timing fields" on page 313.

Note: This field is a component of the task suspend time field, SUSPTIME (owner: DFHTASK, field ID: 014).

058 (Type-A, JNLWRTCT, 4 bytes)
The number of journal write requests issued by the user task.

172 (Type-A, LOGWRTCT, 4 bytes)
The number of CICS logstream write requests issued by the user task.

DFHMAPP fields

DFHMAPP owns the following performance class data fields:

050 (Type-A, BMSMAPCT, 4 bytes)
The number of BMS RECEIVE MAP requests issued by the user task. This field corresponds to the number of RECEIVE MAP requests that did not incur a terminal I/O and the number of RECEIVE MAP FROM requests.

051 (Type-A, BMSINCT, 4 bytes)
The number of BMS RECEIVE MAP requests issued by the user task that did incur a terminal I/O.

052 (Type-A, BMSOUTCT, 4 bytes)
The number of BMS SEND MAP requests issued by the user task.

090 (Type-A, BMSTOTCT, 4 bytes)
The total number of BMS requests issued by the user task. This field is the sum of the BMS RECEIVE MAP, RECEIVE MAP FROM and SEND MAP requests as well as the number of BMS SEND TEXT and SEND CONTROL requests issued by the user task.

DFHPROG fields

DFHPROG owns the following performance class data fields:

055 (Type-A, PCLINKCT, 4 bytes)
The number of program LINK requests issued by the user task.

056 (Type-A, PCXCTLCT, 4 bytes)
The number of program XCTL requests issued by the user task.

057 (Type-A, PCLOADCT, 4 bytes)
The number of program LOAD requests issued by the user task.

071 (Type-C, PGMNAME, 8 bytes)
The name of the initial application program invoked at transaction attach.

Note these points about remote transactions:

- If the CICS definition of the remote transaction does not specify a program name, this field contains blanks.
- If the CICS definition of the remote transaction specifies a program name, this field contains the name of the specified program. (This program is not necessarily the program that is run on the remote system.)

For a dynamically routed transaction, if the dynamic transaction routing program routes the transaction locally and specifies an alternative program name, this field contains the name of the alternative program.

For a dynamic program link (DPL) mirror transaction, this field contains the initial program name specified in the dynamic program LINK request. DPL mirror transactions can be identified using byte 1 of the transaction flags, TRANFLAG (164), field.

For Web service applications, this field contains the target application program name.

For a Web alias transaction, this field contains the initial application program name called by the alias transaction. Web alias transactions can be identified using byte 1 of the transaction flags, TRANFLAG (164), field.

For an ONC RPC transaction, this field contains the initial application program name called by the alias transaction. ONC RPC transactions can be identified using byte 1 of the transaction flags, TRANFLAG (164), field.

For an ECI over TCP/IP transaction, this field contains the name of the application program specified in the External Call Interface (ECI) request from the client application.

Byte 4 of the transaction flags field, TRANFLAG (owner: DFHTASK, field ID: 164) can also be used to provide additional detail on the transaction's origin. See “DFHTASK fields” on page 287 for more details on the transaction origin type.

Table 25 shows the transaction type values from byte 1 of the transaction flags field, TRANFLAG (owner: DFHTASK, field ID: 164) and its relationship with the transaction routing sysid field, RSYSID (owner: DFHCICS, field ID: 130) and the initial program name field, PGMNAME (owner: DFHPROG, field ID: 071).

Table 25. Transaction routing sysid and initial program name relationships

TRANFLAG (Byte 1)	RSYSID	Program Name
X'00' - User transaction	'xxxx'	N/A
X'00' - User transaction	null	Initial application program
X'80' - System transaction	N/A	Initial application program
X'40' - Mirror transaction	N/A	Mirror program

Table 25. Transaction routing sysid and initial program name relationships (continued)

TRANFLAG (Byte 1)	RSYSID	Program Name
X'20' - DPL mirror transaction	N/A	Initial application program
X'10' - ONC RPC alias transaction	N/A	Initial application program
X'08' - WEB alias transaction	N/A	Initial application program
X'04' - 3270 bridge transaction	N/A	Initial application program
X'01' - CICS BTS run transaction	N/A	Initial application program

072 (Type-A, PCLURMCT, 4 bytes)
The number of program LINK URM (user-replaceable module) requests issued by the user task.

A user-replaceable module is a CICS-supplied program that is always invoked at a particular point in CICS processing as if it were part of the CICS code. You can modify the supplied program by including your own logic, or you can replace it with a version that you write yourself.

The CICS-supplied user-replaceable modules are:

- bridge exit program - DFH0CBRE, DFH0CBAE, DFHWBLT, or user specified
- CICS JVM interface program - DFHJVMAT
- distributed dynamic routing program - DFHDSRP (or user specified)
- document template exit program - user specified on the DOCTEMPLATE resource definition
- dynamic routing program - DFHDYP (or user specified)
- Internet Inter-ORB Protocol (IIOP) inbound request security exit program - DFHXOPUS
- Java hot-pooling pre-call program - DFHJHPAT
- node error program - DFHNEP
- program autoinstall program - DFHPGAxX (or user specified)
- program error program - DFHPEP
- terminal autoinstall programs - DFHZATDX/DFHZATDY
- terminal error program - DFHTEP
- transaction restart program - DFHRTY
- CICS-DBCTL interface status program - DFHDBUEX
- CICS-DB2 dynamic plan exit program - DSNCUEXT
- Enterprise JavaBeans (EJB) Distinguished Name program - DFHEJDNx
- Enterprise JavaBeans (EJB) event program - DFHEJEP

For detailed information on the CICS user-replaceable modules, see the *CICS Customization Guide.*

073 (Type-A, PCDPLCT, 4 bytes)
The number of distributed program link (DPL) requests issued by the user task.

113 (Type-C, ABCODEO, 4 bytes)
If the transaction abends, this field contains the 4 character abend code of the original abend.

114 (Type-C, ABCODEC, 4 bytes)
If the transaction abends, this field contains the 4 character abend code of the current abend.

115 (Type-S, PCLOADTM, 8 bytes)
The total elapsed time in which the user task waited for program fetches from the DFHRPL program library. Only fetches for programs with installed program definitions or autoinstalled as a result of application program requests are included in this figure. Installed programs residing in the LPA are not included because they do not incur a physical fetch from a program library.

For more information, see "Program load time" on page 319.

286 (Type-A, PCDLCSDL, 4 bytes)
The total length, in bytes, of the data in the containers of all the distributed program link (DPL) requests, with the CHANNEL option, issued by the user task. This total includes the length of any headers to the data.

287 (Type-A, PCDLCRDL, 4 bytes)
The total length, in bytes, of the data in the containers of all the distributed program link (DPL) RETURN requests, with the CHANNEL option, issued by the user task. This total includes the length of any headers to the data.

306 (Type-A, PCLNKCCT, 4 bytes)
Number of local program LINK requests, with the CHANNEL option, issued by the user task. Note: This field is a subset of the program LINK requests field, PCLINKCT (055).

307 (Type-A, PCXCLCCT, 4 bytes)
Number of program XCTL requests, with the CHANNEL option, issued by the user task. Note: This field is a subset of the program XCTL requests field, PCXCTLCT (056).

308 (Type-A, PCDPLCCT, 4 bytes)
Number of program distributed program link (DPL) requests, with the CHANNEL option, issued by the user task. Note: This field is a subset of the distributed program link requests field, PCDPLCT (073).

309 (Type-A, PCRTNCCT, 4 bytes)
Number of remote pseudoconversational RETURN requests, with the CHANNEL option, issued by the user task.

310 (Type-A, PCRTNCDL, 4 bytes)
The total length, in bytes, of the data in the containers of all the remote pseudoconversational RETURN CHANNEL commands issued by the user task. This total includes the length of any headers to the data.

DFHRMI fields

DFHRMI fields are present in the performance class record only if RMI=YES is specified on the DFHMCT TYPE=INITIAL macro. For more information, see the RMI parameter on the DFHMCT TYPE=INITIAL macro in the *CICS Customization Guide.*

DFHRMI owns the following performance class data fields. For more information, see "RMI elapsed and suspend time" on page 320.

001 (Type-S, RMITOTAL, 8 bytes)
The total elapsed time spent in the CICS Resource Manager Interface (RMI). For more information, see "Transaction response time" on page 315 and "Clocks and time stamps" on page 313.

002 (Type-S, RMIOTHER, 8 bytes)
The total elapsed time spent in the CICS RMI for resource manager requests other than DB2, DBCTL, EXEC DLI, WebSphere MQ, CICSPlex® SM, and CICS TCP/IP socket requests.

003 (Type-S, RMIDB2, 8 bytes)
The total elapsed time spent in the CICS RMI for DB2 requests.

004 (Type-S, RMIDBCTL, 8 bytes)
The total elapsed time spent in the CICS RMI for DBCTL requests.

005 (Type-S, RMIEXDLI, 8 bytes)
The total elapsed time spent in the CICS RMI for EXEC DLI requests.

006 (Type-S, RMIMQM, 8 bytes)
The total elapsed time spent in the CICS RMI for WebSphere MQ requests.

007 (Type-S, RMICPSM, 8 bytes)
The total elapsed time spent in the CICS RMI for CICSPlex SM requests.

008 (Type-S, RMITCPIP, 8 bytes)
The total elapsed time spent in the CICS RMI for CICS TCP/IP socket requests.

DFHSOCK fields

DFHSOCK owns the following performance class data fields relating to the CICS (Socket Domain) support for TCP/IP:

241 (Type-S, SOIOWTT, 8 bytes)
The elapsed time in which the user task waited for inbound socket I/O. The outbound socket I/O wait time is measured in field ID: 299.

For more information, see "Transaction timing fields" on page 313.

Note: This field is a component of the task suspend time field, SUSPTIME (owner: DFHTASK, field ID: 014).

242 (Type-A, SOBYENCT, 4 bytes)
The number of bytes encrypted by the secure sockets layer (SSL) for the user task.

243 (Type-A, SOBYDECT, 4 bytes)
The number of bytes decrypted by the secure sockets layer (SSL) for the user task.

244 (Type-C, CLIPADDR, 16 bytes): IPIC only
The Client IP address in the form of *nnn.nnn.nnn.nnn* or Telnet client IP address.

245 (Type-C, TCPSRVCE, 8 bytes)
The name of the installed TCP/IP service resource definition from which the transaction was initiated.

246 (Type-A, PORTNUM, 4 bytes)
The port number of the installed TCP/IP service resource definition from which the transaction was initiated.

288 (Type-A, ISALLOCT, 4 bytes): IPIC only
The number of allocate session requests issued by the user task for sessions using IPIC.

289 (Type-A, SOEXTRCT, 4 bytes)
The number of EXTRACT TCPIP and EXTRACT CERTIFICATE requests issued by the user task.

290 (Type-A, SOCNPSCT, 4 bytes)
The number of non-persistent outbound socket create requests issued by the user task.

291 (Type-A, SOCPSCT, 4 bytes)
The number of persistent outbound socket create requests issued by the user task.

292 (Type-A, SONPSHWM, 4 bytes)
The peak number (high-water mark) of non-persistent outbound sockets owned by the user task.

293 (Type-A, SOPSHWM, 4 bytes)
The peak number (high-water mark) of persistent outbound sockets owned by the user task.

294 (Type-A, SORCVCT, 4 bytes)
The number of outbound socket RECEIVE requests issued by the user task.

295 (Type-A, SOCHRIN, 4 bytes)
The number of characters received by outbound socket RECEIVE requests issued by the user task.

296 (Type-A, SOSENDCT, 4 bytes)
The number of outbound socket SEND requests issued by the user task.

297 (Type-A, SOCHROUT, 4 bytes)
The number of characters sent by outbound socket SEND requests issued by the user task.

298 (Type-A, SOTOTCT, 4 bytes)
The total number of inbound and outbound socket requests issued by the user task.

299 (Type-S, SOOIOWTT (OSOWAIT), 8 bytes)
The elapsed time in which the user task waited for outbound socket I/O. The inbound socket I/O wait time is measured in field ID: 241.

For more information, see "Transaction timing fields" on page 313.

Note: This field is a component of the task suspend time field, SUSPTIME (owner: DFHTASK, field ID: 014).

300 (Type-S, ISIOWTT, 8 bytes): IPIC only
The elapsed time for which a user task waited for control at this end of an IPIC connection.

301 (Type-A, SOMSGIN1, 4 bytes)
The number of inbound socket RECEIVE requests issued by the user task.

302 (Type-A, SOCHRIN1, 4 bytes)
The number of characters received by inbound socket RECEIVE requests issued by the user task.

303 (Type-A, SOMSGOU1, 4 bytes)
The number of inbound socket SEND requests issued by the user task.

304 (Type-A, SOCHROU1, 4 bytes)
The number of characters sent by inbound socket SEND requests issued by the user task.

305 (Type-C, ISIPCNNM, 8 bytes): IPIC only
The name of the IPIC connection whose TCP/IP service attached the user task.

318 (Type-C, CLIPADDR, 40 bytes): IPIC only
The IP address of the client or Telnet client.

330 (Type-A, CLIPPORT, 4 bytes): IPIC only
The port number of the client or Telnet client.

See "CICS TCP/IP support" on page 328 for additional information and related performance data for DFHDOCH on page "DFHDOCH fields" on page 274 and DFHWEBB on page "DFHWEBB fields" on page 309.

For more information, see the *CICS Internet Guide* and the *CICS External Interfaces Guide.*

DFHSTOR user storage fields

DFHSTOR owns the following performance class data fields relating to user storage. For additional information on the user storage fields, see "User storage" on page 322.

033 (Type-A, SCUSRHWM, 4 bytes)
Maximum amount (high-water mark) of user-storage allocated to the user task below the 16MB line, in the user dynamic storage area (UDSA).

054 (Type-A, SCUGETCT, 4 bytes)
The number of user-storage GETMAIN requests issued by the user task for storage below the 16MB line, in the UDSA.

095 (Type-A, SCUSRSTG, 8 bytes)
The storage occupancy of the user task below the 16MB line, in the UDSA. This is a measure of the area under the curve of the storage in use against elapsed time. For more information, see "User storage occupancy" on page 322.

105 (Type-A, SCUGETCT, 4 bytes)
The number of user-storage GETMAIN requests issued by the user task for storage above the 16MB line, in the EUDSA.

106 (Type-A, SCUSRHWM, 4 bytes)
Maximum amount (high-water mark) of user-storage allocated to the user task above the 16MB line, in the user dynamic storage area (EUDSA).

107 (Type-A, SCUSRSTG, 8 bytes)
The storage occupancy of the user task above the 16MB line, in the EUDSA. This is a measure of the area under the curve of the storage in use against elapsed time. For more information, see "User storage occupancy" on page 322.

116 (Type-A, SC24CHWM, 4 bytes)
Maximum amount (high-water mark) of user-storage allocated to the user task below the 16MB line, in the CICS dynamic storage area (CDSA).

117 (Type-A, SCCGETCT, 4 bytes)
The number of user-storage GETMAIN requests issued by the user task for storage below the 16MB line, in the CDSA.

118 (Type-A, SC24COCC, 8 bytes)
The storage occupancy of the user task below the 16MB line, in the CDSA. This is a measure of the area under the curve of the storage in use against elapsed time. For more information, see "User storage occupancy" on page 322.

119 (Type-A, SC31CHWM, 4 bytes)
Maximum amount (high-water mark) of user-storage allocated to the user task above the 16MB line, in the CICS dynamic storage area (CDSA).

120 (Type-A, SCCGETCT, 4 bytes)
The number of user-storage GETMAIN requests issued by the user task for storage above the 16MB line, in the ECDSA.

121 (Type-A, SC31COCC, 8 bytes)
The storage occupancy of the user task above the 16MB line, in the ECDSA. This is a measure of the area under the curve of the storage in use against elapsed time. For more information, see "User storage occupancy" on page 322.

The following table shows the DFHSTOR user storage fields, what they measure, and in which storage area.

Table 26. User storage field ID cross-reference

	CDSA	UDSA	ECDSA	EUDSA
GETMAIN count	117	054	120	105
High-water mark	116	033	119	106
Occupancy	118	095	121	107

DFHSTOR shared storage fields

DFHSTOR owns the following performance class data fields relating to shared storage. For additional information on the shared storage fields, see "Shared storage" on page 323.

144 (Type-A, SC24SGCT, 4 bytes)
The number of storage GETMAIN requests issued by the user task for shared storage below the 16MB line, in the CDSA or SDSA.

145 (Type-A, SC24GSHR, 4 bytes)
The number of bytes of shared storage GETMAINed by the user task below the 16MB line, in the CDSA or SDSA.

146 (Type-A, SC24FSHR, 4 bytes)
The number of bytes of shared storage FREEMAINed by the user task below the 16MB line, in the CDSA or SDSA.

147 (Type-A, SC31SGCT, 4 bytes)
The number of storage GETMAIN requests issued by the user task for shared storage above the 16MB line, in the ECDSA or ESDSA.

148 (Type-A, SC31GSHR, 4 bytes)
The number of bytes of shared storage GETMAINed by the user task above the 16MB line, in the ECDSA or ESDSA.

149 (Type-A, SC31FSHR, 4 bytes)
The number of bytes of shared storage FREEMAINed by the user task above the 16MB line, in the CDSA or SDSA.

DFHSTOR program storage fields

DFHSTOR owns the following performance class data fields relating to program storage. For additional information on the program storage fields, see "Program storage" on page 324.

087 (Type-A, PCSTGHWM, 4 bytes)
The maximum amount (high-water mark) of program storage in use by the user task both *above* and *below* the 16MB line.

108 (Type-A, PC24BHWM, 4 bytes)
The maximum amount (high-water mark) of program storage in use by the user task below the 16MB line. This field is a subset of PCSTGHWM (field ID: 087) that resides below the 16MB line.

122 (Type-A, PC31RHWM, 4 bytes)
The maximum amount (high-water mark) of program storage in use by the user task above the 16MB line, in the extended read-only dynamic storage area (ERDSA). This field is a subset of PC31AHWM (field ID: 139) that resides above the 16MB line.

139 (Type-A, PC31AHWM, 4 bytes)
The maximum amount (high-water mark) of program storage in use by the user task above the 16MB line. This field is a subset of PCSTGHWM (field ID: 087) that resides above the 16MB line.

142 (Type-A, PC31CHWM, 4 bytes)
The maximum amount (high-water mark) of program storage in use by the user task above the 16MB line, in the extended CICS dynamic storage area (ECDSA). This field is a subset of PC31AHWM (field ID: 139) that resides in the ECDSA.

143 (Type-A, PC24CHWM, 4 bytes)
The maximum amount (high-water mark) of program storage in use by the user task below the 16MB line, in the CICS dynamic storage area (CDSA). This field is a subset of PC24BHWM (field ID: 108) that resides in the CDSA.

160 (Type-A, PC24SHWM, 4 bytes)
The maximum amount (high-water mark) of program storage in use by the user task below the 16MB line, in the shared dynamic storage area (SDSA). This field is a subset of PC24BHWM (field ID: 108) that resides in the SDSA.

161 (Type-A, PC31SHWM, 4 bytes)
The maximum amount (high-water mark) of program storage in use by the user task above the 16MB line, in the extended shared dynamic storage area (ESDSA). This field is a subset of PC31AHWM (field ID: 139) that resides in the ESDSA.

162 (Type-A, PC24RHWM, 4 bytes)
The maximum amount (high-water mark) of program storage in use by the user task below the 16MB line, in the read-only dynamic storage area (RDSA). This field is a subset of PC24BHWM (field ID: 108) that resides in the RDSA.

DFHSYNC fields

DFHSYNC owns the following performance class data fields relating to syncpoint activity:

060 (Type-A, SPSYNCCT, 4 bytes)
The total number of syncpoint requests issued by the user task. This also includes:

- The SYNCPOINT implicitly issued as part of the task-detach processing
- The SYNCPOINT issued at PSB termination for any DBCTL activity

173 (Type-S, SYNCTIME, 8 bytes)
The elapsed time in which the user task was dispatched or suspended processing syncpoint requests.

For more information, see “Syncpoint elapsed time” on page 319.

177 (Type-S, SRVSYWTT, 8 bytes)
The elapsed time in which the user task waited for completion of syncpoint or resynchronization processing using the coupling facility data table server to complete.

Note: This field is a component of the task suspend time field, SUSPTIME (owner: DFHTASK, field ID: 014).

196 (Type-S, SYNCDLY, 8 bytes)
The elapsed time in which the user task waited for a syncpoint request to be issued by it's parent transaction. The user task was executing as a result of the parent transaction issuing a CICS Business Transaction Services (BTS) Run ACQPROCESS or Run Activity requests to run a process or activity synchronously.

For more information on CICS BTS, see the *CICS Business Transaction Services.*

For more information, see "Syncpoint elapsed time" on page 319 and "Transaction timing fields" on page 313.

Note: This field is a component of the task suspend time field, SUSPTIME (owner: DFHTASK, field ID: 014).

199 (Type-S, OTSINDWT, 8 bytes)
The elapsed time in which the user task was dispatched or suspended indoubt whilst processing a syncpoint for an Object Transaction Service (OTS) Syncpoint request.

For more information, see "Syncpoint elapsed time" on page 319.

DFHTASK fields

DFHTASK owns the following performance class data fields:

001 (Type-C, TRAN, 4 bytes)
Transaction identification.

004 (Type-C, TTYPE, 4 bytes)
Type of transaction start (Start Code or Start Type):

TO The transaction was started (attached) by input of the transaction ID from the terminal user.

S Attached by automatic transaction initiation (ATI) without data. The transaction was started (attached) by an application program using the EXEC CICS START TRANSID('xxxx') ... API command. CICS internal transactions such as CATR, CEJR, CESN, CQRY, CRPM, CRSQ, CSFU, CSGM, CXRE, and CWBG are just some examples of CICS transactions that use this start type.

SD Attached by automatic transaction initiation (ATI) with data. The transaction was started (attached) by an application program using the EXEC CICS START TRANSID('xxxx') FROM(xxxx) ... API command. CICS internal transactions such as CLS1 is an example of a transaction that uses this start type.

QD The transaction was started (attached) because the trigger level of an intrapartition transient data queue was reached. If the transaction is not associated with a terminal facility, the Transaction Facility Name (field: FCTYNAME, owner: DFHTASK, field ID: 163) provides the name of the transient data queue ID.

U The transaction was started (attached) by a CICS internal function generally as a result of some user request. CICS internal transactions such as CATA, CATD, CEJR, CESC, CEX2, CFOR, CFQR, CFQS, CFTL, CGRP, CIEP, CIOF, CIOR, CIRP, CITS, CJTR, CLQ1, CLQ2, CLS2, COTR, COVR, CPLT, CPMI, CRSY, CSFR, CSHQ, CSNC, CSNE, CSOL, CSSY, CSTE, CSZI, CWBA, and CWXN are just some examples of the CICS transactions that use this start type. In addition to CICS internal functions, transaction's that are being run under the control of the CICS Execution Diagnostic Facility transaction, CEDF, are also started (attached) with this start type.

TP Attached from terminal (TCTTE) transaction ID. The preset transaction was started (attached) by input from the terminal user or by the previous transaction using the EXEC CICS RETURN TRANSID('xxxx') IMMEDIATE ... API command. The transaction ID can be preset either from the terminal definition, from using the CRTE routing transaction, or by the previous transaction's application program using the EXEC CICS RETURN TRANSID('xxxx') ... API command with or without the IMMEDIATE option specified. Some examples of CICS transactions which use this start type are: CESN (except when used as the initial good morning transaction), CRTE (when invoked on the routed system), and CSSF when invoked as part of a 'CRTE CANCEL' (the initial CRTE transaction which establishes the routing session uses the start type 'TO').

SZ Attached by the Front End Programming Interface (FEPI). The transaction was started (attached) as the *receive program* by the Front End Programming Interface as a result of inbound data. In addition to inbound data arriving, the *receive program* is also started (attached) if the time limit set by a FEPI START command expires, the session is lost, or anything that causes a FEPI RECEIVE command to complete. See the *CICS Front End Programming Interface User's Guide* for more information on FEPI *started tasks.*

007 (Type-S, USRDISPT, 12 bytes)
Total elapsed time during which the user task was dispatched on each CICS TCB under which the task ran. The TCB modes managed by the CICS dispatcher are: QR, RO, CO, FO, SZ, RP, SL, SP, SO, EP, J8, J9, L8, L9, S8, TP, T8, X8, X9, JM, and D2. Be aware that, for each CICS release, new TCB modes might be added to this list, or obsolete TCB modes might be removed.

008 (Type-S, USRCPUT, 12 bytes)
Processor time for which the user task was dispatched on each CICS TCB under which the task ran. The TCB modes managed by the CICS dispatcher are: QR, RO, CO, FO, SZ, RP, SL, SP, SO, EP, J8, J9, L8, L9, S8, TP, T8, X8, X9, JM, and D2. Be aware that, for each CICS release, new TCB modes might be added to this list, or obsolete TCB modes might be removed.

014 (Type-S, SUSPTIME, 12 bytes)
The total elapsed suspend (wait) time for which the user task was suspended by the CICS dispatcher domain. This includes:

- The task suspend (wait) time.
- The elapsed time that the transaction waited for its first dispatch. This also includes any delay incurred because of the limits set for this transaction's transaction class (if any) or by the system parameter MXT being reached by this transaction.
- The elapsed time waiting for redispatch after a suspended task has been resumed.

For more information, see "Transaction suspend (wait) time" on page 315.

031 (Type-P, TRANNUM, 4 bytes)
The transaction identification number.

Note: The transaction number field is normally a 4-byte packed decimal number. However, some CICS system tasks are identified by special characters in this field as follows:
III for system initialization tasks
TCP for the terminal control task

These special identifiers are placed in bytes 2 through 4. Byte 1 is blank (X'40') before the terminal control TCP identifier, and a null value (X'00') before the others.

059 (Type-A, ICPUINCT, 4 bytes)
The number of Interval Control START requests issued by the user task.

064 (Type-A, TASKFLAG, 4 bytes)
Task error flags, a string of 32 bits used for signaling unusual conditions occurring during the user task:

Bit 0
Reserved.

Bit 1
The CICS Monitoring Facility (CMF) detected an attempt to start a user clock that was already running, or to stop one that was not running.

Bits 2-31
Reserved.

065 (Type-A, ICSTACCT, 4 bytes)
The total number of local interval control START requests, with the CHANNEL option, issued by the user task.

066 (Type-A, ICTOTCT, 4 bytes)
The total number of Interval Control Start, Cancel, Delay, and Retrieve requests issued by the user task.

Note: The number of interval control Cancel, Delay, and Retrieve requests can be calculated by subtracting the interval control request count ICPUINCT from the total interval control request count, ICTOTCT.

082 (Type-C, TRNGRPID, 28 bytes)
The transaction group ID is assigned at transaction attach time, and can be used to correlate the transactions that CICS runs for the same incoming work request (for example, the CWXN and CWBA transactions for Web requests).

This transaction group ID relationship is particularly useful when applied to the requests that originate through the CICS Web support (CWS), IIOP, ECI over TCP/IP, or the 3270 bridge interface, as indicated by the transaction origin in byte 4 of the transaction flags field (owner: DFHTASK, field ID: 164). See below for more details on the transaction origin type.

For more information, see “Correlating performance class data” on page 325 and the “Transaction Group report” on page 76.

097 (Type-C, NETUOWPX, 20 bytes)
The fully qualified name by which the originating system is known to the VTAM network. This name is assigned at attach time using either the netname derived from the terminal (when the task is attached to a local terminal), or the netname passed as part of an IRC (MRO) or ISC (APPC) attach header. At least three padding bytes (X'00') are present at the right end of the name.

If the originating terminal is VTAM across an ISC APPC or IRC link, the NETNAME is the *networkid.LUname*. If the terminal is non-VTAM, the NETNAME is *networkid.generic_APPLID*.

All originating information is passed as part of an ISC LUTYPE6.1 attach header has the same format as the non-VTAM terminal originators above.

When the originator is communicating over an external CICS interface (EXCI) session, the name is a concatenation of:

```
'DFHEXCIU | .       | MVS ID    | Address Space Id (ASID)'
 8 bytes  | 1 byte  | 4 bytes   | 4 bytes
```

derived from the originating system. That is, the name is a 17-byte LU name consisting of:

- An 8-byte eye-catcher set to 'DFHEXCIU'.
- A 1-byte field containing a period '.'.
- A 4-byte field containing the MVS ID, in characters, under which the client program is running.
- A 4-byte field containing the address space ID (AS ID) in which the client program is running. This field contains the 4-character EBCDIC representation of the 2-byte hexadecimal address space ID.

For more information on the external CICS interface (EXCI), see the *CICS External Interfaces Guide.*

Note: That it is possible for transactions that are attached without a terminal or session facility to be given the same network unit-of-work netname in the format of *networkid.generic_APPLID.*

For more information, see “Correlating performance class data” on page 325 and the “Cross-System Work report” on page 69.

098 (Type-C, NETUOWSX, 8 bytes)

The name by which the network unit-of-work ID is known within the originating system. This name is assigned at transaction attach time using either a STCK-derived token created by the originating system, or the network unit-of-work ID passed as part of an IRC (MRO) or ISC (APPC) attach function management header (FMH).

The first six bytes of this field are a binary value derived from the system clock of the originating system and which can wrap round at intervals of several months.

The last two bytes of this field are a syncpoint sequence count. This count might change during the life of the task as a result of syncpoint activity.

For CICS Business Transaction Services (BTS) transactions, the network unit-of-work ID is also passed to a transaction that is invoked synchronously by an application program issuing either a CICS BTS run ACQPROCESS synchronous or run activity synchronous command.

Note: When using MRO or ISC, the NETUOWSX field can be combined with the NETUOWPX field (field ID: 097) to uniquely identify a task across each CICS system. It must be combined with the NETUOWPX because the NETUOWSX field on its own is unique only to the originating CICS system.

For more information, see “Correlating performance class data” on page 325 and “Cross-System Work report” on page 69.

102 (Type-S, DISPWTT, 12 bytes)
The elapsed time for which the user task waited for redispatch by the CICS dispatcher domain. This is the aggregate of the wait times between each wait event completion and the user task being redispatched by the CICS dispatcher domain.

Note:

1. This field does not include the elapsed time spent waiting for the first dispatch.
2. This field is a component of the task suspend time field, SUSPTIME (owner: DFHTASK, field ID: 014).

109 (Type-C, TRANPRI, 4 bytes)
The transaction priority of the task when monitoring of the task was initialized at transaction attach.

123 (Type-S, GNQDELAY, 12 bytes)
The elapsed time in which the user task waited for a CICS task control global enqueue.

For more information, see "Transaction timing fields" on page 313.

Note: This field is a component of the task suspend time field, SUSPTIME (owner: DFHTASK, field ID: 014).

124 (Type-C, BRDGTRAN, 4 bytes)
For those transactions that are attached by the CICS 3270 Bridge interface, this field contains the name of the bridge listener transaction that invoked the transaction. A bridge transaction can be identified using byte 1 of the transaction flags field, TRANFLAG (owner: DFHTASK, field ID: 164).

125 (Type-S, DSPDELAY, 12 bytes)
The elapsed time in which the user task waited for the first dispatch by the CICS dispatcher domain.

Note: This field is a component of the task suspend time field, SUSPTIME (owner: DFHTASK, field ID: 014).

126 (Type-S, TCLDELAY, 12 bytes)
The elapsed time in which the user task waited for first dispatch which was delayed because of the limits set for this transaction's transaction class. The name of the transaction class for this transaction can be found in the TCLSNAME field, (owner: DFHTASK, field ID: 166).

For more information, see "Transaction timing fields" on page 313.

Note: This field is a component of the task suspend time field, SUSPTIME (owner: DFHTASK, field ID: 014) and the first dispatch delay time field, DSPDELAY (owner: DFHTASK, field ID: 125).

127 (Type-S, MXTDELAY, 12 bytes)
The elapsed time in which the user task waited for first dispatch which was delayed because of the limits set by the MXT system parameter being reached.

For more information, see "Transaction timing fields" on page 313.

Note: This field is a component of the task suspend time field, SUSPTIME (owner: DFHTASK, field ID: 014) and the first dispatch delay time field, DSPDELAY (owner: DFHTASK, field ID: 125).

128 (Type-S, LMDELAY, 12 bytes)
The elapsed time in which the user task waited to acquire a lock on a resource. A user task cannot explicitly acquire a lock on a resource, but many CICS modules lock resources on behalf of user tasks using the CICS lock manager (LM) domain.

For more information, see "Transaction timing fields" on page 313.

For more information about the CICS lock manager, see the *CICS Problem Determination Guide.*

Note: This field is a component of the task suspend time field, SUSPTIME (owner: DFHTASK, field ID: 014).

129 (Type-S, ENQDELAY, 12 bytes)
The elapsed time in which the user task waited for a CICS task control local enqueue. For more information, see "Transaction timing fields" on page 313

Note: This field is a component of the task suspend time field, SUSPTIME (owner: DFHTASK, field ID: 014).

132 (Type-T, RMUOWID, 8 bytes)
The identifier of the local unit of work (unit of recovery) for this task. The local unit-of-recovery values are used to synchronize recovery operations amongst CICS systems and other resource managers, such as IMS (DBCTL) and DB2.

163 (Type-C, FCTYNAME, 4 bytes)
Transaction facility name. This field is null if the transaction is not associated with a facility. The transaction facility type (if any) can be identified using byte 0 of the transaction flags field, TRANFLAG (owner: DFHTASK, field ID: 164).

164 (Type-A, TRANFLAG, 8 bytes)
Transaction flags, a string of 64 bits used for signaling transaction definition and status information:

Byte 0 Transaction facility identification. The field identifies the type of resource that is the transaction's principal facility and can have one of the following values:
- **Bit 0** Transaction facility name = none
- **Bit 1** Transaction facility name = terminal
- **Bit 2** Transaction facility name = surrogate
- **Bit 3** Transaction facility name = destination
- **Bit 4** Transaction facility name = 3270 bridge
- **Bit 5-7** Reserved

Byte 1 Transaction identification information:
- **Bit 0** System transaction
- **Bit 1** Mirror transaction
- **Bit 2** Distributed Program Link (DPL) mirror transaction
- **Bit 3** ONC RPC alias transaction
- **Bit 4** WEB alias transaction
- **Bit 5** 3270 bridge transaction
- **Bit 6** Reserved
- **Bit 7** CICS BTS run transaction (ACQPROCESS or activity) synchronous

Byte 2 z/OS workload manager request (transaction) completion information:
- **Bit 0** Report the total response time (begin-to-end phase) for the completed work request (transaction)

Bit 1 Notify that the entire execution phase of the work request (transaction) is complete

Bit 2 Notify that a subset of the execution phase of the work request (transaction) is complete

Bit 3 This transaction has been reported to the z/OS workload manager as completing abnormally because it has tried to access DB2 and a "connection unavailable" response has been returned. This abnormal completion occurs when all the following are true:

1. Bit 0 is set.
2. CICS is not connected to DB2.
3. The CICS-DB2 adapter is in standby mode (STANDBYMODE(RECONNECT) or STANDBYMODE(CONNECT)).
4. CONNECTERROR(SQLCODE) is specified, causing the application to receive a -923 SQL code.

Bits 4-7
Reserved

Byte 3 Transaction definition information:

Bit 0 Taskdataloc = BELOW
Bit 1 Taskdatakey = CICS
Bit 2 Isolate = NO
Bit 3 Dynamic = YES
Bit 4-7 Reserved

Byte 4 Transaction origin type:

X'01' None
X'02' Terminal
X'03' Transient data
X'04' Start
X'05' Terminal start
X'06' CICS Business Transaction Services (BTS) scheduler
X'07' Transaction Manager domain (XM) run transaction
X'08' 3270 bridge
X'09' Socket domain
X'0A' CICS Web support (CWS)
X'0B' Internet Inter-ORB Protocol (IIOP)
X'0C' Resource Recovery Services (RRS)
X'0D' LU 6.1 session
X'0E' LU 6.2 (APPC) session
X'0F' MRO session
X'10' External Call Interface (ECI) session
X'11' II domain Request Receiver
X'12' Request stream (RZ) Instore Transport
X'13' IPIC session
X'14' Event

Byte 5

Bit 0 The transaction origin
Bit 1 Reserved
Bit 2 Resource class record, or records, for this task
Bit 3 Identity class record, or records, for this task
Bit 4 Reserved
Bit 5 Reserved
Bit 6 Task purged on an open TCB
Bit 7 Task abnormally terminated

Note: If bit 6 is set, the task was purged while running on an open TCB, and its transaction timing clocks have been left in an unreliable state. Because of this, the clocks will be set to zero when the record is written by the CICS Monitoring Facility (CMF).

Byte 6 CICS TS V3.2 and later: Reserved.

CICS TS V3.1 and earlier:

JVM status information:
Bit 0 JVM marked unresettable
Bit 1-7 Reserved

Byte 7 Recovery manager status information:
Bit 0 Indoubt wait = no
Bit 1 Indoubt action = commit
Bit 2 Recovery manager - UOW resolved with indoubt action
Bit 3 Recovery manager - Shunt
Bit 4 Recovery manager - Unshunt
Bit 5 Recovery manager - Indoubt failure
Bit 6 Recovery manager - Resource owner failure
Bit 7 Reserved

Note: Bits 2 through 6 are reset on a SYNCPOINT request when the MNSYNC=YES option is specified.

166 (Type-C, TCLSNAME, 8 bytes)
The transaction's transaction class name (TRANCLASS). If the transaction was delayed because of the limits set for the transaction class, the elapsed time that the transaction waited can be found in the TCLDELAY field, (owner: DFHTASK, field ID: 126).

The transaction class name field is null if the transaction is not defined in a transaction class.

170 (Type-S, RMITIME, 12 bytes)
The total elapsed time the user task spent in the CICS Resource Manager Interface (RMI) for all the resource managers invoked by the user task, including DB2, IMS (DBCTL), WebSphere MQ, CICS Sockets, and so on.

For information on the related fields for DB2 and IMS (DBCTL), see “DFHDATA fields” on page 272.

For more information, see “RMI elapsed and suspend time” on page 320.

Refer also to “DFHRMI fields” on page 281 for information that can provide additional insight into understanding and interpreting CICS Resource Manager Interface (RMI) performance problems.

171 (Type-S, RMISUSP, 12 bytes)
The elapsed time during which the user task was suspended by the CICS dispatcher domain whilst in the CICS Resource Manager Interface (RMI).

For more information, see “RMI elapsed and suspend time” on page 320 and “Transaction timing fields” on page 313.

For information on the related fields for DB2 and IMS (DBCTL), see “DFHDATA fields” on page 272.

Note: This field is a component of the task suspend time field, SUSPTIME (owner: DFHTASK, field ID: 014).

181 (Type-S, WTEXWAIT, 12 bytes)
The elapsed time the user task waited for one or more ECBs, passed to CICS by the user task using the EXEC CICS WAIT EXTERNAL ECBLIST() command, to be MVS POSTed. The user task can wait on one or more ECBs. If it waits on more than one, the user task becomes dispatchable as soon as one of the ECBs is posted.

For more information, see "Transaction timing fields" on page 313.

Note: This field is a component of the task suspend time field, SUSPTIME (owner: DFHTASK, field ID: 014).

182 (Type-S, WTCEWAIT, 12 bytes)
The elapsed time the user task waited for:

- One or more ECBs, passed to CICS by the user task using the EXEC CICS WAITCICS ECBLIST command, to be MVS POSTed. The user task can wait on one or more ECBs. If it waits on more than one, the user task becomes dispatchable as soon as one of the ECBs is posted.
- Completion of an event initiated by the same or by another task. The event would normally be the posting, at the expiration time, of a timer-event control area provided in response to an EXEC CICS POST command. The EXEC CICS WAIT EVENT command provides a method of directly giving up control to some other task until the event being waited on is completed.

For more information, see "Transaction timing fields" on page 313.

Note: This field is a component of the task suspend time field, SUSPTIME (owner: DFHTASK, field ID: 014).

183 (Type-S, ICDELAY, 12 bytes)
The elapsed time that the user task waited as a result of issuing either:

- An interval control EXEC CICS DELAY command for a specified time interval, or
- An interval control EXEC CICS DELAY command for a specified time of day to expire, or
- An interval control EXEC CICS RETRIEVE command with the WAIT option specified.

For more information, see "Transaction timing fields" on page 313.

Note: This field is a component of the task suspend time field, SUSPTIME (owner: DFHTASK, field ID: 014).

184 (Type-S, GVUPWAIT, 12 bytes)
The elapsed time in which the user task waited as a result of giving up control to another task. A user task can give up control in many ways. Some examples are application programs that use one or more of the following EXEC CICS API or SPI commands:

- Using the EXEC CICS SUSPEND command. This command causes the issuing task to relinquish control to another task of higher or equal dispatching priority. Control is returned to this task as soon as no other task of a higher or equal priority is ready to be dispatched.
- Using the EXEC CICS CHANGE TASK PRIORITY command. This command immediately changes the priority of the issuing task and causes the task to give up control in order for it to be dispatched at its new priority. The task is not redispatched until tasks of higher or equal priority, and that are also dispatchable, have been dispatched.

- Using the EXEC CICS DELAY command with INTERVAL(0). This command causes the issuing task to relinquish control to another task of higher or equal dispatching priority. Control is returned to this task as soon as no other task of a higher or equal priority is ready to be dispatched.
- Using the EXEC CICS POST command requesting notification that a specified time has expired. This command causes the issuing task to relinquish control to give CICS the opportunity to post the time-event control area.
- Using the CICS CICS PERFORM RESETTIME command to synchronize the CICS date and time with the MVS system date and time of day.
- Using the EXEC CICS START TRANSID command with the ATTACH option.

For more information, see "Transaction timing fields" on page 313.

Note: This field is a component of the task suspend time field, SUSPTIME (owner: DFHTASK, field ID: 014).

190 (Type-C, RRMSURID, 16 bytes)
The RRMS/MVS Unit-of-Recovery Id (URID).

For more general information on the Recoverable Resource Management Services (RRMS), see the *CICS External Interfaces Guide.*

191 (Type-S, RRMSWAIT, 12 bytes)
The elapsed time in which the user task waited indoubt using the MVS resource recovery services (RRS) for transactional EXCI.

For more information, see "Transaction timing fields" on page 313.

Note: This field is a component of the task suspend time field, SUSPTIME (owner: DFHTASK, field ID: 014).

192 (Type-S, RQRWAIT, 12 bytes)
The elapsed time during which the request receiver user task CIRR (or user specified transaction ID) waited for any outstanding replies to be satisfied.

For more information, see "Transaction timing fields" on page 313.

Note: This field is a component of the task suspend time field, SUSPTIME (group name: DFHTASK, field ID: 014).

193 (Type-S, RQPWAIT, 12 bytes)
The elapsed time during which the request processor user task CIRP waited for any outstanding replies to be satisfied.

For more information, see "Transaction timing fields" on page 313.

Note: This field is a component of the task suspend time field, SUSPTIME (group name: DFHTASK, field ID: 014).

194 (Type-C, OTSTID, 128 bytes)
The OTS TID is the Object Transaction Service Transaction ID. It can be used to correlate all the transactions that are part of the same Object Transaction.

195 (Type-S, RUNTRWTT, 12 bytes)
The elapsed time in which the user task waited for completion of a transaction that run as a result of the user task issuing a CICS BTS run ACQPROCESS or run activity request to run a process or activity synchronously.

For more information, see “Correlating performance class data” on page 325 and “Transaction timing fields” on page 313.

Note: This field is a component of the task suspend time field, SUSPTIME (owner: DFHTASK, field ID: 014).

247 (Type-S, DSCHMDLY, 12 bytes)
The elapsed time in which the user task waited for redispatch after a CICS Dispatcher change-TCB mode request was issued by or on behalf of the user task. For example, a change-TCB mode request from a CICS L8 or S8 mode TCB back to the CICS QR mode TCB might have to wait for the QR TCB because another task is currently dispatched on the QR TCB. Ideally the number of CICS dispatcher change-TCB modes should be kept to a minimum. See the section on the “Open transaction environment” on page 322 for more additional information.

For more information, see “Transaction timing fields” on page 313.

Note: This field is a component of the task suspend time field, SUSPTIME (owner: DFHTASK, field ID: 014).

249 (Type-S, QRMODDLY, 12 bytes)
The elapsed time in which the user task waited for redispatch on the CICS QR mode TCB. This is an aggregate of the wait times between each wait event completion and the user task being redispatched by the CICS dispatcher domain on the QR mode TCB. See the section on the “Open transaction environment” on page 322 for additional information.

This field is a subset of the wait for redispatch field, DISPWTT (owner: DFHTASK, field ID: 102).

For more information, see “Transaction timing fields” on page 313.

Note: This field is a component of the task suspend time field, SUSPTIME (owner: DFHTASK, field ID: 014).

250 (Type-S, MAXOTDLY, 12 bytes)
The elapsed time in which the user task waited to obtain a CICS open mode TCB because the CICS system had reached the limit set by the system parameter, MAXOPENTCBS.

This applies to L8 mode open TCBs *only*. L8 mode open TCBs are used by task-related user exits that are enabled with the OPENAPI option. This includes the CICS DB2 adaptor when CICS connects to DB2 Version 6 or later. See the section on the “Open transaction environment” on page 322 for more general information.

For more information, see “Transaction timing fields” on page 313.

Note: This field is a component of the task suspend time field, SUSPTIME (owner: DFHTASK, field ID: 014).

251 (Type-A, TCBATTCT, 4 bytes)
The number of CICS dispatcher domain TCB attaches issued by or on behalf of the user task. See the section on the “Open transaction environment” on page 322 for additional information.

252 (Type-A, DSTCBHWM, 4 bytes)
The peak number of CICS open TCBs (in TCB modes J8, J9, L8, L9, S8, T8, X8, and X9) that have been concurrently allocated to the user task.

253 (Type-S, JVMTIME, 12 bytes)
The total elapsed time that the user task spent in the CICS Java Virtual Machine (JVM).

For more information, see "JVM elapsed and suspend time" on page 321.

254 (Type-S, JVMSUSP, 12 bytes)
The elapsed time during which the user task was suspended by the CICS dispatcher domain while running in the CICS Java Virtual Machine (JVM).

For more information, see "JVM elapsed and suspend time" on page 321 and "Transaction timing fields" on page 313.

Note: This field is a component of the task suspend time field, SUSPTIME (owner: DFHTASK, field ID: 014).

255 (Type-S, QRDISPT, 12 bytes)
The total elapsed time during which the user task was dispatched by the CICS dispatcher domain on the CICS QR mode TCB.

Note: This field is a component of the total task dispatch time field, USRDISPT (owner: DFHTASK, field ID: 007).

256 (Type-S, QRCPUT, 12 bytes)
The total processor (CPU) time during which the user task was dispatched by the CICS dispatcher domain on the CICS QR mode TCB.

Note: This field is a component of the total task CPU time field, USRCPUT (owner: DFHTASK, field ID: 008).

257 (Type-S, MSDISPT, 12 bytes)
The total elapsed time during which the user task was dispatched by the CICS dispatcher domain on each CICS TCB, mode RO, CO, FO, SZ, RP, SL, SO, SP, D2 and JM. Note that:

- Mode RO is used for opening and closing CICS data sets, loading programs, issuing RACF® calls, and so on.
- Mode CO is used for processes which can safely run in parallel with other CICS activity such as VSAM requests.
- Mode FO is used for opening and closing user data sets.
- Mode SZ is used only if FEPI is active.
- Mode RP is used only if ONC RPC support is active.
- Modes SL, SO and SP are used only if TCPIP=YES is specified as a system initialization parameter. Mode SL is used by the CICS support for TCP/IP (TCP/IP Service) Listener system transaction CSOL. Mode SO is used to process the CICS support for TCP/IP socket requests issued on by or on behalf of the user task. Mode SP is the CICS support for TCP/IP sockets IPT task (Initial Pthread TCB) and also owns all the SSL pthreads (S8 TCBs).
- Mode D2 is used to terminate DB2 protected threads. The CICS-DB2 attachment facility long running system task, CEX2, associates each protected thread in turn to the CICS D2 mode TCB so that after two protected thread purge cycles it can call DB2 to terminate the thread. The protected thread purge cycle is defined in the PURGECYCLE parameter on the DB2CONN resource definition. The CICS D2 mode TCB is also used should a user issue the DSNC DISCONNECT planname command to preempt the purge cycle and cause protected threads for a planname to be terminated immediately.

Note: Mode D2 is *only* used when CICS is connected to DB2 Version 6 or later.

- Mode JM is used for shared class cache management purposes.
- Mode EP is used for event processing.
- CICS creates a TP mode TCB for every JVMSERVER resource definition that is installed and enabled. The TP TCB owns the IPT task (Initial Process Thread TCB), the Language Environment® enclave, the JVM, the THRD TCB pool, and the T8 TCBs for that JVM server.

Note: This field is a component of the total task dispatch time field, USRDISPT (owner: DFHTASK, field ID: 007).

258 (Type-S, MSCPUT, 12 bytes)
The processor time for which the user task was dispatched on each CICS TCB. The usage of each CICS TCB is shown in the description for field MSDISPT (field ID: 257).

Note: This field is a component of the total task CPU time field, USRCPUT (owner: DFHTASK, field ID: 008).

259 (Type-S, L8CPUT, 12 bytes)
The processor (CPU) time during which the user task was dispatched by the CICS dispatcher domain on a CICS L8 mode TCB.

A transaction is allocated and uses a CICS L8 mode TCB when it invokes a task-related user exit program that has been enabled with the OPENAPI option. This includes the CICS DB2 adaptor when CICS connects to DB2 Version 6 or later. However, when a task has been allocated an L8 mode TCB, that same TCB will remain associated with the task until the transaction is detached.

For more information on the CICS open transaction environment (OTE), see the *CICS Application Programming Guide*

For more information on the DB2 accounting and monitoring, see the *CICS DB2 Guide.*

Note: This field is a component of the total task CPU time field, USRCPUT (owner: DFHTASK, field ID: 008) and the task key 8 CPU time field, KY8CPUT (owner: DFHTASK, field ID: 263). See the section on the "Open transaction environment" on page 322 for more information.

260 (Type-S, J8CPUT, 12 bytes)
The processor (CPU) time during which the user task was dispatched by the CICS dispatcher domain on a CICS J8 mode TCB. A transaction is allocated and use a CICS J8 mode TCB each time the transaction invokes a CICS Java Virtual Machine (JVM) application program. However, when a task has been allocated a J8 mode TCB, that same TCB will remain associated with the task until the transaction is detached.

Note: This field is a component of the total task CPU time field, USRCPUT (owner: DFHTASK, field ID: 008) and the task key 8 CPU time field, KY8CPUT (owner: DFHTASK, field ID: 263).

261 (Type-S, S8CPUT, 12 bytes)
The processor (CPU) time during which the user task was dispatched by the CICS dispatcher domain on a CICS S8 mode TCB. A transaction is allocated a CICS S8 mode TCB when it is using the secure sockets layer (SSL) during

client certification negotiation. The S8 mode TCB remains associated with the same task for the life of the SSL request.

Note: This field is a component of the total task CPU time field, USRCPUT (owner: DFHTASK, field ID: 008) and the task key 8 CPU time field, KY8CPUT (owner: DFHTASK, field ID: 263).

262 (Type-S, KY8DISPT, 12 bytes)
The total elapsed time during which the user task was dispatched by the CICS dispatcher domain on a CICS Key 8 mode TCB. A transaction is allocated and dispatched on a:

- CICS H8 mode TCB when it invokes an HPJ-compiled Java application program that has been defined to use Java hot-pooling.
- CICS J8 mode TCB each time the transaction invokes a Java application program that has been defined with JVM(YES). However, when a task has been allocated a J8 mode TCB, that same TCB will remain associated with the task until the transaction is detached. See the section on the "Open transaction environment" on page 322 for more information.
- CICS L8 mode TCB when it invokes a task-related user exit program that has with the OPENAPI option.

  This includes the CICS DB2 adaptor when CICS connects to DB2 Version 6 or later. However, when a task has been allocated an L8 mode TCB, that same TCB will remain associated with the task until the transaction is detached.

  For more general information on the CICS open transaction environment (OTE), see the *CICS Application Programming Guide.*
- CICS S8 mode TCB when it is using the secure sockets layer (SSL) during client certification negotiation. The S8 mode TCB will remain associated with the same task until the secure socket close which normally occurs during task detach processing.
- CICS T8 mode when it is using a JVM server to perform multithreaded processing. When a thread is allocated a T8 mode TCB, that same TCB remains associated with the thread until the processing completes.
- CICS X8 mode TCB when a transaction invokes a C or C++ application program compiled with the XPLINK option on, and that is defined with EXECKEY=CICS. The TCB remains associated with the task until the program ends.

Note: This field is a component of the total task dispatch time field, USRDISPT (owner: DFHTASK, field ID: 007).

263 (Type-S, KY8CPUT, 12 bytes)
The processor time during which the user task was dispatched by the CICS dispatcher on a CICS Key 8 mode TCB. The usage of the CICS Key 8 mode TCBs is shown in the description for field KY8DISPT (field ID: 262).

Note: This field is a component of the total task CPU time field, USRCPUT (owner: DFHTASK, field ID: 008).

264 (Type-S, KY9DISPT, 12 bytes)
The total elapsed time during which the user task was dispatched by the CICS dispatcher on a CICS Key 9 mode TCB. A transaction is allocated and dispatched on a:

- CICS J9 mode TCB when a transaction invokes a Java program defined with EXECKEY=USER, that requires a JVM in user key. (If the storage protection

facility is inactive, the transaction is allocated a J8 mode TCB instead of a J9 mode TCB.) The TCB remains associated with the task until the Java program completes.

- CICS L9 mode TCB when a transaction invokes an OPENAPI application program defined with EXECKEY=USER. The TCB remains associated with the task until the transaction is detached.
- CICS X9 mode TCB when a transaction invokes a C or C++ program that was compiled with the XPLINK option, and that is defined with EXECKEY=USER. The TCB remains associated with the task until the program ends.

Note: This field is a component of the task dispatch time field, USRDISPT (owner: DFHTASK, field ID: 007).

265 (Type-S, KY9CPUT, 12 bytes)
The total processor (CPU) time during which the user task was dispatched by the CICS dispatcher on a CICS Key 9 mode TCB. A transaction is allocated and dispatched on a:

- CICS J9 mode TCB when a transaction invokes a Java program defined with EXECKEY=USER, that requires a JVM in user key. (If the storage protection facility is inactive, the transaction is allocated a J8 mode TCB instead of a J9 mode TCB.) The TCB remains associated with the task until the Java program completes.
- CICS L9 mode TCB when a transaction invokes an OPENAPI application program defined with EXECKEY=USER. The TCB remains associated with the task until the transaction is detached.
- CICS X9 mode TCB when a transaction invokes a C or C++ program that was compiled with the XPLINK option, and that is defined with EXECKEY=USER. The TCB remains associated with the task until the program ends.

Note: This field is a component of the total task CPU time field, USRCPUT (owner: DFHTASK, field ID: 008).

266 (Type-S, L9CPUT, 12 bytes)
The processor time during which the user task was dispatched by the CICS dispatcher domain on a CICS L9 mode TCB. When a transaction invokes an OPENAPI application program defined with EXECKEY=USER, it is allocated and uses a CICS L9 mode TCB. (If the storage protection facility is inactive, an L8 mode TCB is used instead of an L9 mode TCB.) When a task has been allocated an L9 mode TCB, that same TCB remains associated with the task until the transaction is detached.

For more information on the CICS open transaction environment (OTE), see the *CICS Application Programming Guide.*

Note: This field is a component of the total task CPU time field, USRCPUT (owner: DFHTASK, field ID: 008).

267 (Type-S, J9CPUT, 12 bytes)
The processor time during which the user task was dispatched by the CICS dispatcher domain on a CICS J9 mode TCB. When a transaction invokes a Java program defined with EXECKEY=USER, that requires a JVM in user key, it is allocated and uses a CICS J9 mode TCB. (If the storage protection facility is inactive, a J8 mode TCB is used instead of a J9 mode TCB.) When a task has been allocated a J9 mode TCB, that same TCB remains associated with the task until the Java program completes.

268 (Type-S, DSTCBMWT, 12 bytes)
The elapsed time which the user task spent in TCB mismatch waits, that is, waiting because there was no TCB available matching the request, but there was at least one non-matching free TCB. For transactions that invoke a Java program to run in a JVM, this shows the time spent waiting for a TCB of the correct mode (J8 or J9) and JVM profile. See *Java Application Development for CICS: Base Services and CORBA Client Support* for more information about how CICS manages TCB mismatch waits for these transactions.

269 (Type-S, RODISPT, 12 bytes)
The total elapsed time during which the user task was dispatched by the CICS dispatcher on the CICS RO mode TCB. The CICS RO mode TCB is used for opening and closing CICS data sets, loading programs, issuing RACF calls, and so on.

Note: This field is a component of the total task dispatch time field, USRDISPT (owner: DFHTASK, field ID: 007) and the task miscellaneous TCB dispatch time field MSDISPT (owner: DFHTASK, field ID: 257).

270 (Type-S, ROCPUT, 12 bytes)
The total processor (CPU) time during which the user task was dispatched by the CICS dispatcher on the CICS RO mode TCB. The CICS RO mode TCB is used for opening and closing CICS data sets, loading programs, issuing RACF calls, and so on.

Note: This field is a component of the total task CPU time field USRCPUT (owner: DFHTASK, field ID: 008) and the task miscellaneous TCB CPU time field MSCPUT (owner: DFHTASK, field ID: 258).

271 (Type-S, X8CPUT, 12 bytes)
The processor (CPU) time during which the user task was dispatched by the CICS dispatcher domain on a CICS X8 mode TCB. A transaction is allocated and use a CICS X8 mode TCB each time the transaction invokes a C or C++ application program that has been compiled with the XPLINK flag turned on and that is defined with EXECKEY=CICS. (An X8 mode TCB can also be allocated if the program is defined with EXECKEY=USER, but the storage protection facility is inactive.) When a task has been allocated an X8 mode TCB, that same TCB remains associated with the task until the program completes.

Note: This field is a component of the total task CPU time field USRCPUT (owner: DFHTASK, field ID: 008) and the task key 8 CPU time field KY8CPUT (owner: DFHTASK, field ID: 263).

272 (Type-S, X9CPUT, 12 bytes)
The processor (CPU) time during which the user task was dispatched by the CICS dispatcher domain on a CICS X9 mode TCB. A transaction is allocated and use a CICS X9 mode TCB each time the transaction invokes a C or C++ application program that has been compiled with the XPLINK flag turned on, and that is defined with EXECKEY=USER, it is allocated and uses a CICS X9 mode TCB. (If the storage protection facility is inactive, an X8 mode TCB is used instead of an X9 mode TCB.) When a task has been allocated an X9 mode TCB, that same TCB remains associated with the task until the program completes.

Note: This field is a component of the total task CPU time field USRCPUT (owner: DFHTASK, field ID: 008) and the task key 9 CPU time field KY9CPUT (owner: DFHTASK, field ID: 265).

273 (Type-S, JVMITIME, 12 bytes)
The elapsed time the user task spent initializing the CICS Java Virtual Machine (JVM) environment.

For more information, see "JVM elapsed and suspend time" on page 321.

Note: This field is a component of the task JVM elapsed time field JVMTIME (owner: DFHTASK, field ID: 253).

275 (Type-S, JVMRTIME, 12 bytes)
The elapsed time the user task spent resetting or destroying the CICS Java Virtual Machine (JVM) environment. If the reset fails, the JVM is marked un-resettable and the JVM is terminated.

For more information, see "JVM elapsed and suspend time" on page 321.

Note: This field is a component of the task JVM elapsed time field JVMTIME (owner: DFHTASK, field ID: 253).

277 (Type-S, MAXJTDLY, 12 bytes)
The elapsed time in which the user task waited to obtain a CICS JVM TCB (J8 or J9 mode), because the CICS system had reached the limit set by the system parameter, MAXJVMTCBS. The J8 and J9 mode open TCBs are used exclusively by Java programs defined with JVM(YES).

For more information, see "Transaction timing fields" on page 313.

Note: This field is a component of the task suspend time (field: SUSPTIME, owner: DFHTASK, field ID: 014).

278 (Type-S, MAXHTDLY, 12 bytes)
The elapsed time in which the user task waited to obtain a CICS Hot-Pooling TCB (H8 mode), because the CICS system had reached the limit set by the system parameter, MAXHPTCBS. The H8 mode open TCBs are used exclusively by HPJ-compiled Java programs defined with HOTPOOL(YES). This field is not available in CICS Transaction Server for z/OS Version 3.1 or later.

For more information, see "Transaction timing fields" on page 313.

Note: This field is a component of the task suspend time (field: SUSPTIME, owner: DFHTASK, field ID: 014).

279 (Type-S, DSMMSCWT, 12 bytes)
The elapsed time which the user task spent waiting because no TCB was available, and none could be created because of MVS storage constraints.

Note: This field is a component of the task suspend time (field: SUSPTIME, owner: DFHTASK, field ID: 014).

281 (Type-S, MAXSTDLY, 12 bytes)
The elapsed time in which the user task waited to obtain a CICS SSL TCB (S8 mode), because the CICS system had reached the limit set by the system parameter, MAXSSLTCBS. The S8 mode open TCBs are used exclusively by secure sockets layer (SSL) pthread requests issued by or on behalf of a user task. For more information, see "Transaction timing fields" on page 313.

Note: This field is a component of the task suspend time (field: SUSPTIME, owner: DFHTASK, field ID: 014).

282 (Type-S, MAXXTDLY, 12 bytes)
The elapsed time in which the user task waited to obtain a CICS XPLink TCB (X8 or X9 mode), because the CICS system had reached the limit set by the system parameter, MAXXPTCBS. The X8 and X9 mode open TCBs are used exclusively by C or C++ programs compiled with the XPLINK flag turned on. For more information, see "Transaction timing fields" on page 313.

Note: This field is a component of the task suspend time (field: SUSPTIME, owner: DFHTASK, field ID: 014).

283 (Type-S, MAXTTDLY, 12 bytes)
The elapsed time in which the user task waited to obtain a T8 TCB, because the CICS system reached the limit of available threads. The T8 mode open TCBs are used by a JVM server to perform multithreaded processing. Each T8 TCB runs under one thread. The thread limit is 1024 for each CICS region and each JVM server in a CICS region can have up to 256 threads.

285 (Type-S, PTPWAIT, 12 bytes)
The elapsed time in which the user task waited for the 3270 bridge partner transaction to complete. For more information on the CICS 3270 Bridge, see the *CICS External Interfaces Guide.*

For more information, see "Transaction timing fields" on page 313.

Note: This field is a component of the task suspend time (field: SUSPTIME, owner: DFHTASK, field ID: 014).

345 (Type-A, ICSTACDL, 4 bytes)
The total length, in bytes, of the data in the containers of all the locally-run interval control START requests, with the CHANNEL option, issued by the user task. This total includes the length of any headers to the data.

346 (Type-A, ICSTRCCT, 4 bytes)
The number of interval control START requests, with the CHANNEL option, to be run on remote systems issued by the user task.

347 (Type-A, ICSTRCDL, 4 bytes)
The total length, in bytes, of the data in the containers of all the remotely-run interval control START requests, with the CHANNEL option, issued by the user task. This total includes the length of any headers to the data.

400 (Type-S, T8CPUT, 12 bytes)
The processor time during which the user task was dispatched by the CICS dispatcher domain on a CICS T8 mode TCB. T8 mode TCBs are used by a JVM server to perform multithreaded processing. When a thread is allocated a T8 mode TCB, that same TCB remains associated with the thread until the processing completes.

Note: This field is a component of the total task CPU time field, USRCPUT (field ID 008 in group DFHTASK), and the task key 8 CPU time field, KY8CPUT (field ID 263 in group DFHTASK).

401 (Type-S, JVMTHDWT, 12 bytes)
The elapsed time that the user task waited to obtain a JVM server thread because the CICS system had reached the thread limit for a JVM server in the CICS region.

Note: This field is a component of the task suspend time field, SUSPTIME (group name: DFHTASK, field ID: 014).

DFHTEMP fields

For a breakdown by individual temporary storage queue of some of the DFHTEMP information, you can request transaction resource monitoring. See "Temporary storage queue entry fields" on page 339 for details.

DFHTEMP owns the following performance class data fields:

011 (Type-S, TSIOWTT, 8 bytes)
The elapsed time in which the user task waited for VSAM I/O to the auxiliary temporary storage data set, DFHTEMP.

For more information, see "Transaction timing fields" on page 313.

Note: This field is a component of the task suspend time (field: SUSPTIME, owner: DFHTASK, field ID: 014).

044 (Type-A, TSGETCT, 4 bytes)
The number of temporary storage READQ requests issued by the user task.

046 (Type-A, TSPUTACT, 4 bytes)
The number of temporary storage WRITEQ AUX requests issued by the user task.

047 (Type-A, TSPUTMCT, 4 bytes)
The number of temporary storage WRITEQ MAIN requests issued by the user task.

092 (Type-A, TSTOTCT, 4 bytes)
The total number of temporary storage DELETEQ, READQ, WRITEQ AUX and WRITEQ MAIN requests issued by the user task.

Note: The number of temporary storage DELETEQ requests can be calculated by subtracting the temporary storage request counts TSGETCT, TSPUTACT, and TSPUTMCT from the total temporary storage request count, TSTOTCT.

178 (Type-S, TSSHWAIT, 8 bytes)
The elapsed time in which the user task waited for an asynchronous shared temporary storage request to a temporary storage data server to complete.

For more information, see "Transaction timing fields" on page 313.

See the *CICS System Definition Guide* for more information on the CICS data servers.

Note: This field is a component of the task suspend time (field: SUSPTIME, owner: DFHTASK, field ID: 014).

DFHTERM fields

DFHTERM owns the following performance class data fields:

002 (Type-C, TERM, 4 bytes)
Terminal or session identification. This field is null if the task is not associated with a terminal or session.

See the terminal information field, TERMINFO (owner: DFHTERM, field ID: 165) for details on the type of terminal or session.

009 (Type-S, TCIOWTT, 8 bytes)
The elapsed time in which the user task waited for input from the terminal user, after issuing an EXEC CICS RECEIVE request.

For more information, see “Transaction timing fields” on page 313.

Note: This field is a component of the task suspend time field, SUSPTIME (owner: DFHTASK, field ID: 014).

034 (Type-A, TCMSGIN1, 4 bytes)
The number of messages received from the task's principal terminal facility, including LUTYPE6.1 and LUTYPE6.2 (APPC) but not MRO (Inter-Region Communication).

035 (Type-A, TCMSGOU1, 4 bytes)
The number of messages sent to the task's principal terminal facility, including LUTYPE6.1 and LUTYPE6.2 (APPC) but not MRO (Inter-Region Communication).

067 (Type-A, TCMSGIN2, 4 bytes)
The number of messages received from the LUTYPE6.1 alternate terminal facilities allocated by the user task.

068 (Type-A, TCMSGOU2, 4 bytes)
The number of messages sent to the LUTYPE6.1 alternate terminal facilities allocated by the user task.

069 (Type-A, TCALLOCT, 4 bytes)
The number of session ALLOCATE requests issued by the user task for MRO (Inter-Region Communication), LUTYPE6.1, LUTYPE6.2 (APPC) sessions.

083 (Type-A, TCCHRIN1, 4 bytes)
The number of characters received from the task's principal terminal facility, including LUTYPE6.1 and LUTYPE6.2 (APPC) but not MRO (Inter-Region Communication).

084 (Type-A, TCCHROU1, 4 bytes)
The number of characters sent to the task's principal terminal facility, including LUTYPE6.1 and LUTYPE6.2 (APPC) but not MRO (Inter-Region Communication).

085 (Type-A, TCCHRIN2, 4 bytes)
The number of characters received from the LUTYPE6.1 alternate terminal facilities allocated by the user task.

086 (Type-A, TCCHROU2, 4 bytes)
The number of characters sent to the LUTYPE6.1 alternate terminal facilities allocated by the user task.

100 (Type-S, IRIOWTT, 8 bytes)
The elapsed time in which the user task waited for control to return at this end of an MRO (Inter-Region Communication) connection.

For more information, see “Transaction timing fields” on page 313.

Note: This field is a component of the task suspend time field, SUSPTIME (owner: DFHTASK, field ID: 014).

111 (Type-C, LUNAME, 8 bytes)
The LUNAME field is either the VTAM netname (LUname) of the terminal ID (if the Access Method for the terminal is VTAM) or the VTAM generic APPLID of the connection for the session ID (for an EXCI connection this field is blank). The transaction's terminal or session type can be identified from the Nature (byte 0) field within the terminal information TERMINFO field (owner: DFHTERM, field ID: 165). This field is null if the transaction was not associated with a terminal or session facility.

133 (Type-S, LU61WTT, 8 bytes)
The elapsed time in which the user task waited for I/O on a LUTYPE6.1 connection or session. This time includes the waits for conversations across LUTYPE6.1 connections, but not the waits incurred due to LUTYPE6.1 syncpoint flows.

For more information, see "Transaction timing fields" on page 313.

Note: This field is a component of the task suspend time field, SUSPTIME (owner: DFHTASK, field ID: 014).

134 (Type-S, LU62WTT, 8 bytes)
The elapsed time in which the user task waited for I/O on a LUTYPE6.2 connection or session. This time includes the waits for conversations across LUTYPE6.2 (APPC) connections, but not the waits incurred due to LUTYPE6.2 (APPC) syncpoint flows.

For more information, see "Transaction timing fields" on page 313.

Note: This field is a component of the task suspend time field, SUSPTIME (owner: DFHTASK, field ID: 014).

135 (Type-A, TCM62IN2, 4 bytes)
The number of messages received from the alternate facility allocated by the user task for LUTYPE6.2 (APPC) sessions.

136 (Type-A, TCM62OU2, 4 bytes)
The number of messages sent to the alternate facility allocated by the user task for LUTYPE6.2 (APPC) sessions.

137 (Type-A, TCC62IN2, 4 bytes)
The number of characters received from the alternate facility allocated by the user task for LUTYPE6.2 (APPC) sessions.

138 (Type-A, TCC62OU2, 4 bytes)
The number of characters sent to the alternate facility allocated by the user task for LUTYPE6.2 (APPC) sessions.

165 (Type-A, TERMINFO, 4 bytes)
Terminal or session information for this task's principal facility as identified in the TERM field (owner: DFHTERM, field ID: 002). This field is null if the task is not associated with a terminal or session facility.

Byte 0 Identifies whether this task is associated with a terminal or session. This field can be set to one of the following values:
X'00' None
X'01' Terminal
X'02' Session

Byte 1 If the principal facility for this task is a session (Byte 0 = X'02'), this field IDentifies the session type. This field can be set to one of the following values:
X'00' None
X'01' IRC
X'02' IRC XM
X'03' IRC XCF
X'04' LU61
X'05' LU62 Single
X'06' LU62 Parallel

Byte 2 Identifies the access method defined for the terminal ID or session ID in the TERM field. This field can be set to one of the following values:

X'00' None
X'01' VTAM
X'02' BTAM
X'03' BSAM
X'04' TCAM
X'05' TCAMSNA
X'06' BGAM
X'07' CONSOLE

Byte 3 Identifies the terminal or session type for the terminal ID or session ID in the TERM field. See the RDO Typeterm definition in the *CICS Resource Definition Guide* for more information on the values in this field.

The following table shows the contents and relationships of the terminal information field, TERMINFO (owner: DFHTERM, field ID: 165) with the transaction facility name field, FCTYNAME (owner: DFHTASK, field ID: 163), the terminal ID field, TERM (owner: DFHTERM, field ID: 002), the LUname field, LUNAME (owner: DFHTERM, field ID: 111), and the terminal session connection name field, TERMCNNM (owner: DFHTERM, field ID: 169).

Table 27. Terminal information cross-reference

TRANFLAG (byte 0)	TERMINFO (byte 0)	TERMINFO (byte 1)	TERMINFO (byte 2)	FCTYNAME	TERM	LUNAME	TERMCNNM
None X'80'	N/A	N/A	N/A	N/A	N/A	N/A	N/A
Terminal X'40'	Terminal X'01'	N/A	Access Method	Terminal ID	Terminal ID	LUname of the terminal if VTAM	N/A
Terminal X'40'	Session X'02'	Session type	Access Method	Session ID	Session ID	MRO - APPLID of the connection LU61 - APPLID of the connection LU62 - APPLID of the connection EXCI - Blank	IRC/ISC system entry name
Surrogate X'20'	Session X'02'	Session type	Access Method	Session ID	Session ID	MRO - APPLID of the connection LU61 - APPLID of the connection LU62 - APPLID of the connection EXCI - Blank	IRC/ISC system entry name
Destination X'10'	None X'00'	N/A	N/A	Destination ID	N/A	N/A	N/A
Bridge X'48'	Terminal X'01'	N/A	Access Method (VTAM)	Bridge Terminal ID	Bridge Terminal ID	Bridge Terminal ID	N/A

Note: byte 0 of the transaction flags field, TRANFLAG (owner: DFHTASK, field ID: 164) can be used to initially identify whether the transaction has a facility and what type of facility it is (such as terminal or transient data destination).

169 (Type-C, TERMCNNM, 4 bytes)
Terminal session connection name. If the terminal facility associated with this transaction is a session, this field is the name of the owning connection (sysid).

A terminal facility can be identified as a session using byte 0 of the terminal information field, (owner: DFHTERM, field ID: 165). If the value of the terminal information field is X'02' the terminal facility is a session.

197 (Type-C, NETID, 8 bytes)
The network ID field, NETID, is the network ID portion of the Network Qualified Name (NQNAME) received from VTAM during bind or logon for CICS terminal resources using any VTAM LUALIAS (defined or dynamic). If the resource has not logged on or an NQNAME was not received then this field is set to null.

198 (Type-C, RLUNAME, 8 bytes)
The Real LUname field, RLUNAME, is the VTAM netname (LUname) of the terminal ID for CICS terminal resources using any VTAM LUALIAS (defined or dynamic). If the resource has not logged on or an NQNAME was not received, then this field is set to null. Also, see the field, LUNAME (owner: DFHTERM, field ID: 111).

DFHWEBB fields

DFHWEBB owns the following performance class data fields. See the related performance data for "DFHDOCH fields" on page 274 and "DFHSOCK fields" on page 282.

For more information, see "CICS Web support" on page 327 and the *CICS Internet Guide.*

224 (Type-A, WBREADCT, 4 bytes)
The number of CICS Web support READ HTTPHEADER, READ FORMFIELD, and READ QUERYPARM requests issued by the user task when CICS is an HTTP server.

225 (Type-A, WBWRITCT, 4 bytes)
The number of CICS (as an HTTP server) Web support WRITE HTTPHEADER and FORMFIELD requests issued by the user task when CICS is an HTTP server.

231 (Type-A, WBRCVCT, 4 bytes)
The number of CICS Web support RECEIVE requests issued by the user task when CICS is an HTTP server.

232 (Type-A, WBCHRIN, 4 bytes)
The number of characters received by the CICS Web support RECEIVE requests issued by the user task when CICS is an HTTP server.

233 (Type-A, WBSENDCT, 4 bytes)
The number of CICS Web support SEND requests issued by the user task when CICS is an HTTP server.

234 (Type-A, WBCHROUT, 4 bytes)
The number of characters sent by the CICS Web support SEND requests issued by the user task when CICS is an HTTP server.

235 (Type-A, WBTOTCT, 4 bytes)
The total number of CICS Web support requests issued by the user task.

How the EXEC CICS WEB API commands correspond to the CICS Web monitoring fields is shown in Table 28 on page 310.

Table 28. EXEC CICS WEB commands related to the CWS monitoring fields

EXEC CICS WEB command	Monitoring fields
CLOSE	WBTOTCT
CONVERSE	WBSNDOU1, WBRCVIN1, and WBTOTCT
ENDBROWSE	WBBRWCT and WBTOTCT
EXTRACT	WBEXTRCT and WBTOTCT
OPEN	WBTOTCT
PARSE URL	WBPARSCT and WBTOTCT
READ	WBREADCT and WBTOTCT
READNEXT	WBBRWCT and WBTOTCT
RECEIVE	WBRCVCT and WBTOTCT
RETRIEVE	WBTOTCT
SEND	WBSENDCT and WBTOTCT
STARTBROWSE	WBBRWCT and WBTOTCT
WRITE	WBWRITCT and WBTOTCT

Note:

1. For CICS Transaction Server for OS/390, Version 1 Release 3, the number of "other" CICS Web support requests can be calculated by subtracting the CICS Web support requests WBBRWCT, WBEXTRCT, WBRCVCT and WBSENDCT from the total CICS Web support request count, WBTOTCT. This calculated "other" request count will include the CICS Web support requests such as START, BROWSE, READNEXT, HTTPHEADER/FORMFIELD, ENDBROWSE, EXTRACT, READ FORMFIELD, READ HTTPHEADER, RETRIEVE, WRITE HTTPHEADER, and so on.
2. When requests are made using the CICS WEB CONVERSE command, this will increment both the CICS as an HTTP client send and receive request counts (WBSNDOU1 and WBRCVIN1) and the characters sent and received (WBCHRIN1 and WBCHROU1).

Note:

236 (Type-A, WBREPRCT, 4 bytes)
The number of reads from the repository in temporary storage issued by the user task.

Note: These repository requests will also be included in the temporary storage request counts as defined in "DFHTEMP fields" on page 305.

237 (Type-A, WBREPWCT, 4 bytes)
The number of writes to the repository in temporary storage issued by the user task.

Note: These repository requests will also be included in the temporary storage request counts as defined in "DFHTEMP fields" on page 305.

238 (Type-A, WBEXTRCT, 4 bytes)
The number of CICS Web support EXTRACT requests issued by the user task. Also, see the field, SOEXTRCT (owner: DFHSOCK, field ID: 289).

239 (Type-A, WBBRWCT, 4 bytes)
The number of CICS Web browsing requests for HTTPHEADER, FORMFIELD, and QUERYPARM (STARTBROWSE, READNEXT, and ENDBROWSE) issued by the user task.

331 (Type-A, WBREDOCT, 4 bytes)
The number of CICS Web support READ HTTPHEADER requests issued by the user task when CICS is an HTTP client.

332 (Type-A, WBWRTOCT, 4 bytes)
The number of CICS Web support WRITE HTTPHEADER requests issued by the user task when CICS is an HTTP client.

333 (Type-A, WBRCVIN1, 4 bytes)
The number of CICS Web support RECEIVE and CONVERSE requests issued by the user task when CICS is an HTTP client.

334 (Type-A, WBCHRIN1, 4 bytes)
The number of characters received by the CICS Web support RECEIVE and CONVERSE requests issued by the user task when CICS is an HTTP client.

335 (Type-A, WBSNDOU1, 4 bytes)
The number of CICS Web support SEND and CONVERSE requests issued by the user task when CICS is an HTTP client.

336 (Type-A, WBCHROU1, 4 bytes)
The number of characters sent by the CICS Web support SEND and CONVERSE requests issued by the user task when CICS is an HTTP client.

337 (Type-A, WBPARSCT, 4 bytes)
The number of CICS Web support PARSE URL requests issued by the user task when CICS is an HTTP client.

338 (Type-A, WBBRWOCT, 4 bytes)
The number of CICS Web support BROWSE HTTPHEADER requests (STARTBROWSE, READNEXT, and ENDBROWSE) issued by the user task when CICS is an HTTP client.

340 (Type-A, WBIWBSCT, 4 bytes)
The number of EXEC CICS INVOKE SERVICE and EXEC CICS INVOKE WEBSERVICE requests issued by the user task.

341 (Type-A, WBREPRDL, 4 bytes)
The total length, in bytes, of the data read from the repository in temporary storage by the user task.

342 (Type-A, WBREPWDL, 4 bytes)
The total length, in bytes, of the data written to the repository in temporary storage by the user task.

380 (Type-C, WBURIMNM, 8 bytes)
For CICS Web support, Atom feeds, and Web service applications, the name of the URIMAP resource definition that was mapped to the URI of the inbound request that was processed by this task.

381 (Type-C, WBPIPLNM, 8 bytes)
For Web service applications, the name of the PIPELINE resource definition that was used to provide information about the message handlers that act on the service request processed by this task.

382 (Type-C, WBATMSNM, 8 bytes)
For Atom feeds, the name of the ATOMSERVICE resource definition that was used to process this task.

383 (Type-C, WBSVCENM, 32 bytes)
For Web service applications, the name of the WEBSERVICE resource definition that was used to process this task.

384 (Type-C, WBSVOPNM, 64 bytes)
For Web service applications, the first 64 bytes of the Web service operation name.

385 (Type-C, WBPROGNM, 8 bytes)
For CICS Web support, the name of the program from the URIMAP resource definition that was used to provide the application-generated response to the HTTP request processed by this task.

386 (Type-A, WBSFCRCT, 4 bytes)
The number of EXEC CICS SOAPFAULT CREATE commands issued by the user task.

387 (Type-A, WBSFTOCT, 4 bytes)
The total number of EXEC CICS SOAPFAULT ADD, CREATE, and DELETE commands issued by the user task.

388 (Type-A, WBISSFCT, 4 bytes)
The total number of SOAP faults received in response to the EXEC CICS INVOKE SERVICE and EXEC CICS INVOKE WEBSERVICE commands issued by the user task.

390 (Type-A, WBSREQBL, 4 bytes)
For Web service applications, the SOAP request body length.

392 (Type-A, WBSRSPBL, 4 bytes)
For Web service applications, the SOAP response body length.

411 (Type-S, MLXSSCTM, 12 bytes)
The CPU time taken to convert a document using the z/OS XML System Services parser. This field is a subset of the total CPU time as measured in the USRCPUT field (owner DFHTASK, field ID 008).

412 (Type-A, MLXSSTDL, 4 bytes)
The total length of the documents that were parsed using the z/OS XML System Services parser.

413 (Type-A, MLXMLTCT, 4 bytes)
The number of EXEC CICS TRANSFORM commands issued by the user task.

420 (Type-A, WSACBLCT, 4 bytes)
The number of EXEC CICS WSACONTEXT BUILD commands issued by the user task.

421 (Type-A, WSACGTCT, 4 bytes)
The number of EXEC CICS WSACONTEXT GET commands issued by the user task.

422 (Type-A, WSAEPCCT, 4 bytes)
The number of EXEC CICS WSAEPR CREATE commands issued by the user task.

423 (Type-A, WSATOTCT, 4 bytes)
The total number of EXEC CICS WS-Addressing commands issued by the user task.

Interpreting performance class data

A user task can be represented by one or more performance class monitoring records depending on whether the monitoring system initialization parameters MNCONV, MNSYNC, or MNFREQ are selected and whether an application program invokes a user event monitoring point (EMP) with the DELIVER option specified. In the descriptions that follow, the term *user task* means *that part or whole of a transaction that is represented by a performance class record* unless the description states otherwise.

Clocks and time stamps

In CICS PA, the term *clock* is distinguished from the term *time stamp:*

Clock A 32-bit value, expressed in units of 16 microseconds, accumulated during one or more measurement periods. The 32-bit value is followed by 8 reserved bits, which are in turn followed by a 24-bit value indicating the number of measurements periods.

Neither the 32-bit timer component of the clock nor its 24-bit period count are protected against wraparound. The timer capacity is about 18 hours, and the period count runs to modulo-16 777 216.

The eight reserved bits have the following significance:

Bits 0, 1, 2, and 3
Used for online control of the clock when it is running, and should always be zero on output.

Bits 4 and 7
Not used.

Bits 5 and 6
Used to indicate, when set to 1, that the clock has suffered at least one out-of-phase start (bit 5) or stop (bit 6).

Time Stamp
An 8-byte copy of the output of a STCK instruction.

Transaction timing fields

The CMF performance class record provides detailed timing information for each transaction as it is processed by CICS. A transaction can be represented by one or more performance class records depending on the monitoring options selected. The key transaction timing fields are:

Transaction response time
Calculated by subtracting the transaction Start time from the transaction Stop time. The transaction Start time and Stop time represent the start and end of a transaction measurement interval. This is normally the period between transaction attach and transaction detach but the performance class record could represent a part of a transaction depending on the monitoring options selected. See “Transaction response time” on page 315 for more information.

Transaction dispatch time
The elapsed time that the transaction was dispatched by the CICS dispatcher domain. See “Transaction dispatch time” on page 315 for more information.

Transaction CPU time
The amount of processor (CPU) time used during the execution of the task while it is dispatched. See “Transaction CPU time” on page 315 for more information.

Transaction suspend (wait) time
The total elapsed time that the transaction was suspended by the CICS dispatcher domain. This includes all task suspend (wait) time including:

- The wait time for first dispatch (First Dispatch Delay). This is then further broken down into:
  - First Dispatch Delay due to TRANCLASS limits.
  - First Dispatch Delay due to MXT limits.
- The wait time for redispatch (Dispatch Wait). This is the time the transaction was still suspended but awaiting dispatch (wait for redispatch) by the CICS dispatcher domain.
- The total I/O wait and other wait times.

See "Transaction suspend (wait) time" on page 315 for more information.

For detailed information on all the fields relating to the CICS dispatcher domain including the CICS open transaction environment (OTE), see "DFHTASK fields" on page 287.

The CMF performance class data also provides several other important transaction timing measurements. They include:

Exception wait time
The accumulated time from all the exception conditions measured by the CMF exception class records for the transaction. See "CMF exception class data fields" on page 328 for more information on the CMF exception class records.

Program load time
The total program fetch time (dispatch time, CPU time and DFHRPL I/O wait time) for all programs invoked by the transaction that have to be loaded into CICS program storage from the DFHRPL program library. See "Program load time" on page 319 for more information.

Syncpoint elapsed time
The total elapsed time that the transaction spent processing a syncpoint. See "Syncpoint elapsed time" on page 319 for more information. The OTS indoubt wait time is the total elapsed time the transaction spent indoubt whilst processing an Object Transaction Service (OTS) syncpoint.

RMI elapsed time
The total elapsed time the transaction spent in all Resource Managers (such as DB2, IMS DBCTL, WebSphere MQ) invoked by the transaction using the CICS Resource Manager Interface (RMI). See "RMI elapsed and suspend time" on page 320 for more information.

JVM elapsed time
The total elapsed time the transaction spent in the Java Virtual Machine (JVM) for all the CICS Java application programs invoked by the transaction. See "JVM elapsed and suspend time" on page 321 for more information.

JVM initialization time
The elapsed time the transaction spent initializing the Java Virtual Machine (JVM) for all the CICS Java application programs invoked by the transaction. See "JVM elapsed and suspend time" on page 321 for more information.

JVM reset time
The elapsed time the transaction spent resetting the Java Virtual Machine (JVM) for all the CICS Java application programs invoked by the transaction. See "JVM elapsed and suspend time" on page 321 for more information.

Transaction response time

The transaction response time can be calculated by subtracting the transaction start time field (owner: DFHCICS, field ID: 005) from the transaction stop time field (owner: DFHCICS, field ID: 006).

Figure 112 shows an overall view of the relationship of the transaction response time with the transaction's dispatch time, CPU time, and suspend (wait) time.

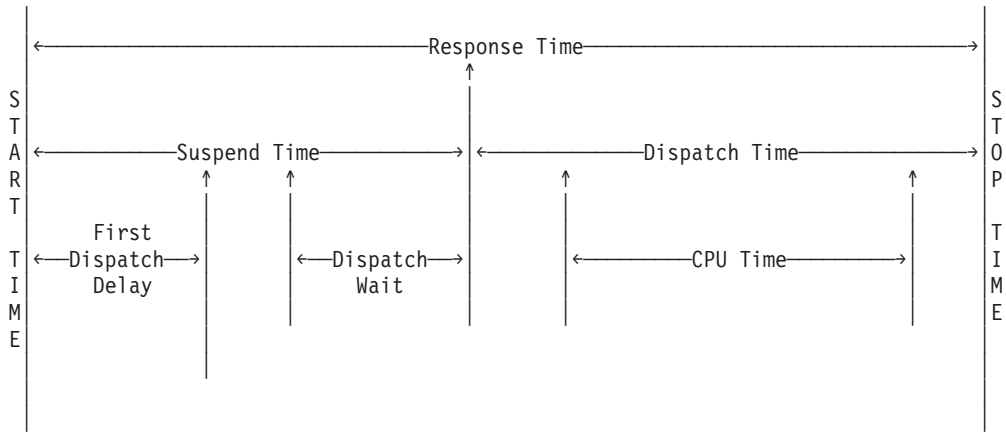

Figure 112. Transaction response time relationships

Transaction dispatch time

The Transaction Total Dispatch time field (owner: DFHTASK, field ID: 007) is the total elapsed time during which the user task was dispatched by the CICS dispatcher domain on each CICS TCB under which the task run. This can include any of the CICS dispatcher domain TCB modes QR, RO, CO, FO, SZ, RP, SL, SO, SP, EP, TP, D2, H8, J8, L8, L9, S8, X8, X9, and T8.

Transaction CPU time

The transaction total CPU time field (owner: DFHTASK, field ID: 008) is the total processor time during which the user task was dispatched by the CICS dispatcher domain on each CICS TCB under which the task run. This can include any of the CICS dispatcher domain TCB modes QR, RO, CO, FO, SZ, RP, SL, SO, SP, EP, TP, D2, H8, J8, L8, L9, S8, X8, X9, and T8.

Transaction suspend (wait) time

The transaction suspend (wait) time field (owner: DFHTASK, field ID: 014) is the total elapsed suspend (wait) time for which the user task was suspended by the CICS dispatcher domain. This includes:

- The task suspend (wait) time.
- The elapsed time the transaction waited for its first dispatch by the CICS dispatcher domain. This also includes any delay incurred because of the limits set for this transaction's transaction class (if any) or by the system parameter MXT being reached by this transaction.
- The elapsed time waiting for redispatch after a suspended task has been resumed.

Table 29 on page 316 identifies all the individual or specific suspend (wait) fields that are collected in the performance class data. All the suspend (wait) time fields listed are included in the total transaction suspend time field (owner: DFHTASK,

field ID: 014). Each of the individual suspend (wait) time fields also contains a portion of the transaction's dispatch wait (wait for redispatch) time field (owner: DFHTASK, field ID: 102).

Table 29. Performance class suspend (wait) time fields

Field ID	Owner	Field description
009	DFHTERM	Terminal Control I/O wait time
010	DFHJOUR	Journal Control I/O wait time
011	DFHTEMP	Temporary Storage I/O wait time
063	DFHFILE	File Control I/O wait time
100	DFHTERM	Inter-Region (MRO) I/O wait time
101	DFHDEST	Transient Data I/O wait time
123	DFHTASK	Global ENQ delay time
128	DFHTASK	Lock Manager (LM) delay time
129	DFHTASK	Local ENQ delay time
133	DFHTERM	LU 6.1 I/O wait time
134	DFHTERM	LU 6.2 I/O wait time
156	DFHFEPI	FEPI I/O wait time
171	DFHTASK	RMI suspend time
174	DFHFILE	RLS File I/O wait time
176	DFHFILE	Coupling facility data table server I/O wait time
177	DFHSYNC	Coupling facility data table server syncpoint and resynchronization wait time
178	DFHTEMP	Shared Temporary Storage I/O wait time
181	DFHTASK	EXEC CICS WAIT EXTERNAL wait time
182	DFHTASK	EXEC CICS WAITCICS and EXEC CICS WAIT EVENT wait time
183	DFHTASK	Interval Control delay time
184	DFHTASK	Dispatchable Wait's wait time
186	DFHDATA	IMS (DBCTL) wait time
187	DFHDATA	DB2 ready queue wait time
188	DFHDATA	DB2 connection wait time
189	DFHDATA	DB2 wait time
191	DFHTASK	RRMS/MVS Indoubt wait time
192	DFHTASK	Request Receiver wait time
193	DFHTASK	Request Processor wait time
195	DFHTASK	CICS BTS Run transaction synchronous wait time
196	DFHSYNC	CICS BTS Syncpoint delay time
241	DFHSOCK	Inbound Socket I/O wait time
247	DFHTASK	CICS change-TCB mode delay time
250	DFHTASK	CICS MAXOPENTCBS delay time
254	DFHTASK	Java Virtual Machine (JVM) suspend time
268	DFHTASK	TCB mismatch wait time
277	DFHTASK	CICS MAXJVMTCBS delay time

Table 29. Performance class suspend (wait) time fields (continued)

Field ID	Owner	Field description
278	DFHTASK	CICS MAXHPTCBS delay time
279	DFHTASK	MVS storage constraint wait time
281	DFHTASK	CICS MAXSSLTCBS delay time
282	DFHTASK	CICS MAXXPTCBS delay time
285	DFHTASK	3270 bridge partner wait time
299	DFHSOCK	Outbound Socket I/O wait time
300	DFHSOCK	IPCONN link wait time
396	DFHDATA	WebSphere MQ GETWAIT wait time

The performance class data fields listed in Table 29 on page 316 all record the elapsed time waiting for a particular type of I/O operation or transaction suspend (wait). For example, DFHTERM field ID 009 records the elapsed time waiting for terminal I/O. The elapsed time includes not only the time during which the I/O operation is actually taking place, but also the time during which the access method is completing the outstanding event control block, and the time subsequent to that until the waiting transaction is redispatched by the CICS dispatcher domain.

Figure 113 shows a representation of the relationship of a typical transaction's wait time field with the suspend (wait) time, the dispatch time, CPU time and dispatch wait time (wait for redispatch) fields.

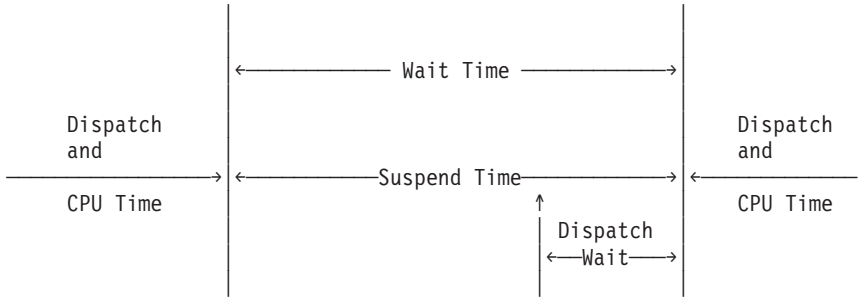

Figure 113. Suspend (wait) time relationships

Calculated fields: In the examples that follow, a number of calculations are shown that can be performed using the transaction's total suspend (wait) time field and the individual suspend (wait) time fields.

Total I/O wait time

Total I/O wait time =
(Terminal I/O wait time +
Temporary Storage I/O wait time +
Shared Temporary Storage I/O wait time +
Transient Data I/O wait time +
Journal (MVS Logger) I/O wait time +
File I/O wait time +
RLS File I/O wait time +
Coupling Facility Data Table I/O wait time +
Inbound Socket I/O wait time +

Outbound Socket I/O wait time +
Inter-Region (MRO) I/O wait time +
LU 6.1 I/O wait time +
LU 6.2 I/O wait time +
FEPI I/O wait time +
IPCONN link wait time)

Total Other wait time

Total Other wait time =
(First Dispatch delay time +
CICS MAXHPTCBS delay time +
CICS MAXJVMTCBS delay time +
CICS MAXOPENTCBS delay time +
Local ENQ delay time +
Global ENQ delay time +
Interval Control delay time +
Lock Manager (LM) delay time +
EXEC CICS WAIT EXTERNAL wait time +
EXEC CICS WAITCICS wait time +
Request Receiver wait time +
Request Processor wait time +
CICS MAXSSLTCBS delay time +
CICS MAXXPTCBS delay time +
CICS change-TCB mode delay time +
RRMS/MVS indoubt wait time +
3270 bridge partner wait time +
Coupling Facility Data Table (CFDT) server syncpoint wait time +
CICS BTS Run Transaction synchronous wait time +
CICS BTS Syncpoint delay time +
RMI suspend time +
JVM suspend time +
TCB mismatch wait time +
MVS storage constraint wait time +
Dispatchable Waits wait time)

Note:

1. The First Dispatch Delay field includes the MXT Delay and TRANCLASS delay fields.
2. The RMI Suspend Time field includes:
   - DB2 READYQ wait time
   - DB2 connection wait time
   - DB2 wait time
   - IMS wait time
   - WebSphere MQ GETWAIT wait time

   See “RMI elapsed and suspend time” on page 320 for further information.

Unaccounted (Uncaptured) wait time

The *unaccounted wait time* is the amount of transaction suspend (wait) time that is not specifically measured in an individual wait time field.

Unaccounted wait time =
(Suspend time - (Total I/O wait time + Total Other wait time))

Exception wait time

The exception wait time field, EXWTTIME (owner: DFHCICS, field ID: 103) is the accumulated time from all the exception conditions measured by the CMF exception class records for the transaction. For more information on the exception class records, see “CMF exception class data fields” on page 328.

Program load time

The program load time is the total elapsed time during which the user task waited for program fetches from the DFHRPL program library. Only fetches for programs with installed program definitions or autoinstalled as a result of application program requests are included in this figure. Installed programs residing in the LPA are not included because they do not incur a physical fetch from a program library.

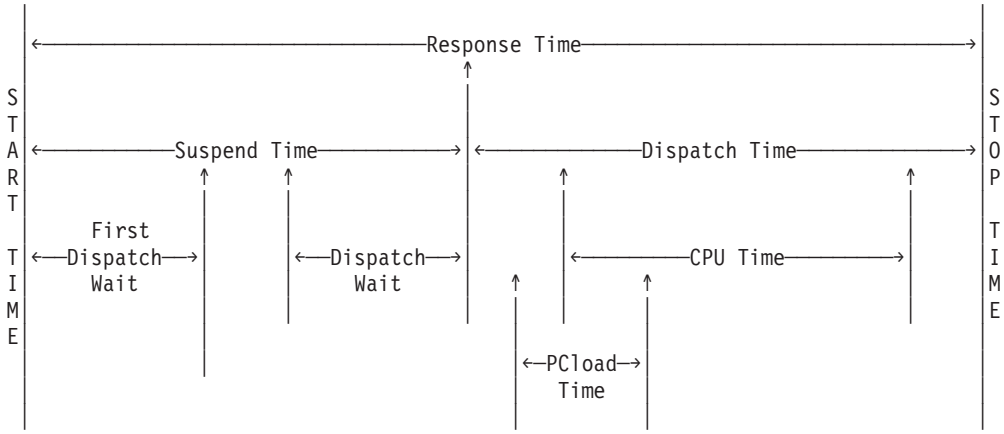

Figure 114. Program load time

Figure 114 shows an example of the relationship between the program load time field (owner: DFHPROG, field ID: 115) and the transaction dispatch time (owner: DFHTASK, field ID: 007) and the transaction suspend time (owner: DFHTASK, field ID: 014).

Syncpoint elapsed time

The performance class data includes a number of timing fields relating to the syncpoint processing performed by a transaction. These data fields include the following:

- Syncpoint elapsed time
- Coupling Facility Data Table (CFDT) server syncpoint time
- CICS Business Transaction Services (BTS) syncpoint delay time
- Object Transaction Services (OTS) indoubt wait time

These fields provide an in depth understanding of the amount of time a transaction spends processing syncpoints and the wait time for coupling facility data table server, CICS BTS syncpoint requests, and OTS indoubt time.

In particular, the CICS BTS syncpoint delay time field, SYNCDLY (owner: DFHSYNC, field ID: 196) can be used to determine the amount of time a transaction is suspended waiting for the syncpoint from the invoking (parent) transaction and should be analyzed in conjunction with the CICS BTS run transaction (ACQPROCESS or activity) wait time field (owner: DFHTASK, field ID: 195) from the invoking transaction to fully understand the syncpoint delay time in the correct context.

RMI elapsed and suspend time

Figure 115 shows an example of the relationship between the CICS Resource Manager Interface (RMI) elapsed and suspend time fields (owner: DFHTASK, field IDs: 170 and 171), the transaction dispatch time (owner: DFHTASK, field ID: 007) and the transaction suspend time (owner: DFHTASK, field ID: 014).

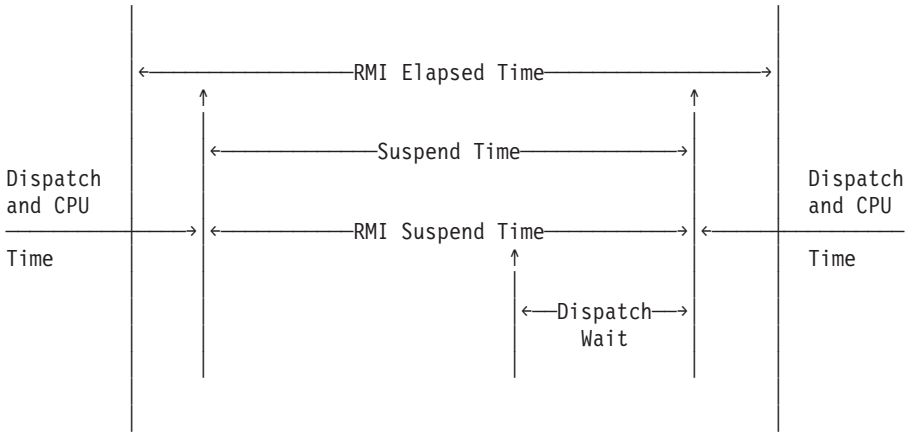

Figure 115. CICS Resource Manager Interface (RMI) elapsed and suspend time

When investigating performance problems relating to the CICS Resource Manager Interface (RMI) you will find it helpful in assisting your interpretation of the RMI timing fields if you have some knowledge of how CICS resource managers, such as DB2, IMS (DBCTL), WebSphere MQ, or user written, are being used by your CICS applications.

If an application invokes a CICS resource manager that in turn invokes another CICS resource manager from within the task-related user exit program (sometimes known as stacking RMIs) the CICS Resource Manager Interface (RMI) elapsed time field (RMITIME) will contain the total elapsed time from entry to exit of the first, or highest, level CICS resource manager.

Note: In CICS Transaction Server Version 1.3 or later, the DB2 wait, DB2 connection wait, and DB2 READYQ wait time fields as well as the IMS wait time field are included in the RMI suspend time.

For more detailed information on the timing fields for DB2 and IMS, see "DFHDATA fields" on page 272.

When investigating performance problems relating to the CICS Resource Manager Interface (RMI), you might also find it useful to read the following sections:

- "Open transaction environment" on page 322
- "DFHRMI fields" on page 281

RMI other wait time:

The *RMI other wait time* contains the suspend (wait) time in the CICS dispatcher domain for other Resource Managers such CICS Sockets or user written.

RMI Other wait time =
(RMI suspend -
(IMS wait time +

DB2 READYQ wait time +
DB2 Connection wait time +
DB2 wait time +
WebSphere MQ GETWAIT wait time))

JVM elapsed and suspend time

The JVM elapsed and suspend time fields provide an insight into the amount of time that a transaction spends in a Java Virtual Machine (JVM).

Care must be taken when using the JVM elapsed time (owner: DFHTASK, field ID: 253) and JVM suspend time (owner: DFHTASK, field ID: 254) fields in any calculation with other CMF timing fields. This is because of the likelihood of double accounting other CMF timing fields in the performance class record within the JVM time fields. For example, if a Java application program invoked by a transaction issues a read file (non-RLS) request using the Java API for CICS (JCICS) classes, the file I/O wait time is included in both the file I/O wait time field (owner: DFHFILE, field ID: 063), the transaction suspend time field (owner: DFHTASK, field ID: 014) as well as the JVM suspend time field.

A JVM application will invoke the CICS JVM for a number of reasons not just to invoke the main method of the application. These calls include:
- Creating and destroying the JVM
- Finding the wrapper class and the main method within the class
- Building the arguments to pass to the main method
- Invoking the main method of the application

The JVM elapsed and suspend time fields are best evaluated from the overall transaction performance view and their relationship with the transaction response time, transaction dispatch time, and transaction suspend time. The performance class data also includes the amount of processor (CPU) time that a transaction used whilst in a JVM on a CICS J8 mode TCB in the J8CPUT field (owner: DFHTASK, field ID: 260). When a transaction uses a JVM in user key, which runs on a CICS J9 mode TCB, the processor time is recorded in the J9CPUT field (owner: DFHTASK, field ID: 267).

Note: The number of Java API for CICS (JCICS) requests issued by the user task is included in the CICS OO foundation class request count field (owner: DFHCICS, field ID: 025).

In CICS Transaction Server for z/OS Version 2 Release 1, new monitoring fields were introduced to provide additional insight into the processing of CICS Java (JVM) applications. These new fields are, the JVM init time (owner: DFHTASK, field ID: 273), the JVM reset time (owner: DFHTASK, field ID: 275), and the JVM status information in byte 6 of the TRANFLAG field (owner: DFHTASK, field ID: 164).

Performance List and Summary reports: CICS PA provides Sample Report Forms that show the fields related to a transaction's use of a Java Virtual Machine (JVM):

Sample Form
Report

JVMLST
Performance List report (see “Performance List report” on page 19)

JVMSUM
Performance Summary report (see “Performance Summary report” on page 36)

Open transaction environment

The performance class data includes a number of timing fields relating to the exploitation of the CICS open transaction environment (OTE) by a transaction. These data fields provide an in depth understanding into the CICS dispatcher domain TCBs used by a transaction and include the following:

- QR mode TCB Dispatch and CPU time
- RO mode TCB Dispatch and CPU time
- Key 8 mode TCB Dispatch and CPU time
- Key 9 mode TCB Dispatch and CPU time
- J8, L8, S8 and X8 mode TCB CPU times
-
- QR mode TCB dispatch delay time
- CICS dispatcher TCB attach count
- CICS dispatcher TCB high-water-mark
- CICS dispatcher TCB change mode count
- CICS dispatcher change-TCB mode delay time
- Max open TCB delay time
- Max JVM TCB delay time
- Max SSL TCB delay time
- Max XPLink TCB delay time

For detailed information on all the fields relating to the CICS dispatcher domain including the CICS open transaction environment (OTE), see "DFHTASK fields" on page 287.

For more general information on the CICS open transaction environment (OTE), see the *CICS Application Programming Guide.*

For more information on the CICS DB2 attachment facility and its use of the open transaction environment (OTE), see the *CICS DB2 Guide*.

User storage

The performance class data provides a number of data fields relating to the CICS storage used by a transaction. These fields are designed to provide detailed information on the amount and location of the CICS storage used by a transaction. For each CICS DSA (below or above the 16MB line) used by a transaction, the data fields provided include:

- Storage GETMAIN request count
- Storage high-water mark
- Storage occupancy measurement

The user storage fields are described in detail in "DFHSTOR user storage fields" on page 284.

User storage occupancy: A storage occupancy count measures the area under the curve of user-task storage in use against elapsed time. The unit of measure is the *byte-unit,* where the *unit* is equal to 1024 microseconds, or 1.024 milliseconds. For example, a user task occupying 256 bytes for 125 milliseconds is measured as follows (where *ms* is milliseconds):

```
125 / 1.024 ms = 122 units * 256
               = 31232 byte-units
```

Note: All references to *Start time* and *Stop time* in the calculations below refer to the middle 4 bytes of each 8 byte Start/Stop time field. The Start and Stop time fields are standard S/390® STCK time values where bit 51 of the Start time or Stop time represents a unit of 16 microseconds.

1. To calculate the response time and convert into microsecond units:

   ```
   Response = ((Stop time - Start time) * 16)
   ```

2. To calculate the number of 1024 microsecond units:

   ```
   Units = (Response / 1024)
   ```

   or

   ```
   Units = ((Stop time - Start time) / 64
   ```

3. To calculate the average user-task storage used from the storage occupancy count:

   ```
   Average user-task storage used = (Storage Occupancy / Units)
   ```

4. To calculate units per second:

   ```
   Units Per Second = (1000000 / 1024) = 976.5625
   ```

5. To calculate the response time in seconds:

   ```
   Response = (((Stop time - Start time) * 16) / 1000000)
   ```

During the life of a user task, CICS measures, calculates, and accumulates the storage occupancy at the following points:

- Before a storage GETMAIN request increases the current user-storage values
- Before a storage FREEMAIN request decreases the current user-storage values
- Just before a performance record is created for the user task.

Figure 116 shows a pictorial representation of how the user storage occupancy measurement is calculated.

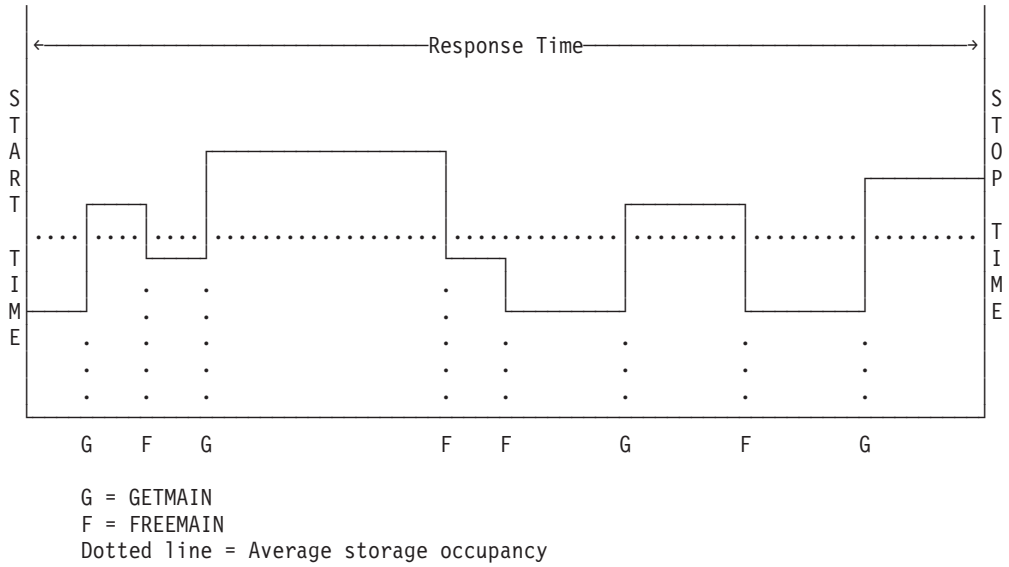

Figure 116. Transaction user storage occupancy

Shared storage

The performance class data also provides a number of fields relating to the CICS shared storage used by a transaction. These fields are designed to provide detailed information on the amount and location of the CICS shared storage used by a transaction. The data fields provided include:

- Shared storage GETMAIN request count
- Number of bytes of shared storage GETMAINed
- Number of bytes of shared storage FREEMAINed.

The shared storage fields are described in detail in “DFHSTOR shared storage fields” on page 285.

Program storage

The level of program storage in use is incremented at each program LOAD, LINK, and XCTL event by the size (in bytes) of the referenced program, and is decremented at each program RELEASE or RETURN event.

Note: On a program XCTL event, the program storage currently in use is also decremented by the size of the program issuing the program XCTL because the program is no longer required by the task.

Figure 117 shows the relationships between the *high-water mark* data fields that contain the maximum amounts of program storage in use by the user task. Field PCSTGHWM (owner: DFHSTOR, field ID: 087) contains the maximum amount of program storage in use by the task both above and below the 16MB line. Fields PC31AHWM (owner: DFHSTOR, field ID: 139) and PC24BHWM (owner: DFHSTOR, field ID: 108) are subsets of PCSTGHWM, containing the maximum amounts of program storage in use above and below the 16MB line, respectively. Other program storage fields, which are also a subset of PCSTGHWM, contain the maximum amounts of program storage in use by the task in each of the CICS dynamic storage areas (DSAs).

Note: The totaled values of all the subsets in a superset might not necessarily equate to the value of the superset. For example, the value of PC31AHWM plus the value of PC24BHWM might not equal the value of PCSTGHWM. This is because the peaks in the different types of program storage acquired by the user task do not necessarily occur simultaneously.

The program storage *high-water mark* fields are described in detail in "DFHSTOR program storage fields" on page 285.

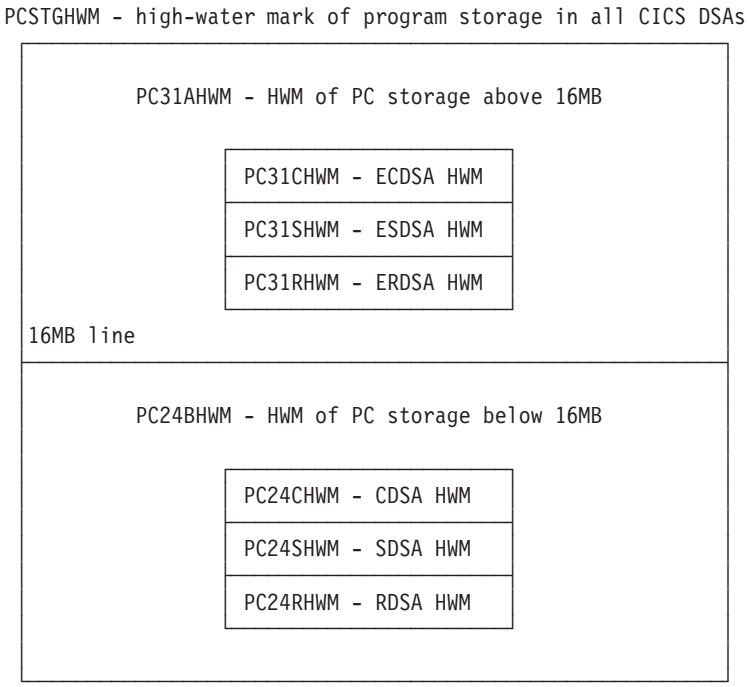

Figure 117. Relationships between the high-water mark program storage data fields

Correlating performance class data

The performance class data provides several fields that can be used to correlate all the related performance class data records from a single or multiple CICS systems to monitor the total amount of resources used by a transaction. The performance class records can be correlated by any of the following:

- Network unit-of-work ID
- Network unit-of-work ID and DB2 accounting correlation token
- Transaction group ID
- CICS BTS process ID (root activity ID)

The following sections describe the various ways in which the performance class records can be correlated.

Correlating by network unit-of-work ID

The network unit-of-work ID (owner: DFHTASK, field IDs: 097 and 098) can be used to correlate the performance class data records from a single or multiple CICS systems.

This name is assigned at transaction attach time using either a netname derived from the terminal (when the task is attached to a local VTAM terminal), or the netname passed as part of an IRC (MRO) or ISC (APPC) attach header combined with a STCK-derived token created by the originating system, or the network unit-of-work ID passed as part of an IRC (MRO) or ISC (APPC) attach function management header (FMH).

Cross-System Work report and extract: The CICS PA Cross-System Work report correlates performance class data from a single or multiple CICS systems, as long as the performance data is part of the same network unit-of-work.

The Cross-System Work report is particularly useful in understanding the type and flow of a CICS transaction across CICS systems, including:

- Transaction routing
- Function shipping
- Distributed Program Link (DPL)
- External Call Interface (ECI) over TCP/IP

For more information, see “Cross-System Work report” on page 69 and “Cross-System Work extract” on page 203.

Workload Activity report: The CICS PA Workload Activity report also correlates the performance records by network unit-of-work ID and can be used to understand the type and flow of a CICS transaction across CICS systems and its relationship with the MVS Workload Manager (WLM).

For more information on the Workload Activity report, see “Workload Activity report” on page 88.

Correlating by network unit-of-work ID and DB2 accounting token

The CICS performance class data records can also be correlated with the DB2 SMF 101 Class 2 accounting records. To provide the necessary accounting record granularity in the DB2 accounting records, you need to specify either ACCOUNTREC(TASK) or ACCOUNTREC(UOW) in the DB2 connection and DB2 entry resource definitions. Specifying ACCOUNTREC(TASK) ensures that there is a minimum of one DB2 accounting record for each task but there could be more depending on thread reuse. ACCOUNTREC(TASK) is recommended rather than

ACCOUNTREC(UOW) as this provides better matching between CMF performance records and DB2 accounting records.

DB2 report: The CICS PA DB2 report correlates the performance records by network unit-of-work ID and for those with DB2 activity, matches the DB2 accounting (SMF 101) records belonging to the same network unit-of-work. The DB2 report enables you to view CICS and DB2 resource usage statistics together in a single report.

For more information on the DB2 report, see "DB2 report" on page 141.

For more information on the CICS DB2 connection and DB2 entry definition, see the *CICS DB2 Guide* and the *CICS Resource Definition Guide.*

For more information on DB2 accounting and monitoring, see the *CICS DB2 Guide.*

Correlating by transaction group ID

The transaction group ID (owner: DFHTASK, field ID: 082) is assigned at transaction attach time and can be used to correlate the performance class records for the transactions that CICS runs for the same incoming work request (for example, the CWXN and CWBA transactions for CICS Web support requests).

This transaction group ID relationship is particularly useful when applied to the requests that originate through the CICS Web support (CWS), CICS IIOP, ECI over TCP/IP, or the 3270 bridge interface. The transaction origin can be determined from the transaction origin type in byte 4 of the transaction flags field (owner: DFHTASK, field ID: 164) as described in "DFHTASK fields" on page 287.

Transaction Group report: The CICS PA Transaction Group report correlates the performance class data records from a single system, as long as the transactions are part of the same incoming work request (they have the same transaction group ID).

The Transaction Group report is particularly useful in understanding the relationship and flow of transactions that originate through the CICS Web support (CWS), CICS Internet Inter-ORB protocol (IIOP), External Call Interface (ECI) over TCP/IP, or the 3270 bridge interface.

For more information on the Transaction Group report, see "Transaction Group report" on page 76.

Correlating by CICS BTS process ID (root activity ID)

The CICS Business Transaction Services (BTS) process ID (owner: DFHCBTS, field ID: 202), also known as the root activity ID, can be used to correlate the performance class records for the transactions that CICS runs that form part of the same process ID.

Note: Not all transactions that use CICS Business Transaction Services have a process ID assigned at transaction attach. However, the CICS PA BTS report includes ***all*** the performance class records for transactions that have used any CICS BTS services regardless of whether they have been assigned a process ID at transaction attach. In this case, whether or not the performance class records form part of the same process ID is determined by comparing the transaction sequence number field (owner: DFHTASK, field ID: 031).

For detailed information on the monitoring data provided for the CICS Business Transaction Services (BTS) support, see “DFHCBTS fields” on page 264.

BTS report: The CICS PA BTS report correlates the performance class records by CICS BTS process ID. See the “BTS report” on page 84 for information on the report provided by CICS PA to analyze the transactions using CICS Business Transaction Services.

For more information on CICS Business Transaction Services (BTS), see *CICS Business Transaction Services.*

CICS Web support

The CICS Monitoring Facility provides extensive performance class monitoring data for those applications using the CICS Web support (CWS). This data includes:

- Client IP address
- EXEC CICS WEB API requests
- EXEC CICS DOCUMENT API requests
- CICS support for TCP/IP (socket domain) requests

In CICS Transaction Server for z/OS Version 2 Release 1, the performance class monitoring data was significantly enhanced with the addition of a number of new data fields which provided more detailed information for those applications using the CICS Web support. These fields included:

- The TCP/IP service name and port number of the installed TCP/IP resource definition from which the transaction was initiated
- EXEC CICS EXTRACT WEB API request count
- EXEC CICS WEB Browse API requests count
- EXEC CICS EXTRACT TCPIP and EXTRACT CERTIFICATE API requests count

In CICS Transaction Server for z/OS Version 3 Release 1, the performance class monitoring data has been further enhanced with the addition of a number of new monitoring data fields for the EXEC CICS WEB API requests used by application programs that using the CICS Web support for CICS as an HTTP client.

For detailed information on the monitoring data provided for the CICS Web support, see the DFHWEBB performance data on page “DFHWEBB fields” on page 309, the DFHDOCH performance data on page “DFHDOCH fields” on page 274, and the DFHSOCK performance data on page “DFHSOCK fields” on page 282.

Transaction Group report

The CICS PA Transaction Group report is particularly useful in understanding the relationship and flow of transactions that originate through the CICS Web support. For more information on this report, see “Transaction Group report” on page 76.

Performance List and Summary reports

CICS PA provides several Sample Report Forms that you can use for detailed analysis of transactions that use CICS Web support:

Sample Forms
Report

WBS3LST, WB3LST
Performance List reports (see “Performance List report” on page 19)

WB3SUM, WBS3SUM
Performance Summary reports (see "Performance Summary report" on page 36)

For more general information on the CICS Web support, see the *CICS Internet Guide.*

CICS TCP/IP support

In CICS Transaction Server for z/OS Version 2, the performance class monitoring data has been enhanced with the addition of a number of new data fields which provide additional detailed information for those applications using the CICS Web support (CWS), CICS IIOP, and the CICS ECI over TCP/IP support.

The performance class monitoring data provided includes the following:

- the TCP/IP service name and port number of the installed TCP/IP service resource definition from which the transaction was initiated
- the Client IP address in the interpreted format of *nnn.nnn.nnn.nnn*.
- Inbound and outbound socket I/O wait times
- Extract TCP/IP request counts
- Inbound and Outbound Socket request and character counts, - send, receive, and so on

For detailed information on the data provided for the CICS support for TCP/IP, see "DFHSOCK fields" on page 282.

For more information on the reports provided by CICS PA to analyze the performance class data by transaction group ID, see "Transaction Group report" on page 76.

CICS PA has provided two sample Report Forms that you can use to tailor the Performance List Report (TCPLST Form) and Performance Summary Report (TCPSUM Form) for analyzing the performance class data for the CICS support for TCP/IP.

For more general information, see the *CICS Internet Guide,* the *CICS External Interfaces Guide,* and *CICS Family: Communicating from CICS on System/390®.*

CMF exception class data fields

All of the exception class data fields that can be produced by the CICS Monitoring Facility (CMF) are described in this section.

In contrast to performance class data records whose format is described in associated dictionary entries, exception class data records are not defined in the dictionary record. The exception class data records are fixed format.

The following field descriptions show the name of the exception class data field, the type, and the size. The data type can be one of the following:

A - a 32- or 64- bit count
C - a character string
P - a packed decimal
T - a time stamp

`EXCMNTRN (Type-C, 4 bytes)`
Transaction identification.

EXCMNTER (Type-C, 4 bytes)
Terminal or session identification. This field is null if the task is not associated with a terminal or session.

EXCMNUSR (Type-C, 8 bytes)
User identification at task attach. This can also be a remote user identifier for a task created as the result of receiving an ATTACH request across an MRO or APPC link with attach-time security enabled.

EXCMNTST (Type-C, 4 bytes)
Type of transaction start (Start Code or Start Type):

TO The transaction was started (attached) by input of the transaction ID from the terminal user.

S Attached by automatic transaction initiation (ATI) without data. The transaction was started (attached) by an application program using the EXEC CICS START TRANSID('xxxx') ... API command. CICS internal transactions such as CATR, CEJR, CESN, CQRY, CRPM, CRSQ, CSFU, CSGM, CXRE, and CWBG are just some examples of CICS transactions that use this start type.

SD Attached by automatic transaction initiation (ATI) with data. The transaction was started (attached) by an application program using the EXEC CICS START TRANSID('xxxx') FROM(xxxx) ... API command. CICS internal transactions such as CLS1 is an example of a transaction that uses this start type.

QD The transaction was started (attached) because the trigger level of an intrapartition transient data queue was reached. If the transaction is not associated with a terminal facility, the Transaction Facility Name (field: FCTYNAME, owner: DFHTASK, field ID: 163) provides the name of the transient data queue ID.

U The transaction was started (attached) by a CICS internal function generally as a result of some user request. CICS internal transactions such as CATA, CATD, CEJR, CESC, CEX2, CFOR, CFQR, CFQS, CFTL, CGRP, CIEP, CIOF, CIOR, CIRP, CITS, CJTR, CLQ1, CLQ2, CLS2, COTR, COVR, CPLT, CPMI, CRSY, CSFR, CSHQ, CSNC, CSNE, CSOL, CSSY, CSTE, CSZI, CWBA, and CWXN are just some examples of the CICS transactions that use this start type. In addition to CICS internal functions, transaction's that are being run under the control of the CICS Execution Diagnostic Facility transaction, CEDF, are also started (attached) with this start type.

TP Attached from terminal (TCTTE) transaction ID. The preset transaction was started (attached) by input from the terminal user or by the previous transaction using the EXEC CICS RETURN TRANSID('xxxx') IMMEDIATE ... API command. The transaction ID can be preset either from the terminal definition, from using the CRTE routing transaction, or by the previous transaction's application program using the EXEC CICS RETURN TRANSID('xxxx') ... API command with or without the IMMEDIATE option specified. Some examples of CICS transactions which use this start type are: CESN (except when used as the initial good morning transaction), CRTE (when invoked on the routed system), and CSSF when invoked as part of a CRTE CANCEL (the initial CRTE transaction which establishes the routing session uses the start type 'TO').

SZ Attached by the Front End Programming Interface (FEPI). The transaction was started (attached) as the *receive program* by the Front End Programming Interface as a result of inbound data. In addition to inbound

data arriving, the *receive program* is also started (attached) if the time limit set by a FEPI START command expires, the session is lost, or anything that causes a FEPI RECEIVE command to complete. See the *CICS Front End Programming Interface User's Guide* for more information on FEPI *started tasks*.

EXCMNSTA (Type-T, 8 bytes)
Start time of the exception.

EXCMNSTO (Type-T, 8 bytes)
Finish time of the exception.

Note: The performance class exception wait time field, EXWTTIME (owner: DFHCICS, field ID: 103), is a calculation based on subtracting the start time of the exception (EXCMNSTA) from the finish time of the exception (EXCNBSTO).

EXCMNTNO (Type-P, 4 bytes)
The transaction identification number.

Note: The transaction number field is normally a 4-byte packed decimal number. However, some CICS system tasks are identified by special characters in this field, as follows:
III for system initialization tasks
TCP for the terminal control task

These special identifiers are placed in bytes 2 through 4. Byte 1 is blank (X'40') before the terminal control TCP identifier, and a null value (X'00') before the others.

EXCMNTPR (Type-A, 4 bytes)
The transaction priority of the task when monitoring of the task was initialized at transaction attach.

EXCMNLUN (Type-C, 8 bytes)
The LUNAME field is either the VTAM netname (LUname) of the terminal ID (if the Access Method for the terminal is VTAM) or the VTAM generic APPLID of the connection for the session ID (for an EXCI connection this field is blank). The transaction's terminal or session type can be identified from the Nature (byte 0) field within the terminal information TERMINFO field (owner: DFHTERM, field ID: 165). This field is null if the transaction was not associated with a terminal or session facility.

EXCMNEXN (Type-A, 4 bytes)
The exception sequence number for this task.

EXCMNRTY (Type-C, 8 bytes)
The exception resource type. For more information, see Table 30 on page 333.

EXCMNRID (Type-C, 8 bytes)
The exception resource identification. For more information, see Table 30 on page 333.

EXCMNTYP (Type-A, 2 bytes)
The exception type. This field can be set to one of the following values:
X'0001'
Exception due to a wait (EXCMNWT)
X'0002'
Exception due to a buffer wait (EXCMNBWT)
X'0003'
Exception due to a string wait (EXCMNSWT)

For more information on the exception types, see Table 30 on page 333.

EXCMNTCN (Type-C, 8 bytes)
The transaction's transaction class name (TRANCLASS). This field is null if the transaction is not defined in a transaction class.

EXCMNSRV (Type-C, 8 bytes)
The MVS Workload Manager (WLM) service class for this transaction. This field is null if there are no transaction classification rules defined for CICS subsystems in the active MVS Workload Manager (WLM) service policy or the transaction was WLM-classified in another CICS region.

EXCMNRPT (Type-C, 8 bytes)
The MVS Workload Manager (WLM) report class for this transaction. This field is null if there are no transaction classification rules defined for CICS subsystems in the active MVS Workload Manager (WLM) service policy or the transaction was WLM-classified in another CICS region.

EXCMNNPX (Type-C, 20 bytes)
The fully qualified name by which the originating system is known to the VTAM network. This name is assigned at attach time using either the netname derived from the TCT (when the task is attached to a local terminal), or the netname passed as part of an ISC APPC or IRC MRO attach header. At least three padding bytes (X'00') are present at the right end of the name.

If the originating terminal is VTAM across an ISC APPC or IRC MRO link, the NETNAME is the *networkid.LUname*. If the terminal is non-VTAM, the NETNAME is *networkid.generic_APPLID*.

All originating information is passed as part of an ISC LUTYPE6.1 attach header has the same format as the non-VTAM terminal originators above.

When the originator is communicating over an external CICS interface (EXCI) session, the name is a concatenation of:

```
'DFHEXCIU | .       |  MVS Id    |  Address Space Id (ASID)'

 8 bytes  | 1 byte  |  4 bytes   |  4 bytes
```

derived from the originating system. That is, the name is a 17-byte LU name consisting of:

- An 8-byte eye-catcher set to DFHEXCIU.
- A 1-byte field containing a period.
- A 4-byte field containing the MVSID, in characters, under which the client program is running.
- A 4-byte field containing the address space ID (ASID) in which the client program is running. This field contains the 4-character EBCDIC representation of the 2-byte hexadecimal address space ID.

For more information on the external CICS interface (EXCI), see the *CICS External Interfaces Guide.*

EXCMNNSX (Type-C, 8 bytes)
The name by which the network unit-of-work ID is known within the originating system. This name is assigned at transaction attach time using either a STCK-derived token created by the originating system, or the network unit-of-work ID passed as part of an IRC (MRO) or ISC (APPC) attach function management header (FMH).

The first six bytes of this field are a binary value derived from the system clock of the originating system and which can wrap round at intervals of several months.

The last two bytes of this field are a syncpoint sequence count. This count might change during the life of the task as a result of syncpoint activity.

For CICS BTS transactions, the network unit-of-work ID is also passed to a transaction that is invoked synchronously by an application program issuing either a CICS BTS run ACQPROCESS synchronous or run activity synchronous command.

Note: When using MRO or ISC, the EXCMNNSX field can be combined with the EXCMNNPX field to uniquely identify a task across each CICS system. It must be combined with the EXCMNNPX because the EXCMNNSX field on its own is unique only to the originating CICS system.

EXCMNTRF (Type-A, 8 bytes)
Transaction flags, a string of 64 bits used for signaling transaction definition and status information:

Byte 0 Transaction facility identification:
- **Bit 0** Transaction facility name = none
- **Bit 1** Transaction facility name = terminal
- **Bit 2** Transaction facility name = surrogate
- **Bit 3** Transaction facility name = destination
- **Bit 4** Transaction facility name = 3270 bridge
- **Bit 5-7** Reserved

Byte 1 Transaction identification information:
- **Bit 0** System transaction
- **Bit 1** Mirror transaction
- **Bit 2** DPL Mirror transaction
- **Bit 4** ONC RPC alias transaction
- **Bit 4** WEB alias transaction
- **Bit 5** 3270 Bridge transaction
- **Bit 6** Reserved
- **Bit 7** CICS BTS run transaction (ACQPROCESS or activity) synchronous

Byte 2 MVS workload manager request (transaction) completion information:
- **Bit 0** Report the total response time (begin-to-end phase) for the completed work request (transaction)
- **Bit 1** Notify that the entire execution phase of the work request (transaction) is complete
- **Bit 2** Notify that a subset of the execution phase of the work request (transaction) is complete
- **Bit 3-7** Reserved

Byte 3 Transaction definition information:
- **Bit 0** Taskdataloc = BELOW
- **Bit 1** Taskdatakey = CICS
- **Bit 2** Isolate = NO
- **Bit 3** Dynamic = YES
- **Bit 4-7** Reserved

Byte 4 Transaction origin type, “DFHTASK fields” on page 287 for details.

Byte 5 Reserved

Byte 6 JVM status information:
- **Bit 0** JVM marked unresettable
- **Bit 1-7** Reserved

Byte 7 Recovery manager information:

Bit 0 Indoubt wait = no
Bit 1 Indoubt action = commit
Bit 2 Recovery manager - UOW resolved with indoubt action
Bit 3 Recovery manager - Shunt
Bit 4 Recovery manager - Unshunt
Bit 5 Recovery manager - Indoubt failure
Bit 6 Recovery manager - Resource owner failure
Bit 7 Reserved

EXCMNFCN (Type-C, 4 bytes)
Transaction facility name. This field is null if the transaction is not associated with a facility. The transaction facility type (if any) can be identified using byte 0 of the transaction flags field, TRANFLAG (owner: DFHTASK, field ID: 164).

EXCMNCPN (Type-C, 8 bytes)
The name of the application program that was currently executing when the resource shortage condition occurred as identified by the exception record.

EXCMNBTR (Type-C, 4 bytes)
3270 Bridge listener transaction identification.

EXCMNURI (Type-C, 16 bytes)
RRMS/MVS unit-of-recovery ID (URID).

For more general information on the Recoverable Resource Management Services (RRMS), see the *CICS External Interfaces Guide.*

EXCMNRIL (Type-A, 4 bytes)
The length of the resource name in the exception resource identification field, EXCMNRIX.

EXCMNRIX (Type-C, 256 bytes)
The exception resource identification (extended).

EXCMNNID (Type-C, 8 bytes)
The network ID field, NETID, is the network ID portion of the Network Qualified Name (NQNAME) received from VTAM during bind or logon for CICS terminal resources using any VTAM LUALIAS (defined or dynamic). If the resource has not logged on or an NQNAME was not received, then this field is set to null.

EXCMNRLU (Type-C, 8 bytes)
The Real LUname (EXCMNRLU) field is the VTAM netname (LUname) of the terminal ID for CICS terminal resources using any VTAM LUALIAS (defined or dynamic). If the resource has not logged on or an NQNAME was not received, then this field is set to null. Also, see the field, EXCMNLUN.

Table 30 shows the values and relationships of the exception type (EXCMNTYP), resource type (EXCMNRTY), and resource identification (EXCMNRID) fields.

Table 30. Relationships between the exception type, resource type, and resource identification

EXCMNTYP Exception type	EXCMNRTY Resource type	EXCMNRID Resource ID	Exception description
EXCMNWT	CFDTLRSW	poolname	Wait for a CF data table locking request slot.
EXCMNWT	CFDTPOOL	poolname	Wait for a CF data table non-locking request slot.
EXCMNWT	STORAGE	CDSA	Wait for CDSA storage

Table 30. Relationships between the exception type, resource type, and resource identification (continued)

EXCMNTYP Exception type	EXCMNRTY Resource type	EXCMNRID Resource ID	Exception description
EXCMNWT	STORAGE	ECDSA	Wait for ECDSA storage
EXCMNWT	STORAGE	UDSA	Wait for UDSA storage
EXCMNWT	STORAGE	EUDSA	Wait for EUDSA storage
EXCMNWT	STORAGE	SDSA	Wait for SDSA storage
EXCMNWT	STORAGE	ESDSA	Wait for ESDSA storage
EXCMNWT	STORAGE	RDSA	Wait for RDSA storage
EXCMNWT	STORAGE	ERDSA	Wait for ERDSA storage
EXCMNWT	TEMPSTOR	TS Qname	Wait for temporary storage
EXCMNBWT	LSRPOOL	filename	Wait for a buffer associated with an LSRPOOL
EXCMNBWT	TEMPSTOR	TS Qname	Wait for a buffer associated with DFHTEMP
EXCMNSWT	FILE	filename	Wait for a string associated with a file
EXCMNSWT	LSRPOOL	filename	Wait for a string associated with an LSRPOOL
EXCMNSWT	TEMPSTOR	TS Qname	Wait for a string associated with DFHTEMP

Note: The extended resource ID field, EXCMNRIX, should be used for analyzing the exception records for the TEMPSTOR exception resource types because the temporary storage queue names are now 16-bytes in length.

CMF transaction resource class data fields

The transaction resource class data fields produced by the CICS Monitoring Facility (CMF) are described in this section.

Transaction resource class data provides additional transaction-level information about individual resources accessed by a transaction. Currently, the transaction resource class covers file and temporary storage queue resources.

The maximum number of files and temporary storage queues monitored for each transaction is limited by the FILE and TSQUEUE parameters on the DFHMCT TYPE=INITIAL macro. The default is FILE=8 for files and TSQUEUE=4 for temporary storage queues. Therefore, you might need to assemble an MCT that specifies either or both FILE and TSQUEUE options if the default values are insufficient, or if you do not want to collect transaction resource data for either files or temporary storage queues. One transaction resource record is written for each transaction that is being monitored, provided the transaction accesses at least one of the resources for which monitoring data is requested, (for example, at least 1 file if you specify FILE=*number*).

Transaction resource records are variable length, depending on the number of resources for which data is being collected (for example, one transaction might access only 1 file, another 5 files and 2 temporary storage queues, and so on).

For only one file, the record length is 188 bytes plus 96 bytes for the file data (284 bytes). Each additional file adds another 96 bytes. The maximum number of files for which you can collect transaction resource data is 64.

For only one temporary storage queue, the record length is 188 bytes plus 96 bytes for the temporary storage queue data (284 bytes). Each additional temporary storage queue adds another 96 bytes. The maximum number of temporary storage queues for which you can collect transaction resource data is 32.

Performance class data also provides information about file and temporary storage queue resource accesses, but this information in the performance record is given in total only for all files (see "DFHFILE fields" on page 276) and all temporary storage queues (see "DFHTEMP fields" on page 305). Transaction resource data breaks this information down by individual file name and temporary storage queue name, up to the maximum number specified in the MCT. Transaction resource information is completed for each task when the task terminates.

You enable transaction resource class monitoring at startup by coding MNRES=ON (together with MN=ON) as a system initialization parameter. Alternatively, you can use one of the following commands to enable transaction resource class monitoring dynamically:

- CEMT SET MONITOR ON RESRCE
- EXEC CICS SET MONITOR STATUS(ON) RESRCECLASS(RESRCE)

In contrast to performance class data records whose format is described in associated dictionary entries, transaction resource class data records are not defined in the dictionary record. The transaction resource class data records are fixed format.

Task identification fields

This section describes the transaction header fields in a transaction monitoring resource record.

MNR_ID_TRANID (Type-C, 4 bytes)
Transaction identifier.

MNR_ID_TERMID (Type-C, 4 bytes)
Terminal identifier. This field is null if the task is not associated with a terminal or session.

MNR_ID_USERID (Type-C, 4 bytes)
User identification at task creation. This can also be the remote user identifier for a task created as the result of receiving an ATTACH request across an MRO or APPC link with attach-time security enabled.

MNR_ID_SYTPE (Type-C, 4 bytes)
Transaction start type. The high-order byte (0 and 1) can have one of the following values:

- **TO** Attached from terminal input
- **S** Attached by automatic transaction initiation (ATI) without data
- **SD** Attached by automatic transaction initiation (ATI) with data
- **QD** Attached by transient data trigger level
- **U** Attached by user request
- **TP** Attached from terminal TCTTE transaction ID
- **SZ** Attached by Front End Programming Interface (FEPI)

MNR_ID_START (Type-T, 8 bytes)
Start time of the transaction.

MNR_ID_STOP (Type-T, 8 bytes)
Stop time of the transaction.

MNR_ID_TASKNO (Type-A, 4 bytes)
The transaction identification number (the task number allocated to the transaction at task attach).

MNR_ID_LUNAME (Type-C, 8 bytes)
VTAM logical unit name (if available) of the terminal associated with this transaction. If the task is executing in an application-owning or file-owning region, the LUNAME is the generic applid of the originating connection for MRO, LUTYPE6.1, and LUTYPE6.2 (APPC). The LUNAME is blank if the originating connection is an external CICS interface (EXCI).

MNR_ID_PGMNAME (Type-C, 8 bytes)
The name of the first program invoked at attach-time. For more information, see the performance class data field PGMNAME (owner: DFHPROG, field ID: 071).

MNR_ID_UOW_PX (Type-C, 20 bytes)
This field contains the same information as the performance class data field NETUOWPX (owner: DFHTASK, field ID: 097).

MNR_ID_UOW_SX (Type-C, 8 bytes)
This field contains the same information as the performance class data field NETUOWSX (owner: DFHTASK, field ID: 098).

MNR_ID_TRN_FLAGS (Type-A, 8 bytes)
Transaction flags, a string of 64 bits used for signaling transaction definition and status information. For details, see the performance class data field TRANFLAG (owner: DFHTASK, field ID: 164).

MNR_ID_RSYSID (Type-C, 4 bytes)
The name (system ID) of the remote system to which this transaction was routed, either statically or dynamically. For more information, see the performance class data field RSYSID (owner: DFHCICS, field ID: 130).

MNR_ID_FCTYNAME (Type-C, 4 bytes)
Transaction facility name. This field is null if the transaction is not associated with a facility. You can identify the transaction facility type (if any) using byte 0 of the transaction flags (MNR_ID_TRN_FLAGS) field. For details, see the performance class data field FCTYNAME (owner: DFHTASK, field ID: 163).

MNR_ID_RTYPE (Type-C, 4 bytes)
Transaction resource monitoring record type (low-order byte-3). Currently this can have only one value, T, indicating a record output for task termination. For more information about record types, see the performance class data field RTYPE (owner: DFHCICS, field ID: 112).

TERMINFO (Type-A, 4 bytes)
Terminal or session information for the task principal facility. For more information about terminal information, see the performance class data field TERMINFO (owner: DFHTERM, field ID: 165).

MNR_ID_TERMCNNM (Type-C, 4 bytes)
Terminal session connection name. If the terminal facility associated with this transaction is a session, this field is the name of the owning connection (system ID). For more information, see the performance class data field TERMCNNM (owner: DFHTERM, field ID: 169).

MNR_ID_RES_FLAGS (Type-A, 4 bytes)
Resource flags, a string of 32 bits used for signaling resource status information.

Byte 0
Resource status information:

Bit 0
Maximum number of files to be monitored (defined in the MCT) has been exceeded by the transaction (X'80')

Bit 1
Maximum number of temporary storage queues to be monitored (defined in the MCT) has been exceeded by the transaction (X'40')

Bit 2
The maximum number of distributed program link requests to be monitored (defined in the MCT) has been exceeded by the transaction (X'20').

Bits 3-7
Reserved.

Bytes 1-3
Reserved.

MNR_ID_ISIPICNM (Type-C, 8 bytes)
The name of the IPIC (IPCONN) entry of the TCP/IP service that attached the user task. For more information, see field 305 (ISIPICNM) in the DFHSOCK performance-class data group.

MNR_ID_CLIPADDR (Type-C, 40 bytes)
The IP address of the originating client or Telnet client. For more information, see field 318 (CLIPADDR) in the DFHSOCK performance-class data group.

MNR_ID_ORIGIN_NETWKID (Type-C, 8 bytes)
The network identifier from which this work request (transaction) originated. For more information, see field 359 (ONETWKID) in the DFHCICS performance data group.

MNR_ID_ORIGIN_APPLID (Type-C, 8 bytes)
The applid of the CICS region where this work request (transaction) originated; for example, the region in which the CWXN task ran. For more information, see field 360 (OAPPLID) in the DFHCICS performance data group.

MNR_ID_ORIGIN_ATT_TIME (Type-T, 8 bytes)
The time when the originating task, for example, the CWXN task, was started. For more information, see field 361 (OSTART) in the DFHCICS performance data group.

MNR_ID_ORIGIN_TRANNUM (Type-P, 4 bytes)
The number of the originating task; for example, the CWXN task. For more information, see field 362 (OTRANNUM) in the DFHCICS performance data group.

MNR_ID_ORIGIN_TRANID (Type-C, 4 bytes)
The transaction ID (TRANSID) of the originating task; for example, the CWXN task. For more information, see field 363 (OTRAN) in the DFHCICS performance data group.

MNR_ID_ORIGIN_USERID (Type-C, 8 bytes)
The originating Userid-2 or Userid-1, for example, from CWBA, depending on the originating task. For more information, see field 364 (OUSERID) in the DFHCICS performance data group.

MNR_ID_ORIGIN_USER_CORR (Type-C, 64 bytes)
The originating user correlator. For more information, see field 365 (OUSERCOR) in the DFHCICS performance data group.

MNR_ID_ORIGIN_TCPIPSERV (Type-C, 8 bytes)
The name of the originating TCPIPSERVICE. For more information, see field 366 (OTCPSVCE) in the DFHCICS performance data group.

MNR_ID_ORIGIN_PORTNUM (Type-A, 4 bytes)
The port number used by the originating TCPIPSERVICE. For more information, see field 367 (OPORTNUM) in the DFHCICS performance data group.

MNR_ID_ORIGIN_CLIPADDR (Type-C, 40 bytes)
The IP address of the originating client or Telnet client. For more information, see field 372 (OCLIPADR) in the DFHCICS performance data group.

MNR_ID_ORIGIN_CLIPPORT (Type-A, 4 bytes)
The TCP/IP port number of the originating client or Telnet client. For more information, see field 369 (OCLIPORT) in the DFHCICS performance data group.

MNR_ID_ORIGIN_TRANFLAG (Type-A, 8 bytes)
The originating transaction flags. This 64-bit string is used for signaling transaction definition and status information. For more information, see field 370 (OTRANFLG) in the DFHCICS performance data group.

MNR_ID_ORIGIN_FCTYNAME (Type-C, 8 bytes)
The facility name of the originating transaction. If the originating transaction is not associated with a facility, this field is null. For more information, see field 371 (OFCTYNME) in the DFHCICS performance data group.

File entry fields

This section describes the fields in each file entry in a transaction resource monitoring record.

For information about transaction file accesses in performance class monitoring data, see “DFHFILE fields” on page 276.

MNR_FILE_NAME (Type-C, 8 bytes)
The CICS 8-character name of the file to which the following data fields refer.

MNR_FILE_GET (Type-S, 8 bytes)
The elapsed time that the user task waited for completion of GET requests issued by the user task for this file. The count part of this field (the low order 24 bits) contains the number of GET requests issued against the file. For more information, see “Transaction response time” on page 315 and “Clocks and time stamps” on page 313.

MNR_FILE_PUT (Type-S, 8 bytes)
The elapsed time that the user task waited for completion of PUT requests issued by the user task for this file. The count part of this field (the low order 24 bits) contains the number of PUT requests issued against the file. For more information, see “Transaction response time” on page 315 and “Clocks and time stamps” on page 313.

MNR_FILE_BRWSE (Type-S, 8 bytes)
The elapsed time that the user task waited for completion of BROWSE requests issued by the user task for this file. The count part of this field (the low order

24 bits) contains the number of BROWSE requests issued against the file. For more information, see “Transaction response time” on page 315 and “Clocks and time stamps” on page 313.

MNR_FILE_ADD (Type-S, 8 bytes)
The elapsed time that the user task waited for completion of ADD requests issued by the user task for this file. The count part of this field (the low order 24 bits) contains the number of ADD requests issued against the file. For more information, see “Transaction response time” on page 315 and “Clocks and time stamps” on page 313.

MNR_FILE_DEL (Type-S, 8 bytes)
The elapsed time that the user task waited for completion of DELETE requests issued by the user task for this file. The count part of this field (the low order 24 bits) contains the number of DELETE requests issued against the file. For more information, see “Transaction response time” on page 315 and “Clocks and time stamps” on page 313.

MNR_FILE_TOTAL (Type-S, 8 bytes)
The total elapsed time that the user task waited for completion of all requests issued by the user task for this file. The count part of this field (the low order 24 bits) contains the number of all requests issued against the file. For more information, see “Transaction response time” on page 315 and “Clocks and time stamps” on page 313.

MNR_FILE_AM_RQ (Type-A, 4 bytes)
Number of times the user task invoked file access-method interfaces. See also the performance class data field FCAMCT (owner: DFHFILE, field ID: 070).

MNR_FILE_IO_WT (Type-S, 8 bytes)
The total I/O wait time on this file. For more information, see “Transaction response time” on page 315 and “Clocks and time stamps” on page 313.

MNR_RLS_FILE_IO_WT (Type-S, 8 bytes)
Elapsed time in which the user task waited for RLS file I/O on this file. For more information, see “Transaction response time” on page 315 and “Clocks and time stamps” on page 313.

MNR_CFDT_IO_WT (Type-S, 8 bytes)
Elapsed time in which the user task waited for a data table access request to the coupling facility data table server to complete for this file. For more information, see “Transaction response time” on page 315 and “Clocks and time stamps” on page 313.

Temporary storage queue entry fields

This section describes the fields in each temporary storage queue entry in a transaction resource monitoring record.

For information about transaction temporary storage queue accesses in performance class monitoring data, see “DFHTEMP fields” on page 305.

MNR_TSQUEUE_NAME (Type-C, 16 bytes)
The CICS 16-character name of the temporary storage queue to which the following data fields refer.

MNR_TSQUEUE_GET (Type-S, 8 bytes)
The elapsed time that the user task waited for completion of GET requests issued by the user task for this temporary storage queue. The count part of this field (the low order 24 bits) contains the number of GET requests issued

against the temporary storage queue. For more information, see “Transaction response time” on page 315 and “Clocks and time stamps” on page 313.

MNR_TSQUEUE_PUT_AUX (Type-S, 8 bytes)
The elapsed time that the user task waited for completion of PUT requests to auxiliary temporary storage, issued by the user task for this temporary storage queue. The count part of this field (the low order 24 bits) contains the number of PUT requests to auxiliary temporary storage issued against the temporary storage queue. For more information, see “Transaction response time” on page 315 and “Clocks and time stamps” on page 313.

MNR_TSQUEUE_PUT_MAIN (Type-S, 8 bytes)
The elapsed time that the user task waited for completion of PUT requests to main temporary storage, issued by the user task for this temporary storage queue. The count part of this field (the low order 24 bits) contains the number of PUT requests to main temporary storage issued against the temporary storage queue. For more information, see “Transaction response time” on page 315 and “Clocks and time stamps” on page 313.

MNR_TSQUEUE_TOTAL (Type-S, 8 bytes)
The total elapsed time that the user task waited for completion of all requests issued by the user task for this temporary storage queue. The count part of this field (the low order 24 bits) contains the number of all requests issued against the temporary storage queue. For more information, see “Transaction response time” on page 315 and “Clocks and time stamps” on page 313.

MNR_TSQUEUE_GET_ITEML (Type-S, 4 bytes)
The total length of all items obtained from this temporary storage queue.

MNR_TSQUEUE_PUT_AUX_ITEML (Type-S, 4 bytes)
The total length of all items written to the auxiliary temporary storage queue.

MNR_TSQUEUE_PUT_MAIN_ITEML (Type-S, 4 bytes)
The total length of all items written to the main temporary storage queue.

MNR_TSQUEUE_IO_WT (Type-S, 8 bytes)
The total I/O wait time on this temporary storage queue. For more information, see “Transaction response time” on page 315 and “Clocks and time stamps” on page 313.

MNR_SHR_TSQUEUE_IO_WT (Type-S, 8 bytes)
The total I/O wait time on the shared temporary storage queue. For more information, see “Transaction response time” on page 315 and “Clocks and time stamps” on page 313.

DPL entry fields

This section describes the fields in each distributed program link entry in a transaction resource monitoring record.

For information about transaction program accesses in performance class monitoring data, see “DFHPROG fields” on page 278.

MNR_DPL_PROGRAM_NAME (Type-C, 8 bytes)
The name of the program to which the following data fields refer.

MNR_DPL_SYSID (Type-C, 4 bytes)
The name of the remote system to which this program was routed for the distributed program link.

MNR_DPL_LINK_REQS (Type-C, 4 bytes)
The number of distributed program link requests issued by the user task for this program and sysid combination.

Part 6. Reference

These topics contain cross-reference information designed to help you more easily use CICS PA and understand the data it is reporting. These topics contain three cross-reference tables that apply to CMF performance class and transaction resource class data:

- "CMF Field IDs by CICS version" contains a cross-reference table relating the CICS monitoring facility (CMF) fields with the corresponding CICS PA field names and CICS version.
- "CICS PA field names by CICS version" contains a cross-reference table relating the CICS PA field names with the corresponding CICS CMF fields and CICS version.
- "Fields by forms, HDB templates" contains a cross-reference table relating the CICS PA field names with the Report Forms and HDB Templates where they can be specified.

Chapter 15. CMF Field IDs by CICS version

The following cross-reference table relates the CICS monitoring facility (CMF) field IDs for performance class and transaction resource class data with the CICS versions to which they apply.

Some columns in the table require explanation:

CICS PA field name
The name used in report forms, HDB templates, and selection criteria (and the corresponding batch command operands FIELDS and SELECT):

- A blank value in this column indicates that the CICS PA field name is the same as the CMF field name.
- "N/A" indicates that the field is not available, typically because it is a very long field, or it is an unprintable field such as a unit-of-work or a flag.

Column heading
The heading used to identify the field in CICS PA reports and extract data sets.

CICS version
The CICS versions to which a field applies:

- Yes, the field applies to this CICS version
– No, the field does not apply to this CICS version

The table is sorted by CMF group and CMF field ID.

Note:

1. DBCTL fields can only be specified if the MCT contains the DBCTL EMP defined in SDFHSAMP member DFH$MCTD.
2. Some special fields, such as APPLID and RESPONSE, are not defined in the CMF Dictionary and are given a group name of "CICSPA". These fields are either derived from the fixed section of the CMF record (for example, APPLID), or calculated from two or more other CMF fields (for example, RESPONSE).
3. The FILENAME, TSQNAME, and DPLNAME fields are only available when CMF transaction resource class data is being collected.
4. The DFHAPPL fields are only available when application programs invoke the application naming event monitoring points.

Table 31. Cross-reference: CMF field ID × CICS version

CMF field						CICS version				
Group	Type	ID	Name	CICS PA field name	Column heading	640	650	660	670	Description
CICSPA	A	001	TOTRECS		TotlRecs	•	•	•	•	Cross-System Total record count
CICSPA	A	002	APPLRECS		APPLRecs	•	•	•	•	Cross-System Application records
CICSPA	A	003	TRANROUT		TranRout	•	•	•	•	Cross-System Transaction Routing records
CICSPA	A	004	FUNCSHIP		FuncShip	•	•	•	•	Cross-System Function Shipping records
CICSPA	A	005	DPLRECS		DPL Recs	•	•	•	•	Cross-System DPL records
CICSPA	D	901	RESP	RESPONSE	Response	•	•	•	•	Transaction response time
CICSPA	X	902	TASKCNT		#Tasks	•	•	•	•	Total Task count
CICSPA	C	903	APPLID		APPLID	•	•	•	•	CICS Generic APPLID

Table 31. Cross-reference: CMF field ID × CICS version (continued)

CMF field						CICS version				
Group	Type	ID	Name	CICS PA field name	Column heading	640	650	660	670	Description
CICSPA	C	904	MVSID		MVS ID	•	•	•	•	MVS SMF ID
CICSPA	C	905	JOBNAME		Jobname	•	•	•	•	Job Name
CICSPA	D	906	COMMWAIT		CommWait	•	•	•	•	Communications wait time
CICSPA	D	907	IOWAIT		I/O Wait	•	•	•	•	Total IO wait time
CICSPA	D	908	IRESP		Int Resp	•	•	•	•	Transaction internal response time
CICSPA	C	909	RELEASE		Rlse	•	•	•	•	CICS release
CICSPA	D	910	JVMMTIME		JVM Meth	•	•	•	•	JVM Method time
CICSPA	D	911	RMIOTIME		RMIOTime	•	•	•	•	Resource Manager Interface (RMI) other time
CICSPA	C	912	UOWID		UOW ID	•	•	•	•	Network UOW ID
CICSPA	C	913	UOWSEQ		UOW Seq	•	•	•	•	Network UOW Sequence Number
CICSPA	X	914	TASKTCNT		#TTasks	•	•	•	•	Total Task Termination count
CICSPA	A	915	ALERT		ALERT	•	•	•	•	Total Alert count or percentage
CICSPA	C	916	FILENAME		FileName	•	•	•	•	File name
CICSPA	C	917	TSQNAME		TSQ Name	•	•	•	•	Temporary Storage Queue Name
CICSPA	D	918	TOTCPU		Tot CPU	•	•	•	•	Total Task CPU Time
CICSPA	C	919	DPLNAME		DPL Name	•	•	•	•	Distributed program link name
CICSPA	D	920	OSLATNCY		OSLatncy	–	•	•	•	Task start latency since Origin task start
CICSPA	D	921	PHLATNCY		PHLatncy	–	–	–	•	Previous Hop latency time
DBCTL	C	001	PSBNAME		PSB Name	•	•	•	•	PSB Name
DBCTL	S	002	POOLWAIT		PoolWait	•	•	•	•	Elapsed wait time for Pool Space
DBCTL	S	003	INTCWAIT		IntCWait	•	•	•	•	Elapsed wait time for Intent Conflict
DBCTL	S	004	SCHTELAP		SchTElap	•	•	•	•	Elapsed time for Schedule Process
DBCTL	S	005	DBIOELAP		DBIOElap	•	•	•	•	Elapsed time for Database I/O
DBCTL	S	006	PILOCKEL		PILockEl	•	•	•	•	Elapsed time for PI Locking
DBCTL	A	007	DBIOCALL		DBIOCall	•	•	•	•	Number of Database I/Os
DBCTL	A	008	GUCALL		GUcall	•	•	•	•	Number of Database GU calls issued
DBCTL	A	009	GNCALL		GNcall	•	•	•	•	Number of Database GN calls issued
DBCTL	A	010	GNPCALL		GNPcall	•	•	•	•	Number of Database GNP calls issued
DBCTL	A	011	GHUCALL		GHUcall	•	•	•	•	Number of Database GHU calls issued
DBCTL	A	012	GHNCALL		GHNcall	•	•	•	•	Number of Database GHN calls issued
DBCTL	A	013	GHNPCALL		GHNPcall	•	•	•	•	Number of Database GHNP calls issued
DBCTL	A	014	ISRTCALL		ISRTcall	•	•	•	•	Number of Database ISRT calls issued
DBCTL	A	015	DLETCALL		DLETcall	•	•	•	•	Number of Database DLET calls issued
DBCTL	A	016	REPLCALL		REPLcall	•	•	•	•	Number of Database REPL calls issued
DBCTL	A	017	DLICALLS		DLIcalls	•	•	•	•	Total DL/I Database calls
DBCTL	A	018	TESTENQS		TestENQs	•	•	•	•	Number of Test Enqueues
DBCTL	A	019	TESTENQW		TestENQW	•	•	•	•	Number of waits on Test Enqueues
DBCTL	A	020	TESTDEQS		TestDEQs	•	•	•	•	Number of Test Dequeues
DBCTL	A	021	UPDTENQS		UpdtENQs	•	•	•	•	Number of Update Enqueues
DBCTL	A	022	UPDTENQW		UpdtENQW	•	•	•	•	Number of waits on Update Enqueues
DBCTL	A	023	UPDTDEQS		UpdtDEQs	•	•	•	•	Number of Update Dequeues
DBCTL	A	024	EXCLENQS		ExclENQs	•	•	•	•	Number of Exclusive Enqueues
DBCTL	A	025	EXCLENQW		ExclENQW	•	•	•	•	Number of waits on Exclusive Enqueues
DBCTL	A	026	EXCLDEQS		ExclDEQs	•	•	•	•	Number of Exclusive Dequeues
DBCTL	A	027	DEDBCALL		DEDBcall	•	•	•	•	Number of DEDB calls
DBCTL	A	028	DEDBRDOP		DEDBRdOp	•	•	•	•	Number of DEDB read operations
DBCTL	A	029	OVFLBFRU		OvflBfrU	•	•	•	•	Number of Overflow Buffers used
DBCTL	A	030	UOWCONTS		UOWConts	•	•	•	•	Number of UOW Contentions
DBCTL	A	031	DEDBBFRW		DEDBBfrW	•	•	•	•	Number of waits for DEDB buffers
DBCTL	S	032	THREDCPU		ThredCPU	•	•	•	•	Thread TCB CPU time
DBCTL	T	033	SCHEDSTA		SchedSta	•	•	•	•	IMS Schedule start time
DBCTL	T	034	SCHEDEND		SchedEnd	•	•	•	•	IMS Schedule end time
DBCTL	A	035	DBGETS		DBget	•	•	•	•	Number of Database Get calls issued
DBCTL	A	036	DBUPDATE		DBupdate	•	•	•	•	Number of Database Update calls issued
DBCTL	A	037	DBWAITS		DBwait	•	•	•	•	Number of Database waits
DFHAPPL	C	001	APPLNAME	APPLPROG	Program	•	•	•	•	Application naming Program

Table 31. Cross-reference: CMF field ID × CICS version (continued)

CMF field						CICS version				
Group	Type	ID	Name	CICS PA field name	Column heading	640	650	660	670	Description
DFHAPPL	C	001	APPLNAME	APPLTRAN	Tran	•	•	•	•	Application naming Tran ID
DFHCBTS	C	200	PRCSNAME		BTS Proc	•	•	•	•	BTS Process name
DFHCBTS	C	201	PRCSTYPE		BTS PTyp	•	•	•	•	BTS Process type
DFHCBTS	C	202	PRCSID	N/A	BTS Root	•	•	•	•	BTS Root Activity identifier
DFHCBTS	C	203	ACTVTYID	N/A	BTSActID	•	•	•	•	BTS Activity identifier
DFHCBTS	C	204	ACTVTYNM		BTSActNm	•	•	•	•	BTS Activity name
DFHCBTS	A	205	BARSYNCT		BTS Sync	•	•	•	•	BTS synchronous Process/Activity count
DFHCBTS	A	206	BARASYCT		BTS Asyn	•	•	•	•	BTS asynchronous Process/Activity count
DFHCBTS	A	207	BALKPACT		BTS Link	•	•	•	•	BTS Link Process/Activity count
DFHCBTS	A	208	BADPROCT		BTS DefP	•	•	•	•	BTS Define Process requests
DFHCBTS	A	209	BADACTCT		BTS DefA	•	•	•	•	BTS Define Activity requests
DFHCBTS	A	210	BARSPACT		BTSReset	•	•	•	•	BTS Reset Process/Activity requests
DFHCBTS	A	211	BASUPACT		BTS Susp	•	•	•	•	BTS Suspend Process/Activity requests
DFHCBTS	A	212	BARMPACT		BTSResum	•	•	•	•	BTS Resume Process/Activity requests
DFHCBTS	A	213	BADCPACT		BTSCancl	•	•	•	•	BTS Cancel Process/Activity requests
DFHCBTS	A	214	BAACQPCT		BTSAcqui	•	•	•	•	BTS Acquire Process/Activity requests
DFHCBTS	A	215	BATOTPCT		BTSTotal	•	•	•	•	BTS Total Process/Activity requests
DFHCBTS	A	216	BAPRDCCT		BTSPDCRq	•	•	•	•	BTS Process Data Containers requests
DFHCBTS	A	217	BAACDCCT		BTSADCRq	•	•	•	•	BTS Activity Data Containers requests
DFHCBTS	A	218	BATOTCCT		BTSTDCRq	•	•	•	•	BTS Process/Activity Data Container requests
DFHCBTS	A	219	BARATECT		BTSRtvEv	•	•	•	•	BTS Retrieve-Reattach Event requests
DFHCBTS	A	220	BADFIECT		BTSDefEv	•	•	•	•	BTS Define-Input Event requests
DFHCBTS	A	221	BATIAECT		BTSTimEv	•	•	•	•	BTS TIMER Event requests
DFHCBTS	A	222	BATOTECT		BTSTotEv	•	•	•	•	BTS Event-related requests
DFHCHNL	A	321	PGTOTCCT		PGTOTCCT	•	•	•	•	Total number of CHANNEL CONTAINER requests
DFHCHNL	A	322	PGBRWCCT		PGBRWCCT	•	•	•	•	BROWSE CHANNEL CONTAINER requests
DFHCHNL	A	323	PGGETCCT		PGGETCCT	•	•	•	•	GET CHANNEL CONTAINER requests
DFHCHNL	A	324	PGPUTCCT		PGPUTCCT	•	•	•	•	PUT CHANNEL CONTAINER requests
DFHCHNL	A	325	PGMOVCCT		PGMOVCCT	•	•	•	•	MOVE CHANNEL CONTAINER requests
DFHCHNL	A	326	PGGETCDL		PGGETCDL	•	•	•	•	GET CHANNEL CONTAINER data length
DFHCHNL	A	327	PGPUTCDL		PGPUTCDL	•	•	•	•	PUT CHANNEL CONTAINER data length
DFHCHNL	A	328	PGCRECCT		PGCRECCT	•	•	•	•	Number of Containers created
DFHCHNL	A	329	PGCSTHWM		PGCSTHWM	–	•	•	•	Maximum Container Storage allocated to task
DFHCICS	T	005	START		Start	•	•	•	•	Task start time
DFHCICS	T	006	STOP		Stop	•	•	•	•	Task stop time
DFHCICS	A	025	CFCAPICT		CFClsAPI	•	•	•	•	OO Foundation Class requests
DFHCICS	C	089	USERID		Userid	•	•	•	•	User ID
DFHCICS	S	103	EXWTTIME	EXWAIT	Exc Wait	•	•	•	•	Exception Conditions wait time
DFHCICS	C	112	RTYPE		RTyp	•	•	•	•	Performance record type
DFHCICS	C	130	RSYSID		RSID	•	•	•	•	Remote System ID
DFHCICS	A	131	PERRECNT	RECCOUNT	RecCount	•	•	•	•	Task Performance record count
DFHCICS	C	167	SRVCLASS		SrvClass	•	•	•	•	WLM Service Class
DFHCICS	C	168	RPTCLASS		RptClass	•	•	•	•	WLM Report Class
DFHCICS	C	351	OADID		OADID	–	–	–	•	Originating Adapter Identifier
DFHCICS	C	352	OADATA1		OAData1	–	–	–	•	Originating Adapter data 1
DFHCICS	C	353	OADATA2		OAData2	–	–	–	•	Originating Adapter data 2
DFHCICS	C	354	OADATA3		OAData3	–	–	–	•	Originating Adapter data 3
DFHCICS	C	359	ONETWKID		ONETWKID	–	•	•	•	Originating Network ID
DFHCICS	C	360	OAPPLID		OAPPLID	–	•	•	•	Originating CICS APPLID
DFHCICS	T	361	OSTART		OStart	–	•	•	•	Originating Task start time
DFHCICS	P	362	OTRANNUM	OTASKNO	OTaskNo	–	•	•	•	Originating Transaction number
DFHCICS	C	363	OTRAN		OTran	–	•	•	•	Originating Transaction identifier
DFHCICS	C	364	OUSERID		OUserid	–	•	•	•	Originating User ID
DFHCICS	C	365	OUSERCOR		OUserCor	–	•	•	•	Originating User Correlator
DFHCICS	C	366	OTCPSVCE	OTCPSRVC	OTCPIPSr	–	•	•	•	Originating TCP/IP Service Name

Table 31. Cross-reference: CMF field ID × CICS version (continued)

CMF field						CICS version				
Group	Type	ID	Name	CICS PA field name	Column heading	640	650	660	670	Description
DFHCICS	A	367	OPORTNUM	OPORT	OPORT	–	•	•	•	Originating TCP/IP Port Number
DFHCICS	C	368	OCLIPADR	OCLINTIP	OClintIP	–	•	–	–	Originating Client or Telnet IP address
DFHCICS	A	369	OCLIPORT		OCLIPORT	–	•	•	•	Originating Client IP Port Number
DFHCICS	A	370	OTRANFLG		OTranFlg	–	•	•	•	Originating Transaction flags
DFHCICS	A	370	OTRANFLG	OFCTYTYP	OFctyTyp	–	•	•	•	Originating Transaction Facility Type
DFHCICS	C	370	OTRANFLG	OORIGIN	OOrigin	–	•	•	•	Originating Transaction Origin type
DFHCICS	C	370	OTRANFLG	OTRANTYP	OTranTyp	–	•	•	•	Originating Transaction type
DFHCICS	C	371	OFCTYNME	OFCTY	OFcty	–	•	•	•	Originating Transaction Facility name
DFHCICS	C	372	OCLIPADR	OCLI6ADR	OCli6Adr	–	–	•	•	Originating Client or Telnet IP address
DFHCICS	C	373	PHNTWKID		PHNTWKID	–	–	–	•	Previous Hop Data Network ID
DFHCICS	C	374	PHAPPLID		PHAPPLID	–	–	–	•	Previous Hop Data APPLID
DFHCICS	T	375	PHSTART		PHStart	–	–	–	•	Previous Hop Data Task Start
DFHCICS	P	376	PHTRANNO	PHTASKNO	PHTaskNo	–	–	–	•	Previous Hop Data Transaction Number
DFHCICS	C	377	PHTRAN		PHTran	–	–	–	•	Previous Hop Data Transaction ID
DFHCICS	A	378	PHCOUNT		PHCount	–	–	–	•	Previous Hop Data Count
DFHCICS	A	402	EICTOTCT		EICTotCt	–	–	•	•	EXEC CICS requests
DFHCICS	A	405	TIASKTCT		ASKTimCt	–	–	•	•	ASKTIME requests
DFHCICS	A	406	TITOTCT		TITOTcT	–	–	•	•	ASKTIME
DFHCICS	A	408	BFDGSTCT		BFDGSTcT	–	–	•	•	Built-in function BIF DIGEST requests
DFHCICS	A	409	BFTOTCT		BFTotCt	–	–	•	•	Total Built-in (BIF) function requests
DFHCICS	A	415	ECSIGECT		ECSIGECT	–	–	•	•	SIGNAL EVENT requests
DFHCICS	A	416	ECEFOPCT		ECEFOPCT	–	–	•	•	Event Filter operations
DFHCICS	A	417	ECEVNTCT		ECEVNTCT	–	–	•	•	Events captured
DFHCICS	A	418	ECSEVCCT		ECSEVCCT	–	–	–	•	Synchronous Emission Events captured
DFHDATA	A	179	IMSREQCT		IMS Reqs	•	•	•	•	IMS (DBCTL) requests
DFHDATA	A	180	DB2REQCT		DB2 Reqs	•	•	•	•	DB2 requests
DFHDATA	S	186	IMSWAIT		IMS Wait	•	•	•	•	IMS (DBCTL) wait time
DFHDATA	S	187	DB2RDYQW		DB2ThdWt	•	•	•	•	DB2 Thread wait time
DFHDATA	S	188	DB2CONWT		DB2ConWt	•	•	•	•	DB2 Connection wait time
DFHDATA	S	189	DB2WAIT		DB2SQLWt	•	•	•	•	DB2 SQL/IFI wait time
DFHDATA	A	395	WMQREQCT		WMQ Reqs	–	•	•	•	Number of WebSphere MQ requests
DFHDATA	S	396	WMQGETWT		WMQGetWt	–	•	•	•	WebSphere MQ GETWAIT wait time
DFHDATA	S	397	WMQASRBT		WMQSRBtm	–	–	•	•	WebSphere MQ API SRB CPU time
DFHDEST	A	041	TDGETCT	TDGET	TDGET	•	•	•	•	Transient data GET requests
DFHDEST	A	042	TDPUTCT	TDPUT	TDPUT	•	•	•	•	Transient data PUT requests
DFHDEST	A	043	TDPURCT	TDPURGE	TDPURGE	•	•	•	•	Transient data PURGE requests
DFHDEST	A	091	TDTOTCT	TDTOTAL	TD Total	•	•	•	•	Transient data Total requests
DFHDEST	S	101	TDIOWTT	TDWAIT	TD Wait	•	•	•	•	VSAM transient data I/O wait time
DFHDOCH	A	223	DHDELCT	DHDELETE	DHDELETE	–	•	•	•	Document Handler DELETE requests
DFHDOCH	A	226	DHCRECT	DHCREATE	DHCREATE	•	•	•	•	Document Handler CREATE requests
DFHDOCH	A	227	DHINSCT	DHINSERT	DHINSERT	•	•	•	•	Document Handler INSERT requests
DFHDOCH	A	228	DHSETCT	DHSET	DHSET	•	•	•	•	Document Handler SET requests
DFHDOCH	A	229	DHRETCT	DHRETRVE	DHRETRVE	•	•	•	•	Document Handler RETRIEVE requests
DFHDOCH	A	230	DHTOTCT	DHTOTAL	DH Total	•	•	•	•	Document Handler Total requests
DFHDOCH	A	240	DHTOTDCL		DHDocLen	•	•	•	•	Total length of all documents created
DFHEJBS	C	311	CBSRVRNM		Corb	•	•	•	•	CorbaServer name
DFHEJBS	A	312	EJBSACCT	EJBACTIV	EJBActiv	•	•	•	•	Number of Bean State Activation requests
DFHEJBS	A	313	EJBSPACT	EJBPASIV	EJBPasiv	•	•	•	•	Number of Bean State Passivation requests
DFHEJBS	A	314	EJBCRECT	EJBCREAT	EJBCreat	•	•	•	•	Number of Bean Creation requests
DFHEJBS	A	315	EJBREMCT	EJBREMOV	EJBRemov	•	•	•	•	Number of Bean Removal requests
DFHEJBS	A	316	EJBMTHCT	EJBMETHD	EJBMethd	•	•	•	•	Number of EJB Method Calls
DFHEJBS	A	317	EJBTOTCT	EJBTOTAL	EJBTotal	•	•	•	•	Total Number of EJB requests
DFHFEPI	A	150	SZALLOCT	SZALLOC	SZALLOC	•	•	•	•	Conversations allocated count
DFHFEPI	A	151	SZRCVCT	SZRCV	SZRCV	•	•	•	•	FEPI RECEIVE requests
DFHFEPI	A	152	SZSENDCT	SZSEND	SZSEND	•	•	•	•	FEPI SEND requests
DFHFEPI	A	153	SZSTRTCT	SZSTART	SZSTART	•	•	•	•	FEPI START requests

Table 31. Cross-reference: CMF field ID × CICS version (continued)

CMF field						CICS version				
Group	Type	ID	Name	CICS PA field name	Column heading	640	650	660	670	Description
DFHFEPI	A	154	SZCHROUT		SZChrOut	•	•	•	•	FEPI characters sent count
DFHFEPI	A	155	SZCHRIN		SZChrIn	•	•	•	•	FEPI characters received count
DFHFEPI	S	156	SZWAIT		SZ Wait	•	•	•	•	FEPI services wait time
DFHFEPI	A	157	SZALLCTO		SZAlocTO	•	•	•	•	Allocate conversation time-out count
DFHFEPI	A	158	SZRCVTO		SZRecvTO	•	•	•	•	Receive Data time-out count
DFHFEPI	A	159	SZTOTCT	SZTOTAL	SZ Total	•	•	•	•	FEPI API and SPI requests
DFHFILE	A	036	FCGETCT	FCGET	FCGET	•	•	•	•	File GET requests
DFHFILE	A	037	FCPUTCT	FCPUT	FCPUT	•	•	•	•	File PUT requests
DFHFILE	A	038	FCBRWCT	FCBROWSE	FCBROWSE	•	•	•	•	File Browse requests
DFHFILE	A	039	FCADDCT	FCADD	FCADD	•	•	•	•	File ADD requests
DFHFILE	A	040	FCDELCT	FCDELETE	FCDELETE	•	•	•	•	File DELETE requests
DFHFILE	S	063	FCIOWTT	FCWAIT	FC Wait	•	•	•	•	File I/O wait time
DFHFILE	A	070	FCAMCT		FCAMRq	•	•	•	•	File access-method requests
DFHFILE	A	093	FCTOTCT	FCTOTAL	FC Total	•	•	•	•	File Control requests
DFHFILE	S	174	RLSWAIT		RLS Wait	•	•	•	•	RLS File I/O wait time
DFHFILE	S	175	RLSCPUT	RLSCPU	RLS CPU	•	•	•	•	RLS File Request CPU (SRB) time
DFHFILE	S	176	CFDTWAIT		CFDTWait	•	•	•	•	CF Data Table access requests wait time
DFHJOUR	S	010	JCIOWTT	JCWAIT	JC Wait	•	•	•	•	Journal I/O wait time
DFHJOUR	A	058	JNLWRTCT	JNLPUT	JnlWrite	•	•	•	•	Journal write requests
DFHJOUR	A	172	LOGWRTCT	LOGWRITE	LogWrite	•	•	•	•	Log Stream write requests
DFHMAPP	A	050	BMSMAPCT	BMSMAP	BMSMAP	•	•	•	•	BMS MAP requests
DFHMAPP	A	051	BMSINCT	BMSIN	BMSIN	•	•	•	•	BMS IN requests
DFHMAPP	A	052	BMSOUTCT	BMSOUT	BMSOUT	•	•	•	•	BMS OUT requests
DFHMAPP	A	090	BMSTOTCT	BMSTOTAL	BMSTotal	•	•	•	•	BMS Total requests
DFHPROG	A	055	PCLINKCT	PCLINK	PCLINK	•	•	•	•	Program LINK requests
DFHPROG	A	056	PCXCTLCT	PCXCTL	PCXCTL	•	•	•	•	Program XCTL requests
DFHPROG	A	057	PCLOADCT	PCLOAD	PCLOAD	•	•	•	•	Program LOAD requests
DFHPROG	C	071	PGMNAME	PROGRAM	Program	•	•	•	•	Program name
DFHPROG	A	072	PCLURMCT	PCLURM	PCLNKURM	•	•	•	•	Program LINK URM requests
DFHPROG	A	073	PCDPLCT	PCDPL	PCDPLINK	•	•	•	•	Distributed Program Link (DPL) requests
DFHPROG	C	113	ABCODEO		ABor	•	•	•	•	Original ABEND Code
DFHPROG	C	114	ABCODEC		ABcu	•	•	•	•	Current ABEND code
DFHPROG	S	115	PCLOADTM		PCLOADWt	•	•	•	•	Program Library wait time
DFHPROG	A	286	PCDLCSDL		PCDLCSDL	•	•	•	•	Container data length for DPL reqs with CHANNEL
DFHPROG	A	287	PCDLCRDL		PCDLCRDL	•	•	•	•	Container data length for DPL RETURN w/ CHANNEL
DFHPROG	A	306	PCLNKCCT		PCLNKCCT	•	•	•	•	LINK requests with CHANNEL option
DFHPROG	A	307	PCXCLCCT		PCXCLCCT	•	•	•	•	XCTL requests with CHANNEL option
DFHPROG	A	308	PCDPLCCT		PCDPLCCT	•	•	•	•	DPL requests with CHANNEL option
DFHPROG	A	309	PCRTNCCT		PCRTNCCT	•	•	•	•	Program RETURN requests with CHANNEL option
DFHPROG	A	310	PCRTNCDL		PCRTNCDL	•	•	•	•	Container data length for RETURN with CHANNEL
DFHRMI	S	001	RMITOTAL		RMITotal	•	•	•	•	RMI total elapsed time
DFHRMI	S	002	RMIOTHER		RMI Othr	•	•	•	•	RMI other elapsed time
DFHRMI	S	003	RMIDB2		RMI DB2	•	•	•	•	RMI elapsed time for DB2 requests
DFHRMI	S	004	RMIDBCTL		RMIDBCTL	•	•	•	•	RMI elapsed time for DBCTL requests
DFHRMI	S	005	RMIEXDLI		RMIEXDLI	•	•	•	•	RMI elapsed time for EXEC DLI requests
DFHRMI	S	006	RMIMQM		RMI MQ	•	•	•	•	RMI elapsed time for WebSphere MQ requests
DFHRMI	S	007	RMICPSM		RMI CPSM	•	•	•	•	RMI elapsed time for CICSPlex SM requests
DFHRMI	S	008	RMITCPIP		RMITCPIP	•	•	•	•	RMI elapsed time for TCP/IP socket requests
DFHSOCK	S	241	SOIOWTT	SOWAIT	SockWait	•	•	•	•	Inbound Socket I/O wait time
DFHSOCK	A	242	SOBYENCT		SockEcry	•	•	•	•	Secure Socket bytes encrypted count
DFHSOCK	A	243	SOBYDECT		SockDcry	•	•	•	•	Secure Socket bytes decrypted count
DFHSOCK	C	244	CLIPADDR	CLIENTIP	ClientIP	•	•	–	–	Client or Telnet IP address
DFHSOCK	C	245	TCPSRVCE		TCPIPSrv	•	•	•	•	TCP/IP Service Name

Table 31. Cross-reference: CMF field ID × CICS version (continued)

CMF field						CICS version				
Group	Type	ID	Name	CICS PA field name	Column heading	640	650	660	670	Description
DFHSOCK	A	246	PORTNUM	PORT	PORT	•	•	•	•	TCP/IP Port Number
DFHSOCK	A	288	ISALLOCT	ISALLOC	ISALLOC	–	•	•	•	Allocate Session requests for sessions on IP
DFHSOCK	A	289	SOEXTRCT		SOEXTRAC	•	•	•	•	EXTRACT TCP/IP and CERTIFICATE requests
DFHSOCK	A	290	SOCNPSCT		SOCNPSRq	•	•	•	•	Create Non-Persistent Outbound Socket reqs
DFHSOCK	A	291	SOCPSCT		SOCPSReq	•	•	•	•	Create Persistent Outbound Socket requests
DFHSOCK	A	292	SONPSHWM		SONPSHWM	•	•	•	•	Non-Persistent Outbound Socket HWM
DFHSOCK	A	293	SOPSHWM		SOPSHWM	•	•	•	•	Persistent Outbound Socket HWM
DFHSOCK	A	294	SORCVCT	SORCV	SO Recv	•	•	•	•	Outbound Sockets RECEIVE requests
DFHSOCK	A	295	SOCHRIN		SOChrIn	•	•	•	•	Outbound Sockets characters received count
DFHSOCK	A	296	SOSENDCT	SOSEND	SO SEND	•	•	•	•	Outbound Sockets SEND requests
DFHSOCK	A	297	SOCHROUT		SOChrOut	•	•	•	•	Outbound Sockets characters sent count
DFHSOCK	A	298	SOTOTCT	SOTOTAL	SOTotal	•	•	•	•	Socket Total requests
DFHSOCK	S	299	SOOIOWTT	OSOWAIT	OSO Wait	•	•	•	•	Outbound Socket I/O Wait Time
DFHSOCK	S	300	ISIOWTT	ISWAIT	IS Wait	–	•	•	•	IPCONN link wait time
DFHSOCK	A	301	SOMSGIN1		SOMsgIn1	•	•	•	•	Inbound Sockets RECEIVE requests
DFHSOCK	A	302	SOCHRIN1		SOChrIn1	•	•	•	•	Inbound Sockets characters received count
DFHSOCK	A	303	SOMSGOU1		SOMsgOu1	•	•	•	•	Inbound Sockets SEND requests
DFHSOCK	A	304	SOCHROU1		SOChrOu1	•	•	•	•	Inbound Sockets characters sent count
DFHSOCK	C	305	ISIPCNNM	ISIPICNM	ISIPICNM	–	•	•	•	Name of IPCONN definition that attached the task
DFHSOCK	C	318	CLIPADDR	CLIP6ADR	Clip6Adr	–	–	•	•	Client or Telnet IP address
DFHSOCK	A	330	CLIPPORT		CLIPPORT	–	•	•	•	Client IP Port Number
DFHSTOR	A	033	SCUSRHWM	SC24UHWM	SC24UHWM	•	•	•	•	UDSA HWM below 16MB
DFHSTOR	A	054	SCUGETCT	SC24UGET	SC24UGet	•	•	•	•	UDSA GETMAINs below 16MB
DFHSTOR	A	087	PCSTGHWM		PCStgHWM	•	•	•	•	Program Storage HWM above and below 16MB
DFHSTOR	A	095	SCUSRSTG	SC24UOCC	SC24UOcc	•	•	•	•	UDSA Storage Occupancy below 16MB
DFHSTOR	A	105	SCUGETCT	SC31UGET	SC31UGet	•	•	•	•	EUDSA GETMAINs above 16MB
DFHSTOR	A	106	SCUSRHWM	SC31UHWM	SC31UHWM	•	•	•	•	EUDSA HWM above 16MB
DFHSTOR	A	107	SCUCRSTG	SC31UOCC	SC31UOcc	•	•	•	•	EUDSA Storage Occupancy above 16MB
DFHSTOR	A	108	PC24BHWM		PC24bHWM	•	•	•	•	Program Storage HWM below 16MB
DFHSTOR	A	116	SC24CHWM		SC24CHWM	•	•	•	•	CDSA HWM below 16MB
DFHSTOR	A	117	SCCGETCT	SC24CGET	SC24CGet	•	•	•	•	CDSA GETMAINs below 16MB
DFHSTOR	A	118	SC24COCC		SC24COcc	•	•	•	•	CDSA Storage Occupancy below 16MB
DFHSTOR	A	119	SC31CHWM		SC31CHWM	•	•	•	•	ECDSA HWM above 16MB
DFHSTOR	A	120	SCCGETCT	SC31CGET	SC31CGet	•	•	•	•	ECDSA GETMAINs above 16MB
DFHSTOR	A	121	SC31COCC		SC31COcc	•	•	•	•	ECDSA Storage Occupancy above 16MB
DFHSTOR	A	122	PC31RHWM		PC31RHWM	•	•	•	•	Program Storage (ERDSA) HWM above 16MB
DFHSTOR	A	139	PC31AHWM		PC31aHWM	•	•	•	•	Program Storage HWM above 16MB
DFHSTOR	A	142	PC31CHWM		PC31CHWM	•	•	•	•	Program Storage (ECDSA) HWM above 16MB
DFHSTOR	A	143	PC24CHWM		PC24CHWM	•	•	•	•	Program Storage (CDSA) HWM below 16MB
DFHSTOR	A	144	SC24SGCT	SC24SGET	SC24SGet	•	•	•	•	CDSA/SDSA GETMAINs below 16MB
DFHSTOR	A	145	SC24GSHR		SC24GShr	•	•	•	•	CDSA/SDSA storage GETMAINed below 16MB
DFHSTOR	A	146	SC24FSHR		SC24FShr	•	•	•	•	CDSA/SDSA storage FREEMAINed below 16MB
DFHSTOR	A	147	SC31SGCT	SC31SGET	SC31SGet	•	•	•	•	ECDSA/ESDSA GETMAINs above 16MB
DFHSTOR	A	148	SC31GSHR		SC31GShr	•	•	•	•	ECDSA/ESDSA storage GETMAINed above 16MB
DFHSTOR	A	149	SC31FSHR		SC31FShr	•	•	•	•	ECDSA/ESDSA storage FREEMAINed above 16MB
DFHSTOR	A	160	PC24SHWM		PC24SHWM	•	•	•	•	Program Storage (SDSA) HWM below 16MB
DFHSTOR	A	161	PC31SHWM		PC31SHWM	•	•	•	•	Program Storage (ESDSA) HWM above 16MB
DFHSTOR	A	162	PC24RHWM		PC24RHWM	•	•	•	•	Program Storage (RDSA) HWM below 16MB
DFHSYNC	A	060	SPSYNCCT	SYNCPT	SYNCPT	•	•	•	•	SYNCPOINT requests
DFHSYNC	S	173	SYNCTIME		SYNCProc	•	•	•	•	SYNCPOINT processing time
DFHSYNC	S	177	SRVSYWTT	CFDTSYNC	CFDTSync	•	•	•	•	CF Data Table syncpoint wait time
DFHSYNC	S	196	SYNCDLY		SYNC Dly	•	•	•	•	SYNCPOINT parent request wait time
DFHSYNC	S	199	OTSINDWT		OTSIndWt	•	•	•	•	OTS Indoubt Wait time
DFHTASK	C	001	TRAN		Tran	•	•	•	•	Transaction identifier
DFHTASK	C	004	TTYPE	STYPE	SC	•	•	•	•	Transaction start type

Table 31. Cross-reference: CMF field ID × CICS version (continued)

CMF field						CICS version				
Group	Type	ID	Name	CICS PA field name	Column heading	640	650	660	670	Description
DFHTASK	S	007	USRDISPT	DISPATCH	Dispatch	•	•	•	•	Dispatch time
DFHTASK	S	008	USRCPUT	CPU	User CPU	•	•	•	•	CPU time
DFHTASK	S	014	SUSPTIME	SUSPEND	Suspend	•	•	•	•	Suspend time
DFHTASK	P	031	TRANNUM	TASKNO	TaskNo	•	•	•	•	Transaction identification number
DFHTASK	A	059	ICPUINCT	ICPUT	ICSTART	•	•	•	•	Interval Control START or INITIATE requests
DFHTASK	A	064	TASKFLAG	ERRFLAGS	Err Flag	•	•	•	•	Task error flags
DFHTASK	C	064	TASKFLAG	N/A	Err Flag	•	•	•	•	Task error flags
DFHTASK	A	065	ICSTACCT		ICSTACCT	•	•	•	•	Local IC START requests with CHANNEL option
DFHTASK	A	066	ICTOTCT	ICTOTAL	IC Total	•	•	•	•	Interval Control requests
DFHTASK	C	082	TRNGRPID		Group ID	•	•	•	•	Transaction Group ID
DFHTASK	C	097	NETUOWPX	NETNAME	NETName	•	•	•	•	Originating System VTAM network name
DFHTASK	C	098	NETUOWSX		NETUOWID	•	•	•	•	Network UOW ID
DFHTASK	S	102	DISPWTT	DISPWAIT	DispWait	•	•	•	•	Redispatch wait time
DFHTASK	A	109	TRANPRI	TRANPRTY	Prty	•	•	•	•	Transaction priority
DFHTASK	S	123	GNQDELAY		GNQDelay	•	•	•	•	Global Enqueue wait time
DFHTASK	C	124	BRDGTRAN		Brdg	•	•	•	•	Bridge Listener Transaction ID
DFHTASK	S	125	DSPDELAY		Disp1Dly	•	•	•	•	First dispatch wait time
DFHTASK	S	126	TCLDELAY		TCLDelay	•	•	•	•	First dispatch TCLSNAME wait time
DFHTASK	S	127	MXTDELAY		MXTDelay	•	•	•	•	First dispatch MXT wait time
DFHTASK	S	128	LMDELAY	LOCKDLAY	LM Delay	•	•	•	•	Lock Manager (LM) wait time
DFHTASK	S	129	ENQDELAY		ENQDelay	•	•	•	•	Local Enqueue wait time
DFHTASK	C	132	RMUOWID	N/A	RM UOWID	•	•	•	•	Recovery UOW ID
DFHTASK	C	163	FCTYNAME	FCTY	Fcty	•	•	•	•	Transaction Facility name
DFHTASK	A	164	TRANFLAG		TranFlag	•	•	•	•	Transaction flags
DFHTASK	A	164	TRANFLAG	FCTYTYPE	FctyType	•	•	•	•	Transaction facility type
DFHTASK	C	164	TRANFLAG	ORIGIN	Origin	•	•	•	•	Transaction origin type
DFHTASK	C	164	TRANFLAG	TRANTYPE	TranType	•	•	•	•	Transaction type
DFHTASK	C	166	TCLSNAME	TCLASSNM	TCLSName	•	•	•	•	Transaction Class name
DFHTASK	S	170	RMITIME		RMI Elap	•	•	•	•	Resource Manager Interface (RMI) elapsed time
DFHTASK	S	171	RMISUSP		RMI Susp	•	•	•	•	Resource Manager Interface (RMI) suspend time
DFHTASK	S	181	WTEXWAIT	WAITEXT	Ext Wait	•	•	•	•	External ECB wait time
DFHTASK	S	182	WTCEWAIT	WAITCICS	CICSWait	•	•	•	•	CICS ECB wait time
DFHTASK	S	183	ICDELAY		IC Delay	•	•	•	•	Interval Control (IC) wait time
DFHTASK	S	184	GVUPWAIT	GIVEUPWT	GiveUpWt	•	•	•	•	Give up control wait time
DFHTASK	C	190	RRMSURID	N/A	RRMSURID	•	•	•	•	RRMS/MVS unit-of-recovery ID (URID)
DFHTASK	S	191	RRMSWAIT		RRMSWait	•	•	•	•	Resource Recovery Services indoubt wait time
DFHTASK	S	192	RQRWAIT		RQR Wait	•	•	•	•	Request Receiver Wait Time
DFHTASK	S	193	RQPWAIT		RQP Wait	•	•	•	•	Request Processor Wait Time
DFHTASK	C	194	OTSTID	OTSID	OTS ID	•	•	•	•	OTS Transaction ID
DFHTASK	S	195	RUNTRWTT		BTSRunWt	•	•	•	•	BTS run Process/Activity wait time
DFHTASK	S	247	DSCHMDLY		DSCHMDLY	•	•	•	•	Redispatch wait time caused by change-TCB mode
DFHTASK	S	249	QRMODDLY		QRModDly	•	•	•	•	CICS QR TCB redispatch wait time
DFHTASK	S	250	MXTOTDLY	MAXOTDLY	MaxOTDly	•	•	•	•	Maximum Open TCB delay time
DFHTASK	A	251	TCBATTCT		TCBAtach	•	•	•	•	TCBs attached count
DFHTASK	A	252	DSTCBHWM		DSTCBHWM	•	•	•	•	CICS Dispatcher TCB HWM
DFHTASK	S	253	JVMTIME		JVM Elap	•	•	•	•	JVM elapsed time
DFHTASK	S	254	JVMSUSP		JVM Susp	•	•	•	•	JVM suspend time
DFHTASK	S	255	QRDISPT		QR Disp	•	•	•	•	CICS QR TCB dispatch time
DFHTASK	S	256	QRCPUT	QRCPU	QR CPU	•	•	•	•	CICS QR TCB CPU time
DFHTASK	S	257	MSDISPT		MS Disp	•	•	•	•	CICS TCBs dispatch time
DFHTASK	S	258	MSCPUT	MSCPU	MS CPU	•	•	•	•	CICS TCBs CPU time
DFHTASK	S	259	L8CPUT	L8CPU	L8 CPU	•	•	•	•	CICS L8 TCB CPU time
DFHTASK	S	260	J8CPUT	J8CPU	J8 CPU	•	•	•	•	CICS J8 TCB CPU time
DFHTASK	S	261	S8CPUT	S8CPU	S8 CPU	•	•	•	•	CICS S8 TCB CPU time
DFHTASK	S	262	KY8DISPT		KY8 Disp	•	•	•	•	CICS Key 8 TCB dispatch time
DFHTASK	S	263	KY8CPUT	KY8CPU	KY8 CPU	•	•	•	•	CICS Key 8 TCB CPU time

Table 31. Cross-reference: CMF field ID × CICS version (continued)

CMF field						CICS version				
Group	Type	ID	Name	CICS PA field name	Column heading	640	650	660	670	Description
DFHTASK	S	264	KY9DISPT		KY9 Disp	•	•	•	•	User task Key 9 Mode Dispatch time
DFHTASK	S	265	KY9CPUT	KY9CPU	KY9 CPU	•	•	•	•	User task Key 9 Mode CPU time
DFHTASK	S	266	L9CPUT	L9CPU	L9 CPU	•	•	•	•	User task L9 CPU time
DFHTASK	S	267	J9CPUT	J9CPU	J9 CPU	•	•	•	•	User task J9 Mode CPU time
DFHTASK	S	268	DSTCBMWT		DSTCBMWT	•	•	•	•	Dispatcher TCB Mismatch wait time
DFHTASK	S	269	RODISPT		RO Disp	•	•	•	•	CICS RO TCB dispatch time
DFHTASK	S	270	ROCPUT	ROCPU	RO CPU	•	•	•	•	CICS RO TCB CPU time
DFHTASK	S	271	X8CPUT	X8CPU	X8 CPU	•	•	•	•	CICS X8 TCB CPU time
DFHTASK	S	272	X9CPUT	X9CPU	X9 CPU	•	•	•	•	User task X9 Mode CPU time
DFHTASK	S	273	JVMITIME		JVMITime	•	•	•	•	JVM initialize elapsed time
DFHTASK	S	275	JVMRTIME		JVMRTime	•	•	•	•	JVM reset elapsed time
DFHTASK	S	277	MAXJTDLY		MaxJTDly	•	•	•	•	Maximum JVM TCB delay time
DFHTASK	S	278	MAXHTDLY		MaxHTDly	–	–	–	–	Maximum Hot-Pooling TCB delay time
DFHTASK	S	279	DSMMSCWT		DS Wait	•	•	•	•	DS storage constraint wait time
DFHTASK	S	281	MAXSTDLY		MAXSTDLY	•	•	•	•	Maximum SSL TCB delay time
DFHTASK	S	282	MAXXTDLY		MAXXTDLY	•	•	•	•	Maximum XPLink TCB delay time
DFHTASK	S	283	MAXTTDLY		MAXTTDLY	–	–	•	•	Maximum JVM server thread TCB delay time
DFHTASK	S	285	PTPWAIT		PTP Wait	•	•	•	•	3270 Bridge Partner wait time
DFHTASK	A	345	ICSTACDL		ICSTACDL	•	•	•	•	Container data len for Local IC START w/ CHANNEL
DFHTASK	A	346	ICSTRCCT		ICSTRCCT	•	•	•	•	Remote IC START requests with CHANNEL option
DFHTASK	A	347	ICSTRCDL		ICSTRCDL	•	•	•	•	Container data len for Remot IC START w/ CHANNEL
DFHTASK	S	400	T8CPUT	T8CPU	T8 CPU	–	–	•	•	CICS T8 TCB CPU time
DFHTASK	S	401	JVMTHDWT		JVMThdWt	–	–	•	•	JVM server thread wait time
DFHTEMP	S	011	TSIOWTT	TSWAIT	TS Wait	•	•	•	•	VSAM TS I/O wait time
DFHTEMP	A	044	TSGETCT	TSGET	TSGET	•	•	•	•	Temporary Storage GET requests
DFHTEMP	A	046	TSPUTACT	TSPUTAUX	TSPUTAux	•	•	•	•	Auxiliary TS PUT requests
DFHTEMP	A	047	TSPUTMCT		TSPUTMai	•	•	•	•	Main TS PUT requests
DFHTEMP	A	092	TSTOTCT	TSTOTAL	TS Total	•	•	•	•	TS Total requests
DFHTEMP	S	178	TSSHWAIT		TSShWait	•	•	•	•	Asynchronous Shared TS wait time
DFHTERM	C	002	TERM		Term	•	•	•	•	Terminal ID
DFHTERM	S	009	TCIOWTT	TCWAIT	TC Wait	•	•	•	•	Terminal wait for input time
DFHTERM	A	034	TCMSGIN1	MSGIN1	MsgIn1	•	•	•	•	Messages received count
DFHTERM	A	035	TCMSGOU1	MSGOUT1	MsgOut1	•	•	•	•	Messages sent count
DFHTERM	A	067	TCMSGIN2	MSGIN2	MsgIn2	•	•	•	•	Messages received from LU6.1
DFHTERM	A	068	TCMSGOU2	MSGOUT2	MsgOut2	•	•	•	•	Messages sent to LU6.1
DFHTERM	A	069	TCALLOCT	TCALLOC	TCALLOC	•	•	•	•	TCTTE ALLOCATE requests
DFHTERM	A	083	TCCHRIN1	CHARIN1	CharIn1	•	•	•	•	Terminal characters received count
DFHTERM	A	084	TCCHROU1	CHAROUT1	CharOut1	•	•	•	•	Terminal characters sent count
DFHTERM	A	085	TCCHRIN2	CHARIN2	CharIn2	•	•	•	•	LU6.1 characters received count
DFHTERM	A	086	TCCHROU2	CHAROUT2	CharOut2	•	•	•	•	LU6.1 characters sent count
DFHTERM	S	100	IRIOWTT	IRWAIT	IR Wait	•	•	•	•	MRO link wait time
DFHTERM	C	111	LUNAME		LUName	•	•	•	•	VTAM logical unit name
DFHTERM	S	133	LU61WTT	LU61WAIT	LU61Wait	•	•	•	•	LU6.1 wait time
DFHTERM	S	134	LU62WTT	LU62WAIT	LU62Wait	•	•	•	•	LU6.2 wait time
DFHTERM	A	135	TCM62IN2		TCM62In2	•	•	•	•	LU6.2 messages received count
DFHTERM	A	136	TCM62OU2		TCM62Ou2	•	•	•	•	LU6.2 messages sent count
DFHTERM	A	137	TCC62IN2		TCC62In2	•	•	•	•	LU6.2 characters received count
DFHTERM	A	138	TCC62OU2		TCC62Ou2	•	•	•	•	LU6.2 characters sent count
DFHTERM	A	165	TERMINFO		TermInfo	•	•	•	•	Terminal information
DFHTERM	A	165	TERMINFO	ACCMETH	Acc Meth	•	•	•	•	Terminal Access Method
DFHTERM	A	165	TERMINFO	TERMCODE	DevT	•	•	•	•	Terminal Device Type
DFHTERM	A	165	TERMINFO	NATURE	Nature	•	•	•	•	Transaction
DFHTERM	A	165	TERMINFO	SESSTYPE	SessType	•	•	•	•	Terminal session type

Table 31. Cross-reference: CMF field ID × CICS version (continued)

CMF field						CICS version				
Group	Type	ID	Name	CICS PA field name	Column heading	640	650	660	670	Description
DFHTERM	C	169	TERMCNNM		ConnName	•	•	•	•	Terminal session Connection name
DFHTERM	C	197	NETID		NET ID	•	•	•	•	VTAM LUALIAS Network ID
DFHTERM	C	198	RLUNAME		RLUNAME	•	•	•	•	VTAM LUALIAS Logical Unit name
DFHWEBB	A	224	WBREADCT	WBREAD	WB READ	•	•	•	•	Web READ requests
DFHWEBB	A	225	WBWRITCT	WBWRITE	WB WRITE	•	•	•	•	Web WRITE requests
DFHWEBB	A	231	WBRCVCT	WBRCV	WBRCV	•	•	•	•	Web RECEIVE requests
DFHWEBB	A	232	WBCHRIN		WBChrIn	•	•	•	•	Web characters received count
DFHWEBB	A	233	WBSENDCT	WBSEND	WBSEND	•	•	•	•	Web SEND requests
DFHWEBB	A	234	WBCHROUT		WBChrOut	•	•	•	•	Web characters sent count
DFHWEBB	A	235	WBTOTWCT	WBTOTAL	WB Total	•	•	•	•	Web Total requests
DFHWEBB	A	236	WBREPRCT		WBRepoRd	•	•	•	•	Web Temporary Storage Repository read requests
DFHWEBB	A	237	WBREPWCT		WBRepoWr	•	•	•	•	Web Temporary Storage Repository write requests
DFHWEBB	A	238	WBEXTRCT		WBEXTRAC	•	•	•	•	Web EXTRACT requests
DFHWEBB	A	239	WBBRWCT	WBBROWSE	WBBROWSE	•	•	•	•	Web Browse requests
DFHWEBB	A	331	WBREDOCT		WBREDOCT	•	•	•	•	CICS Web Support READ HTTPHEADER requests
DFHWEBB	A	332	WBWRTOCT		WBWRTOCT	•	•	•	•	CICS Web Support WRITE HTTPHEADER requests
DFHWEBB	A	333	WBRCVIN1		WBRCVIN1	•	•	•	•	CICS Web Support RECEIVE and CONVERSE requests
DFHWEBB	A	334	WBCHRIN1		WBCHRIN1	•	•	•	•	CICS Web Support RECEIVE and CONVERSE chars
DFHWEBB	A	335	WBSNDOU1		WBSNDOU1	•	•	•	•	CICS Web Support SEND and CONVERSE requests
DFHWEBB	A	336	WBCHROU1		WBCHROU1	•	•	•	•	CICS Web Support SEND and CONVERSE chars
DFHWEBB	A	337	WBPARSCT		WBPARSCT	•	•	•	•	CICS Web Support PARSE URL requests
DFHWEBB	A	338	WBBRWOCT		WBBRWOCT	•	•	•	•	CICS Web Support BROWSE HTTPHEADER requests
DFHWEBB	A	340	WBIWBSCT		WBIWBSCT	•	•	•	•	INVOKE SERVICE and INVOKE WEBSERVICE requests
DFHWEBB	A	341	WBREPRDL		WBREPRDL	•	•	•	•	Repository Read data length
DFHWEBB	A	342	WBREPWDL		WBREPWDL	•	•	•	•	Repository Write data length
DFHWEBB	C	380	WBURIMNM		URI Map	–	–	•	•	URIMAP resource definition name
DFHWEBB	C	381	WBPIPLNM		Pipeline	–	–	•	•	PIPELINE resource definition name
DFHWEBB	C	382	WBATMSNM		ATOMSrvc	–	–	•	•	ATOMSERVICE resource definition name
DFHWEBB	C	383	WBSVCENM		WebSrvc	–	–	•	•	WEBSERVICE resource definition name
DFHWEBB	C	384	WBSVOPNM		WebSrvOp	–	–	•	•	WEBSERVICE operation name
DFHWEBB	C	385	WBPROGNM		Web Prog	–	–	•	•	Program name in URIMAP resource definition
DFHWEBB	A	386	WBSFCRCT		SOAPFtCr	–	–	•	•	SOAPFAULT CREATE requests
DFHWEBB	A	387	WBSFTOCT		SOAPFalt	–	–	•	•	SOAPFAULT ADD
DFHWEBB	A	388	WBISSFCT		ISSOAPFt	–	–	•	•	INVOKE SERVICE request SOAP faults received
DFHWEBB	A	390	WBSREQBL		SOAPRqBL	–	–	•	•	SOAP request SOAP body length
DFHWEBB	A	392	WBSRSPBL		SOAPRsBL	–	–	•	•	SOAP response SOAP body length
DFHWEBB	S	411	MLXSSCTM		XMLSSCPU	–	–	•	•	z/OS XML System Services CPU time
DFHWEBB	A	412	MLXSSTDL		XMLDocLn	–	–	•	•	Document length parsed - z/OS System Services
DFHWEBB	A	413	MLXMLTCT		XMLTrans	–	–	•	•	Application data TRANSFORM requests
DFHWEBB	A	420	WSACBLCT		WSACBld	–	–	•	•	WSACONTEXT BUILD requests
DFHWEBB	A	421	WSACGTCT		WSACGet	–	–	•	•	WSACONTEXT GET requests
DFHWEBB	A	422	WSAEPCCT		WSAEPCre	–	–	•	•	WSAEPR CREATE requests
DFHWEBB	A	423	WSATOTCT		WSAddr	–	–	•	•	Total Web Services Addressing requests
OMCICS	C	001	DB2WARN		DB2WARN	•	•	•	•	OMEGAMON DB2 Limit Warning
OMCICS	C	002	DLIWARN		DLIWARN	•	•	•	•	OMEGAMON DLI Limit Warning
OMCICS	C	003	VSAMWARN		VSAMWARN	•	•	•	•	OMEGAMON VSAM Limit warning
OMCICS	C	004	MQWARN		MQWARN	•	•	•	•	OMEGAMON MQ Limit Warning
OMCICS	C	005	ADABWARN		ADABWARN	•	•	•	•	OMEGAMON Adabas Limit Warning
OMCICS	C	006	IDMSWARN		IDMSWARN	•	•	•	•	OMEGAMON CA-IDMS Limit Warning
OMCICS	C	007	SUPRWARN		SUPRWARN	•	•	•	•	OMEGAMON Supra Limit Warning
OMCICS	C	008	DCOMWARN		DCOMWARN	•	•	•	•	OMEGAMON CA-Datacom Limit Warning

Table 31. Cross-reference: CMF field ID × CICS version (continued)

CMF field						CICS version				
Group	Type	ID	Name	CICS PA field name	Column heading	640	650	660	670	Description
OMCICS	C	009	CPUWARN		CPUWARN	•	•	•	•	OMEGAMON CPU Limit Warning
OMCICS	C	010	ELAPWARN		ELAPWARN	•	•	•	•	OMEGAMON Elapsed Time Limit Warning
OMCICS	C	011	DSAWARN		DSAWARN	•	•	•	•	OMEGAMON DSA Limit Warning
OMCICS	C	012	EDSAWARN		EDSAWARN	•	•	•	•	OMEGAMON EDSA Limit Warning
OMCICS	C	013	CALLWARN		CALLWARN	•	•	•	•	OMEGAMON EXEC Calls Limit Warning
OMCICS	C	014	UE1WARN		UE1WARN	•	•	•	•	OMEGAMON User Event Limit Warning
OMCICS	C	015	OMEGWORK		OMEGWORK	•	•	•	•	OMEGAMON User work area
OMCICS	S	016	IDMSREQ		IDMSREQ	•	•	•	•	OMEGAMON monitored CA-IDMS requests
OMCICS	S	017	ADABREQ		ADABREQ	•	•	•	•	OMEGAMON monitored Adabas requests
OMCICS	S	018	SUPRREQ		SUPRREQ	•	•	•	•	OMEGAMON monitored Supra requests
OMCICS	S	019	DCOMREQ		DCOMREQ	•	•	•	•	OMEGAMON monitored CA-Datacom requests
OMCICS	S	020	USREVNT		USREVNT	•	•	•	•	OMEGAMON User defined events

Chapter 16. CICS PA field names by CICS version

The following cross-reference table relates the CICS PA names for CICS monitoring facility (CMF) performance class and transaction resource class data fields to the corresponding CMF field IDs and the CICS versions to which they apply.

Some columns in the table require explanation:

CICS PA field name
The name used in report forms, HDB templates, and selection criteria (and their corresponding batch command operands FIELDS and SELECT).

A blank indicates that the field is not available, typically because it is a very long field, or it is an unprintable field such as a unit-of-work or a flag.

Column heading
The heading used to identify the field in CICS PA reports and extract data sets.

CICS version
The CICS versions to which a field applies:
- Yes, the field applies to this CICS version
– No, the field does not apply to this CICS version

The table is sorted by CICS PA field name.

Note:
1. Some special fields, such as APPLID and RESPONSE, are not defined in the CMF Dictionary and are given a group name of "CICSPA". These fields are either derived from the fixed section of the CMF record (for example, APPLID), or calculated from two or more other CMF fields (for example, RESPONSE).
2. The FILENAME, TSQNAME, and DPLNAME fields are only available when CMF transaction resource class data is being collected.
3. The APPLTRAN and APPLPROG fields are only available when application programs invoke the application naming event monitoring points.

Table 32. Cross-reference: CICS PA field name × CICS version

		CMF field				CICS version				
CICS PA field name	**Column heading**	**Group**	**Type**	**ID**	**Name**	**640**	**650**	**660**	**670**	**Description**
	BTS Root	DFHCBTS	C	202	PRCSID	•	•	•	•	BTS Root Activity identifier
	BTSActID	DFHCBTS	C	203	ACTVTYID	•	•	•	•	BTS Activity identifier
	Err Flag	DFHTASK	C	064	TASKFLAG	•	•	•	•	Task error flags
	RM UOWID	DFHTASK	C	132	RMUOWID	•	•	•	•	Recovery UOW ID
	RRMSURID	DFHTASK	C	190	RRMSURID	•	•	•	•	RRMS/MVS unit-of-recovery ID (URID)
ABCODEC	ABcu	DFHPROG	C	114	ABCODEC	•	•	•	•	Current ABEND code
ABCODEO	ABor	DFHPROG	C	113	ABCODEO	•	•	•	•	Original ABEND Code
ACCMETH	Acc Meth	DFHTERM	A	165	TERMINFO	•	•	•	•	Terminal Access Method
ACTVTYNM	BTSActNm	DFHCBTS	C	204	ACTVTYNM	•	•	•	•	BTS Activity name
ADABREQ	ADABREQ	OMCICS	S	017	ADABREQ	•	•	•	•	OMEGAMON monitored Adabas requests
ADABWARN	ADABWARN	OMCICS	C	005	ADABWARN	•	•	•	•	OMEGAMON Adabas Limit Warning
ALERT	ALERT	CICSPA	A	915	ALERT	•	•	•	•	Total Alert count or percentage
APPLID	APPLID	CICSPA	C	903	APPLID	•	•	•	•	CICS Generic APPLID

Table 32. Cross-reference: CICS PA field name × CICS version (continued)

CICS PA field name	Column heading	CMF field Group	Type	ID	Name	CICS version 640	650	660	670	Description
APPLPROG	Program	DFHAPPL	C	001	APPLNAME	•	•	•	•	Application naming Program
APPLRECS	APPLRecs	CICSPA	A	002	APPLRECS	•	•	•	•	Cross-System Application records
APPLTRAN	Tran	DFHAPPL	C	001	APPLNAME	•	•	•	•	Application naming Tran ID
BAACDCCT	BTSADCRq	DFHCBTS	A	217	BAACDCCT	•	•	•	•	BTS Activity Data Containers requests
BAACQPCT	BTSAcqui	DFHCBTS	A	214	BAACQPCT	•	•	•	•	BTS Acquire Process/Activity requests
BADACTCT	BTS DefA	DFHCBTS	A	209	BADACTCT	•	•	•	•	BTS Define Activity requests
BADCPACT	BTSCancl	DFHCBTS	A	213	BADCPACT	•	•	•	•	BTS Cancel Process/Activity requests
BADFIECT	BTSDefEv	DFHCBTS	A	220	BADFIECT	•	•	•	•	BTS Define-Input Event requests
BADPROCT	BTS DefP	DFHCBTS	A	208	BADPROCT	•	•	•	•	BTS Define Process requests
BALKPACT	BTS Link	DFHCBTS	A	207	BALKPACT	•	•	•	•	BTS Link Process/Activity count
BAPRDCCT	BTSPDCRq	DFHCBTS	A	216	BAPRDCCT	•	•	•	•	BTS Process Data Containers requests
BARASYCT	BTS Asyn	DFHCBTS	A	206	BARASYCT	•	•	•	•	BTS asynchronous Process/Activity count
BARATECT	BTSRtvEv	DFHCBTS	A	219	BARATECT	•	•	•	•	BTS Retrieve-Reattach Event requests
BARMPACT	BTSResum	DFHCBTS	A	212	BARMPACT	•	•	•	•	BTS Resume Process/Activity requests
BARSPACT	BTSReset	DFHCBTS	A	210	BARSPACT	•	•	•	•	BTS Reset Process/Activity requests
BARSYNCT	BTS Sync	DFHCBTS	A	205	BARSYNCT	•	•	•	•	BTS synchronous Process/Activity count
BASUPACT	BTS Susp	DFHCBTS	A	211	BASUPACT	•	•	•	•	BTS Suspend Process/Activity requests
BATIAECT	BTSTimEv	DFHCBTS	A	221	BATIAECT	•	•	•	•	BTS TIMER Event requests
BATOTCCT	BTSTDCRq	DFHCBTS	A	218	BATOTCCT	•	•	•	•	BTS Process/Activity Data Container requests
BATOTECT	BTSTotEv	DFHCBTS	A	222	BATOTECT	•	•	•	•	BTS Event-related requests
BATOTPCT	BTSTotal	DFHCBTS	A	215	BATOTPCT	•	•	•	•	BTS Total Process/Activity requests
BFDGSTCT	BFDGSTcT	DFHCICS	A	408	BFDGSTCT	–	–	•	•	Built-in function BIF DIGEST requests
BFTOTCT	BFTotCt	DFHCICS	A	409	BFTOTCT	–	–	•	•	Total Built-in (BIF) function requests
BMSIN	BMSIN	DFHMAPP	A	051	BMSINCT	•	•	•	•	BMS IN requests
BMSMAP	BMSMAP	DFHMAPP	A	050	BMSMAPCT	•	•	•	•	BMS MAP requests
BMSOUT	BMSOUT	DFHMAPP	A	052	BMSOUTCT	•	•	•	•	BMS OUT requests
BMSTOTAL	BMSTotal	DFHMAPP	A	090	BMSTOTCT	•	•	•	•	BMS Total requests
BRDGTRAN	Brdg	DFHTASK	C	124	BRDGTRAN	•	•	•	•	Bridge Listener Transaction ID
CALLWARN	CALLWARN	OMCICS	C	013	CALLWARN	•	•	•	•	OMEGAMON EXEC Calls Limit Warning
CBSRVRNM	Corb	DFHEJBS	C	311	CBSRVRNM	•	•	•	•	CorbaServer name
CFCAPICT	CFClsAPI	DFHCICS	A	025	CFCAPICT	•	•	•	•	OO Foundation Class requests
CFDTSYNC	CFDTSync	DFHSYNC	S	177	SRVSYWTT	•	•	•	•	CF Data Table syncpoint wait time
CFDTWAIT	CFDTWait	DFHFILE	S	176	CFDTWAIT	•	•	•	•	CF Data Table access requests wait time
CHARIN1	CharIn1	DFHTERM	A	083	TCCHRIN1	•	•	•	•	Terminal characters received count
CHARIN2	CharIn2	DFHTERM	A	085	TCCHRIN2	•	•	•	•	LU6.1 characters received count
CHAROUT1	CharOut1	DFHTERM	A	084	TCCHROU1	•	•	•	•	Terminal characters sent count
CHAROUT2	CharOut2	DFHTERM	A	086	TCCHROU2	•	•	•	•	LU6.1 characters sent count
CLIENTIP	ClientIP	DFHSOCK	C	244	CLIPADDR	•	•	–	–	Client or Telnet IP address
CLIP6ADR	Clip6Adr	DFHSOCK	C	318	CLIPADDR	–	–	•	•	Client or Telnet IP address
CLIPPORT	CLIPPORT	DFHSOCK	A	330	CLIPPORT	–	•	•	•	Client IP Port Number
COMMWAIT	CommWait	CICSPA	D	906	COMMWAIT	•	•	•	•	Communications wait time
CPU	User CPU	DFHTASK	S	008	USRCPUT	•	•	•	•	CPU time
CPUWARN	CPUWARN	OMCICS	C	009	CPUWARN	•	•	•	•	OMEGAMON CPU Limit Warning
DB2CONWT	DB2ConWt	DFHDATA	S	188	DB2CONWT	•	•	•	•	DB2 Connection wait time
DB2RDYQW	DB2ThdWt	DFHDATA	S	187	DB2RDYQW	•	•	•	•	DB2 Thread wait time
DB2REQCT	DB2 Reqs	DFHDATA	A	180	DB2REQCT	•	•	•	•	DB2 requests
DB2WAIT	DB2SQLWt	DFHDATA	S	189	DB2WAIT	•	•	•	•	DB2 SQL/IFI wait time
DB2WARN	DB2WARN	OMCICS	C	001	DB2WARN	•	•	•	•	OMEGAMON DB2 Limit Warning
DBGETS	DBget	DBCTL	A	035	DBGETS	•	•	•	•	Number of Database Get calls issued
DBIOCALL	DBIOCall	DBCTL	A	007	DBIOCALL	•	•	•	•	Number of Database I/Os
DBIOELAP	DBIOElap	DBCTL	S	005	DBIOELAP	•	•	•	•	Elapsed time for Database I/O
DBUPDATE	DBupdate	DBCTL	A	036	DBUPDATE	•	•	•	•	Number of Database Update calls issued
DBWAITS	DBwait	DBCTL	A	037	DBWAITS	•	•	•	•	Number of Database waits
DCOMREQ	DCOMREQ	OMCICS	S	019	DCOMREQ	•	•	•	•	OMEGAMON monitored CA-Datacom requests
DCOMWARN	DCOMWARN	OMCICS	C	008	DCOMWARN	•	•	•	•	OMEGAMON CA-Datacom Limit Warning
DEDBBFRW	DEDBBfrW	DBCTL	A	031	DEDBBFRW	•	•	•	•	Number of waits for DEDB buffers

Table 32. Cross-reference: CICS PA field name × CICS version (continued)

CICS PA field name	Column heading	CMF field Group	Type	ID	Name	CICS version 640	650	660	670	Description
DEDBCALL	DEDBcall	DBCTL	A	027	DEDBCALL	•	•	•	•	Number of DEDB calls
DEDBRDOP	DEDBRdOp	DBCTL	A	028	DEDBRDOP	•	•	•	•	Number of DEDB read operations
DHCREATE	DHCREATE	DFHDOCH	A	226	DHCRECT	•	•	•	•	Document Handler CREATE requests
DHDELETE	DHDELETE	DFHDOCH	A	223	DHDELCT	–	•	•	•	Document Handler DELETE requests
DHINSERT	DHINSERT	DFHDOCH	A	227	DHINSCT	•	•	•	•	Document Handler INSERT requests
DHRETRVE	DHRETRVE	DFHDOCH	A	229	DHRETCT	•	•	•	•	Document Handler RETRIEVE requests
DHSET	DHSET	DFHDOCH	A	228	DHSETCT	•	•	•	•	Document Handler SET requests
DHTOTAL	DH Total	DFHDOCH	A	230	DHTOTCT	•	•	•	•	Document Handler Total requests
DHTOTDCL	DHDocLen	DFHDOCH	A	240	DHTOTDCL	•	•	•	•	Total length of all documents created
DISPATCH	Dispatch	DFHTASK	S	007	USRDISPT	•	•	•	•	Dispatch time
DISPWAIT	DispWait	DFHTASK	S	102	DISPWTT	•	•	•	•	Redispatch wait time
DLETCALL	DLETcall	DBCTL	A	015	DLETCALL	•	•	•	•	Number of Database DLET calls issued
DLICALLS	DLIcalls	DBCTL	A	017	DLICALLS	•	•	•	•	Total DL/I Database calls
DLIWARN	DLIWARN	OMCICS	C	002	DLIWARN	•	•	•	•	OMEGAMON DLI Limit Warning
DPLNAME	DPL Name	CICSPA	C	919	DPLNAME	•	•	•	•	Distributed program link name
DPLRECS	DPL Recs	CICSPA	A	005	DPLRECS	•	•	•	•	Cross-System DPL records
DSAWARN	DSAWARN	OMCICS	C	011	DSAWARN	•	•	•	•	OMEGAMON DSA Limit Warning
DSCHMDLY	DSCHMDLY	DFHTASK	S	247	DSCHMDLY	•	•	•	•	Redispatch wait time caused by change-TCB mode
DSMMSCWT	DS Wait	DFHTASK	S	279	DSMMSCWT	•	•	•	•	DS storage constraint wait time
DSPDELAY	Disp1Dly	DFHTASK	S	125	DSPDELAY	•	•	•	•	First dispatch wait time
DSTCBHWM	DSTCBHWM	DFHTASK	A	252	DSTCBHWM	•	•	•	•	CICS Dispatcher TCB HWM
DSTCBMWT	DSTCBMWT	DFHTASK	S	268	DSTCBMWT	•	•	•	•	Dispatcher TCB Mismatch wait time
ECEFOPCT	ECEFOPCT	DFHCICS	A	416	ECEFOPCT	–	–	•	•	Event Filter operations
ECEVNTCT	ECEVNTCT	DFHCICS	A	417	ECEVNTCT	–	–	•	•	Events captured
ECSEVCCT	ECSEVCCT	DFHCICS	A	418	ECSEVCCT	–	–	–	•	Synchronous Emission Events captured
ECSIGECT	ECSIGECT	DFHCICS	A	415	ECSIGECT	–	–	•	•	SIGNAL EVENT requests
EDSAWARN	EDSAWARN	OMCICS	C	012	EDSAWARN	•	•	•	•	OMEGAMON EDSA Limit Warning
EICTOTCT	EICTotCt	DFHCICS	A	402	EICTOTCT	–	–	•	•	EXEC CICS requests
EJBACTIV	EJBActiv	DFHEJBS	A	312	EJBSACCT	•	•	•	•	Number of Bean State Activation requests
EJBCREAT	EJBCreat	DFHEJBS	A	314	EJBCRECT	•	•	•	•	Number of Bean Creation requests
EJBMETHD	EJBMethd	DFHEJBS	A	316	EJBMTHCT	•	•	•	•	Number of EJB Method Calls
EJBPASIV	EJBPasiv	DFHEJBS	A	313	EJBSPACT	•	•	•	•	Number of Bean State Passivation requests
EJBREMOV	EJBRemov	DFHEJBS	A	315	EJBREMCT	•	•	•	•	Number of Bean Removal requests
EJBTOTAL	EJBTotal	DFHEJBS	A	317	EJBTOTCT	•	•	•	•	Total Number of EJB requests
ELAPWARN	ELAPWARN	OMCICS	C	010	ELAPWARN	•	•	•	•	OMEGAMON Elapsed Time Limit Warning
ENQDELAY	ENQDelay	DFHTASK	S	129	ENQDELAY	•	•	•	•	Local Enqueue wait time
ERRFLAGS	Err Flag	DFHTASK	A	064	TASKFLAG	•	•	•	•	Task error flags
EXCLDEQS	ExclDEQs	DBCTL	A	026	EXCLDEQS	•	•	•	•	Number of Exclusive Dequeues
EXCLENQS	ExclENQs	DBCTL	A	024	EXCLENQS	•	•	•	•	Number of Exclusive Enqueues
EXCLENQW	ExclENQW	DBCTL	A	025	EXCLENQW	•	•	•	•	Number of waits on Exclusive Enqueues
EXWAIT	Exc Wait	DFHCICS	S	103	EXWTTIME	•	•	•	•	Exception Conditions wait time
FCADD	FCADD	DFHFILE	A	039	FCADDCT	•	•	•	•	File ADD requests
FCAMCT	FCAMRq	DFHFILE	A	070	FCAMCT	•	•	•	•	File access-method requests
FCBROWSE	FCBROWSE	DFHFILE	A	038	FCBRWCT	•	•	•	•	File Browse requests
FCDELETE	FCDELETE	DFHFILE	A	040	FCDELCT	•	•	•	•	File DELETE requests
FCGET	FCGET	DFHFILE	A	036	FCGETCT	•	•	•	•	File GET requests
FCPUT	FCPUT	DFHFILE	A	037	FCPUTCT	•	•	•	•	File PUT requests
FCTOTAL	FC Total	DFHFILE	A	093	FCTOTCT	•	•	•	•	File Control requests
FCTY	Fcty	DFHTASK	C	163	FCTYNAME	•	•	•	•	Transaction Facility name
FCTYTYPE	FctyType	DFHTASK	A	164	TRANFLAG	•	•	•	•	Transaction facility type
FCWAIT	FC Wait	DFHFILE	S	063	FCIOWTT	•	•	•	•	File I/O wait time
FILENAME	FileName	CICSPA	C	916	FILENAME	•	•	•	•	File name
FUNCSHIP	FuncShip	CICSPA	A	004	FUNCSHIP	•	•	•	•	Cross-System Function Shipping records
GHNCALL	GHNcall	DBCTL	A	012	GHNCALL	•	•	•	•	Number of Database GHN calls issued
GHNPCALL	GHNPcall	DBCTL	A	013	GHNPCALL	•	•	•	•	Number of Database GHNP calls issued
GHUCALL	GHUcall	DBCTL	A	011	GHUCALL	•	•	•	•	Number of Database GHU calls issued

Table 32. Cross-reference: CICS PA field name × CICS version (continued)

CICS PA field name	Column heading	CMF field Group	Type	ID	Name	CICS version 640	650	660	670	Description
GIVEUPWT	GiveUpWt	DFHTASK	S	184	GVUPWAIT	•	•	•	•	Give up control wait time
GNCALL	GNcall	DBCTL	A	009	GNCALL	•	•	•	•	Number of Database GN calls issued
GNPCALL	GNPcall	DBCTL	A	010	GNPCALL	•	•	•	•	Number of Database GNP calls issued
GNQDELAY	GNQDelay	DFHTASK	S	123	GNQDELAY	•	•	•	•	Global Enqueue wait time
GUCALL	GUcall	DBCTL	A	008	GUCALL	•	•	•	•	Number of Database GU calls issued
ICDELAY	IC Delay	DFHTASK	S	183	ICDELAY	•	•	•	•	Interval Control (IC) wait time
ICPUT	ICSTART	DFHTASK	A	059	ICPUINCT	•	•	•	•	Interval Control START or INITIATE requests
ICSTACCT	ICSTACCT	DFHTASK	A	065	ICSTACCT	•	•	•	•	Local IC START requests with CHANNEL option
ICSTACDL	ICSTACDL	DFHTASK	A	345	ICSTACDL	•	•	•	•	Container data len for Local IC START w/ CHANNEL
ICSTRCCT	ICSTRCCT	DFHTASK	A	346	ICSTRCCT	•	•	•	•	Remote IC START requests with CHANNEL option
ICSTRCDL	ICSTRCDL	DFHTASK	A	347	ICSTRCDL	•	•	•	•	Container data len for Remot IC START w/ CHANNEL
ICTOTAL	IC Total	DFHTASK	A	066	ICTOTCT	•	•	•	•	Interval Control requests
IDMSREQ	IDMSREQ	OMCICS	S	016	IDMSREQ	•	•	•	•	OMEGAMON monitored CA-IDMS requests
IDMSWARN	IDMSWARN	OMCICS	C	006	IDMSWARN	•	•	•	•	OMEGAMON CA-IDMS Limit Warning
IMSREQCT	IMS Reqs	DFHDATA	A	179	IMSREQCT	•	•	•	•	IMS (DBCTL) requests
IMSWAIT	IMS Wait	DFHDATA	S	186	IMSWAIT	•	•	•	•	IMS (DBCTL) wait time
INTCWAIT	IntCWait	DBCTL	S	003	INTCWAIT	•	•	•	•	Elapsed wait time for Intent Conflict
IOWAIT	I/O Wait	CICSPA	D	907	IOWAIT	•	•	•	•	Total IO wait time
IRESP	Int Resp	CICSPA	D	908	IRESP	•	•	•	•	Transaction internal response time
IRWAIT	IR Wait	DFHTERM	S	100	IRIOWTT	•	•	•	•	MRO link wait time
ISALLOC	ISALLOC	DFHSOCK	A	288	ISALLOCT	–	•	•	•	Allocate Session requests for sessions on IP
ISIPICNM	ISIPICNM	DFHSOCK	C	305	ISIPCNNM	–	•	•	•	Name of IPCONN definition that attached the task
ISRTCALL	ISRTcall	DBCTL	A	014	ISRTCALL	•	•	•	•	Number of Database ISRT calls issued
ISWAIT	IS Wait	DFHSOCK	S	300	ISIOWTT	–	•	•	•	IPCONN link wait time
J8CPU	J8 CPU	DFHTASK	S	260	J8CPUT	•	•	•	•	CICS J8 TCB CPU time
J9CPU	J9 CPU	DFHTASK	S	267	J9CPUT	•	•	•	•	User task J9 Mode CPU time
JCWAIT	JC Wait	DFHJOUR	S	010	JCIOWTT	•	•	•	•	Journal I/O wait time
JNLPUT	JnlWrite	DFHJOUR	A	058	JNLWRTCT	•	•	•	•	Journal write requests
JOBNAME	Jobname	CICSPA	C	905	JOBNAME	•	•	•	•	Job Name
JVMITIME	JVMITime	DFHTASK	S	273	JVMITIME	•	•	•	•	JVM initialize elapsed time
JVMMTIME	JVM Meth	CICSPA	D	910	JVMMTIME	•	•	•	•	JVM Method time
JVMRTIME	JVMRTime	DFHTASK	S	275	JVMRTIME	•	•	•	•	JVM reset elapsed time
JVMSUSP	JVM Susp	DFHTASK	S	254	JVMSUSP	•	•	•	•	JVM suspend time
JVMTHDWT	JVMThdWt	DFHTASK	S	401	JVMTHDWT	–	–	•	•	JVM server thread wait time
JVMTIME	JVM Elap	DFHTASK	S	253	JVMTIME	•	•	•	•	JVM elapsed time
KY8CPU	KY8 CPU	DFHTASK	S	263	KY8CPUT	•	•	•	•	CICS Key 8 TCB CPU time
KY8DISPT	KY8 Disp	DFHTASK	S	262	KY8DISPT	•	•	•	•	CICS Key 8 TCB dispatch time
KY9CPU	KY9 CPU	DFHTASK	S	265	KY9CPUT	•	•	•	•	User task Key 9 Mode CPU time
KY9DISPT	KY9 Disp	DFHTASK	S	264	KY9DISPT	•	•	•	•	User task Key 9 Mode Dispatch time
L8CPU	L8 CPU	DFHTASK	S	259	L8CPUT	•	•	•	•	CICS L8 TCB CPU time
L9CPU	L9 CPU	DFHTASK	S	266	L9CPUT	•	•	•	•	User task L9 CPU time
LOCKDLAY	LM Delay	DFHTASK	S	128	LMDELAY	•	•	•	•	Lock Manager (LM) wait time
LOGWRITE	LogWrite	DFHJOUR	A	172	LOGWRTCT	•	•	•	•	Log Stream write requests
LU61WAIT	LU61Wait	DFHTERM	S	133	LU61WTT	•	•	•	•	LU6.1 wait time
LU62WAIT	LU62Wait	DFHTERM	S	134	LU62WTT	•	•	•	•	LU6.2 wait time
LUNAME	LUName	DFHTERM	C	111	LUNAME	•	•	•	•	VTAM logical unit name
MAXHTDLY	MaxHTDly	DFHTASK	S	278	MAXHTDLY	–	–	–	–	Maximum Hot-Pooling TCB delay time
MAXJTDLY	MaxJTDly	DFHTASK	S	277	MAXJTDLY	•	•	•	•	Maximum JVM TCB delay time
MAXOTDLY	MaxOTDly	DFHTASK	S	250	MXTOTDLY	•	•	•	•	Maximum Open TCB delay time
MAXSTDLY	MAXSTDLY	DFHTASK	S	281	MAXSTDLY	•	•	•	•	Maximum SSL TCB delay time
MAXTTDLY	MAXTTDLY	DFHTASK	S	283	MAXTTDLY	–	–	•	•	Maximum JVM server thread TCB delay time
MAXXTDLY	MAXXTDLY	DFHTASK	S	282	MAXXTDLY	•	•	•	•	Maximum XPLink TCB delay time
MLXMLTCT	XMLTrans	DFHWEBB	A	413	MLXMLTCT	–	–	•	•	Application data TRANSFORM requests

Table 32. Cross-reference: CICS PA field name × CICS version (continued)

CICS PA field name	Column heading	CMF field Group	Type	ID	Name	CICS version 640	650	660	670	Description
MLXSSCTM	XMLSSCPU	DFHWEBB	S	411	MLXSSCTM	–	–	•	•	z/OS XML System Services CPU time
MLXSSTDL	XMLDocLn	DFHWEBB	A	412	MLXSSTDL	–	–	•	•	Document length parsed - z/OS System Services
MQWARN	MQWARN	OMCICS	C	004	MQWARN	•	•	•	•	OMEGAMON MQ Limit Warning
MSCPU	MS CPU	DFHTASK	S	258	MSCPUT	•	•	•	•	CICS TCBs CPU time
MSDISPT	MS Disp	DFHTASK	S	257	MSDISPT	•	•	•	•	CICS TCBs dispatch time
MSGIN1	MsgIn1	DFHTERM	A	034	TCMSGIN1	•	•	•	•	Messages received count
MSGIN2	MsgIn2	DFHTERM	A	067	TCMSGIN2	•	•	•	•	Messages received from LU6.1
MSGOUT1	MsgOut1	DFHTERM	A	035	TCMSGOU1	•	•	•	•	Messages sent count
MSGOUT2	MsgOut2	DFHTERM	A	068	TCMSGOU2	•	•	•	•	Messages sent to LU6.1
MVSID	MVS ID	CICSPA	C	904	MVSID	•	•	•	•	MVS SMF ID
MXTDELAY	MXTDelay	DFHTASK	S	127	MXTDELAY	•	•	•	•	First dispatch MXT wait time
NATURE	Nature	DFHTERM	A	165	TERMINFO	•	•	•	•	Transaction
NETID	NET ID	DFHTERM	C	197	NETID	•	•	•	•	VTAM LUALIAS Network ID
NETNAME	NETName	DFHTASK	C	097	NETUOWPX	•	•	•	•	Originating System VTAM network name
NETUOWSX	NETUOWID	DFHTASK	C	098	NETUOWSX	•	•	•	•	Network UOW ID
OADATA1	OAData1	DFHCICS	C	352	OADATA1	–	–	–	•	Originating Adapter data 1
OADATA2	OAData2	DFHCICS	C	353	OADATA2	–	–	–	•	Originating Adapter data 2
OADATA3	OAData3	DFHCICS	C	354	OADATA3	–	–	–	•	Originating Adapter data 3
OADID	OADID	DFHCICS	C	351	OADID	–	–	–	•	Originating Adapter Identifier
OAPPLID	OAPPLID	DFHCICS	C	360	OAPPLID	–	•	•	•	Originating CICS APPLID
OCLI6ADR	OCli6Adr	DFHCICS	C	372	OCLIPADR	–	–	•	•	Originating Client or Telnet IP address
OCLINTIP	OClintIP	DFHCICS	C	368	OCLIPADR	–	•	–	–	Originating Client or Telnet IP address
OCLIPORT	OCLIPORT	DFHCICS	A	369	OCLIPORT	–	•	•	•	Originating Client IP Port Number
OFCTY	OFcty	DFHCICS	C	371	OFCTYNME	–	•	•	•	Originating Transaction Facility name
OFCTYTYP	OFctyTyp	DFHCICS	A	370	OTRANFLG	–	•	•	•	Originating Transaction Facility Type
OMEGWORK	OMEGWORK	OMCICS	C	015	OMEGWORK	•	•	•	•	OMEGAMON User work area
ONETWKID	ONETWKID	DFHCICS	C	359	ONETWKID	–	•	•	•	Originating Network ID
OORIGIN	OOrigin	DFHCICS	C	370	OTRANFLG	–	•	•	•	Originating Transaction Origin type
OPORT	OPORT	DFHCICS	A	367	OPORTNUM	–	•	•	•	Originating TCP/IP Port Number
ORIGIN	Origin	DFHTASK	C	164	TRANFLAG	•	•	•	•	Transaction origin type
OSLATNCY	OSLatncy	CICSPA	D	920	OSLATNCY	–	•	•	•	Task start latency since Origin task start
OSOWAIT	OSO Wait	DFHSOCK	S	299	SOOIOWTT	•	•	•	•	Outbound Socket I/O Wait Time
OSTART	OStart	DFHCICS	T	361	OSTART	–	•	•	•	Originating Task start time
OTASKNO	OTaskNo	DFHCICS	P	362	OTRANNUM	–	•	•	•	Originating Transaction number
OTCPSRVC	OTCPIPSr	DFHCICS	C	366	OTCPSVCE	–	•	•	•	Originating TCP/IP Service Name
OTRAN	OTran	DFHCICS	C	363	OTRAN	–	•	•	•	Originating Transaction identifier
OTRANFLG	OTranFlg	DFHCICS	A	370	OTRANFLG	–	•	•	•	Originating Transaction flags
OTRANTYP	OTranTyp	DFHCICS	C	370	OTRANFLG	–	•	•	•	Originating Transaction type
OTSID	OTS ID	DFHTASK	C	194	OTSTID	•	•	•	•	OTS Transaction ID
OTSINDWT	OTSIndWt	DFHSYNC	S	199	OTSINDWT	•	•	•	•	OTS Indoubt Wait time
OUSERCOR	OUserCor	DFHCICS	C	365	OUSERCOR	–	•	•	•	Originating User Correlator
OUSERID	OUserid	DFHCICS	C	364	OUSERID	–	•	•	•	Originating User ID
OVFLBFRU	OvflBfrU	DBCTL	A	029	OVFLBFRU	•	•	•	•	Number of Overflow Buffers used
PC24BHWM	PC24bHWM	DFHSTOR	A	108	PC24BHWM	•	•	•	•	Program Storage HWM below 16MB
PC24CHWM	PC24CHWM	DFHSTOR	A	143	PC24CHWM	•	•	•	•	Program Storage (CDSA) HWM below 16MB
PC24RHWM	PC24RHWM	DFHSTOR	A	162	PC24RHWM	•	•	•	•	Program Storage (RDSA) HWM below 16MB
PC24SHWM	PC24SHWM	DFHSTOR	A	160	PC24SHWM	•	•	•	•	Program Storage (SDSA) HWM below 16MB
PC31AHWM	PC31aHWM	DFHSTOR	A	139	PC31AHWM	•	•	•	•	Program Storage HWM above 16MB
PC31CHWM	PC31CHWM	DFHSTOR	A	142	PC31CHWM	•	•	•	•	Program Storage (ECDSA) HWM above 16MB
PC31RHWM	PC31RHWM	DFHSTOR	A	122	PC31RHWM	•	•	•	•	Program Storage (ERDSA) HWM above 16MB
PC31SHWM	PC31SHWM	DFHSTOR	A	161	PC31SHWM	•	•	•	•	Program Storage (ESDSA) HWM above 16MB
PCDLCRDL	PCDLCRDL	DFHPROG	A	287	PCDLCRDL	•	•	•	•	Container data length for DPL RETURN w/ CHANNEL
PCDLCSDL	PCDLCSDL	DFHPROG	A	286	PCDLCSDL	•	•	•	•	Container data length for DPL reqs with CHANNEL
PCDPL	PCDPLINK	DFHPROG	A	073	PCDPLCT	•	•	•	•	Distributed Program Link (DPL) requests

Table 32. Cross-reference: CICS PA field name × CICS version (continued)

CICS PA field name	Column heading	CMF field Group	Type	ID	Name	CICS version 640	650	660	670	Description
PCDPLCCT	PCDPLCCT	DFHPROG	A	308	PCDPLCCT	•	•	•	•	DPL requests with CHANNEL option
PCLINK	PCLINK	DFHPROG	A	055	PCLINKCT	•	•	•	•	Program LINK requests
PCLNKCCT	PCLNKCCT	DFHPROG	A	306	PCLNKCCT	•	•	•	•	LINK requests with CHANNEL option
PCLOAD	PCLOAD	DFHPROG	A	057	PCLOADCT	•	•	•	•	Program LOAD requests
PCLOADTM	PCLOADWt	DFHPROG	S	115	PCLOADTM	•	•	•	•	Program Library wait time
PCLURM	PCLNKURM	DFHPROG	A	072	PCLURMCT	•	•	•	•	Program LINK URM requests
PCRTNCCT	PCRTNCCT	DFHPROG	A	309	PCRTNCCT	•	•	•	•	Program RETURN requests with CHANNEL option
PCRTNCDL	PCRTNCDL	DFHPROG	A	310	PCRTNCDL	•	•	•	•	Container data length for RETURN with CHANNEL
PCSTGHWM	PCStgHWM	DFHSTOR	A	087	PCSTGHWM	•	•	•	•	Program Storage HWM above and below 16MB
PCXCLCCT	PCXCLCCT	DFHPROG	A	307	PCXCLCCT	•	•	•	•	XCTL requests with CHANNEL option
PCXCTL	PCXCTL	DFHPROG	A	056	PCXCTLCT	•	•	•	•	Program XCTL requests
PGBRWCCT	PGBRWCCT	DFHCHNL	A	322	PGBRWCCT	•	•	•	•	BROWSE CHANNEL CONTAINER requests
PGCRECCT	PGCRECCT	DFHCHNL	A	328	PGCRECCT	•	•	•	•	Number of Containers created
PGCSTHWM	PGCSTHWM	DFHCHNL	A	329	PGCSTHWM	–	•	•	•	Maximum Container Storage allocated to task
PGGETCCT	PGGETCCT	DFHCHNL	A	323	PGGETCCT	•	•	•	•	GET CHANNEL CONTAINER requests
PGGETCDL	PGGETCDL	DFHCHNL	A	326	PGGETCDL	•	•	•	•	GET CHANNEL CONTAINER data length
PGMOVCCT	PGMOVCCT	DFHCHNL	A	325	PGMOVCCT	•	•	•	•	MOVE CHANNEL CONTAINER requests
PGPUTCCT	PGPUTCCT	DFHCHNL	A	324	PGPUTCCT	•	•	•	•	PUT CHANNEL CONTAINER requests
PGPUTCDL	PGPUTCDL	DFHCHNL	A	327	PGPUTCDL	•	•	•	•	PUT CHANNEL CONTAINER data length
PGTOTCCT	PGTOTCCT	DFHCHNL	A	321	PGTOTCCT	•	•	•	•	Total number of CHANNEL CONTAINER requests
PHAPPLID	PHAPPLID	DFHCICS	C	374	PHAPPLID	–	–	–	•	Previous Hop Data APPLID
PHCOUNT	PHCount	DFHCICS	A	378	PHCOUNT	–	–	–	•	Previous Hop Data Count
PHLATNCY	PHLatncy	CICSPA	D	921	PHLATNCY	–	–	–	•	Previous Hop latency time
PHNTWKID	PHNTWKID	DFHCICS	C	373	PHNTWKID	–	–	–	•	Previous Hop Data Network ID
PHSTART	PHStart	DFHCICS	T	375	PHSTART	–	–	–	•	Previous Hop Data Task Start
PHTASKNO	PHTaskNo	DFHCICS	P	376	PHTRANNO	–	–	–	•	Previous Hop Data Transaction Number
PHTRAN	PHTran	DFHCICS	C	377	PHTRAN	–	–	–	•	Previous Hop Data Transaction ID
PILOCKEL	PILockEl	DBCTL	S	006	PILOCKEL	•	•	•	•	Elapsed time for PI Locking
POOLWAIT	PoolWait	DBCTL	S	002	POOLWAIT	•	•	•	•	Elapsed wait time for Pool Space
PORT	PORT	DFHSOCK	A	246	PORTNUM	•	•	•	•	TCP/IP Port Number
PRCSNAME	BTS Proc	DFHCBTS	C	200	PRCSNAME	•	•	•	•	BTS Process name
PRCSTYPE	BTS PTyp	DFHCBTS	C	201	PRCSTYPE	•	•	•	•	BTS Process type
PROGRAM	Program	DFHPROG	C	071	PGMNAME	•	•	•	•	Program name
PSBNAME	PSB Name	DBCTL	C	001	PSBNAME	•	•	•	•	PSB Name
PTPWAIT	PTP Wait	DFHTASK	S	285	PTPWAIT	•	•	•	•	3270 Bridge Partner wait time
QRCPU	QR CPU	DFHTASK	S	256	QRCPUT	•	•	•	•	CICS QR TCB CPU time
QRDISPT	QR Disp	DFHTASK	S	255	QRDISPT	•	•	•	•	CICS QR TCB dispatch time
QRMODDLY	QRModDly	DFHTASK	S	249	QRMODDLY	•	•	•	•	CICS QR TCB redispatch wait time
RECCOUNT	RecCount	DFHCICS	A	131	PERRECNT	•	•	•	•	Task Performance record count
RELEASE	Rlse	CICSPA	C	909	RELEASE	•	•	•	•	CICS release
REPLCALL	REPLcall	DBCTL	A	016	REPLCALL	•	•	•	•	Number of Database REPL calls issued
RESPONSE	Response	CICSPA	D	901	RESP	•	•	•	•	Transaction response time
RLSCPU	RLS CPU	DFHFILE	S	175	RLSCPUT	•	•	•	•	RLS File Request CPU (SRB) time
RLSWAIT	RLS Wait	DFHFILE	S	174	RLSWAIT	•	•	•	•	RLS File I/O wait time
RLUNAME	RLUNAME	DFHTERM	C	198	RLUNAME	•	•	•	•	VTAM LUALIAS Logical Unit name
RMICPSM	RMI CPSM	DFHRMI	S	007	RMICPSM	•	•	•	•	RMI elapsed time for CICSPlex SM requests
RMIDB2	RMI DB2	DFHRMI	S	003	RMIDB2	•	•	•	•	RMI elapsed time for DB2 requests
RMIDBCTL	RMIDBCTL	DFHRMI	S	004	RMIDBCTL	•	•	•	•	RMI elapsed time for DBCTL requests
RMIEXDLI	RMIEXDLI	DFHRMI	S	005	RMIEXDLI	•	•	•	•	RMI elapsed time for EXEC DLI requests
RMIMQM	RMI MQ	DFHRMI	S	006	RMIMQM	•	•	•	•	RMI elapsed time for WebSphere MQ requests
RMIOTHER	RMI Othr	DFHRMI	S	002	RMIOTHER	•	•	•	•	RMI other elapsed time
RMIOTIME	RMIOTime	CICSPA	D	911	RMIOTIME	•	•	•	•	Resource Manager Interface (RMI) other time
RMISUSP	RMI Susp	DFHTASK	S	171	RMISUSP	•	•	•	•	Resource Manager Interface (RMI) suspend time

Table 32. Cross-reference: CICS PA field name × CICS version (continued)

CICS PA field name	Column heading	CMF field Group	Type	ID	Name	CICS version 640	650	660	670	Description
RMITCPIP	RMITCPIP	DFHRMI	S	008	RMITCPIP	•	•	•	•	RMI elapsed time for TCP/IP socket requests
RMITIME	RMI Elap	DFHTASK	S	170	RMITIME	•	•	•	•	Resource Manager Interface (RMI) elapsed time
RMITOTAL	RMITotal	DFHRMI	S	001	RMITOTAL	•	•	•	•	RMI total elapsed time
ROCPU	RO CPU	DFHTASK	S	270	ROCPUT	•	•	•	•	CICS RO TCB CPU time
RODISPT	RO Disp	DFHTASK	S	269	RODISPT	•	•	•	•	CICS RO TCB dispatch time
RPTCLASS	RptClass	DFHCICS	C	168	RPTCLASS	•	•	•	•	WLM Report Class
RQPWAIT	RQP Wait	DFHTASK	S	193	RQPWAIT	•	•	•	•	Request Processor Wait Time
RQRWAIT	RQR Wait	DFHTASK	S	192	RQRWAIT	•	•	•	•	Request Receiver Wait Time
RRMSWAIT	RRMSWait	DFHTASK	S	191	RRMSWAIT	•	•	•	•	Resource Recovery Services indoubt wait time
RSYSID	RSID	DFHCICS	C	130	RSYSID	•	•	•	•	Remote System ID
RTYPE	RTyp	DFHCICS	C	112	RTYPE	•	•	•	•	Performance record type
RUNTRWTT	BTSRunWt	DFHTASK	S	195	RUNTRWTT	•	•	•	•	BTS run Process/Activity wait time
S8CPU	S8 CPU	DFHTASK	S	261	S8CPUT	•	•	•	•	CICS S8 TCB CPU time
SC24CGET	SC24CGet	DFHSTOR	A	117	SCCGETCT	•	•	•	•	CDSA GETMAINs below 16MB
SC24CHWM	SC24CHWM	DFHSTOR	A	116	SC24CHWM	•	•	•	•	CDSA HWM below 16MB
SC24COCC	SC24COcc	DFHSTOR	A	118	SC24COCC	•	•	•	•	CDSA Storage Occupancy below 16MB
SC24FSHR	SC24FShr	DFHSTOR	A	146	SC24FSHR	•	•	•	•	CDSA/SDSA storage FREEMAINed below 16MB
SC24GSHR	SC24GShr	DFHSTOR	A	145	SC24GSHR	•	•	•	•	CDSA/SDSA storage GETMAINed below 16MB
SC24SGET	SC24SGet	DFHSTOR	A	144	SC24SGCT	•	•	•	•	CDSA/SDSA GETMAINs below 16MB
SC24UGET	SC24UGet	DFHSTOR	A	054	SCUGETCT	•	•	•	•	UDSA GETMAINs below 16MB
SC24UHWM	SC24UHWM	DFHSTOR	A	033	SCUSRHWM	•	•	•	•	UDSA HWM below 16MB
SC24UOCC	SC24UOcc	DFHSTOR	A	095	SCUSRSTG	•	•	•	•	UDSA Storage Occupancy below 16MB
SC31CGET	SC31CGet	DFHSTOR	A	120	SCCGETCT	•	•	•	•	ECDSA GETMAINs above 16MB
SC31CHWM	SC31CHWM	DFHSTOR	A	119	SC31CHWM	•	•	•	•	ECDSA HWM above 16MB
SC31COCC	SC31COcc	DFHSTOR	A	121	SC31COCC	•	•	•	•	ECDSA Storage Occupancy above 16MB
SC31FSHR	SC31FShr	DFHSTOR	A	149	SC31FSHR	•	•	•	•	ECDSA/ESDSA storage FREEMAINed above 16MB
SC31GSHR	SC31GShr	DFHSTOR	A	148	SC31GSHR	•	•	•	•	ECDSA/ESDSA storage GETMAINed above 16MB
SC31SGET	SC31SGet	DFHSTOR	A	147	SC31SGCT	•	•	•	•	ECDSA/ESDSA GETMAINs above 16MB
SC31UGET	SC31UGet	DFHSTOR	A	105	SCUGETCT	•	•	•	•	EUDSA GETMAINs above 16MB
SC31UHWM	SC31UHWM	DFHSTOR	A	106	SCUSRHWM	•	•	•	•	EUDSA HWM above 16MB
SC31UOCC	SC31UOcc	DFHSTOR	A	107	SCUCRSTG	•	•	•	•	EUDSA Storage Occupancy above 16MB
SCHEDEND	SchedEnd	DBCTL	T	034	SCHEDEND	•	•	•	•	IMS Schedule end time
SCHEDSTA	SchedSta	DBCTL	T	033	SCHEDSTA	•	•	•	•	IMS Schedule start time
SCHTELAP	SchTElap	DBCTL	S	004	SCHTELAP	•	•	•	•	Elapsed time for Schedule Process
SESSTYPE	SessType	DFHTERM	A	165	TERMINFO	•	•	•	•	Terminal session type
SOBYDECT	SockDcry	DFHSOCK	A	243	SOBYDECT	•	•	•	•	Secure Socket bytes decrypted count
SOBYENCT	SockEcry	DFHSOCK	A	242	SOBYENCT	•	•	•	•	Secure Socket bytes encrypted count
SOCHRIN	SOChrIn	DFHSOCK	A	295	SOCHRIN	•	•	•	•	Outbound Sockets characters received count
SOCHRIN1	SOChrIn1	DFHSOCK	A	302	SOCHRIN1	•	•	•	•	Inbound Sockets characters received count
SOCHROU1	SOChrOu1	DFHSOCK	A	304	SOCHROU1	•	•	•	•	Inbound Sockets characters sent count
SOCHROUT	SOChrOut	DFHSOCK	A	297	SOCHROUT	•	•	•	•	Outbound Sockets characters sent count
SOCNPSCT	SOCNPSRq	DFHSOCK	A	290	SOCNPSCT	•	•	•	•	Create Non-Persistent Outbound Socket reqs
SOCPSCT	SOCPSReq	DFHSOCK	A	291	SOCPSCT	•	•	•	•	Create Persistent Outbound Socket requests
SOEXTRCT	SOEXTRAC	DFHSOCK	A	289	SOEXTRCT	•	•	•	•	EXTRACT TCP/IP and CERTIFICATE requests
SOMSGIN1	SOMsgIn1	DFHSOCK	A	301	SOMSGIN1	•	•	•	•	Inbound Sockets RECEIVE requests
SOMSGOU1	SOMsgOu1	DFHSOCK	A	303	SOMSGOU1	•	•	•	•	Inbound Sockets SEND requests
SONPSHWM	SONPSHWM	DFHSOCK	A	292	SONPSHWM	•	•	•	•	Non-Persistent Outbound Socket HWM
SOPSHWM	SOPSHWM	DFHSOCK	A	293	SOPSHWM	•	•	•	•	Persistent Outbound Socket HWM
SORCV	SO Recv	DFHSOCK	A	294	SORCVCT	•	•	•	•	Outbound Sockets RECEIVE requests
SOSEND	SO SEND	DFHSOCK	A	296	SOSENDCT	•	•	•	•	Outbound Sockets SEND requests
SOTOTAL	SOTotal	DFHSOCK	A	298	SOTOTCT	•	•	•	•	Socket Total requests
SOWAIT	SockWait	DFHSOCK	S	241	SOIOWTT	•	•	•	•	Inbound Socket I/O wait time
SRVCLASS	SrvClass	DFHCICS	C	167	SRVCLASS	•	•	•	•	WLM Service Class
START	Start	DFHCICS	T	005	START	•	•	•	•	Task start time
STOP	Stop	DFHCICS	T	006	STOP	•	•	•	•	Task stop time

Table 32. Cross-reference: CICS PA field name × CICS version (continued)

CICS PA field name	Column heading	CMF field Group	Type	ID	Name	CICS version 640	650	660	670	Description
STYPE	SC	DFHTASK	C	004	TTYPE	•	•	•	•	Transaction start type
SUPRREQ	SUPRREQ	OMCICS	S	018	SUPRREQ	•	•	•	•	OMEGAMON monitored Supra requests
SUPRWARN	SUPRWARN	OMCICS	C	007	SUPRWARN	•	•	•	•	OMEGAMON Supra Limit Warning
SUSPEND	Suspend	DFHTASK	S	014	SUSPTIME	•	•	•	•	Suspend time
SYNCDLY	SYNC Dly	DFHSYNC	S	196	SYNCDLY	•	•	•	•	SYNCPOINT parent request wait time
SYNCPT	SYNCPT	DFHSYNC	A	060	SPSYNCCT	•	•	•	•	SYNCPOINT requests
SYNCTIME	SYNCProc	DFHSYNC	S	173	SYNCTIME	•	•	•	•	SYNCPOINT processing time
SZALLCTO	SZAlocTO	DFHFEPI	A	157	SZALLCTO	•	•	•	•	Allocate conversation time-out count
SZALLOC	SZALLOC	DFHFEPI	A	150	SZALLOCT	•	•	•	•	Conversations allocated count
SZCHRIN	SZChrIn	DFHFEPI	A	155	SZCHRIN	•	•	•	•	FEPI characters received count
SZCHROUT	SZChrOut	DFHFEPI	A	154	SZCHROUT	•	•	•	•	FEPI characters sent count
SZRCV	SZRCV	DFHFEPI	A	151	SZRCVCT	•	•	•	•	FEPI RECEIVE requests
SZRCVTO	SZRecvTO	DFHFEPI	A	158	SZRCVTO	•	•	•	•	Receive Data time-out count
SZSEND	SZSEND	DFHFEPI	A	152	SZSENDCT	•	•	•	•	FEPI SEND requests
SZSTART	SZSTART	DFHFEPI	A	153	SZSTRTCT	•	•	•	•	FEPI START requests
SZTOTAL	SZ Total	DFHFEPI	A	159	SZTOTCT	•	•	•	•	FEPI API and SPI requests
SZWAIT	SZ Wait	DFHFEPI	S	156	SZWAIT	•	•	•	•	FEPI services wait time
T8CPU	T8 CPU	DFHTASK	S	400	T8CPUT	–	–	•	•	CICS T8 TCB CPU time
TASKCNT	#Tasks	CICSPA	X	902	TASKCNT	•	•	•	•	Total Task count
TASKNO	TaskNo	DFHTASK	P	031	TRANNUM	•	•	•	•	Transaction identification number
TASKTCNT	#TTasks	CICSPA	X	914	TASKTCNT	•	•	•	•	Total Task Termination count
TCALLOC	TCALLOC	DFHTERM	A	069	TCALLOCT	•	•	•	•	TCTTE ALLOCATE requests
TCBATTCT	TCBAtach	DFHTASK	A	251	TCBATTCT	•	•	•	•	TCBs attached count
TCC62IN2	TCC62In2	DFHTERM	A	137	TCC62IN2	•	•	•	•	LU6.2 characters received count
TCC62OU2	TCC62Ou2	DFHTERM	A	138	TCC62OU2	•	•	•	•	LU6.2 characters sent count
TCLASSNM	TCLSName	DFHTASK	C	166	TCLSNAME	•	•	•	•	Transaction Class name
TCLDELAY	TCLDelay	DFHTASK	S	126	TCLDELAY	•	•	•	•	First dispatch TCLSNAME wait time
TCM62IN2	TCM62In2	DFHTERM	A	135	TCM62IN2	•	•	•	•	LU6.2 messages received count
TCM62OU2	TCM62Ou2	DFHTERM	A	136	TCM62OU2	•	•	•	•	LU6.2 messages sent count
TCPSRVCE	TCPIPSrv	DFHSOCK	C	245	TCPSRVCE	•	•	•	•	TCP/IP Service Name
TCWAIT	TC Wait	DFHTERM	S	009	TCIOWTT	•	•	•	•	Terminal wait for input time
TDGET	TDGET	DFHDEST	A	041	TDGETCT	•	•	•	•	Transient data GET requests
TDPURGE	TDPURGE	DFHDEST	A	043	TDPURCT	•	•	•	•	Transient data PURGE requests
TDPUT	TDPUT	DFHDEST	A	042	TDPUTCT	•	•	•	•	Transient data PUT requests
TDTOTAL	TD Total	DFHDEST	A	091	TDTOTCT	•	•	•	•	Transient data Total requests
TDWAIT	TD Wait	DFHDEST	S	101	TDIOWTT	•	•	•	•	VSAM transient data I/O wait time
TERM	Term	DFHTERM	C	002	TERM	•	•	•	•	Terminal ID
TERMCNNM	ConnName	DFHTERM	C	169	TERMCNNM	•	•	•	•	Terminal session Connection name
TERMCODE	DevT	DFHTERM	A	165	TERMINFO	•	•	•	•	Terminal Device Type
TERMINFO	TermInfo	DFHTERM	A	165	TERMINFO	•	•	•	•	Terminal information
TESTDEQS	TestDEQs	DBCTL	A	020	TESTDEQS	•	•	•	•	Number of Test Dequeues
TESTENQS	TestENQs	DBCTL	A	018	TESTENQS	•	•	•	•	Number of Test Enqueues
TESTENQW	TestENQW	DBCTL	A	019	TESTENQW	•	•	•	•	Number of waits on Test Enqueues
THREDCPU	ThredCPU	DBCTL	S	032	THREDCPU	•	•	•	•	Thread TCB CPU time
TIASKTCT	ASKTimCt	DFHCICS	A	405	TIASKTCT	–	–	•	•	ASKTIME requests
TITOTCT	TITOTcT	DFHCICS	A	406	TITOTCT	–	–	•	•	ASKTIME
TOTCPU	Tot CPU	CICSPA	D	918	TOTCPU	•	•	•	•	Total Task CPU Time
TOTRECS	TotlRecs	CICSPA	A	001	TOTRECS	•	•	•	•	Cross-System Total record count
TRAN	Tran	DFHTASK	C	001	TRAN	•	•	•	•	Transaction identifier
TRANFLAG	TranFlag	DFHTASK	A	164	TRANFLAG	•	•	•	•	Transaction flags
TRANPRTY	Prty	DFHTASK	A	109	TRANPRI	•	•	•	•	Transaction priority
TRANROUT	TranRout	CICSPA	A	003	TRANROUT	•	•	•	•	Cross-System Transaction Routing records
TRANTYPE	TranType	DFHTASK	C	164	TRANFLAG	•	•	•	•	Transaction type
TRNGRPID	Group ID	DFHTASK	C	082	TRNGRPID	•	•	•	•	Transaction Group ID
TSGET	TSGET	DFHTEMP	A	044	TSGETCT	•	•	•	•	Temporary Storage GET requests
TSPUTAUX	TSPUTAux	DFHTEMP	A	046	TSPUTACT	•	•	•	•	Auxiliary TS PUT requests

Table 32. Cross-reference: CICS PA field name × CICS version (continued)

CICS PA field name	Column heading	CMF field Group	Type	ID	Name	CICS version 640	650	660	670	Description
TSPUTMCT	TSPUTMai	DFHTEMP	A	047	TSPUTMCT	•	•	•	•	Main TS PUT requests
TSQNAME	TSQ Name	CICSPA	C	917	TSQNAME	•	•	•	•	Temporary Storage Queue Name
TSSHWAIT	TSShWait	DFHTEMP	S	178	TSSHWAIT	•	•	•	•	Asynchronous Shared TS wait time
TSTOTAL	TS Total	DFHTEMP	A	092	TSTOTCT	•	•	•	•	TS Total requests
TSWAIT	TS Wait	DFHTEMP	S	011	TSIOWTT	•	•	•	•	VSAM TS I/O wait time
UE1WARN	UE1WARN	OMCICS	C	014	UE1WARN	•	•	•	•	OMEGAMON User Event Limit Warning
UOWCONTS	UOWConts	DBCTL	A	030	UOWCONTS	•	•	•	•	Number of UOW Contentions
UOWID	UOW ID	CICSPA	C	912	UOWID	•	•	•	•	Network UOW ID
UOWSEQ	UOW Seq	CICSPA	C	913	UOWSEQ	•	•	•	•	Network UOW Sequence Number
UPDTDEQS	UpdtDEQs	DBCTL	A	023	UPDTDEQS	•	•	•	•	Number of Update Dequeues
UPDTENQS	UpdtENQs	DBCTL	A	021	UPDTENQS	•	•	•	•	Number of Update Enqueues
UPDTENQW	UpdtENQW	DBCTL	A	022	UPDTENQW	•	•	•	•	Number of waits on Update Enqueues
USERID	Userid	DFHCICS	C	089	USERID	•	•	•	•	User ID
USREVNT	USREVNT	OMCICS	S	020	USREVNT	•	•	•	•	OMEGAMON User defined events
VSAMWARN	VSAMWARN	OMCICS	C	003	VSAMWARN	•	•	•	•	OMEGAMON VSAM Limit warning
WAITCICS	CICSWait	DFHTASK	S	182	WTCEWAIT	•	•	•	•	CICS ECB wait time
WAITEXT	Ext Wait	DFHTASK	S	181	WTEXWAIT	•	•	•	•	External ECB wait time
WBATMSNM	ATOMSrvc	DFHWEBB	C	382	WBATMSNM	–	–	•	•	ATOMSERVICE resource definition name
WBBROWSE	WBBROWSE	DFHWEBB	A	239	WBBRWCT	•	•	•	•	Web Browse requests
WBBRWOCT	WBBRWOCT	DFHWEBB	A	338	WBBRWOCT	•	•	•	•	CICS Web Support BROWSE HTTPHEADER requests
WBCHRIN	WBChrIn	DFHWEBB	A	232	WBCHRIN	•	•	•	•	Web characters received count
WBCHRIN1	WBCHRIN1	DFHWEBB	A	334	WBCHRIN1	•	•	•	•	CICS Web Support RECEIVE and CONVERSE chars
WBCHROU1	WBCHROU1	DFHWEBB	A	336	WBCHROU1	•	•	•	•	CICS Web Support SEND and CONVERSE chars
WBCHROUT	WBChrOut	DFHWEBB	A	234	WBCHROUT	•	•	•	•	Web characters sent count
WBEXTRCT	WBEXTRAC	DFHWEBB	A	238	WBEXTRCT	•	•	•	•	Web EXTRACT requests
WBISSFCT	ISSOAPFt	DFHWEBB	A	388	WBISSFCT	–	–	•	•	INVOKE SERVICE request SOAP faults received
WBIWBSCT	WBIWBSCT	DFHWEBB	A	340	WBIWBSCT	•	•	•	•	INVOKE SERVICE and INVOKE WEBSERVICE requests
WBPARSCT	WBPARSCT	DFHWEBB	A	337	WBPARSCT	•	•	•	•	CICS Web Support PARSE URL requests
WBPIPLNM	Pipeline	DFHWEBB	C	381	WBPIPLNM	–	–	•	•	PIPELINE resource definition name
WBPROGNM	Web Prog	DFHWEBB	C	385	WBPROGNM	–	–	•	•	Program name in URIMAP resource definition
WBRCV	WBRCV	DFHWEBB	A	231	WBRCVCT	•	•	•	•	Web RECEIVE requests
WBRCVIN1	WBRCVIN1	DFHWEBB	A	333	WBRCVIN1	•	•	•	•	CICS Web Support RECEIVE and CONVERSE requests
WBREAD	WB READ	DFHWEBB	A	224	WBREADCT	•	•	•	•	Web READ requests
WBREDOCT	WBREDOCT	DFHWEBB	A	331	WBREDOCT	•	•	•	•	CICS Web Support READ HTTPHEADER requests
WBREPRCT	WBRepoRd	DFHWEBB	A	236	WBREPRCT	•	•	•	•	Web Temporary Storage Repository read requests
WBREPRDL	WBREPRDL	DFHWEBB	A	341	WBREPRDL	•	•	•	•	Repository Read data length
WBREPWCT	WBRepoWr	DFHWEBB	A	237	WBREPWCT	•	•	•	•	Web Temporary Storage Repository write requests
WBREPWDL	WBREPWDL	DFHWEBB	A	342	WBREPWDL	•	•	•	•	Repository Write data length
WBSEND	WBSEND	DFHWEBB	A	233	WBSENDCT	•	•	•	•	Web SEND requests
WBSFCRCT	SOAPFtCr	DFHWEBB	A	386	WBSFCRCT	–	–	•	•	SOAPFAULT CREATE requests
WBSFTOCT	SOAPFalt	DFHWEBB	A	387	WBSFTOCT	–	–	•	•	SOAPFAULT ADD
WBSNDOU1	WBSNDOU1	DFHWEBB	A	335	WBSNDOU1	•	•	•	•	CICS Web Support SEND and CONVERSE requests
WBSREQBL	SOAPRqBL	DFHWEBB	A	390	WBSREQBL	–	–	•	•	SOAP request SOAP body length
WBSRSPBL	SOAPRsBL	DFHWEBB	A	392	WBSRSPBL	–	–	•	•	SOAP response SOAP body length
WBSVCENM	WebSrvc	DFHWEBB	C	383	WBSVCENM	–	–	•	•	WEBSERVICE resource definition name
WBSVOPNM	WebSrvOp	DFHWEBB	C	384	WBSVOPNM	–	–	•	•	WEBSERVICE operation name
WBTOTAL	WB Total	DFHWEBB	A	235	WBTOTWCT	•	•	•	•	Web Total requests
WBURIMNM	URI Map	DFHWEBB	C	380	WBURIMNM	–	–	•	•	URIMAP resource definition name
WBWRITE	WB WRITE	DFHWEBB	A	225	WBWRITCT	•	•	•	•	Web WRITE requests
WBWRTOCT	WBWRTOCT	DFHWEBB	A	332	WBWRTOCT	•	•	•	•	CICS Web Support WRITE HTTPHEADER requests
WMQASRBT	WMQSRBtm	DFHDATA	S	397	WMQASRBT	–	–	•	•	WebSphere MQ API SRB CPU time

Table 32. Cross-reference: CICS PA field name × CICS version (continued)

CICS PA field name	Column heading	CMF field Group	Type	ID	Name	CICS version 640	650	660	670	Description
WMQGETWT	WMQGetWt	DFHDATA	S	396	WMQGETWT	–	•	•	•	WebSphere MQ GETWAIT wait time
WMQREQCT	WMQ Reqs	DFHDATA	A	395	WMQREQCT	–	•	•	•	Number of WebSphere MQ requests
WSACBLCT	WSACBld	DFHWEBB	A	420	WSACBLCT	–	–	•	•	WSACONTEXT BUILD requests
WSACGTCT	WSACGet	DFHWEBB	A	421	WSACGTCT	–	–	•	•	WSACONTEXT GET requests
WSAEPCCT	WSAEPCre	DFHWEBB	A	422	WSAEPCCT	–	–	•	•	WSAEPR CREATE requests
WSATOTCT	WSAddr	DFHWEBB	A	423	WSATOTCT	–	–	•	•	Total Web Services Addressing requests
X8CPU	X8 CPU	DFHTASK	S	271	X8CPUT	•	•	•	•	CICS X8 TCB CPU time
X9CPU	X9 CPU	DFHTASK	S	272	X9CPUT	•	•	•	•	User task X9 Mode CPU time

Chapter 17. Fields by forms, HDB templates

The following cross-reference table lists the CICS PA field names for CICS monitoring facility (CMF) performance class and transaction resource class data and shows the report forms and HDB templates to which they apply.

Some columns in the table require explanation:

CICS PA field name
The name used in report forms, HDB templates, and selection criteria (and their corresponding batch command operands FIELDS and SELECT).

A blank indicates that the field is not available, typically because it is a very long field, or it is an unprintable field such as a unit-of-work or a flag.

Report form and HDB template
The report forms and HDB templates to which a field applies:
- • Yes, the field applies
- **S** Yes, the field applies and is an eligible sort field (in a report form) or key field (in an HDB template)
- **–** No, the field does not apply

Type Indicates the data type of the field:
- **A** 32-bit or 64-bit count
- **C** Character string
- **D** Time derived by CICS PA
- **P** Packed decimal integer
- **S** Clock
- **T** STCK time stamp
- **X** Count calculated by CICS PA

Length
The default length in the output report or data set.

Clock (S) fields have two components, each of length 8:
COUNT
Number of occurrences
TIME Elapsed time in seconds with specified precision 0.0001 - 0.000001, default format *sss.thmi*

Time Stamp (T) fields vary in length (5 - 19) depending on the specified format:
TIMET
Time in the format *hh:mm:ss.thm*
TIMEM
Time in the format *hh:mm*
TIMES
Time in the format *hh:mm:ss*
DATE Date in the format *mm/dd/yyyy*
DATEISO
Date in the format *yyyy-mm-dd*
DATEM
Date in the format *mm/dd*
DATEYR
Date in the format *mm/dd/yy*

DATETIM
Date and time in the format *yyyy-mm-dd hh:mm:ss*

Note:

1. Some special fields, such as APPLID and RESPONSE, are not defined in the CMF Dictionary and are given a group name of "CICSPA". These fields are either derived from the fixed section of the CMF record (for example, APPLID), or calculated from two or more other CMF fields (for example, RESPONSE).
2. The FILENAME, TSQNAME, and DPLNAME fields are only available when CMF transaction resource class data is being collected.
3. The APPLTRAN and APPLPROG fields are only available when application programs invoke the application naming event monitoring points.

Table 33. Cross-reference: fields × forms, HDB templates

	CMF field				Report form			HDB template		
CICS PA field name	Group	Type	ID	Length	LIST	LISTX	SUMMARY	LIST	SUMMARY	Description
	DFHCBTS	C	202	52	–	–	–	–	–	BTS Root Activity identifier
	DFHCBTS	C	203	52	–	–	–	–	–	BTS Activity identifier
	DFHTASK	C	064	4	–	–	–	–	–	Task error flags
	DFHTASK	C	132	8	–	–	–	–	–	Recovery UOW ID
	DFHTASK	C	190	16	–	–	–	–	–	RRMS/MVS unit-of-recovery ID (URID)
ABCODEC	DFHPROG	C	114	4	•	S	S	•	S	Current ABEND code
ABCODEO	DFHPROG	C	113	4	•	S	S	•	S	Original ABEND Code
ACCMETH	DFHTERM	A	165	4	•	S	–	•	–	Terminal Access Method
ACTVTYNM	DFHCBTS	C	204	16	•	S	–	•	–	BTS Activity name
ADABREQ	OMCICS	S	017	8	•	S	•	•	•	OMEGAMON monitored Adabas requests
ADABWARN	OMCICS	C	005	4	•	S	S	•	S	OMEGAMON Adabas Limit Warning
ALERT	CICSPA	A	915	8	–	–	•	–	–	Total Alert count or percentage
APPLID	CICSPA	C	903	8	•	S	S	S	S	CICS Generic APPLID
APPLPROG	DFHAPPL	C	001	8	•	S	S	•	S	Application naming Program
APPLRECS	CICSPA	A	002	8	•	•	•	•	•	Cross-System Application records
APPLTRAN	DFHAPPL	C	001	4	•	S	S	•	S	Application naming Tran ID
BAACDCCT	DFHCBTS	A	217	4	•	S	•	•	•	BTS Activity Data Containers requests
BAACQPCT	DFHCBTS	A	214	4	•	S	•	•	•	BTS Acquire Process/Activity requests
BADACTCT	DFHCBTS	A	209	4	•	S	•	•	•	BTS Define Activity requests
BADCPACT	DFHCBTS	A	213	4	•	S	•	•	•	BTS Cancel Process/Activity requests
BADFIECT	DFHCBTS	A	220	4	•	S	•	•	•	BTS Define-Input Event requests
BADPROCT	DFHCBTS	A	208	4	•	S	•	•	•	BTS Define Process requests
BALKPACT	DFHCBTS	A	207	4	•	S	•	•	•	BTS Link Process/Activity count
BAPRDCCT	DFHCBTS	A	216	4	•	S	•	•	•	BTS Process Data Containers requests
BARASYCT	DFHCBTS	A	206	4	•	S	•	•	•	BTS asynchronous Process/Activity count
BARATECT	DFHCBTS	A	219	4	•	S	•	•	•	BTS Retrieve-Reattach Event requests
BARMPACT	DFHCBTS	A	212	4	•	S	•	•	•	BTS Resume Process/Activity requests
BARSPACT	DFHCBTS	A	210	4	•	S	•	•	•	BTS Reset Process/Activity requests
BARSYNCT	DFHCBTS	A	205	4	•	S	•	•	•	BTS synchronous Process/Activity count
BASUPACT	DFHCBTS	A	211	4	•	S	•	•	•	BTS Suspend Process/Activity requests
BATIAECT	DFHCBTS	A	221	4	•	S	•	•	•	BTS TIMER Event requests
BATOTCCT	DFHCBTS	A	218	4	•	S	•	•	•	BTS Process/Activity Data Container requests
BATOTECT	DFHCBTS	A	222	4	•	S	•	•	•	BTS Event-related requests
BATOTPCT	DFHCBTS	A	215	4	•	S	•	•	•	BTS Total Process/Activity requests
BFDGSTCT	DFHCICS	A	408	4	•	S	•	•	•	Built-in function BIF DIGEST requests
BFTOTCT	DFHCICS	A	409	4	•	S	•	•	•	Total Built-in (BIF) function requests
BMSIN	DFHMAPP	A	051	4	•	S	•	•	•	BMS IN requests

Table 33. Cross-reference: fields × forms, HDB templates (continued)

CMF field					Report form			HDB template		
CICS PA field name	**Group**	**Type**	**ID**	**Length**	**LIST**	**LISTX**	**SUMMARY**	**LIST**	**SUMMARY**	**Description**
BMSMAP	DFHMAPP	A	050	4	•	S	•	•	•	BMS MAP requests
BMSOUT	DFHMAPP	A	052	4	•	S	•	•	•	BMS OUT requests
BMSTOTAL	DFHMAPP	A	090	4	•	S	•	•	•	BMS Total requests
BRDGTRAN	DFHTASK	C	124	4	•	S	–	•	–	Bridge Listener Transaction ID
CALLWARN	OMCICS	C	013	4	•	S	S	•	S	OMEGAMON EXEC Calls Limit Warning
CBSRVRNM	DFHEJBS	C	311	4	•	S	S	S	S	CorbaServer name
CFCAPICT	DFHCICS	A	025	4	•	S	•	•	•	OO Foundation Class requests
CFDTSYNC	DFHSYNC	S	177	8	•	S	•	•	•	CF Data Table syncpoint wait time
CFDTWAIT	DFHFILE	S	176	8	•	S	•	•	•	CF Data Table access requests wait time
CHARIN1	DFHTERM	A	083	4	•	S	•	•	•	Terminal characters received count
CHARIN2	DFHTERM	A	085	4	•	S	•	•	•	LU6.1 characters received count
CHAROUT1	DFHTERM	A	084	4	•	S	•	•	•	Terminal characters sent count
CHAROUT2	DFHTERM	A	086	4	•	S	•	•	•	LU6.1 characters sent count
CLIENTIP	DFHSOCK	C	244	16	•	S	–	•	–	Client or Telnet IP address
CLIP6ADR	DFHSOCK	C	318	40	•	S	–	•	–	Client or Telnet IP address
CLIPPORT	DFHSOCK	A	330	4	•	S	–	•	–	Client IP Port Number
COMMWAIT	CICSPA	D	906	8	•	S	–	•	–	Communications wait time
CPU	DFHTASK	S	008	8	•	S	•	•	•	CPU time
CPUWARN	OMCICS	C	009	4	•	S	S	•	S	OMEGAMON CPU Limit Warning
DB2CONWT	DFHDATA	S	188	8	•	S	•	•	•	DB2 Connection wait time
DB2RDYQW	DFHDATA	S	187	8	•	S	•	•	•	DB2 Thread wait time
DB2REQCT	DFHDATA	A	180	8	•	S	•	•	•	DB2 requests
DB2WAIT	DFHDATA	S	189	8	•	S	•	•	•	DB2 SQL/IFI wait time
DB2WARN	OMCICS	C	001	4	•	S	S	•	S	OMEGAMON DB2 Limit Warning
DBGETS	DBCTL	A	035	8	•	S	•	•	•	Number of Database Get calls issued
DBIOCALL	DBCTL	A	007	8	•	S	•	•	•	Number of Database I/Os
DBIOELAP	DBCTL	S	005	8	•	S	•	•	•	Elapsed time for Database I/O
DBUPDATE	DBCTL	A	036	8	•	S	•	•	•	Number of Database Update calls issued
DBWAITS	DBCTL	A	037	8	•	S	•	•	•	Number of Database waits
DCOMREQ	OMCICS	S	019	8	•	S	•	•	•	OMEGAMON monitored CA-Datacom requests
DCOMWARN	OMCICS	C	008	4	•	S	S	•	S	OMEGAMON CA-Datacom Limit Warning
DEDBBFRW	DBCTL	A	031	8	•	S	•	•	•	Number of waits for DEDB buffers
DEDBCALL	DBCTL	A	027	8	•	S	•	•	•	Number of DEDB calls
DEDBRDOP	DBCTL	A	028	8	•	S	•	•	•	Number of DEDB read operations
DHCREATE	DFHDOCH	A	226	4	•	S	•	•	•	Document Handler CREATE requests
DHDELETE	DFHDOCH	A	223	4	•	S	•	•	•	Document Handler DELETE requests
DHINSERT	DFHDOCH	A	227	4	•	S	•	•	•	Document Handler INSERT requests
DHRETRVE	DFHDOCH	A	229	4	•	S	•	•	•	Document Handler RETRIEVE requests
DHSET	DFHDOCH	A	228	4	•	S	•	•	•	Document Handler SET requests
DHTOTAL	DFHDOCH	A	230	4	•	S	•	•	•	Document Handler Total requests
DHTOTDCL	DFHDOCH	A	240	4	•	S	•	•	•	Total length of all documents created
DISPATCH	DFHTASK	S	007	8	•	S	•	•	•	Dispatch time
DISPWAIT	DFHTASK	S	102	8	•	S	•	•	•	Redispatch wait time
DLETCALL	DBCTL	A	015	8	•	S	•	•	•	Number of Database DLET calls issued
DLICALLS	DBCTL	A	017	8	•	S	•	•	•	Total DL/I Database calls
DLIWARN	OMCICS	C	002	4	•	S	S	•	S	OMEGAMON DLI Limit Warning
DPLNAME	CICSPA	C	919	8	–	–	–	–	–	Distributed program link name
DPLRECS	CICSPA	A	005	8	•	•	•	•	•	Cross-System DPL records
DSAWARN	OMCICS	C	011	4	•	S	S	•	S	OMEGAMON DSA Limit Warning
DSCHMDLY	DFHTASK	S	247	8	•	S	•	•	•	Redispatch wait time caused by change-TCB mode
DSMMSCWT	DFHTASK	S	279	8	•	S	•	•	•	DS storage constraint wait time
DSPDELAY	DFHTASK	S	125	8	•	S	•	•	•	First dispatch wait time

Table 33. Cross-reference: fields × forms, HDB templates (continued)

CICS PA field name	CMF field: Group	CMF field: Type	CMF field: ID	Length	Report form: LIST	Report form: LISTX	Report form: SUMMARY	HDB template: LIST	HDB template: SUMMARY	Description
DSTCBHWM	DFHTASK	A	252	4	•	S	•	•	•	CICS Dispatcher TCB HWM
DSTCBMWT	DFHTASK	S	268	8	•	S	•	•	•	Dispatcher TCB Mismatch wait time
ECEFOPCT	DFHCICS	A	416	4	•	S	•	•	•	Event Filter operations
ECEVNTCT	DFHCICS	A	417	4	•	S	•	•	•	Events captured
ECSEVCCT	DFHCICS	A	418	4	•	S	•	•	•	Synchronous Emission Events captured
ECSIGECT	DFHCICS	A	415	4	•	S	•	•	•	SIGNAL EVENT requests
EDSAWARN	OMCICS	C	012	4	•	S	S	•	S	OMEGAMON EDSA Limit Warning
EICTOTCT	DFHCICS	A	402	4	•	S	•	•	•	EXEC CICS requests
EJBACTIV	DFHEJBS	A	312	4	•	S	•	•	•	Number of Bean State Activation requests
EJBCREAT	DFHEJBS	A	314	4	•	S	•	•	•	Number of Bean Creation requests
EJBMETHD	DFHEJBS	A	316	4	•	S	•	•	•	Number of EJB Method Calls
EJBPASIV	DFHEJBS	A	313	4	•	S	•	•	•	Number of Bean State Passivation requests
EJBREMOV	DFHEJBS	A	315	4	•	S	•	•	•	Number of Bean Removal requests
EJBTOTAL	DFHEJBS	A	317	4	•	S	•	•	•	Total Number of EJB requests
ELAPWARN	OMCICS	C	010	4	•	S	S	•	S	OMEGAMON Elapsed Time Limit Warning
ENQDELAY	DFHTASK	S	129	8	•	S	•	•	•	Local Enqueue wait time
ERRFLAGS	DFHTASK	A	064	4	•	•	–	•	–	Task error flags
EXCLDEQS	DBCTL	A	026	8	•	S	•	•	•	Number of Exclusive Dequeues
EXCLENQS	DBCTL	A	024	8	•	S	•	•	•	Number of Exclusive Enqueues
EXCLENQW	DBCTL	A	025	8	•	S	•	•	•	Number of waits on Exclusive Enqueues
EXWAIT	DFHCICS	S	103	8	•	S	•	•	•	Exception Conditions wait time
FCADD	DFHFILE	A	039	4	•	S	•	•	•	File ADD requests
FCAMCT	DFHFILE	A	070	4	•	S	•	•	•	File access-method requests
FCBROWSE	DFHFILE	A	038	4	•	S	•	•	•	File Browse requests
FCDELETE	DFHFILE	A	040	4	•	S	•	•	•	File DELETE requests
FCGET	DFHFILE	A	036	4	•	S	•	•	•	File GET requests
FCPUT	DFHFILE	A	037	4	•	S	•	•	•	File PUT requests
FCTOTAL	DFHFILE	A	093	4	•	S	•	•	•	File Control requests
FCTY	DFHTASK	C	163	4	•	S	S	•	S	Transaction Facility name
FCTYTYPE	DFHTASK	A	164	4	•	S	–	•	–	Transaction facility type
FCWAIT	DFHFILE	S	063	8	•	S	•	•	•	File I/O wait time
FILENAME	CICSPA	C	916	8	–	–	–	–	–	File name
FUNCSHIP	CICSPA	A	004	8	•	•	•	•	•	Cross-System Function Shipping records
GHNCALL	DBCTL	A	012	8	•	S	•	•	•	Number of Database GHN calls issued
GHNPCALL	DBCTL	A	013	8	•	S	•	•	•	Number of Database GHNP calls issued
GHUCALL	DBCTL	A	011	8	•	S	•	•	•	Number of Database GHU calls issued
GIVEUPWT	DFHTASK	S	184	8	•	S	•	•	•	Give up control wait time
GNCALL	DBCTL	A	009	8	•	S	•	•	•	Number of Database GN calls issued
GNPCALL	DBCTL	A	010	8	•	S	•	•	•	Number of Database GNP calls issued
GNQDELAY	DFHTASK	S	123	8	•	S	•	•	•	Global Enqueue wait time
GUCALL	DBCTL	A	008	8	•	S	•	•	•	Number of Database GU calls issued
ICDELAY	DFHTASK	S	183	8	•	S	•	•	•	Interval Control (IC) wait time
ICPUT	DFHTASK	A	059	4	•	S	•	•	•	Interval Control START or INITIATE requests
ICSTACCT	DFHTASK	A	065	8	•	S	•	•	•	Local IC START requests with CHANNEL option
ICSTACDL	DFHTASK	A	345	8	•	S	•	•	•	Container data len for Local IC START w/ CHANNEL
ICSTRCCT	DFHTASK	A	346	8	•	S	•	•	•	Remote IC START requests with CHANNEL option
ICSTRCDL	DFHTASK	A	347	8	•	S	•	•	•	Container data len for Remot IC START w/ CHANNEL
ICTOTAL	DFHTASK	A	066	4	•	S	•	•	•	Interval Control requests
IDMSREQ	OMCICS	S	016	8	•	S	•	•	•	OMEGAMON monitored CA-IDMS requests
IDMSWARN	OMCICS	C	006	4	•	S	S	•	S	OMEGAMON CA-IDMS Limit Warning
IMSREQCT	DFHDATA	A	179	4	•	S	•	•	•	IMS (DBCTL) requests
IMSWAIT	DFHDATA	S	186	8	•	S	•	•	•	IMS (DBCTL) wait time

Table 33. Cross-reference: fields × forms, HDB templates (continued)

CMF field					Report form			HDB template		
CICS PA field name	Group	Type	ID	Length	LIST	LISTX	SUMMARY	LIST	SUMMARY	Description
INTCWAIT	DBCTL	S	003	8	•	S	•	•	•	Elapsed wait time for Intent Conflict
IOWAIT	CICSPA	D	907	8	•	S	–	•	–	Total IO wait time
IRESP	CICSPA	D	908	8	•	S	•	–	•	Transaction internal response time
IRWAIT	DFHTERM	S	100	8	•	S	•	•	•	MRO link wait time
ISALLOC	DFHSOCK	A	288	4	•	S	•	•	•	Allocate Session requests for sessions on IP
ISIPICNM	DFHSOCK	C	305	8	•	S	S	•	S	Name of IPCONN definition that attached the task
ISRTCALL	DBCTL	A	014	8	•	S	•	•	•	Number of Database ISRT calls issued
ISWAIT	DFHSOCK	S	300	8	•	S	•	•	•	IPCONN link wait time
J8CPU	DFHTASK	S	260	8	•	S	•	•	•	CICS J8 TCB CPU time
J9CPU	DFHTASK	S	267	8	•	S	•	•	•	User task J9 Mode CPU time
JCWAIT	DFHJOUR	S	010	8	•	S	•	•	•	Journal I/O wait time
JNLPUT	DFHJOUR	A	058	4	•	S	•	•	•	Journal write requests
JOBNAME	CICSPA	C	905	8	•	S	S	•	S	Job Name
JVMITIME	DFHTASK	S	273	8	•	S	•	•	•	JVM initialize elapsed time
JVMMTIME	CICSPA	D	910	8	•	S	•	•	•	JVM Method time
JVMRTIME	DFHTASK	S	275	8	•	S	•	•	•	JVM reset elapsed time
JVMSUSP	DFHTASK	S	254	8	•	S	•	•	•	JVM suspend time
JVMTHDWT	DFHTASK	S	401	8	•	S	•	•	•	JVM server thread wait time
JVMTIME	DFHTASK	S	253	8	•	S	•	•	•	JVM elapsed time
KY8CPU	DFHTASK	S	263	8	•	S	•	•	•	CICS Key 8 TCB CPU time
KY8DISPT	DFHTASK	S	262	8	•	S	•	•	•	CICS Key 8 TCB dispatch time
KY9CPU	DFHTASK	S	265	8	•	S	•	•	•	User task Key 9 Mode CPU time
KY9DISPT	DFHTASK	S	264	8	•	S	•	•	•	User task Key 9 Mode Dispatch time
L8CPU	DFHTASK	S	259	8	•	S	•	•	•	CICS L8 TCB CPU time
L9CPU	DFHTASK	S	266	8	•	S	•	•	•	User task L9 CPU time
LOCKDLAY	DFHTASK	S	128	8	•	S	•	•	•	Lock Manager (LM) wait time
LOGWRITE	DFHJOUR	A	172	4	•	S	•	•	•	Log Stream write requests
LU61WAIT	DFHTERM	S	133	8	•	S	•	•	•	LU6.1 wait time
LU62WAIT	DFHTERM	S	134	8	•	S	•	•	•	LU6.2 wait time
LUNAME	DFHTERM	C	111	8	•	S	S	•	S	VTAM logical unit name
MAXHTDLY	DFHTASK	S	278	8	•	S	•	•	•	Maximum Hot-Pooling TCB delay time
MAXJTDLY	DFHTASK	S	277	8	•	S	•	•	•	Maximum JVM TCB delay time
MAXOTDLY	DFHTASK	S	250	8	•	S	•	•	•	Maximum Open TCB delay time
MAXSTDLY	DFHTASK	S	281	8	•	S	•	•	•	Maximum SSL TCB delay time
MAXTTDLY	DFHTASK	S	283	8	•	S	•	•	•	Maximum JVM server thread TCB delay time
MAXXTDLY	DFHTASK	S	282	8	•	S	•	•	•	Maximum XPLink TCB delay time
MLXMLTCT	DFHWEBB	A	413	4	•	S	•	•	•	Application data TRANSFORM requests
MLXSSCTM	DFHWEBB	S	411	8	•	S	•	•	•	z/OS XML System Services CPU time
MLXSSTDL	DFHWEBB	A	412	4	•	S	•	•	•	Document length parsed - z/OS System Services
MQWARN	OMCICS	C	004	4	•	S	S	•	S	OMEGAMON MQ Limit Warning
MSCPU	DFHTASK	S	258	8	•	S	•	•	•	CICS TCBs CPU time
MSDISPT	DFHTASK	S	257	8	•	S	•	•	•	CICS TCBs dispatch time
MSGIN1	DFHTERM	A	034	4	•	S	•	•	•	Messages received count
MSGIN2	DFHTERM	A	067	4	•	S	•	•	•	Messages received from LU6.1
MSGOUT1	DFHTERM	A	035	4	•	S	•	•	•	Messages sent count
MSGOUT2	DFHTERM	A	068	4	•	S	•	•	•	Messages sent to LU6.1
MVSID	CICSPA	C	904	4	•	S	S	S	S	MVS SMF ID
MXTDELAY	DFHTASK	S	127	8	•	S	•	•	•	First dispatch MXT wait time
NATURE	DFHTERM	A	165	4	•	S	–	•	–	Transaction
NETID	DFHTERM	C	197	8	•	S	–	•	–	VTAM LUALIAS Network ID
NETNAME	DFHTASK	C	097	20	•	S	–	•	–	Originating System VTAM network name
NETUOWSX	DFHTASK	C	098	8	–	–	–	–	–	Network UOW ID

Table 33. Cross-reference: fields × forms, HDB templates (continued)

	CMF field				Report form			HDB template		
CICS PA field name	Group	Type	ID	Length	LIST	LISTX	SUMMARY	LIST	SUMMARY	Description
OADATA1	DFHCICS	C	352	64	•	S	S	•	S	Originating Adapter data 1
OADATA2	DFHCICS	C	353	64	•	S	S	•	S	Originating Adapter data 2
OADATA3	DFHCICS	C	354	64	•	S	S	•	S	Originating Adapter data 3
OADID	DFHCICS	C	351	64	•	S	S	•	S	Originating Adapter Identifier
OAPPLID	DFHCICS	C	360	8	•	S	S	•	S	Originating CICS APPLID
OCLI6ADR	DFHCICS	C	372	40	•	S	–	•	–	Originating Client or Telnet IP address
OCLINTIP	DFHCICS	C	368	16	•	S	–	•	–	Originating Client or Telnet IP address
OCLIPORT	DFHCICS	A	369	4	•	S	–	•	–	Originating Client IP Port Number
OFCTY	DFHCICS	C	371	8	•	S	S	•	S	Originating Transaction Facility name
OFCTYTYP	DFHCICS	A	370	4	•	S	–	•	–	Originating Transaction Facility Type
OMEGWORK	OMCICS	C	015	32	•	S	S	•	S	OMEGAMON User work area
ONETWKID	DFHCICS	C	359	8	•	S	S	•	S	Originating Network ID
OORIGIN	DFHCICS	C	370	8	•	S	S	•	S	Originating Transaction Origin type
OPORT	DFHCICS	A	367	4	•	S	–	•	–	Originating TCP/IP Port Number
ORIGIN	DFHTASK	C	164	8	•	S	S	•	S	Transaction origin type
OSLATNCY	CICSPA	D	920	8	•	S	•	•	•	Task start latency since Origin task start
OSOWAIT	DFHSOCK	S	299	8	•	S	•	•	•	Outbound Socket I/O Wait Time
OSTART	DFHCICS	T	361	8	•	S	S	•	S	Originating Task start time
OTASKNO	DFHCICS	P	362	4	•	S	–	•	–	Originating Transaction number
OTCPSRVC	DFHCICS	C	366	8	•	S	S	•	S	Originating TCP/IP Service Name
OTRAN	DFHCICS	C	363	4	•	S	S	•	S	Originating Transaction identifier
OTRANFLG	DFHCICS	A	370	16	•	S	–	•	–	Originating Transaction flags
OTRANTYP	DFHCICS	C	370	8	•	•	–	•	–	Originating Transaction type
OTSID	DFHTASK	C	194	128	–	–	–	–	–	OTS Transaction ID
OTSINDWT	DFHSYNC	S	199	8	•	S	•	•	•	OTS Indoubt Wait time
OUSERCOR	DFHCICS	C	365	64	•	S	S	•	S	Originating User Correlator
OUSERID	DFHCICS	C	364	8	•	S	S	•	S	Originating User ID
OVFLBFRU	DBCTL	A	029	8	•	S	•	•	•	Number of Overflow Buffers used
PC24BHWM	DFHSTOR	A	108	4	•	S	•	•	•	Program Storage HWM below 16MB
PC24CHWM	DFHSTOR	A	143	4	•	S	•	•	•	Program Storage (CDSA) HWM below 16MB
PC24RHWM	DFHSTOR	A	162	4	•	S	•	•	•	Program Storage (RDSA) HWM below 16MB
PC24SHWM	DFHSTOR	A	160	4	•	S	•	•	•	Program Storage (SDSA) HWM below 16MB
PC31AHWM	DFHSTOR	A	139	4	•	S	•	•	•	Program Storage HWM above 16MB
PC31CHWM	DFHSTOR	A	142	4	•	S	•	•	•	Program Storage (ECDSA) HWM above 16MB
PC31RHWM	DFHSTOR	A	122	4	•	S	•	•	•	Program Storage (ERDSA) HWM above 16MB
PC31SHWM	DFHSTOR	A	161	4	•	S	•	•	•	Program Storage (ESDSA) HWM above 16MB
PCDLCRDL	DFHPROG	A	287	8	•	S	•	•	•	Container data length for DPL RETURN w/ CHANNEL
PCDLCSDL	DFHPROG	A	286	8	•	S	•	•	•	Container data length for DPL reqs with CHANNEL
PCDPL	DFHPROG	A	073	4	•	S	•	•	•	Distributed Program Link (DPL) requests
PCDPLCCT	DFHPROG	A	308	8	•	S	•	•	•	DPL requests with CHANNEL option
PCLINK	DFHPROG	A	055	4	•	S	•	•	•	Program LINK requests
PCLNKCCT	DFHPROG	A	306	8	•	S	•	•	•	LINK requests with CHANNEL option
PCLOAD	DFHPROG	A	057	4	•	S	•	•	•	Program LOAD requests
PCLOADTM	DFHPROG	S	115	8	•	S	•	•	•	Program Library wait time
PCLURM	DFHPROG	A	072	4	•	S	•	•	•	Program LINK URM requests
PCRTNCCT	DFHPROG	A	309	8	•	S	•	•	•	Program RETURN requests with CHANNEL option
PCRTNCDL	DFHPROG	A	310	8	•	S	•	•	•	Container data length for RETURN with CHANNEL
PCSTGHWM	DFHSTOR	A	087	4	•	S	•	•	•	Program Storage HWM above and below 16MB
PCXCLCCT	DFHPROG	A	307	8	•	S	•	•	•	XCTL requests with CHANNEL option
PCXCTL	DFHPROG	A	056	4	•	S	•	•	•	Program XCTL requests
PGBRWCCT	DFHCHNL	A	322	8	•	S	•	•	•	BROWSE CHANNEL CONTAINER requests
PGCRECCT	DFHCHNL	A	328	8	•	S	•	•	•	Number of Containers created

Table 33. Cross-reference: fields × forms, HDB templates (continued)

CMF field					Report form			HDB template		
CICS PA field name	Group	Type	ID	Length	LIST	LISTX	SUMMARY	LIST	SUMMARY	Description
PGCSTHWM	DFHCHNL	A	329	4	•	S	–	•	–	Maximum Container Storage allocated to task
PGGETCCT	DFHCHNL	A	323	8	•	S	•	•	•	GET CHANNEL CONTAINER requests
PGGETCDL	DFHCHNL	A	326	8	•	S	•	•	•	GET CHANNEL CONTAINER data length
PGMOVCCT	DFHCHNL	A	325	8	•	S	•	•	•	MOVE CHANNEL CONTAINER requests
PGPUTCCT	DFHCHNL	A	324	8	•	S	•	•	•	PUT CHANNEL CONTAINER requests
PGPUTCDL	DFHCHNL	A	327	8	•	S	•	•	•	PUT CHANNEL CONTAINER data length
PGTOTCCT	DFHCHNL	A	321	8	•	S	•	•	•	Total number of CHANNEL CONTAINER requests
PHAPPLID	DFHCICS	C	374	8	•	S	S	•	S	Previous Hop Data APPLID
PHCOUNT	DFHCICS	A	378	4	•	S	•	•	•	Previous Hop Data Count
PHLATNCY	CICSPA	D	921	8	•	S	•	•	•	Previous Hop latency time
PHNTWKID	DFHCICS	C	373	8	•	S	S	•	S	Previous Hop Data Network ID
PHSTART	DFHCICS	T	375	8	•	S	–	•	–	Previous Hop Data Task Start
PHTASKNO	DFHCICS	P	376	4	•	S	–	•	–	Previous Hop Data Transaction Number
PHTRAN	DFHCICS	C	377	4	•	S	S	•	S	Previous Hop Data Transaction ID
PILOCKEL	DBCTL	S	006	8	•	S	•	•	•	Elapsed time for PI Locking
POOLWAIT	DBCTL	S	002	8	•	S	•	•	•	Elapsed wait time for Pool Space
PORT	DFHSOCK	A	246	8	•	S	–	•	–	TCP/IP Port Number
PRCSNAME	DFHCBTS	C	200	36	•	•	–	•	–	BTS Process name
PRCSTYPE	DFHCBTS	C	201	8	•	•	S	•	S	BTS Process type
PROGRAM	DFHPROG	C	071	8	•	S	S	S	S	Program name
PSBNAME	DBCTL	C	001	8	•	S	S	S	S	PSB Name
PTPWAIT	DFHTASK	S	285	8	•	S	•	•	•	3270 Bridge Partner wait time
QRCPU	DFHTASK	S	256	8	•	S	•	•	•	CICS QR TCB CPU time
QRDISPT	DFHTASK	S	255	8	•	S	•	•	•	CICS QR TCB dispatch time
QRMODDLY	DFHTASK	S	249	8	•	S	•	•	•	CICS QR TCB redispatch wait time
RECCOUNT	DFHCICS	A	131	4	•	S	•	•	•	Task Performance record count
RELEASE	CICSPA	C	909	4	•	S	S	•	S	CICS release
REPLCALL	DBCTL	A	016	8	•	S	•	•	•	Number of Database REPL calls issued
RESPONSE	CICSPA	D	901	8	•	S	•	•	•	Transaction response time
RLSCPU	DFHFILE	S	175	8	•	S	•	•	•	RLS File Request CPU (SRB) time
RLSWAIT	DFHFILE	S	174	8	•	S	•	•	•	RLS File I/O wait time
RLUNAME	DFHTERM	C	198	8	•	S	S	•	S	VTAM LUALIAS Logical Unit name
RMICPSM	DFHRMI	S	007	8	•	S	•	•	•	RMI elapsed time for CICSPlex SM requests
RMIDB2	DFHRMI	S	003	8	•	S	•	•	•	RMI elapsed time for DB2 requests
RMIDBCTL	DFHRMI	S	004	8	•	S	•	•	•	RMI elapsed time for DBCTL requests
RMIEXDLI	DFHRMI	S	005	8	•	S	•	•	•	RMI elapsed time for EXEC DLI requests
RMIMQM	DFHRMI	S	006	8	•	S	•	•	•	RMI elapsed time for WebSphere MQ requests
RMIOTHER	DFHRMI	S	002	8	•	S	•	•	•	RMI other elapsed time
RMIOTIME	CICSPA	D	911	8	•	S	•	•	•	Resource Manager Interface (RMI) other time
RMISUSP	DFHTASK	S	171	8	•	S	•	•	•	Resource Manager Interface (RMI) suspend time
RMITCPIP	DFHRMI	S	008	8	•	S	•	•	•	RMI elapsed time for TCP/IP socket requests
RMITIME	DFHTASK	S	170	8	•	S	•	•	•	Resource Manager Interface (RMI) elapsed time
RMITOTAL	DFHRMI	S	001	8	•	S	•	•	•	RMI total elapsed time
ROCPU	DFHTASK	S	270	8	•	S	•	•	•	CICS RO TCB CPU time
RODISPT	DFHTASK	S	269	8	•	S	•	•	•	CICS RO TCB dispatch time
RPTCLASS	DFHCICS	C	168	8	•	S	S	•	S	WLM Report Class
RQPWAIT	DFHTASK	S	193	8	•	S	•	•	•	Request Processor Wait Time
RQRWAIT	DFHTASK	S	192	8	•	S	•	•	•	Request Receiver Wait Time
RRMSWAIT	DFHTASK	S	191	8	•	S	•	•	•	Resource Recovery Services indoubt wait time
RSYSID	DFHCICS	C	130	4	•	S	S	•	S	Remote System ID
RTYPE	DFHCICS	C	112	4	•	•	–	•	–	Performance record type
RUNTRWTT	DFHTASK	S	195	8	•	S	•	•	•	BTS run Process/Activity wait time

Table 33. Cross-reference: fields × forms, HDB templates (continued)

CICS PA field name	CMF field: Group	CMF field: Type	CMF field: ID	Length	Report form: LIST	Report form: LISTX	Report form: SUMMARY	HDB template: LIST	HDB template: SUMMARY	Description
S8CPU	DFHTASK	S	261	8	•	S	•	•	•	CICS S8 TCB CPU time
SC24CGET	DFHSTOR	A	117	4	•	S	•	•	•	CDSA GETMAINs below 16MB
SC24CHWM	DFHSTOR	A	116	4	•	S	•	•	•	CDSA HWM below 16MB
SC24COCC	DFHSTOR	A	118	8	•	S	•	•	•	CDSA Storage Occupancy below 16MB
SC24FSHR	DFHSTOR	A	146	4	•	S	•	•	•	CDSA/SDSA storage FREEMAINed below 16MB
SC24GSHR	DFHSTOR	A	145	4	•	S	•	•	•	CDSA/SDSA storage GETMAINed below 16MB
SC24SGET	DFHSTOR	A	144	4	•	S	•	•	•	CDSA/SDSA GETMAINs below 16MB
SC24UGET	DFHSTOR	A	054	4	•	S	•	•	•	UDSA GETMAINs below 16MB
SC24UHWM	DFHSTOR	A	033	4	•	S	•	•	•	UDSA HWM below 16MB
SC24UOCC	DFHSTOR	A	095	8	•	S	•	•	•	UDSA Storage Occupancy below 16MB
SC31CGET	DFHSTOR	A	120	4	•	S	•	•	•	ECDSA GETMAINs above 16MB
SC31CHWM	DFHSTOR	A	119	4	•	S	•	•	•	ECDSA HWM above 16MB
SC31COCC	DFHSTOR	A	121	8	•	S	•	•	•	ECDSA Storage Occupancy above 16MB
SC31FSHR	DFHSTOR	A	149	4	•	S	•	•	•	ECDSA/ESDSA storage FREEMAINed above 16MB
SC31GSHR	DFHSTOR	A	148	4	•	S	•	•	•	ECDSA/ESDSA storage GETMAINed above 16MB
SC31SGET	DFHSTOR	A	147	4	•	S	•	•	•	ECDSA/ESDSA GETMAINs above 16MB
SC31UGET	DFHSTOR	A	105	4	•	S	•	•	•	EUDSA GETMAINs above 16MB
SC31UHWM	DFHSTOR	A	106	4	•	S	•	•	•	EUDSA HWM above 16MB
SC31UOCC	DFHSTOR	A	107	8	•	S	•	•	•	EUDSA Storage Occupancy above 16MB
SCHEDEND	DBCTL	T	034	8	•	–	–	•	–	IMS Schedule end time
SCHEDSTA	DBCTL	T	033	8	•	–	–	•	–	IMS Schedule start time
SCHTELAP	DBCTL	S	004	8	•	S	•	•	•	Elapsed time for Schedule Process
SESSTYPE	DFHTERM	A	165	4	•	•	–	•	–	Terminal session type
SOBYDECT	DFHSOCK	A	243	4	•	S	•	•	•	Secure Socket bytes decrypted count
SOBYENCT	DFHSOCK	A	242	4	•	S	•	•	•	Secure Socket bytes encrypted count
SOCHRIN	DFHSOCK	A	295	8	•	S	•	•	•	Outbound Sockets characters received count
SOCHRIN1	DFHSOCK	A	302	8	•	S	•	•	•	Inbound Sockets characters received count
SOCHROU1	DFHSOCK	A	304	8	•	S	•	•	•	Inbound Sockets characters sent count
SOCHROUT	DFHSOCK	A	297	8	•	S	•	•	•	Outbound Sockets characters sent count
SOCNPSCT	DFHSOCK	A	290	8	•	S	•	•	•	Create Non-Persistent Outbound Socket reqs
SOCPSCT	DFHSOCK	A	291	8	•	S	•	•	•	Create Persistent Outbound Socket requests
SOEXTRCT	DFHSOCK	A	289	8	•	S	•	•	•	EXTRACT TCP/IP and CERTIFICATE requests
SOMSGIN1	DFHSOCK	A	301	8	•	S	•	•	•	Inbound Sockets RECEIVE requests
SOMSGOU1	DFHSOCK	A	303	8	•	S	•	•	•	Inbound Sockets SEND requests
SONPSHWM	DFHSOCK	A	292	8	•	S	•	•	•	Non-Persistent Outbound Socket HWM
SOPSHWM	DFHSOCK	A	293	8	•	S	•	•	•	Persistent Outbound Socket HWM
SORCV	DFHSOCK	A	294	8	•	S	•	•	•	Outbound Sockets RECEIVE requests
SOSEND	DFHSOCK	A	296	8	•	S	•	•	•	Outbound Sockets SEND requests
SOTOTAL	DFHSOCK	A	298	8	•	S	•	•	•	Socket Total requests
SOWAIT	DFHSOCK	S	241	8	•	S	•	•	•	Inbound Socket I/O wait time
SRVCLASS	DFHCICS	C	167	8	•	S	S	•	S	WLM Service Class
START	DFHCICS	T	005	8	•	S	S	S	S	Task start time
STOP	DFHCICS	T	006	8	•	S	S	S	S	Task stop time
STYPE	DFHTASK	C	004	2	•	S	–	•	–	Transaction start type
SUPRREQ	OMCICS	S	018	8	•	S	•	•	•	OMEGAMON monitored Supra requests
SUPRWARN	OMCICS	C	007	4	•	S	S	•	S	OMEGAMON Supra Limit Warning
SUSPEND	DFHTASK	S	014	8	•	S	•	•	•	Suspend time
SYNCDLY	DFHSYNC	S	196	8	•	S	•	•	•	SYNCPOINT parent request wait time
SYNCPT	DFHSYNC	A	060	4	•	S	•	•	•	SYNCPOINT requests
SYNCTIME	DFHSYNC	S	173	8	•	S	•	•	•	SYNCPOINT processing time
SZALLCTO	DFHFEPI	A	157	4	•	S	•	•	•	Allocate conversation time-out count
SZALLOC	DFHFEPI	A	150	4	•	S	•	•	•	Conversations allocated count

Table 33. Cross-reference: fields × forms, HDB templates (continued)

CMF field					Report form			HDB template		
CICS PA field name	Group	Type	ID	Length	LIST	LISTX	SUMMARY	LIST	SUMMARY	Description
SZCHRIN	DFHFEPI	A	155	4	•	S	•	•	•	FEPI characters received count
SZCHROUT	DFHFEPI	A	154	4	•	S	•	•	•	FEPI characters sent count
SZRCV	DFHFEPI	A	151	4	•	S	•	•	•	FEPI RECEIVE requests
SZRCVTO	DFHFEPI	A	158	4	•	S	•	•	•	Receive Data time-out count
SZSEND	DFHFEPI	A	152	4	•	S	•	•	•	FEPI SEND requests
SZSTART	DFHFEPI	A	153	4	•	S	•	•	•	FEPI START requests
SZTOTAL	DFHFEPI	A	159	4	•	S	•	•	•	FEPI API and SPI requests
SZWAIT	DFHFEPI	S	156	8	•	S	•	•	•	FEPI services wait time
T8CPU	DFHTASK	S	400	8	•	S	•	•	•	CICS T8 TCB CPU time
TASKCNT	CICSPA	X	902	4	–	–	•	–	•	Total Task count
TASKNO	DFHTASK	P	031	4	•	S	–	•	–	Transaction identification number
TASKTCNT	CICSPA	X	914	4	–	–	•	–	•	Total Task Termination count
TCALLOC	DFHTERM	A	069	4	•	S	•	•	•	TCTTE ALLOCATE requests
TCBATTCT	DFHTASK	A	251	8	•	S	•	•	•	TCBs attached count
TCC62IN2	DFHTERM	A	137	4	•	S	•	•	•	LU6.2 characters received count
TCC62OU2	DFHTERM	A	138	4	•	S	•	•	•	LU6.2 characters sent count
TCLASSNM	DFHTASK	C	166	8	•	S	S	•	S	Transaction Class name
TCLDELAY	DFHTASK	S	126	8	•	S	•	•	•	First dispatch TCLSNAME wait time
TCM62IN2	DFHTERM	A	135	4	•	S	•	•	•	LU6.2 messages received count
TCM62OU2	DFHTERM	A	136	4	•	S	•	•	•	LU6.2 messages sent count
TCPSRVCE	DFHSOCK	C	245	8	•	S	S	•	S	TCP/IP Service Name
TCWAIT	DFHTERM	S	009	8	•	S	•	•	•	Terminal wait for input time
TDGET	DFHDEST	A	041	4	•	S	•	•	•	Transient data GET requests
TDPURGE	DFHDEST	A	043	4	•	S	•	•	•	Transient data PURGE requests
TDPUT	DFHDEST	A	042	4	•	S	•	•	•	Transient data PUT requests
TDTOTAL	DFHDEST	A	091	4	•	S	•	•	•	Transient data Total requests
TDWAIT	DFHDEST	S	101	8	•	S	•	•	•	VSAM transient data I/O wait time
TERM	DFHTERM	C	002	4	•	S	S	•	S	Terminal ID
TERMCNNM	DFHTERM	C	169	4	•	S	S	•	S	Terminal session Connection name
TERMCODE	DFHTERM	A	165	4	•	•	–	•	–	Terminal Device Type
TERMINFO	DFHTERM	A	165	4	•	•	–	•	–	Terminal information
TESTDEQS	DBCTL	A	020	8	•	S	•	•	•	Number of Test Dequeues
TESTENQS	DBCTL	A	018	8	•	S	•	•	•	Number of Test Enqueues
TESTENQW	DBCTL	A	019	8	•	S	•	•	•	Number of waits on Test Enqueues
THREDCPU	DBCTL	S	032	8	•	S	•	•	•	Thread TCB CPU time
TIASKTCT	DFHCICS	A	405	4	•	S	•	•	•	ASKTIME requests
TITOTCT	DFHCICS	A	406	4	•	S	•	•	•	ASKTIME
TOTCPU	CICSPA	D	918	8	•	S	•	•	•	Total Task CPU Time
TOTRECS	CICSPA	A	001	8	•	•	•	•	•	Cross-System Total record count
TRAN	DFHTASK	C	001	4	•	S	S	S	S	Transaction identifier
TRANFLAG	DFHTASK	A	164	16	•	•	–	•	–	Transaction flags
TRANPRTY	DFHTASK	A	109	4	•	S	–	•	–	Transaction priority
TRANROUT	CICSPA	A	003	8	•	•	•	•	•	Cross-System Transaction Routing records
TRANTYPE	DFHTASK	C	164	8	•	•	–	•	–	Transaction type
TRNGRPID	DFHTASK	C	082	28	–	–	–	–	–	Transaction Group ID
TSGET	DFHTEMP	A	044	4	•	S	•	•	•	Temporary Storage GET requests
TSPUTAUX	DFHTEMP	A	046	4	•	S	•	•	•	Auxiliary TS PUT requests
TSPUTMCT	DFHTEMP	A	047	4	•	S	•	•	•	Main TS PUT requests
TSQNAME	CICSPA	C	917	8	–	–	–	–	–	Temporary Storage Queue Name
TSSHWAIT	DFHTEMP	S	178	8	•	S	•	•	•	Asynchronous Shared TS wait time
TSTOTAL	DFHTEMP	A	092	4	•	S	•	•	•	TS Total requests
TSWAIT	DFHTEMP	S	011	8	•	S	•	•	•	VSAM TS I/O wait time

Table 33. Cross-reference: fields × forms, HDB templates (continued)

CICS PA field name	CMF field Group	Type	ID	Length	Report form LIST	LISTX	SUMMARY	HDB template LIST	SUMMARY	Description
UE1WARN	OMCICS	C	014	4	•	S	S	•	S	OMEGAMON User Event Limit Warning
UOWCONTS	DBCTL	A	030	8	•	S	•	•	•	Number of UOW Contentions
UOWID	CICSPA	C	912	12	•	•	S	•	–	Network UOW ID
UOWSEQ	CICSPA	C	913	5	•	•	–	•	–	Network UOW Sequence Number
UPDTDEQS	DBCTL	A	023	8	•	S	•	•	•	Number of Update Dequeues
UPDTENQS	DBCTL	A	021	8	•	S	•	•	•	Number of Update Enqueues
UPDTENQW	DBCTL	A	022	8	•	S	•	•	•	Number of waits on Update Enqueues
USERID	DFHCICS	C	089	8	•	S	S	S	S	User ID
USREVNT	OMCICS	S	020	8	•	S	•	•	•	OMEGAMON User defined events
VSAMWARN	OMCICS	C	003	4	•	S	S	•	S	OMEGAMON VSAM Limit warning
WAITCICS	DFHTASK	S	182	8	•	S	•	•	•	CICS ECB wait time
WAITEXT	DFHTASK	S	181	8	•	S	•	•	•	External ECB wait time
WBATMSNM	DFHWEBB	C	382	8	•	S	S	•	S	ATOMSERVICE resource definition name
WBBROWSE	DFHWEBB	A	239	8	•	S	•	•	•	Web Browse requests
WBBRWOCT	DFHWEBB	A	338	8	•	S	•	•	•	CICS Web Support BROWSE HTTPHEADER requests
WBCHRIN	DFHWEBB	A	232	4	•	S	•	•	•	Web characters received count
WBCHRIN1	DFHWEBB	A	334	8	•	S	•	•	•	CICS Web Support RECEIVE and CONVERSE chars
WBCHROU1	DFHWEBB	A	336	8	•	S	•	•	•	CICS Web Support SEND and CONVERSE chars
WBCHROUT	DFHWEBB	A	234	4	•	S	•	•	•	Web characters sent count
WBEXTRCT	DFHWEBB	A	238	8	•	S	•	•	•	Web EXTRACT requests
WBISSFCT	DFHWEBB	A	388	4	•	S	•	•	•	INVOKE SERVICE request SOAP faults received
WBIWBSCT	DFHWEBB	A	340	8	•	S	•	•	•	INVOKE SERVICE and INVOKE WEBSERVICE requests
WBPARSCT	DFHWEBB	A	337	8	•	S	•	•	•	CICS Web Support PARSE URL requests
WBPIPLNM	DFHWEBB	C	381	8	•	S	S	•	S	PIPELINE resource definition name
WBPROGNM	DFHWEBB	C	385	8	•	S	S	•	S	Program name in URIMAP resource definition
WBRCV	DFHWEBB	A	231	4	•	S	•	•	•	Web RECEIVE requests
WBRCVIN1	DFHWEBB	A	333	8	•	S	•	•	•	CICS Web Support RECEIVE and CONVERSE requests
WBREAD	DFHWEBB	A	224	8	•	S	•	•	•	Web READ requests
WBREDOCT	DFHWEBB	A	331	8	•	S	•	•	•	CICS Web Support READ HTTPHEADER requests
WBREPRCT	DFHWEBB	A	236	4	•	S	•	•	•	Web Temporary Storage Repository read requests
WBREPRDL	DFHWEBB	A	341	8	•	S	•	•	•	Repository Read data length
WBREPWCT	DFHWEBB	A	237	4	•	S	•	•	•	Web Temporary Storage Repository write requests
WBREPWDL	DFHWEBB	A	342	8	•	S	•	•	•	Repository Write data length
WBSEND	DFHWEBB	A	233	4	•	S	•	•	•	Web SEND requests
WBSFCRCT	DFHWEBB	A	386	4	•	S	•	•	•	SOAPFAULT CREATE requests
WBSFTOCT	DFHWEBB	A	387	4	•	S	•	•	•	SOAPFAULT ADD
WBSNDOU1	DFHWEBB	A	335	8	•	S	•	•	•	CICS Web Support SEND and CONVERSE requests
WBSREQBL	DFHWEBB	A	390	4	•	S	•	•	•	SOAP request SOAP body length
WBSRSPBL	DFHWEBB	A	392	4	•	S	•	•	•	SOAP response SOAP body length
WBSVCENM	DFHWEBB	C	383	32	•	S	S	•	S	WEBSERVICE resource definition name
WBSVOPNM	DFHWEBB	C	384	64	•	S	S	•	S	WEBSERVICE operation name
WBTOTAL	DFHWEBB	A	235	4	•	S	•	•	•	Web Total requests
WBURIMNM	DFHWEBB	C	380	8	•	S	S	•	S	URIMAP resource definition name
WBWRITE	DFHWEBB	A	225	8	•	S	•	•	•	Web WRITE requests
WBWRTOCT	DFHWEBB	A	332	8	•	S	•	•	•	CICS Web Support WRITE HTTPHEADER requests
WMQASRBT	DFHDATA	S	397	8	•	S	•	•	•	WebSphere MQ API SRB CPU time
WMQGETWT	DFHDATA	S	396	8	•	S	•	•	•	WebSphere MQ GETWAIT wait time
WMQREQCT	DFHDATA	A	395	4	•	S	•	•	•	Number of WebSphere MQ requests
WSACBLCT	DFHWEBB	A	420	4	•	S	•	•	•	WSACONTEXT BUILD requests
WSACGTCT	DFHWEBB	A	421	4	•	S	•	•	•	WSACONTEXT GET requests
WSAEPCCT	DFHWEBB	A	422	4	•	S	•	•	•	WSAEPR CREATE requests
WSATOTCT	DFHWEBB	A	423	4	•	S	•	•	•	Total Web Services Addressing requests

Table 33. Cross-reference: fields × forms, HDB templates (continued)

	CMF field				Report form			HDB template		
CICS PA field name	**Group**	**Type**	**ID**	**Length**	**LIST**	**LISTX**	**SUMMARY**	**LIST**	**SUMMARY**	**Description**
X8CPU	DFHTASK	S	271	8	•	S	•	•	•	CICS X8 TCB CPU time
X9CPU	DFHTASK	S	272	8	•	S	•	•	•	User task X9 Mode CPU time

Chapter 18. CICS PA-specific fields

Here is a list of CICS PA-specific fields that you can use in report forms:

ALERT
For Performance Summary alert reporting, the count or percentage total of transactions at the specified alert severity (Critical, Warning, or Info) for the summary key.

APPLID
CICS generic APPLID.

APPLRECS
Number of Application records in this Network Unit-of-Work Extract record. All Cross-System Work Extract records include this field.

COMMWAIT
Total time value of the communications related fields IRWAIT, ISWAIT, SZWAIT, TCWAIT, LU61WAIT, and LU62WAIT.

DPLRECS
Number of Distributed Program Link (DPL) records in this Network Unit-of-Work Extract record. This is a subset of FUNCSHIP, the Function Shipping record count. All Cross-System Work Extract records include this field.

FILENAME
Transaction resource class data only: VSAM file name.

FUNCSHIP
Number of Function Shipping records in this Network Unit-of-Work Extract record. All Cross-System Work Extract records include this field.

IOWAIT
Total time value of the I/O wait time fields FCWAIT, JCWAIT, TDWAIT, TSWAIT.

IRESP CICS internal response time for the transaction. It is calculated by the difference in the Start and Stop times minus the time spent waiting on the terminal (operator think time).

JOBNAME
Jobname of the CICS system.

JVMMTIME
JVM method time, the elapsed time spent in the CICS JVM by the user task, excluding the JVM initialize and reset elapsed times. It is calculated as:

JVM elapsed time (JVMTIME) - JVM init time (JVMITIME) - JVM reset time (JVMRTIME)

MVSID
SMF system ID.

OSLATNCY
Latency since start of originating transaction. It is calculated as the difference between the Start time of the current transaction and the Start time of the originating transaction.

PHLATNCY
Previous hop latency time for the transaction. It is calculated as the difference between the Start time of the current transaction and the Start time of the previous hop transaction.

RELEASE
CICS release. For example, CICS TS V4.1 is 660.

RESPONSE
CICS response time for the transaction. It is calculated as the difference between the Start and Stop times.

RMIOTIME
Elapsed time the task was suspended by the dispatcher while in the Resource Manager Interface (RMI), excluding time waiting for DB2 and IMS. It is calculated as:

RMI suspend time (RMISUSP) - IMS wait time (IMSWAIT) - DB2 readyq wait time (DB2RDYQW) - DB2 connection wait time (DB2CONWT) - DB2 wait time (DB2WAIT)

TASKCNT
For Summary reporting only: the total number of tasks (CMF records).

TASKTCNT
For Summary reporting only: the total number of completed tasks (CMF termination records).

TOTCPU
The total task CPU time. This field is calculated as:

User CPU Time (DFHTASK S008) + RLS File Request CPU Time (DFHFILE S175)

TOTRECS
Total number of records in this Network Unit-of-Work Extract record. All Cross-System Work Extract records include this field. It is calculated as:

APPLRECS + TRANROUT + FUNCSHIP + DPLRECS

TRANROUT
Number of terminal-owning region records in this Network Unit-of-Work Extract record. All Cross-System Work Extract records include this field.

UOWID
Network unit-of-work ID: the first 6 bytes of NETUOWSX DFHTASK C098 that uniquely identifies this unit of work. This ID is assigned at attach time using either a STCK token (when the task is attached to a local terminal), or the network unit of work ID passed as part of an ISC APPC or IRC attach header. The system clock will wrap at intervals of several months.

UOWSEQ
Network unit-of-work ID sequence number: the last 2 bytes of NETUOWSX DFHTASK C098. This field is the period count, typically incremented at each syncpoint.

Part 7. Appendixes

Notices

This information was developed for products and services offered in the U.S.A. IBM may not offer the products, services, or features discussed in this document in other countries. Consult your local IBM representative for information on the products and services currently available in your area. Any reference to an IBM product, program, or service is not intended to state or imply that only that IBM product, program, or service may be used. Any functionally equivalent product, program, or service that does not infringe any IBM intellectual property right may be used instead. However, it is the user's responsibility to evaluate and verify the operation of any non-IBM product, program, or service.

IBM may have patents or pending patent applications covering subject matter described in this document. The furnishing of this document does not give you any license to these patents. You can send license inquiries, in writing, to:

IBM Director of Licensing
IBM Corporation
North Castle Drive
Armonk, NY 10504-1785
U.S.A.

For license inquiries regarding double-byte (DBCS) information, contact the IBM Intellectual Property Department in your country or send inquiries, in writing, to:

IBM World Trade Asia Corporation
Licensing
2-31 Roppongi 3-chome, Minato-ku
Tokyo 106, Japan

The following paragraph does not apply in the United Kingdom or any other country where such provisions are inconsistent with local law:

INTERNATIONAL BUSINESS MACHINES CORPORATION PROVIDES THIS PUBLICATION "AS IS" WITHOUT WARRANTY OF ANY KIND, EITHER EXPRESS OR IMPLIED, INCLUDING, BUT NOT LIMITED TO, THE IMPLIED WARRANTIES OF NON-INFRINGEMENT, MERCHANTABILITY, OR FITNESS FOR A PARTICULAR PURPOSE. Some states do not allow disclaimer of express or implied warranties in certain transactions, therefore this statement may not apply to you.

This publication could include technical inaccuracies or typographical errors. Changes are periodically made to the information herein; these changes will be incorporated in new editions of the publication. IBM may make improvements and/or changes in the product(s) and/or the program(s) described in this publication at any time without notice.

Licensees of this program who want to have information about it for the purpose of enabling: (i) the exchange of information between independently created programs and other programs (including this one) and (ii) the mutual use of the information which has been exchanged, should contact IBM United Kingdom Laboratories, MP151, Hursley Park, Winchester, Hampshire, England, SO21 2JN.

Such information may be available, subject to appropriate terms and conditions, including in some cases, payment of a fee.

The licensed program described in this information and all licensed material available for it are provided by IBM under terms of the IBM Customer Agreement, IBM International Programming License Agreement, or any equivalent agreement between us.

Trademarks

IBM, the IBM logo, and ibm.com® are trademarks or registered trademarks of International Business Machines Corp., registered in many jurisdictions worldwide. Other product and service names might be trademarks of IBM or other companies. A current list of IBM trademarks is available on the Web at Copyright and trademark information at www.ibm.com/legal/copytrade.shtml.

Adobe, the Adobe logo, PostScript, and the PostScript logo are either registered trademarks or trademarks of Adobe Systems Incorporated in the United States, and/or other countries.

Microsoft, is a trademark of Microsoft Corporation in the United States, other countries, or both.

UNIX is a registered trademark of The Open Group in the United States and other countries.

Java and all Java-based trademarks and logos are trademarks or registered trademarks of Oracle and/or its affiliates.

Bibliography

Additional information can be found in the following publications.

CICS Performance Analyzer books

User's Guide, SC34-7153
Report Reference, SC34-7154
Getting Started Guide, SC34-7155
Program Directory, GI13-0562

Books from related libraries

You might find the following publications useful when using CICS Performance Analyzer to analyze and tune the performance of your CICS systems.

CICS Transaction Server for z/OS Version 4

CICS System Definition Guide, SC34-6999
CICS Customization Guide, SC34-7001
CICS Resource Definition Guide, SC34-7000
CICS Operations and Utilities Guide, SC34-7002
CICS Supplied Transactions, SC34-7004
CICS Application Programming Guide, SC34-7022
CICS Application Programming Reference, SC34-7023
CICS System Programming Reference, SC34-7024
CICS Business Transaction Services, SC34-7029
CICS External Interfaces Guide, SC34-7019
CICS Internet Guide, SC34-7021
CICS Performance Guide, SC34-7033
CICS DB2 Guide, SC34-7011

CICS Transaction Server for z/OS Version 3

CICS System Definition Guide, SC34-6813
CICS Customization Guide, SC34-6814
CICS Resource Definition Guide, SC34-6815
CICS Operations and Utilities Guide, SC34-6816
CICS Supplied Transactions, SC34-6817
CICS Application Programming Guide, SC34-6818
CICS Application Programming Reference, SC34-6819
CICS System Programming Reference, SC34-6820
CICS Business Transaction Services, SC34-6824
CICS External Interfaces Guide, SC34-6830
CICS Internet Guide, SC34-6831
CICS Performance Guide, SC34-6833
CICS DB2 Guide, SC34-6837

CICS Transaction Gateway

z/OS Administration, SC34-6961

IMS Performance Analyzer for z/OS

IMS Performance Analyzer User's Guide, SC19-2732
IMS Performance Analyzer Report Reference, SC19-2734

z/OS

z/OS MVS System Management Facilities (SMF), SA22-7630
z/OS DFSORT Application Programming Guide, SC26-7523

RMF

z/OS RMF User's Guide, SC33-7990
z/OS RMF Report Analysis, SC33-7991
z/OS RMF Performance Management Guide, SC33-7992

WebSphere MQ for z/OS

WebSphere MQ for z/OS System Setup Guide, SC34-6052

Tivoli Decision Support for z/OS

Accounting Workstation for z/OS User Guide, SH19-4516
Administration Guide, SH19-6816
CICS Performance Feature Guide and Reference, SH19-6820

DB2

DB2 UDB for z/OS Administration Guide, SC18-7413

DB2 PM

DB2 Performance Monitor for z/OS Report Reference, SC18-7978
DB2 Performance Monitor for z/OS Reporting User's Guide, SC18-7979

Others

Threadsafe Considerations for CICS, SG24-6351
Systems Programmers Guide to: z/OS System Logger, SG24-6898
Performance Considerations and Measurements for CICS and System Logger, REDP-3768

Index

Special characters

A

B

C

D

E

F

G

H

I

J

K

L

M

N

O

P

R

S

T

U

W

Z

Readers' Comments — We'd Like to Hear from You

IBM CICS Performance Analyzer for z/OS
Report Reference
Version 3 Release 2

Publication No. SC34-7154-01

We appreciate your comments about this publication. Please comment on specific errors or omissions, accuracy, organization, subject matter, or completeness of this book. The comments you send should pertain to only the information in this manual or product and the way in which the information is presented.

For technical questions and information about products and prices, please contact your IBM branch office, your IBM business partner, or your authorized remarketer.

When you send comments to IBM, you grant IBM a nonexclusive right to use or distribute your comments in any way it believes appropriate without incurring any obligation to you. IBM or any other organizations will only use the personal information that you supply to contact you about the issues that you state on this form.

Comments:

Thank you for your support.

Submit your comments using one of these channels:
- Send your comments to the address on the reverse side of this form.
- Send a fax to the following number: +44 (0) 1962 816151
- Send your comments via email to: idrcf@uk.ibm.com

If you would like a response from IBM, please fill in the following information:

Name	Address
Company or Organization	
Phone No.	Email address

Readers' Comments — We'd Like to Hear from You
SC34-7154-01

IBM®

Cut or Fold
Along Line

Fold and Tape | **Please do not staple** | Fold and Tape

PLACE
POSTAGE
STAMP
HERE

IBM United Kingdom Limited
User Technologies Department (MP095)
Hursley Park
Winchester
Hampshire
United Kingdom
SO21 2JN

Fold and Tape | **Please do not staple** | Fold and Tape

SC34-7154-01

Cut or Fold
Along Line

SC34-7154-01