IBM RS/6000 SP

Planning Volume 2, Control Workstation and Software Environment

GA22-7281-01

IBM RS/6000 SP

Planning Volume 2, Control Workstation and Software Environment

GA22-7281-01

Note

Before using this information and the product it supports, be sure to read the general information under “Notices” on page vii

Second Edition (October 1997)

This is a major revision of GA22-7281-00.

This edition applies to Version 2 Release 3 of IBM Parallel System Support Programs for AIX (5765-529), which runs on the IBM RS/6000 SP, and to all subsequent releases and modifications until otherwise indicated in new editions. Significant changes or additions to the text and illustrations are indicated by a vertical line (|) to the left of the change.

This edition also contains information about support for the SP Switch Router Adapter that was added as a PTF to PSSP 2.3.

Order publications through your IBM representative or the IBM branch office serving your locality. Publications are not stocked at the address below.

IBM welcomes your comments. A form for readers' comments may be provided at the back of this publication, or you may address your comments to the following address:

International Business Machines Corporation
Department 55JA Mail Station P384
522 South Road
Poughkeepsie, NY 12601-5400
United States of America

FAX (United States and Canada): 1+914+432-9405
FAX (Other Countries):

Your international Access Code +1+914+432+9405

IBMLink (United States customers only): KGNVMC(MHVRCFS)
IBM Mail Exchange: USIB6TC9 at IBMMAIL
Internet e-mail: mhvrcfs@vnet.ibm.com
World Wide Web: http://www.rs6000.ibm.com

If you would like a reply, be sure to include your name, address, telephone number, or FAX number.

Make sure to include the following in your comment or note:

- Title and order number of this book
- Page number or topic related to your comment

When you send information to IBM, you grant IBM a nonexclusive right to use or distribute the information in any way it believes appropriate without incurring any obligation to you.

Copyright International Buisiness Machines Corporation 1997. All rights reserved. Note to U.S. Government Users — Documentation related to restricted rights — Use, duplication or disclosure is subject to restrictions set forth in GSA ADP Schedule Contract with IBM Corp.

© **Copyright International Business Machines Corporation 1997. All rights reserved.**
Note to U.S. Government Users — Documentation related to restricted rights — Use, duplication or disclosure is subject to restrictions set forth in GSA ADP Schedule Contract with IBM Corp.

Contents

Notices . . . vii
Trademarks . . . vii
Publicly Available Software . . . viii

About This Book . . . ix
Who Should Use This Book . . . ix
How This Book is Organized . . . ix
Typographic Conventions . . . x
Accessing Online Information . . . x
Obtaining Documentation . . . xi
Related Publications . . . xi
RS/6000 SP Publications . . . xi
Parallel System Support Programs for AIX Publications . . . xi
IBM Virtual Shared Disk and IBM Recoverable Virtual Shared Disk Publication xi
Performance Monitor Publication . . . xii
General Parallel File System for AIX Publication . . . xii
LoadLeveler Publications . . . xii
Parallel Environment for AIX Publications . . . xii
PVMe for AIX Publications . . . xii
Client Input Output/Sockets (CLIO/S) Publications . . . xii
Parallel I/O File System Publications . . . xii
Network Tape Access and Control System for AIX (NetTAPE) Publications xiii
Other IBM Publications . . . xiii
International Technical Support Organization Publications (Red Books) . . . xiii
AIX and RISC System/6000 Publications . . . xiii
Service . . . xiv
Network Queueing System/MVS (NQS/MVS) . . . xiv
Network Connectivity . . . xv
Adapters . . . xv
Non-IBM Publications . . . xvi
Parallel Computing . . . xvi
Tcl . . . xvi
Ascend GRF . . . xvi
Manual Pages for Public Code . . . xvi

Introduction to System Planning . . . 1

Chapter 1. Introduction to System Planning . . . 3
Planning Services . . . 3
Hardware Overview . . . 4
Software Overview . . . 8
SP Planning Issues . . . 9
Using SP Books for Planning . . . 9

Chapter 2. Defining the System that Fits Your Needs . . . 11
Question 1: Do You Want a Preloaded SP or the Default Version? . . . 11
Question 2: Why Do You Need an SP? . . . 15
Question 3: What Related IBM Program Products Do You Need? . . . 17
Question 4: What Levels of AIX Do You Need? . . . 21

© Copyright IBM Corp. 1997

Question 5: What Type of Network Connectivity Do You Need? 26
Question 6: What are Your Disk Storage Requirements? 28
Question 7: What are Your Reliability and Availability Requirements? 31
Question 8: How Many Nodes Do You Need? 32
System-Wide Worksheets 35
Completing the SP Node Layout Worksheets 36
Networking Information 39
Question 9: Defining Your System Images 45
Question 10: What Do You Need for Your Control Workstation? 49

Chapter 3. Defining the Configuration that Fits Your Needs 57
The Impact of Software Planning on Site and Hardware Planning 57
Planning Your Site Environment 57
Planning Your System Network 65
Determining Space Requirements 72
Planning Your Network Configuration 75
Understanding Node Numbering and Switch Node Numbering 80

Chapter 4. Planning for a High Availability Control Workstation 89
Overall System View of a High Availability Control Workstation 89
Benefits of a High Availability Control Workstation 90
Difference Between Fault Tolerance and High Availability 91
IBM's Approach to High Availability for Control Workstations 91
Related Reliability Options for Control Workstations 94
Software Requirements for HACWS Control Workstation Configurations 95
Planning Your High Availability Control Workstation Network Configuration . . 96

Chapter 5. Planning SP System Partitions 101
What is System Partitioning 101
How Do You Partition the System? 101
Example 1 -The basic 16-node system 103
Using a Switch in a Partition 104
Example 2 - A Switchless System 107
The System Partitioning Aid 107
Accessing Data Across System Partitions 108
The Relationship of SP Resources to System Partitions 108
Example 3 - An SP with 3 frames, 2 switches, and various node sizes 114
System Partitioning Configuration Directory Structure 116

Chapter 6. Planning for Security 119
Authentication in the SP System 119
Authentication Worksheets 129

Chapter 7. Planning to Record and Diagnose System Problems 131
Configuring the AIX Error Log 131
Configuring the BSD Syslog 131
System Error Logs 132
Finding and Using Error Messages 133
Getting Help from IBM 133
IBM Tools for Problem Resolution 134

Chapter 8. Planning for PSSP-Related LPPs 137
Planning for IBM Virtual Shared Disk and IBM Recoverable Virtual Shared Disk 137

Planning for IBM Virtual Shared Disk Communications 137
Planning for Parallel ESSL 139
Planning for Parallel Environment 140
Planning for Performance Monitor (PTPE) 141
Planning for LoadLeveler 142
Planning for PVMe 144
Planning for Parallel I/O File System 144
Planning for NetTape 144
Planning for IBM Client Input Output/Sockets (CLIO/S) 145
Planning for General Parallel File System (GPFS) 145

Customizing Your System 147

Chapter 9. Planning for Expanding or Modifying Your System 149
Questions to Answer Before Expanding/Modifying/Ordering Your System . . 149
Scenario 1: Expanding the Sample System by Adding a Node 153
Scenario 2: Expanding the Sample System by Adding a Frame 153
Scenario 3: Expanding the Sample System by Adding a Switch 157

Chapter 10. Planning for Migration 159
Developing Your Migration Goals 160
Developing Your Migration Strategy 164
Reviewing Your Migration Steps 172

Appendixes 173

Appendix A. The System Partitioning Aid - A Brief Tutorial 175
The GUI - "spsyspar" 175
The CLI - "sysparaid" 184
Example 3 of Chapter 5 187

Appendix B. System Partitioning 199
8 Switch Port System 199
16 Switch Port System 199
32 Switch Port System 202
48 Switch Port System 206
64 Switch Port System 207
80 Switch Port System With 0 Intermediate Switch Boards 208
80 Switch Port System With Intermediate Switch Boards 211
96 Switch Port System 213
112 Switch Port System 215
128 Switch Port System 218

Appendix C. SP System Planning Worksheets 223

Glossary 247
Terms and Abbreviations 247

Index 255

Notices

References in this publication to IBM products, programs, or services do not imply that IBM intends to make these available in all countries in which IBM operates. Any reference to an IBM product, program, or service is not intended to state or imply that only IBM's product, program, or service may be used. Any functionally equivalent product, program, or service that does not infringe any of IBM's intellectual property rights may be used instead of the IBM product, program, or service. Evaluation and verification of operation in conjunction with other products, except those expressly designated by IBM, are the user's responsibility.

IBM may have patents or pending patent applications covering subject matter in this document. The furnishing of this document does not give you any license to these patents. You can send license inquiries, in writing, to:

IBM Director of Licensing
IBM Corporation
500 Columbus Avenue
Thornwood, NY 10594
USA

Licensees of this program who wish to have information about it for the purpose of enabling: (i) the exchange of information between independent created programs and other programs (including this one) and (ii) the mutual use of the information which has been exchanged, should contact:

IBM Corporation
Mail Station P300
522 South Road
Poughkeepsie, NY 12601-5400
USA
Attention: Information Request

Such information may be available, subject to appropriate terms and conditions, including in some cases, payment of a fee.

Trademarks

The following terms are trademarks of the IBM Corporation in the United States or other countries or both:

AIX
ESCON
IBM
LoadLeveler
Micro Channel
RS/6000
RS/6000 Scalable POWERparallel Systems

Microsoft, Windows, and the Windows 95 logo are trademarks or registered trademarks of Microsoft Corporation.

© Copyright IBM Corp. 1997

PC Direct is a trademark of Ziff Communications Company and is used by IBM Corporation under license.

UNIX is a registered trademark in the United States and other countries licensed exclusively through X/Open Company Limited.

C-bus is a trademark of Corollary, Inc.

Java and HotJava are trademarks of Sun Microsystems, Inc.

Pentium, MMX, ProShare, LANDesk and ActionMedia are trademarks or registered trademarks of Intel Corporation in the United States and other countries.

Other company, product, and service names, which may be denoted by a double asterisk (**), may be trademarks or service marks of others.

Publicly Available Software

This product includes software that is publicly available:

expect Programmed dialogue with interactive programs

Kerberos Provides authentication of the execution of remote commands

NTP Network Time Protocol

Perl Practical Extraction and Report Language

SUP Software Update Protocol

Tcl Tool Command Language

TclX Tool Command Language Extended

Tk Tcl-based Tool Kit for X-windows

This book discusses the use of these products only as they apply specifically to the SP system. The distribution for these products includes the source code and associated documentation. (Kerberos does not ship source code.) **/usr/lpp/ssp/public** contains the compressed **tar** files of the publicly available software. (IBM has made minor modifications to the versions of Tcl and Tk used in the SP system to improve their security characteristics. Therefore, the IBM-supplied versions do not match exactly the versions you may build from the compressed **tar** files.) All copyright notices in the documentation must be respected. You can find version and distribution information for each of these products that are part of your selected install options in the **/usr/lpp/ssp/README/ssp.public.README** file.

About This Book

This book helps you plan an IBM RS/6000 SP Systems installation that meets your programming requirements. Read this book and fill in the worksheets in Appendix C, "SP System Planning Worksheets" on page 223 as you plan your software.

This book applies to PSSP Version 2 Release 3. To find out what version of PSSP is running on your system, enter the following:

```
SDRGetObjects SP code_version
```

In response, the system displays something similar to:

```
code_version
PSSP-2.3
```

If the response indicates **PSSP-2.3**, this book applies to the version of PSSP that is running on your system.

To find out what version of PSSP is running on the nodes on your system, enter the following:

```
splst_versions -G -t
```

In response, the system displays something similar to:

```
1 PSSP-2.3
2 PSSP-2.3
7 PSSP-2.3
8 PSSP-2.3
```

If you are running mixed levels of PSSP in a system partition, be sure to maintain and refer to the appropriate documentation for whatever versions of PSSP you are running.

Who Should Use This Book

This book is intended for those responsible for planning the network and system installation of an IBM RS/6000 SP Systems machine.

This book assumes that you have a working knowledge of AIX* or Unix* and experience with network systems. In addition, you should already know what the basic SP and AIX features are, and have a basic understanding of computer systems, networks, and applications.

How This Book is Organized

This book is organized into several sections:

Planning Your System

This section discusses a variety of topics including defining your system and configuration, planning for control workstations and system partitions, as well as security and problem diagnosis.

© Copyright IBM Corp. 1997

Customizing Your System

This section discusses the planning considerations necessary when modifying your system by expanding it or migrating it to a different level of AIX and PSSP.

Appendixes

This section contains appendixes. The first appendix contains a tutorial for using the System Partitioning Aid. The second appendix is a description of the system partitioning layouts and the third appendix contains system planning worksheets that you should copy, and complete according to directions throughout the book, and save for reference.

Typographic Conventions

This book uses the following typographic conventions:

Typographic	Usage
Bold	• **Bold** words or characters represent system elements that you must use literally, such as commands, flags, and path names. • **Bold** words also indicate the first use of a term included in the glossary.
Italic	• *Italic* words or characters represent variable values that you must supply. • *Italics* are also used for book titles and for general emphasis in text.
`Constant width`	Examples and information that the system displays appear in `constant width` typeface. All references to the hypothetical customer, `Corporation ABC`, and any choices made by `Corporation ABC` are in this font.
[ ]	Brackets enclose optional items in format and syntax descriptions.
{ }	Braces enclose a list from which you must choose an item in format and syntax descriptions.
|	A vertical bar separates items in a list of choices. (In other words, it means “or.”)
< >	Angle brackets (less-than and greater-than) enclose the name of a key on the keyboard. For example, <**Enter**> refers to the key on your terminal or workstation that is labeled with the word Enter.
...	An ellipsis indicates that you can repeat the preceding item one or more times.
<**Ctrl-***x*>	The notation <**Ctrl-***x*> indicates a control character sequence. For example, <**Ctrl-c**> means that you hold down the control key while pressing <**c**>.

Accessing Online Information

In order to use the PSSP man pages or access the PSSP online (HTML) publications, the ssp.docs file set must first be installed. To view the PSSP online publications, you also need the following:

- Access to a common HTML document browser (such as Netscape, WebExplorer, or Mosaic).
- The location of the HTML index file provided with the ssp.docs file set. Contact your system administrator or installer for this location.

Obtaining Documentation

You can view this book or download a PostScript version of it from the IBM RS/6000 web site at **http://www.rs6000.ibm.com**. At the time this manual was published, the full path was **http://www.rs6000.ibm.com/resource/aix_resource/sp_books**. However, the structure of the RS/6000 web site can change over time.

Related Publications

RS/6000 SP Publications

- *IBM RS/6000 SP:Planning Volume 1, Hardware and Physical Environment*, GA22–7280–00
- *IBM RS/6000 SP: Maintenance Information, Volume 1, Installation and CE Operations*, GC23-3903
- *IBM RS/6000 SP: Maintenance Information, Volume 2, Maintenance Analysis Procedures and Parts Catalog*, GC23-3904

Parallel System Support Programs for AIX Publications

- *IBM Parallel System Support Programs for AIX: Administration Guide*, GC23-3897
- *IBM Parallel System Support Programs for AIX: Installation and Migration Guide*, GC23-3898
- *IBM Parallel System Support Programs for AIX: Diagnosis and Messages Guide*, GC23-3899
- *IBM Parallel System Support Programs for AIX: Command and Technical Reference*, GC23-3900
- *IBM Parallel System Support Programs for AIX: Event Management Programming Guide and Reference*, SC23-3996
- *IBM Parallel System Support Programs for AIX: Group Services Programming Guide and Reference*, SC28-1675
- *IBM Parallel System Support Programs for AIX: Licensed Program Specification*, GC23-3901

As an alternative to ordering the individual books, you can use SBOF-8587 to order the entire SP software library.

IBM Virtual Shared Disk and IBM Recoverable Virtual Shared Disk Publication

- *IBM Parallel System Support Programs for AIX: Managing Shared Disks*, SC22–7279

Performance Monitor Publication

- *IBM Performance Toolbox Parallel Extensions for AIX: Guide and Reference*, SC23-3997

General Parallel File System for AIX Publication

- *IBM General Parallel File System for AIX: Installation and Administration Guide*, SA22–7278

LoadLeveler Publications

- *Using and Administering LoadLeveler*, SC23-3989
- *IBM LoadLeveler: Licensed Program Specification*, GH23-0040

Parallel Environment for AIX Publications

- *IBM Parallel Environment for AIX: Hitchhiker's Guide*, GC23-3895
- *IBM Parallel Environment for AIX: Operation and Use, Volume 1*, SC28-1979
- *IBM Parallel Environment for AIX: Operation and Use, Volume 2*, SC28-1980
- *IBM Parallel Environment for AIX: Installation Guide* GC28-1981
- *IBM Parallel Environment for AIX: Messages* GC28-1982
- *IBM Parallel Environment for AIX: MPL Programming and Subroutine Reference*, GC23-3893
- *IBM Parallel Environment for AIX: MPI Programming and Subroutine Reference*, GC23-3894
- *IBM Parallel Environment for AIX: Licensed Program Specification*, GC23-3896

As an alternative to ordering the individual books, you can use SBOF-8588 to order the entire Parallel Environment for AIX library.

PVMe for AIX Publications

- *IBM PVMe for AIX: Fact Sheet*, GC23-3907
- *IBM PVMe for AIX: User's Guide and Reference* GC23-3884
- *IBM PVMe for AIX: Licensed Program Specification* GC23-3885

Client Input Output/Sockets (CLIO/S) Publications

- *IBM CLIO/S General Information*, GC23-3879
- *IBM CLIO/S Licensed Program Specification*, GC23-3789
- *IBM CLIO/S User's Guide and Reference* GC28-1676

Parallel I/O File System Publications

- *IBM AIX Parallel I/O File System: Fact Sheet* G325-0649
- *IBM AIX Parallel I/O File System: Installation, Administration, and Use*, SH34-6065
- *IBM AIX Parallel I/O File System: Licensed Program Specification*, GH34-6066

Network Tape Access and Control System for AIX (NetTAPE) Publications

- *IBM NetTAPE General Information* GC23-3990
- *IBM NetTAPE User's Guide and Reference* available from your IBM representative

---

Other IBM Publications

International Technical Support Organization Publications (Red Books)

- *IBM International Technical Support Centers Implementing High Availability on RS/6000 SP*, SG24-4742
- *IBM International Technical Support Centers RS/6000 SP High Availability Infrastructure*, SG24-4838
- *IBM International Technical Support Centers RS/6000 SP PSSP 2.2 Technical Presentation*, SG24-4868
- *IBM International Technical Support Centers RS/6000 SP PSSP 2.3 Technical Presentation*, SG24-2080

AIX and RISC System/6000 Publications

- *IBM AIX Version 4 Getting Started*, SC23-2527
- *IBM AIX General Concepts and Procedures for RS/6000* GC23-2202
- *IBM AIX Version 4 Files Reference*, SC23-2512
- *IBM AIX Version 4 System Management Guide: Communications and Networks*, SC23-2526
- *IBM AIX Version 4.1 Installation Guide* SC23-2550
- *IBM AIX Version 4.2 Installation Guide* SC23-1924
- *IBM AIX Version 4 Commands Reference*, SBOF-1851 (all volumes)
- *IBM AIX Versions 3.2 and 4 Performance Tuning Guide* SC23-2365
- *IBM AIX Version 4 Messages Guide and Reference* SC23-2641
- *IBM AIX Version 4.1 Network Installation Management Guide and Reference*, SC23-2627
- *IBM AIX Version 4.2 Network Installation Management Guide and Reference*, SC23-1926
- *IBM AIX Version 4 System Management Guide: Operating System and Devices*, SC23-2525
- *IBM AIX Version 4 General Programming Concepts: Writing and Debugging Programs*, SC23-2533
- *IBM AIX Version 4 Communications Programming Concepts* SC23-2610
- *Diskless Workstation Management Guide*, SC23-2433
- *C++ for AIX/6000: Language Reference*, SC09-1606
- *C++ for AIX/6000: Standard Class Library Reference*, SC09-1604

- *C++ for AIX/6000: User's Guide*, SC09-1605
- *IBM Performance Toolbox 1.2 and 2 for AIX: Guide and Reference*, SC23-2625
- *IBM AIX Version 3.2 Problem Solving Guide and Reference* SC23-2204
- *IBM AIX Version 4 Problem Solving Guide and Reference* SC23-2606
- *Information Manual for Diagnostics Micro Channel Bus* SA23–2765
- *7012 300 Series Operator Guide,* SA23-2623
- *7012 300 Series Installation and Service Guide,* SA23-2624
- *7013 500 Series Operator Guide,* SA38-0530
- *7013 500 Series Installation and Service Guide,* SA38-0531
- *Electrical Safety for IBM Customer Engineers,* S229-8124
- *Service Information Binder,*SX33-6060
- *7015 Model R30 CPU Enclosure Operator Guide,* SA23-2742
- *7015 Model R30 CPU Enclosure Installation and Service Guide,* SA23-2743
- *Supplemental Information for 7012 G Series Models, 7013 J Series Models, 7015 Models R30 and R40 (No order number — this book comes as part of the ship group with the SP hardware)*

Service

- *RS/6000 Problem Solving Guide*, SC23-2204
- *Common Diagnostics Micro Channel*, SA23-2765
- *7012 300 Series Operator Guide*, SA23-2623
- *7012 300 Series Installation and Service Guide*, SA23-2624
- *7013 500 Series Operator Guide*, SA23-2621
- *7013 500 Series Installation and Service Guide*, SA23-2622
- *Electrical Safety for IBM Service Representatives* S229-8124
- *Service Information Binder*, SX33-6060
- *7015 Model R30 CPU Operator Guide*, SA23-2742
- *7015 Model R30 CPU Service Guide*, SA23-2743
- *Supplemental Information for 7012 G Series Models, 7013 J Series Models, 7015 Models R30 and R40* (No order number — this book comes as part of the ship group with the SP hardware)

Network Queueing System/MVS (NQS/MVS)

- *IBM NQS/MVS Installing and Administering*, SC23-0232
- *IBM NQS/MVS Client User's Guide*, SC23-0231
- *IBM NQS/MVS General Information*, GC23-3684
- *IBM NQS/MVS Licensed Program Specifications*, GC23-0233

Network Connectivity

- *IBM LAN Cabling System Planning and Installation Guide*, GA27-3361
- *IBM Cabling System Optical Fiber Planning and Installation Guide* GA27-3943
- *IBM 8250/8260/8285 Planning and Site Preparation Guide*, GA33-0285
- *IBM 6611 Network Processor: Introduction and Planning Guide* GK2T-0334

Adapters

- *SP Switch Router Adapter Guide*, GA22-7310
- *FDDI Introduction and Planning Guide*, GA27-3892
- *FDDI User's Guide and Programming Reference* SC28-2823
- *Planning for Fiber Optic Channel Links* GA23-0367
- *IBM Token-Ring Network Introduction and Planning Guide* GA27-3677
- *RS/6000 Token Ring Adapter Card*, G511-1681
- *HiPPI User's Guide and Programmer's Reference* SA23-0369 and SA23-2488
- *AIX Parallel and ESCON Channel Tape Attachment/6000 Installation and User's Guide*, GA32-0311
- *9334 SCSI Expansion Units Operator Guide*, GA33-3232
- *9334 SCSI Model 010 and 011 Expansion Unit: Installation and Service Guide*, SY33-0165
- *9334 Model 500 and 501 SCSI Expansion Unit: Installation and Service Guide*, SY33-0167
- *SCSI-2 Fast/Wide Adapter*, SC23-2646
- *IBM SCSI-2 Fast/Wide Adapter/A Technical Reference* S83G-7545
- *Turboways 100 User's Guide ATM*, GA27-4057
- *9333 Model 010 and 011 High-Performance Disk-Drive Subsystem Operator Guide*, GA33-3208
- *9333 Model 010 and 011 High-Performance Disk-Drive Subsystem Installation and Service Guide*, SY33-0161
- *9333 Model 010 and 011 High-Performance Disk-Drive Subsystem Hardware Technical Information*, SA33-3209
- *9333 Model 500 and 501 High-Performance Disk-Drive Subsystem Operator Guide*, GA33-3234
- *9333 Model 500 and 501 High-Performance Disk-Drive Subsystem Installation and Service Guide*, SY33-0168
- *9333 Model 500 and 501 High-Performance Disk-Drive Subsystem Hardware Technical Information*, SA33-3235
- *IBM SCSI Tape Drive, Medium Changer, and Library Device Drivers Installation and User's Guide*, GC35-0154

Non-IBM Publications

Parallel Computing

- Almasi, G., Gottlieb, A., *Highly Parallel Computing* Benjamin-Cummings Publishing Company, Inc., 1989.
- Gropp, W., Lusk, E., Skjellum, A., *Using MPI*, The MIT Press, 1994.
- Message Passing Interface Forum, MPI: *A Message-Passing Interface Standard* Version 1.1, University of Tennessee, Knoxville, Tennessee, June 6, 1995.
- Foster, I., *Designing and Building Parallel Programs* Adison Wesley, 1995.
- Pfister, Gregory, F., *In Search of Clusters* Prentice Hall, 1995.

Tcl

- Ousterhout, John K., *Tcl and the Tk Toolkit* Addison-Wesley, Reading, MA, 1994, ISBN 0-201-63337-X.

Ascend GRF

Order according to your Ascend GRF IP switch model:

- Getting Started
- Configuration Guide
- Reference Guide

You can order the Ascend GRF as the IBM 9077.

Manual Pages for Public Code

The following manual pages for public code are available in this product:

SUP	/usr/lpp/ssp/man/man1/sup.1
NTP	/usr/lpp/ssp/man/man8/xntpd.8
	/usr/lpp/ssp/man/man8/xntpdc.8
Perl (Version 4.036)	/usr/lpp/ssp/perl/man/perl.man
	/usr/lpp/ssp/perl/man/h2ph.man
	/usr/lpp/ssp/perl/man/s2p.man
	/usr/lpp/ssp/perl/man/a2p.man
Perl (Version 5.003)	Man pages are in the /usr/lpp/ssp/perl5/man/man1 directory

Manual pages and other documentation for Tcl, TclX, Tk, and expect can be found in the compressed **tar** files located in **/usr/lpp/ssp/public**.

Introduction to System Planning

© Copyright IBM Corp. 1997

Chapter 1. Introduction to System Planning

IBM RS/6000 SP Systems, usually called SP Systems, are not just hardware and software. SP Systems are also a continually changing set of human requirements. In order to get the highest level of performance out of your SP System, you need to plan for all of the internal and external activities. SP System planning produces the solid foundation you will need for managing your RS/6000 SP as it evolves over time. Some of the basic areas you have to plan for include:

- Network design
- The physical equipment and its operational software
- Operational environments
- System partitions
- Migration and coexistence on existing systems
- Security and authentication
- Defining user accounts
- Backup procedures

This chapter gets your project team started on these planning tasks and as a further benefit, it will familiarize them with the SP System and how it can best be integrated into your operational environment.

If you have an SP System and want to move to a different level of AIX and PSSP software, you may also need to plan for migration and possibly for using migration tools such as coexistence or partitioning.

If you need, you can contract with IBM to plan and install your SP System. Contact your IBM representative if you want help with these tasks.

Save Your Old Manuals

If you are running mixed levels of PSSP in a system partition, be sure to maintain and refer to the appropriate documentation for whatever versions of PSSP you are running.

Planning Services

This optional IBM service offering provides a specialist on site to assist you with planning your implementation. Activities included as part of this offering include:

- Planning for integrating PSSP into your network
- Defining name service requirements
- Defining volume group and file system
- Planning for migration applications
- Defining accounting practices and policies
- Defining security policies.

For further details, call 1-800-CALL-AIX.

© Copyright IBM Corp. 1997

IBM representatives and IBM Business Partners can also obtain information on selecting the right type of node for a customer's system by referring to the document *Node Selection for the IBM SP System - Factors to Consider*

Author: Clive Harris
EMEA AIX Consultant
EMEA High-End Centre of Competence
IBM Basington, UK
Telephone (44) 343184
PROFS: NHBVM7(HARRIC2)
email: clive_harris@uk.ibm.com

Hardware Overview

The basic hardware components of an SP system are:

- Processor nodes
- Frames
- Optional switch
- A control workstation
- Network connectivity adapters

These components connect to your existing computer network through a Local Area Network (LAN), making the SP system accessible from any network-attached workstation.

Processor Nodes

The SP nodes are available in three types: thin nodes, wide nodes, and high nodes. Thin nodes are typically configured as compute nodes, while wide nodes are more often used as servers to provide high-bandwidth data access. However, no rigid rule governs the logical configuration of a node. You can configure a physical node type for the logical functions that best serve your computing requirements.

Except for the 604e high node, each processor node includes a minimum of 64 megabytes of memory, two gigabytes of direct access storage devices (DASD), and a method for Ethernet connection. The 604e high node has a minimum of 256 MB of memory and 4.5 gigabytes of DASD, and an Ethernet connection.

The SP system is scalable from one to 128 processor nodes that can be contained in multiple SP frames. An SP system's maximum size is based on the model type (or first frame) of the system. A single frame can contain from one to 16 processor nodes, depending on the node type. Starting with PSSP 2.3, the maximum number of high nodes that will be supported on a 128 node system increases to 64 (up from 16 with PSSP 2.2).

The frame spaces that nodes fit into are called drawers. A 79" frame has eight drawers, while a 49" frame has four drawers. Each drawer is further divided into two slots. One slot will hold one thin node. A wide node occupies one drawer (two slots) and a high node occupies two drawers (four slots).

Thin Nodes

The SP thin node is functionally equivalent to a IBM RS/6000 desktop system. **Thin nodes must be installed in pairs.** The node pair must be installed in the two slots of a single drawer, and the processor type must be the same for both nodes. This means thin nodes can be packaged 16 to a 79 inch frame.

Thin nodes contain either a IBM RS/6000 POWER or POWER2 processor. The thin processor node has four Micro Channel adapter (MCA) slots. It can have up to two SCSI disks packaged internally, and can have access to external storage devices attached through SCSI-2 adapter features. The Ethernet adapter for the SP Ethernet is integrated and does not use an MCA slot.

Wide Nodes

The SP wide node is functionally equivalent to a IBM RS/6000 deskside system with a IBM RS/6000 POWER2 processor. The wide node occupies a full drawer and can be packaged up to eight per frame. In addition to a maximum of four SCSI disks packaged internally, the wide node can have external storage devices attached through SCSI-2 adapters. It has seven MCA slots and also supports the High Performance Parallel Interface adapter. The Ethernet adapter for the SP Ethernet uses one MCA slot.

High Nodes

The high nodes are classified as a Symmetric Multi-Processing (SMP) systems that can have 2, 4, 6, or 8 PowerPC 604 processors running at 112 MHz. or 604e processors running at 200 MHz.

The high node occupies two full drawers of a frame. This means that a maximum of four high nodes can fit in a 79 inch frame. The high node is supported in the both the 79 and 49 inch frames with or without switch networks. The only switch type not supported with high nodes is the HPS-LC8. Power and Power2 nodes can exist in the same frame and in the same partition as the high nodes. However, the different physical sizes results in changes to the set of configurations which are supported.

Extension Nodes

Extension nodes are non-standard nodes that extend the SP system's capabilities but cannot be used in all of the same ways as standard SP nodes.

A specific type of extension node is a dependent node. A dependent node depends on SP nodes for certain functions, but implements much of the switch related protocol that standard nodes use on the SP Switch. Typically, dependent nodes consist of four major components. They are:

1. The physical dependent node that is housed independently from the SP frame.
2. The dependent node adapter which is a card mounted in the physical dependent node and is used to connect the dependent node to the SP system.
3. A logical dependent node which is an SP switch port and logically occupies an SP node slot that corresponds to the node's switch port.
4. A cable that connects the dependent node adapter to the logical dependent node or in other words, connects the extension node to the SP system.

A physical dependent node such as an Ascend GRF switched IP router, may have multiple logical dependent nodes, one for each dependent node adapter it contains.

If a dependent node like a switched IP router contains more than one dependent node adapter, it can route data between SP systems or system partitions. Data transmission is accomplished by linking the dependent node adapters in the IP router with the logical dependent nodes located in different SP systems or system partitions.

For switched IP router dependent nodes, a fifth optional category of components exists. These components are additional cards that fit into slots in the switched IP router. With them, you can scale your SP system into larger systems through high speed external networks such as a FDDI backbone.

Extension Nodes **require** a system that is operating at the PSSP 2.3 level.

Frames

A 79 inch frame has eight drawers and can house up to 16 thin nodes, eight wide nodes, or four high nodes. A 49 inch frame has four drawers and can therefore house up to eight thin nodes, four wide nodes, or two high nodes. High node support on the 49 inch frame is a new feature of PSSP 2.3. All three types of nodes can be mixed together in both frames.

The SP frame contains redundant power supplies; if one power supply fails, another takes over. The frame is also designed for concurrent maintenance; each processor node can be removed and repaired without interrupting operations on the other nodes.

An SP Switch-8 configuration can consist of either a short 49" frame with single phase power that supports up to four, 49" expansion frames, or one 79" expansion frame that supports up to eight nodes.

Both 79 inch and 49 inch frames will fit into one of four categories depending on how your SP system is configured. These categories are:

- Model frame.
- Expansion frame.
- Switch expansion frame.
- Logical switch expansion frame.

The *model frame* is always the first frame in an SP system. The base level model frame contains a power supply, and either a single high or wide node or a pair of thin nodes. You may add other nodes as frame space permits. If it is a switch capable frame, you may expand your system. Any other frames that you connect to the model frame receives one of the other three designations.

The base level *expansion frame* contains a power supply, an SP switch, and either a single high or wide node or a pair of thin nodes. You may add other nodes as frame space and system configuration rules permit. Additional expansion frames may be added as configuration rules permit. The model node and expansion frames communicate via switch to switch data transfers.

Switch expansion frames contain only SP switches; they do not contain any processor nodes. Switch expansion frames are used to connect processor frames that have maximized the capacity of their integral switch. Switch expansion frames can only transfer data within the local SP system. The base level switch expansion

frame contains up to four SP switches. That configuration will support 128 nodes on eight frames.

Logical switch expansion frames do not contain any switches. Instead, a logical switch expansion frame is an additional frame that you can add to a system that has a switch to take advantage of unused switch ports in certain configurations. For example, a switch has ports to attach up to 16 nodes and if you have a frame with eight wide nodes, only eight of those switch ports will be used. You can add an expansion frame next to the existing frame to take advantage of the eight unused switch ports.

Similarly, if your frame contains four high nodes, only four of the switch ports will be used. You can add up to three expansion frames containing all high nodes to take advantage of the 12 unused switch ports.

Note: Frames which have thin nodes **cannot** be used as logical switch expansion frames. Similarly if a frame has thin nodes and a switch with unused switch ports, it **cannot** have a logical switch expansion frame attached to the unused switch ports. Frames with thin nodes require an SP switch for expansion.

Scalable POWERparallel Switch

The SP Switch provides low latency, high-bandwidth communication between nodes, supplying a minimum of four paths between any pair of nodes. It consists of a switch assembly and the internal cables to support connection to 16 processor nodes in a system (one switch per frame). The SP Switch can be used in conjunction with the switched IP router to dramatically speed up TCP/IP, file transfers, remote procedure calls, and relational database functions. The SP Switch offers the following improvements over the High Performance series of switches:

- Higher availability
- Fault isolation
- Concurrent maintenance for nodes
- Improved switch chip bandwidth

The SP Switch Adapter connects each SP node to the SP Switch subsystem.

Note: An SP Switch Router Adapter is needed to connect the Ascend GRF switched IP router to the SP Switch.

High Performance Switch

High Performance switches are not compatible with Scalable POWERparallel (SP) switches. You cannot mix High Performance switches with SP switches in a system or in separate system partitions. To take advantage of the SP switch's performance, you must upgrade all switches to Scalable POWERparallel (SP) switches.

High Performance switches are being phased out and are not available for new systems, however, they will still be available for existing systems.

Control Workstation

The SP system requires a customer-supplied IBM RS/6000 workstation with a color monitor. The control workstation serves as a point-of-control for managing and maintaining the SP processor nodes. The workstation connects to each frame via an RS-232 line to provide hardware control functions. A system administrator can log in to the control workstation from any other workstation on the network to perform system management, monitoring, and control tasks.

The control workstation also acts as a boot/install server for other servers in the SP system. In addition, the control workstation can be set up as an authentication server using Kerberos. It can be the Kerberos primary server, with the master database and administration service as well as the ticket-granting service. Or it can be set up as a Kerberos secondary server, with a backup database and just the ticket-granting service.

Network Connectivity Adapters

Network connectivity is supplied by various adapters, some optional, that can provide connection to I/O devices, networks of workstations, and mainframe networks. Ethernet, FDDI, token-ring, HiPPI, SCSI, FCS, and ATM are examples of adapters that can be used as part of an SP system.

On boot/install server nodes, these adapters are need to support systems that contain nodes running on different PSSP release levels.

Software Overview

The SP system software infrastructure includes:

- AIX, the base operating system
- The Parallel System Support Programs (PSSP)
- Other IBM system and application software products
- Independent software vendor products

AIX

AIX provides operating system functions such as the AIXwindows user interface, extended real-time support, network installation management, advanced file system support, physical disk space management, and a platform for application development and execution. AIX provides UNIX functionality and conformance to industry standards for open systems.

IBM Parallel System Support Programs for AIX (PSSP)

The PSSP software provides a single point of control for administrative tasks and helps increase productivity by letting administrators view, monitor, and control system operation. The IBM Virtual Shared Disk device driver, which makes disks globally accessible; Performance Toolbox Parallel Extension for AIX (PTPE); and High Availability Control Workstation Connectivity (HACWS) function are also available with the PSSP software.

SP Planning Issues

If you are new to IBM RS/6000 SP Systems, usually called SP, you should read all of this book. The planning steps you take depend on where you are now and the system you want to end up with. Chapter 2, "Defining the System that Fits Your Needs" on page 11 helps you define an SP that meets your needs. The following list contains some of the major issues you need to consider when setting up your SP system.

- The type of computing your SP system will perform.
- Future expansion (scaling) plans for your system.
- The number of nodes you will need.
- The type of nodes you will need.
- The type of RS/6000 you can use for a control workstation.
- High Availability (system backup) requirements for data and hardware.
- Migration for system upgrades.
- The ability to use partitioning and coexistence as migration tools.
- Coexistence requirements and limitations.
- Possible operational benefits from using the Parallel Environment.
- The amount and type of data storage.
- External network connections for your SP system.

Remember, as your planning begins to shape your SP system, you will need to work closely with your hardware planners. Each software decision you make will create a corresponding requirement in hardware such as:

- Cables to connect frames, control workstations and extension nodes.
- The number and types of nodes will affect power and cooling requirements.
- Data recovery and connections to external systems will influence the types of adapters ordered.

Using SP Books for Planning

1. Use this book to plan your software. Make your decisions about what components to install, which nodes to use for what purposes, and how to plan system upgrades using migration, coexistence, and partitioning.
2. Use the *Planning Vol. 1, Hardware and Physical Environment* book to make sure you have the correct physical environment for your SP system.
3. Use the *Administration Guide* for the day-to-day running and management of your system.
4. Use the *Installation and Migration Guide* for new installations and system updates.
5. Use the *Command and Technical Reference* as a command and technical reference.
6. Use the *Diagnosis and Messages Guide* to help diagnosis problems and to get more information about messages.

Chapter 2. Defining the System that Fits Your Needs

This chapter helps you define a new RS/6000 SP system that meets your hardware and software computing needs. You will be asked to answer many questions about the type of system you want and you will be prompted to complete a set of worksheets as you progress through the questions.

Decision making is an iterative and recursive process. Therefore, you may find yourself modifying answers to questions you previously answered. Reviewing, and sometimes modifying, your plans is a necessary part of a thorough planning process. The output of this exercise should be a completed layout of your system hardware and software that will help you to prepare for your installation.

Contact Your Network Administrator

Connecting your SP to a network has important benefits because networking information is critical to the success of the RS/6000 SP installation. Network planning may seem at times to be complex but it is a necessary part of a thorough planning process. It is important to consider networking information early on in the process so do not delay contacting your network administrator.

As you plan your SP you'll make many decisions. The remainder of this chapter poses several questions for you to answer. Review these questions and become familiar with the types of information you will need to gather throughout the planning process:

This chapter contains sample worksheets for a hypothetical corporation called the `ABC Corporation`. Review these sample worksheets to see the decisions that the `ABC Corporation` made. Whenever decisions made by the `ABC Corporation` are shown, they will be in `constant width` format to help distinguish them from the regular text.

Your decisions will most likely be different from the `ABC Corporation`'s. This is natural since every company is different and the decisions you make should meet your corporation's needs.

As you go through these questions, fill in the worksheets in Appendix C, “SP System Planning Worksheets” on page 223 with the information about your system. Make several copies of all the worksheets first. You can change your mind as you go through the worksheets. You'll need these worksheets later when you want to add to your system.

Question 1: Do You Want a Preloaded SP or the Default Version?

You have the option of purchasing your SP with the default software installed or you can purchase one that IBM has preloaded with software to meet your organization's specific needs. There are two manufacturing based services available from which you can choose if you decide to purchase a preloaded version:

1. Standard Preload Service

© Copyright IBM Corp. 1997

By default, every SP system is delivered with the most current software level, including Program Temporary Fix (PTF), of AIX and PSSP installed on the nodes. A MKSYSB backup tape for the nodes that can be restored on each of the nodes and a tape that can be restored on the control workstation is delivered with the system. The tape for the control workstation contains installed versions of AIX and PSSP and a LoadLeveler install image.

The version of AIX and PSSP installed is determined by one of the following feature codes:

- FC #9423: AIX 4.2.1 and PSSP 2.3
- FC #9422: AIX 4.2.1 and PSSP 2.2
- FC #9410: AIX 4.1.5 and PSSP 2.2

Note: If you do not specify a feature code, IBM will install AIX 4.2.1 and PSSP 2.3.

For feature code #9410 (AIX 4.1.5 and PSSP 2.2), a complete installation of **all** MKSYSB images from tape for **both** the nodes **and** the control workstation will be required. Additional customization work including network configuration and the installation of any additional LPPs will have to be done on site.

2. Customized Preload Service

   This service installs AIX and PSSP components, as well as other IBM LPPs that you specify on the SP nodes and on the control workstation image. This service also performs network customization on the SP prior to its arrival at your site. You can obtain a list of supported LPPs using the following VM command (if you do not have access to VM, you can request that your IBM representative issue this command for you):

   ```
   TOOLS SENDTO USDIST MKTTOOLS MKTTOOLS GET SPCHRTPP TERS3820
   ```

   This service preloads any LPPs that are on the SPCHRTPP package with the exception of Netview for AIX V3 (5696-731) and AIX HACMP/6000 V4.2 (5765–A86).

   If you order this service, you must also order the following:

   - The installation service contract offered by the AIX Family of Services or by a certified IBM business partner.
   - A feature code 1250 on the SP (no charge).

   IBM will deliver MKSYSB backup tapes that you can use to restore each of the nodes and the control workstation.

   When you order this feature code, the AIX Family of Services representative will work with you to provide the required customization information to Manufacturing. To ensure complete customization, you must complete and return the worksheets found in this book at least 10 business days prior to the scheduled ship date. If this is not possible, network customization/configuration may still be an option because this requires the worksheets to be returned within 5 business days of the ship date. If no information is received within 5 business days of the ship date, the order will be altered to remove the feature code (1250) and provide default service instead.

   IBM also offers feature code 1251 which preloads the Oracle/Tuxedo solution on the SP system along with establishing the network IP address and host name conventions to match customer's environments. FC 1251 preloads the following OEM software packages:

- Oracle Parallel Server.
- BEA Tuxedo.
- Spectra Logic's Alexandria Backup and Archive Librarian.

This software pre-install **must** be part of the service offering contract. Ordering this feature assumes that you have obtained the appropriate licensing from Oracle for the SP install. Feature Code 1250 is a **prerequisite** to this feature.

Once IBM receives the information, IBM manufacturing will customize network information (including hostnames and IP addresses), install customer selected AIX and PSSP components and selected IBM licensed Program Products (LPP) on the control workstation image and on the SP nodes.

3. Additional SP Customization Services (based on cost-recovery charges)

   Additional customization services are available both in-house and on-site according to customer requirements. The Customized Solutions Group has a team comprised of skilled resources from both Austin and the POWER Parallel Development Lab in Poughkeepsie, New York to deliver the following services:

   - Pre-install Planning which includes a review of the control workstation, frame, network, and node configurations, the control workstation support matrix, planning for SP frame upgrades, and so on.
   - Design reviews focused on how to implement application suites on specific SP hardware configuration.
   - Highly Available Control Workstation (HACWS) customization.
   - HACMP/6000 design and implementation. This includes a complete integration from pre-sales consulting and design sessions through on-site integration.
   - Oracle Parallel Query installation, customization, and integration.
   - Lotus Notes server integration and Lotus Notes implementation with HACMP/6000.
   - DB/2 Parallel Edition implementation.

   For more information on these services, call 1-800-426-4955.

Steps to Receive Customized Preload Service

1. Order the installation services contract by contacting the AIX Support Family Project Office at 1-800-CALLAIX (1-800-225-5429) or a certified IBM business partner.
2. Select feature code 1250 from the configurator.
3. After placing the order for a 9076 on the configurator and after ordering the feature code 1250, IBM sends a note and two required files to the person who configured the order. The person is requested to pass these on to the AIX Family of Services representative assigned to the order. The two files that are sent are:

   - **orderno** WKBKSOFT
   - **orderno** WKBKNET

   where **orderno** corresponds to the six digit manufacturing order number.

If these files were not received, generically named versions are available using a request command from a VM userid:

```
REQUEST SP2INST FROM SP2INST AT KGNVMC
```

After receiving the files, you should rename them to have a file name that corresponds to the six digit manufacturing order number as follows:

```
RENAME SP2INST WKBKSOFT A orderno WKBKSOFT A
RENAME SP2INST WKBKNET A orderno WKBKNET A
```

4. The account team and installation service representative will work with you to fill in the required information in the two files. These files are online versions of the worksheets contained in this book.
5. Edit these files and fill in the information that is required. Ensure the files have a file name that corresponds to the six digit purchase order number for the order.
6. Return the files to SP2INST at KGNVMC at least 10 business days prior to the scheduled ship date from manufacturing.

In some cases, IBM may only be able to perform the network customization because the software customization has the longest lead time in manufacturing. However, in some cases, it may not be possible to perform any of the customization requested. In this case, the order will be altered to remove the feature code and IBM manufacturing will provide the default service instead. The IBM installation service representative can perform any further customization required by the customer.

If you have questions about either the Default Preload Service or the Customized Preload Service, please contact the Poughkeepsie Customized Solution Organization at:

- 1-800-426-4955
- VM USERID: JUSTASK at PKEDVM9
- Internet: JUSTASK @ vnet.ibm.com.

Include in the message your name, phone number, user ID, and order number. A member of the Customized Solution Department will then work with you to help make the installation a success.

Feature Codes 9423, 9422 and 9410

These preload features ship tapes and instructions with SP systems that simplify installation. Feature 9423 ships tapes for AIX 4.2.1 with PSSP 2.3 and service already installed. Feature 9422 ships tapes for AIX 4.2.1 with PSSP 2.2 and service already installed. Feature 9410 ships tapes for AIX 4.1.5 with PSSP 2.2 and service installed. Instructions and tapes are in a clear plastic bag inside a wooden frame shipping container.

The preload features provide two tapes each. The first tape is booted on the control workstation to load AIX and PSSP. The second tape contains an image that is copied to the control workstation and loaded on an SP node during a network boot/install.

With these features, SP nodes are shipped with the AIX 4.2.X preload installed. Default network addresses used in manufacturing must be changed to customer

network addresses during installation. AIX 4.2.X nodes can be customized without reloading. For AIX 4.1.5, nodes are overwritten and customized during the first install.

Question 2: Why Do You Need an SP?

Why do you need an SP? For LAN consolidation? For data mining? For engineering or scientific computing? See Figure 1 for some typical SP uses

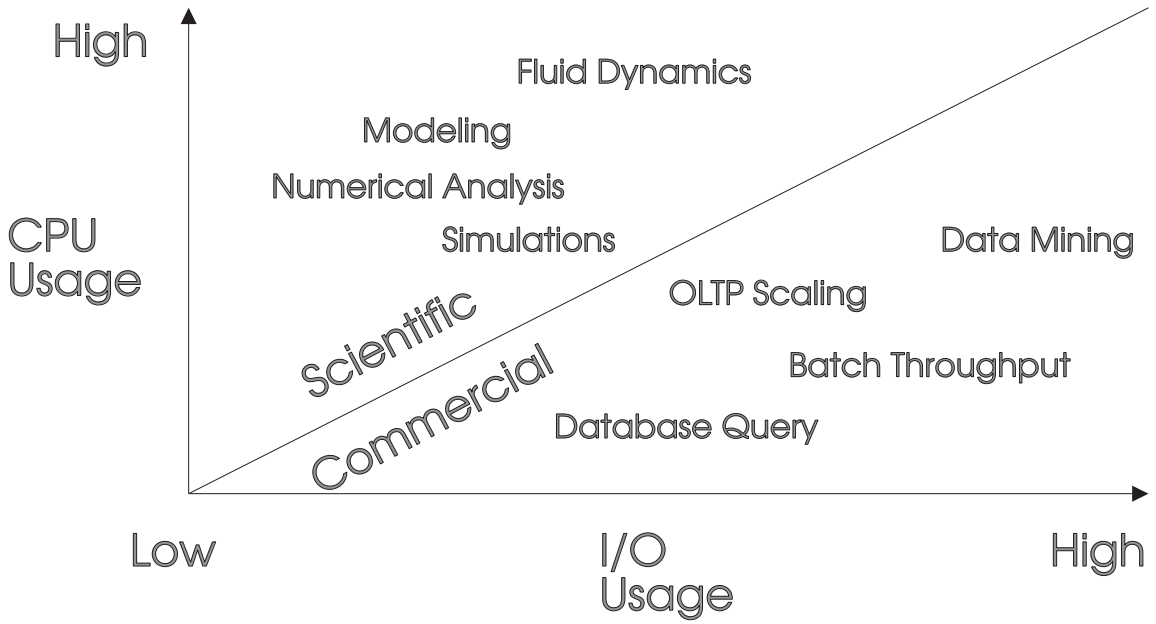

Figure 1. Typical SP Uses (not to scale)

What applications do you want to run on this system? Each SP node is a POWER2 node or a high node Power-PC processor running the AIX Operating System and some special SP support programs. Thousands of IBM RS/6000 applications can run unchanged on the RS/6000 SP with a single point of control for system management.

Parallel Computing

Along with this question, you need to decide whether you want to reap the benefits that parallel computing offers by running parallel applications. Parallel computing involves breaking a serial application into its logical parts and running those parts simultaneously. As a result, you can solve large, complex problems quickly.

Parallel applications can be broadly classified into two classes by considering whether the parallelism can be achieved through the use of a "middleware" software layer or whether the application developer needs to explicitly parallelize the problem by working with the source code and adding directives and code to achieve speedup.

Examples of a parallelized software layer are a parallel relational database such as DB2 Parallel Edition, or the Parallel Engineering and Scientific Subroutine Library (PESSL), which lets you execute an SQL statement, or call a matrix multiplication

routine, and achieve problem speedup without having to specify how to achieve the parallelism.

An example of explicit parallelism is taking an existing serial FORTRAN program and adding calls to a message passing library to distribute the computations among the nodes of the RS/6000 SP system. In this case, various parallel tools such as compilers, libraries and debuggers are required.

Choosing a Switch

Now that you have considered the types of applications you will run on the system, you are ready to decide whether you can benefit from an SP Switch.

Switch Feature	Description
Scalable POWERparallel Switch (SP Switch)	This switch (feature code 4011) offers 32 connections, 16 internal and 16 external. It connects all the processor nodes, providing enhanced scalable high-performance communication between processor nodes for parallel job execution.
Scalable POWERparallel Switch-8 (SP Switch-8)	This switch (feature code 4008) offers 8 internal connections to provide enhanced functions for small systems (up to 8 total nodes). It does not support scaling to larger systems.

Scalable POWERparallel Switch

The optional Scalable POWERparallel Switch (SP) provides low latency, high-bandwidth communication between nodes, supplying a minimum of four paths between any pair of nodes. Switches dramatically speed up TCP/IP, file transfers, remote procedure calls, and relational database functions. It consists of a switch assembly and the internal cables to support connection to 16 processor nodes in a system (one switch per frame). The SP Switch Adapter connects each SP node to the SP Switch subsystem. SP Switch capabilities include:

- Interframe connectivity and communication
- Scalability up to 128 node connections, including intermediate switch frames
- Constant bandwidth and latency between node pairs
- Support for Internet Protocol (IP) communication between nodes
- IP Address Resolution Protocol (ARP) support
- Support for dedicated user space access (via message passing libraries) and multiuser environments (via IP)
- Error detection and retry
- Fault isolation
- Concurrent maintenance for nodes

Switch Incompatibility

Although PSSP 2.1 and 2.2 supports both SP and High Performance switches, the two switch networks are not compatible and cannot be mixed within an SP system.

High Performance Switch

High Performance switch technology predates the SP switch series. High Performance switches are not compatible with PSSP 2.3. If you are planning on running nodes at PSSP 2.3 you must upgrade your switches to Scalable POWERparallel (SP) switches. High Performance switches will still be available for existing systems.

Listing Your Applications

List on Worksheet 1, “Preliminary List of Applications” inTable 33 on page 224 the applications you are considering. Check **parallel** √ and **Need Switch** √ if you know you need these functions. Put “?” if you are not sure yet. If you think of additional applications, you can add them to this list at any time.

Our hypothetical customer, `Corporation ABC` looked at their application requirements and filled in Table 1.

Table 1. Preliminary List of Applications For ABC Corporation

Worksheet 1		
SP Preliminary List of Applications		
Application	**Parallel**	**Need Switch**
DB2 Parallel Edition	√	√
AIX Performance Toolkit		
Customer Written Application	√	√

Save your list. You'll use it later in the planning process.

Question 3: What Related IBM Program Products Do You Need?

There are two sets of IBM Program Products that you must decide on. The first set of programs are part of your SP environment and the second set are programs that are for the AIX operating system or IBM C++ that runs on each node.

IBM C for AIX, V3 (Program 5765-423), is a pre-requisite of the PSSP. This is necessary for service of the PSSP. Without the compiler's pre-processor, dump diagnosis tools such as **crash**, will not function fully. You need at least a one-user license, but if you intend to do C development work, you will have to decide how many users you want to support at a given time.

There are many other program products for AIX that can add to your enterprise's productivity. For more information on these products, consult with your IBM representative.

The IBM AIX Parallel System Support Programs (PSSP) software is an integral part of your RS/6000 SP. It is the software that makes a collection of RS/6000 nodes

into an SP. PSSP helps a system administrator manage the RS/6000 SP. It provides a single point of control for administrative tasks and helps increase productivity by letting administrators view, monitor, and control system operation.

The SP software suite also includes a number of optional program products. A brief description of each product follows. If you think one of them may provide a service you want on your SP, ask your IBM representative. At the end of this section, you will find a worksheet where you can check off those program products you want.

IBM LoadLeveler

(Program Number 5765-145). LoadLeveler is an IBM software product that lets you build, submit, and process both serial and parallel jobs on your RS/6000 SP system, RS/6000 workstations, Silicon Graphics systems, Sun SPARCstation systems, and Hewlett-Packard systems. LoadLeveler is recommended, but not required, for batch processing on the SP system, and is included with the SP.

IBM Client Input Output/Sockets (CLIO/S)

(Program Number 5648-129). Client Input Output/Sockets provides high-speed transparent data transfer and tape access between MVS/ESA systems and AIX systems or between AIX systems. It provides a set of user commands and application programming interfaces that run on either MVS or AIX.

IBM's Network Tape Products for AIX

IBM provides two network tape products for AIX:

- IBM Network Tape Access and Control System for AIX (NetTAPE) (program number 5765-637)
- IBM Tape Library Connection (Tape Library Connection) (program number 5765-643)

NetTAPE improves and simplifies tape operations management and tape device access in IBM RS/6000 SP systems. NetTAPE offers:

- Consolidated tape operations for all network tape devices from a single graphical user interface.
- Transparent user access to remote tape devices using either command line interface or programming interface.

NetTAPE Tape Library Connection builds on NetTAPE, adding support for robotic tape library devices. These devices include:

- The IBM 3494, 3495, and 3575 Tape Library Dataservers.
- StorageTek™ Tape Library devices.
- SCSI-attached 4 mm, 8 mm, DLT, and DST autochangers and libraries.
- IBM 3590 and IBM Magstar MP devices in random mode.

NetTAPE Tape Library Connection also includes the ADSTAR Distributed Storage Manager device drivers for SCSI-attached drives and libraries.

Note: NetTAPE is a prerequisite product for NetTAPE Tape Library Connection.

IBM Parallel Environment for AIX

(Program Number 5765-543). The IBM Parallel Environment for AIX program product provides support for parallel application development and execution for the RS/6000 SP or on a single RS/6000 processor or a TCP/IP-networked cluster of IBM RS/6000 processors. The Parallel Environment product contains tools to support the development and analysis of parallel applications written in FORTRAN, C, or C++, and also provides a user-friendly runtime environment for their execution. Parallel Environment Ver. 2.3 has support for the Message Passing Library (MPL) subroutines, the Message Passing Interface (MPI) standard, and the Low Level Applications Programing Interface (LAPI).

Beginning with PSSP 2.3, high nodes operating at the PSSP 2.3/AIX 4.2.1 level will support the Parallel Environment.

Parallel Libraries

Multiple parallel libraries are available to make it easier for developers, especially those not proficient in advanced parallel processing techniques, to create or convert applications to take advantage of the parallel processors of the SP. Two IBM libraries are available for use on the RS/6000 SP:Parallel Optimization Subroutine Library (OSLp) and Parallel Engineering and Scientific Subroutine Library (PESSL).

IBM Parallel Optimization Subroutine Library

(Program Number 5765-392). The Parallel Optimization Library (OSLp) is a collection of high-performance subroutines for use by mathematical application programs that solve optimization problems. Parallel OSL helps you find the optimal solutions to several types of problems using linear programming, mixed-integer programming, and quadratic programming. OSLp subroutines can be called from FORTRAN, PL/1, APL2, and C programs at different levels.

IBM Parallel Engineering and Scientific Subroutine Library (PESSL)

(Program Number 5765-422). Parallel ESSL accelerates applications by substituting comparable math subroutines and in-line code with high performance, highly-tuned subroutines. Both new and current numerically intensive applications can call Parallel ESSL subroutines. The design of Parallel ESSL centers on exploiting SP operational characteristics and the architecture of the SP.

IBM Parallel I/O File System for AIX (PIOFS)

(Program Number 5765-297). The Parallel I/O File System is a high performance file system for the SP. PIOFS exploits the architecture of the SP on AIX 4.1 and later systems. It scales in file input/output performance just as the RS/6000 SP scales in computing performance by striping files across multiple server nodes.

IBM PVMe for AIX - Version 2.2 and 2.1

(Program Number 5765-544 and specify which version). The IBM PVMe for AIX program product is an implementation of the application program interface (API) defined by the public domain package PVM (Parallel Virtual Machine). The IBM PVMe for AIX program product now provides source and object compatibility with PVM 3.3.7, which is developed at Oak Ridge National Laboratory.

Versions Supported:

1. PSSP 2.3 **does not** support PVMe
2. PSSP 2.2 supports PVMe Ver. 2.2 on AIX 4.2.0 and 4.1.5
3. PSSP 2.1 supports PVMe Ver. 2.1 on AIX 4.1.5

Note: PVMe will no longer be supported after YE 1997.

IBM Recoverable Virtual Shared Disk – Version 2.1, 1.2 and 1.1.1

(Program Number 5765-646 Ver. 2.1) (Program Number 5765-444 Ver. 1.2) (Program Number 5765-444 Ver. 1.1.1). The IBM Recoverable Virtual Shared Disk program product lets you configure nodes as primary and secondary IBM Virtual Shared Disk server nodes. It provides transparent switchover to a secondary server node if the primary server node for a set of virtual shared disks fails. The base IBM Virtual Shared Disk support is included with the PSSP.

Versions Supported:

1. PSSP 2.3 supports Ver. 2.1
2. PSSP 2.2 supports Ver. 2.1 and 1.2 on AIX 4.2.0
3. PSSP 2.2 supports Ver. 1.2 only on AIX 4.1.5
4. PSSP 2.1 supports Ver. 1.1.1 only on AIX 4.1.5

General Parallel File System (GPFS)

The General Parallel File System (GPFS) provides concurrent shared access to files spanning multiple disk drives located on multiple nodes. This LPP provides file system service to parallel and serial applications on the SP. Your SP system must be utilizing IBM Virtual Shared Disks with the IBM Recoverable Shared Disk option installed.

Using GPFS, your SP system performance improves by:

- Allowing multiple processes to have simultaneous access to the same file through standard AIX file calls.
- Increasing aggregate bandwidth of file system and balancing disk loading.
- Allowing concurrent read and write actions, very important in parallel processing.
- Guaranteeing data consistency through a sophisticated token management system.
- Simplifying administration through simple, multiple node file system commands that function across the entire SP system.

Performance Toolbox Parallel Extensions for AIX

IBM Performance Toolbox Parallel Extensions for AIX (PTPE) collects and provides performance data for SP hardware and software. It is designed as an enhancement to Performance Toolbox for AIX, the preferred performance monitor for AIX systems. PTPE gives Performance Toolbox access to SP hardware and software statistics, and makes Performance Toolbox easier to use when monitoring a large number of systems. All this is done while retaining the same familiar interfaces to

the performance data that you have come to expect from Performance Toolbox for AIX.

PTPE is a priced feature of PSSP.

Selecting IBM Program Products

Our sample customer, `Corporation ABC` selected the products checked off in Table 2. You can check off the products that you want in Worksheet 2, "IBM Program Products To Order" in Table 34 on page 224.

Table 2. IBM Program Products Ordered by ABC Corporation

Worksheet 2			
IBM Program Products			
Order	**Program Product**	**Program Number**	**Level**
	IBM C for AIX	5675-423	3.1
√	IBM C++ for AIX	5765-421	3.1
	IBM Parallel System Support Programs for AIX (PSSP)	5765-529	2.2
	IBM LoadLeveler	5765-145	1.3
√	IBM Client Input Output/Sockets (CLIO/S)	5648-129	2.2
√	IBM Parallel Environment for AIX	5765-543	2.3
		5765-543	2.2
	IBM Parallel Optimization Subroutine Library	5765-392	1.3.0
	IBM Parallel Engineering and Scientific Subroutine Library	5765-422	1.1
		5765-422	1.2
	IBM Parallel I/O File System for AIX	5765-297	1.2
	IBM PVMe for AIX (PSSP 2.2 only)	5765-544	2.2
√	IBM Recoverable Virtual Shared Disk	5765-646	2.1
		5765-444	1.2
	NetTAPE	5765-637	1.2
	Tape Library Connection	5765-643	1.2
	General Parallel File System	5765-B95	1.1
	Interactive Session Support for AIX	5765-B67	1.1
Note: Add other AIX program products that you expect to use such as the C Set ++ for AIX or other compilers.			

Question 4: What Levels of AIX Do You Need?

New RS/6000 SPs come with AIX 4.2.1 and PSSP 2.3 installation tapes. You may need AIX 4.1 or 3.2.5 to support specific hardware. If you need AIX 3.2.5 for any applications or specific hardware, you cannot install the SP Switch option.

SP Micro Channel adapters that were supported in AIX 3.2.5, but were not in the initial release of AIX 4.2.1 are listed in the following table. If you have requirements for MCS adapters, check the latest AIX information to see whether support for them has been updated.

Table 3. AIX Devices Not Supported Beyond Release 3.2.5	
Devices	**Feature Number**
Fibre Channel Adapter/2	1906
S/390 ESCON Channel Emulator	2754

Your decision about software levels is also based on the new features available in new releases. The following sections briefly describe the new and changed functions in AIX 4.2 and PSSP 2.3. You should plan to order the system level that supports the functions you need.

What's New in AIX 4.2?

AIX 4.2 maintains all of the features of AIX 4.1 and adds new features that increase your system's usefulness. The following is a partial summary. For more detail, see your IBM representative.

- File sizes up to 64GB allowing users greater freedom in application development and in the creation and use of larger data sets.
- Device support up to 1 terabyte increasing attachment options and system capabilities.
- Graphical Workspace Manager iconifies active applications on a Common Desktop Environment (CDE) to increase user productivity through ease-of-use features.
- Auto-loading X-Windows simplifying installation.
- Year 2000 compliant
- Includes Adobe Acrobat™ and Netscape™ commercial products giving users easy access to online documentation.
- Network Installation Manager (NIM) guides users through software installation and distribution on SP nodes and external workstations.
- Definable multiple boot images and root volume groups. Provides you with a fall back mechanism for SP systems or partitions in case a problem is found in the system software, hardware, or application software. This requires two disks, each holding a complete copy of the operating system. If you want alternate boot system images, make sure you plan for enough disk space.

What's New in PSSP 2.3?

New features in Version 2 Release 3 of the IBM Parallel System Support Programs for AIX provide the following functional enhancements:

The Communications Low-Level Application Programming Interface (LAPI)

The Communications Low-level Application Programming Interface (LAPI) is an application programming interface designed to provide optimal communication performance on the SP Switch. LAPI accomplishes this by acting as a stack for simple, "put" and "get" data packet transfers. System efficiencies increase because information is transferred asynchronously and unilaterally; no system response is required between transmissions.

The LAPI provides the following advantages:

- Flexibility - process completion does not require a complementary action.
- Extendibility - provides for programmer-defined handlers that are invoked when a message arrives
- Performance – provides low latency on short messages
- LAPI also provides: reliability, flow control, support for large messages, non-blocking calls, interrupt and polling modes, and functions for enforcing ordering.

Note: You must be running with the Parallel Environment in order to utilize LAPI.

Extension Node Support

Extension nodes are non-standard nodes that extend the SP system's capabilities or scope, but can't be used in all the same ways as standard SP nodes.

A specific type of extension node is a dependent node. A dependent node depends on standard SP nodes for certain functions, but implements much of the switch-related protocol that standard nodes use on the SP Switch.

The specific dependent node implementation supported in this release is the attaching of an Ascend GRF switched IP router with one or more SP Switch Router Adapters to the SP Switch in order to provide higher bandwidth communications. Support includes:

- SMIT panels and commands for adding, changing, deleting, and listing SDR configuration information for the switched IP router and for the SP Switch Router Adapter.
- Modifications to the Communications Subsystem and SP Switch commands to accommodate the characteristics of a switched IP router.
- Simple Network Management Protocol (SNMP) support for transfer of switch-related configuration information from the SP system to the switched IP router.

Migration and Coexistence Support

Support is provided for migrating to PSSP 2.3 running on AIX 4.2.1 from the following PSSP releases:

- PSSP 2.2 on AIX 4.2.0
- PSSP 2.2 on AIX 4.1.5
- PSSP 2.2 on AIX 4.1.4
- PSSP 2.1 on AIX 4.1.5
- PSSP 2.1 on AIX 4.1.4
- PSSP 2.1 on AIX 4.1.3
- PSSP 1.2 on AIX 3.2.5

Support is provided for the coexistence of PSSP 2.3 in a system partition with other PSSP releases in the following configurations:

- PSSP 2.2 and PSSP 2.1
- PSSP 2.2 and PSSP 1.2

- PSSP 2.2
- PSSP 2.1
- PSSP 1.2

For more information on migration refer to Installation and Migration Guide.

IBM Virtual Shared Disk Enhancements

Enhancements to the IBM Virtual Shared Disk include:

- Support of fencing
- The ability to determine the size of an underlying Logical Volume on a server and to provide that information to applications

Refer to Managing Shared Disks for more information.

Improvements to Management of Kerberos Database and Services

Function is provided to make it easier for security administrators to manage the Kerberos authentication database and servers. New function in this release includes:

- The :pk.lskp:epk. command for listing principals in the local Kerberos database according to various criteria
- The :pk.rmkp:epk. command for removing principals from the local Kerberos database
- The :pk.chkp:epk. command for changing the current expiration or the maximum ticket lifetime of principals in the local Kerberos database
- The :pk.mkkp:epk. command for creating principals in the local Kerberos database

In addition, the Kerberos daemons kerberos, kadmind, and kpropd are now under the System Resource Controller and can be queried, stopped, and started with SRC commands.

For more information, refer to the Administration Guide and Commands and Technical Reference.

Automatic Installation of Initial Set of Network Tuning Parameters

The automatic installation on the nodes of an initial set of network tuning parameters is now provided. These initial network tuning parameters provide improved performance in a typical SP environment over the standard settings provided with base AIX.

In addition, three sets of network tuning parameters are provided that are designed to improve initial performance for the following environments:

- Commercial
- Development/interactive
- Engineering/scientific

Refer to the Administration Guide for more information.

Performance and Usability Enhancements

SP Perspectives is a set of applications, each of which has a graphical user interface, that enables you to perform system management tasks for your SP system. In this release the following improvements have been made to SP Perspectives:

- Performance for start up and execution of functions
- Scalability with small/large icon sizes and vertical panes
- Indexing of online help for retrievability

Switch Clock API

The new Switch Clock API provides subroutines for reading the switch clock. The API can be used wherever a highly synchronous and precise measurement of relative time is needed across nodes that are active on either a High Performance Switch or an SP Switch.

See the chapter on SP Subroutines in the *Command and Technical Reference* for further details.

Automounter Support

The Amd automounter is removed from PSSP 2.3 and is replaced with support for the AIX Automounter that is part of the AIX Network Support Facilities of the Base Operating System Runtime.

In addition, customization scripts are provided so that you can replace some of the AIX automounter function with your own options or you can use another automounter altogether.

If you are running older versions of PSSP on some of the nodes in your SP system, those nodes will continue to use the Amd automounter.

Refer to the Administration Guide for more information.

New Adapter Support for the SP LAN

The hardware adapters 2992 and 2993 are now supported for SP LAN use.

Support for GPFS and HACMP ES

PSSP 2.3 supports the new IBM Licensed Program Products General Parallel File Systems (GPFS) and High Availability Cluster Multi-Processor Enhanced Scalability (HACMP ES)

Removal of SP Print Management System

The SP Print Management System is removed from PSSP 2.3. We suggest that you use the Printing Systems Manager (PSM) for AIX.

If you are running older versions of PSSP on some of the nodes in your SP system, those nodes will continue to use the SP print management system.

Recording Your Decision for Question 4

Now you should know which level of AIX you need. If you need more than one level, you may require system partitions which are discussed in more detail in Chapter 5, “Planning SP System Partitions” on page 101. Note that AIX 3.2.5 can no longer be ordered after January 31, 1997. See your IBM representative for more information.

ABC's worksheet appears in Table 4.

Table 4. Operating System Level Selected By ABC Corporation

Check One Or Both	AIX	PSSP
	AIX 4.2.1	PSSP 2.3
√	AIX 4.1.5 or higher	PSSP 2.2
Note: If you checked more than one level, you must also check the system partition option in question 6.		

Question 5: What Type of Network Connectivity Do You Need?

In order to answer this question, you need to consult with your network administrator to decide how this system will connect into your existing computing network. As listed in Table 3 on page 22, some adapters may not be supported in AIX 4.1 when it is first available. Check with your IBM representative to find out when support is available for the adapters you want. Remember, you can still use these adapters by creating a system partition with AIX 3.2.5 installed on it and then migrate that partition to AIX 4.1 when the adapter support has been added. All the adapters work on wide, thin, and high nodes *except* the High Performance Parallel Interface adapter which is supported only on the wide and high node. You will be reminded of this when we discuss node types in question 8.

Review the following questions to determine the type of network connectivity your organization needs:

- Do you currently have a TCP/IP network?
- Do you intend to connect this network to the network of the SP and its control workstation?
- What type of physical ethernet LAN do you require? Default is BNC thin but thick is available.
- Do you have a TCP/IP address range? What is the address range and how is it subnetted? What subnet masks are employed? Will the address range be sufficient to cover the addresses of the SP and RS/6000 control workstations? Remember here to think about the future—if you are starting with a 10-node system but plan to grow to 100 nodes in the future—be sure to define an address range that is big enough to accommodate your future needs.
- Do you have a domain name? If so, what is it? How are IP addresses resolved to names and vice versa? Do you have DNS, NIS, or **/etc/hosts**? How are your domain name servers configured?
- What is the topology of your TCP/IP network? Where do you intend to connect the RS/6000 workstations and the SP into the network

For the SP and the control workstations, also consider the following:

- The RS/6000 SP with a switch has a minimum of two networks, the SP Ethernet that connects each node to the control workstation and the switch network. The two networks must each be assigned unique TCP/IP network addresses. If you have a switch, you must also plan for the switch network.
- In addition to the SP Ethernet and switch network, often additional communications adapters such as ATM or FDDI adapters are installed in the SP nodes. If this is the case, then separate TCP/IP network addresses need to be assigned. Have these networks been considered?
- What domain name will be assigned to the SP?
- What IP networks, addresses, subnet masks and default gateways will be assigned to the SP networks?
- Will machines be configured as primary and secondary name servers?
- What MVS considerations are there? If you currently have an MVS system, and if you plan to move large amounts of data (many gigabytes) between the MVS system and the SP, you may need CLIO/S. CLIO/S provides high-speech, low-overhead transfers over fast channel-to-channel connections. Planning for CLIO/S requires participation by both MVS and SP system planners. For more information on CLIO, refer to “Planning for IBM Client Input Output/Sockets (CLIO/S)” on page 145.

You may not have laid out your system requirements quite far enough yet to be able to answer all these questions fully. But do start to think about them and know that you will have to come back to them and fill in all the network information when the layout plan is complete. Also, read “Planning Your Network Configuration” on page 75 which will help you understand the SP network capabilities.

The worksheets for this question are with the worksheet for Question 8.

Network Connections Using an Extension Node

An Ascend GRF switched IP router (GRF) can be connected to the SP Switch via the SP Switch Router Adapter. The SP Switch Router Adapter provides a high performance, 100 MB/s, full duplex interface between the SP Switch and the Ascend GRF.

When the SP Switch Router Adapter is installed in a GRF, it allows the switched IP router to be used as a networking gateway for the SP system. The GRF may be populated with additional adapters for standard network interfaces, including:

- Ethernet
- 10/100BaseT
- FDDI
- ATM OC3c
- SONET OC3c
- ATM OC12c
- HIPPI
- HSSI

More than one SP Switch Router Adapter may be installed in an Ascend GRF switched IP router. These SP Switch Router Adapters may be connected to the same SP system, system partition, or to other SP systems. When multiple SP Switch Router Adapters are installed and connected to more than one SP system or system partition, they may be used to provide a high bandwidth link between SP systems or system partitions and to provide the SP systems or system partitions with a shared set of interfaces to external networks.

Each SP Switch Router Adapter requires one available node switch port on the SP Switch that meets the criteria for valid extension node ports as described in Chapter Three. A 10 meter SP Switch cable and a 10 meter ground strap are provided (other lengths are available) for connecting the SP Switch Router Adapter, located in the GRF chassis, to the SP Switch.

Question 6: What are Your Disk Storage Requirements?

Consult with your system administrator to answer this question. You need to understand your existing environment to be able to project your future disk requirements. In planning how much disk space you need, you should be aware of the following considerations that relate to internal and external disk storage.

Study these considerations and record your answers. Later you'll fill them in on the worksheet, “Hardware Configuration By Node” in Table 37 on page 227.

Make sure you have two disks if you want alternate boot system images. See “multiple boot images” on page 22.

Disk Space for Users' Home Directories

You need to decide where you will serve your users' home directories from; an existing server, or a new server.

Disk Space for System Programs

Installing AIX and some subset of PSSP and related products consumes disk storage on each node. Use the tables in “Determining Space Requirements” on page 72 to calculate the disk storage needed for AIX and PSSP and the related products.

Think about the program products and applications you plan to install. How much space do you need for /**usr**, /, and other file systems? For the /**spdata** file system, note that you will need extra space on the control workstation and boot/install servers if more than one level of AIX or PSSP is maintained on the system.

Will your applications be installed in rootvg with the base AIX programs or will they be installed elsewhere? Decisions like these may help you decide whether to add additional internal disks. Adding additional disks gives you the flexibility to preserve the application installation in the event that a node requires a reinstallation or a service upgrade.

Disk Space for Databases

Will you install any databases on your system? How many? How large? Are they production or development databases? What is the high availability strategy and do you require twin-tailed disks? What is the data protection strategy? Do you require disk mirroring or RAID 1 or RAID 5?

For each database you need to consider:

- How much temporary space is needed?
- How much space is needed for logging?
- How much space is needed for the database definition and data dictionary?
- How much space is required for rollback?

If you plan to use twin-tailed disks or disk mirroring, you must also take into account what types and how many adapters you will need. This may later determine the node models you need because thin nodes have fewer adapter slots.

Disk Requirements for the IBM Virtual Shared Disk

An IBM Virtual Shared Disk (VSD) is a subsystem that lets you assign empty volume groups located on any physical disks in any node within a partition. Once the volume group has been assigned to a VSD, application programs running in any node within that partition can access the VSDs as if it were a disk located in the node running the application.

If an application exploits the use of an IBM Virtual Shared Disk, you should **not** place anything on that VSD except volume groups. Other file systems located on VSD portions of a physical disk will cause problems. Similarly, you should not create AIX Journaled File Systems (JFSs) on volume groups that contain IBM Virtual Shared Disks.

An optional Program Product, the IBM Recoverable Virtual Shared Disk (RVSD), enhances VSD function by recovering information that would otherwise be lost if a VSD node were to fail. However, RVSD will only support recovering information from IBM Virtual Shared Disks, it will not recover data from non-VSD portions of the physical disk.

All IBM Virtual Shared Disks should be defined on external disk storage drives. Data residing on an internal disk that is not twin-tailed to another disk will be lost if the node containing that internal disk fails. That data loss will occur whether or not the IBM Recoverable Virtual Shared Disk is in use.

File System Requirements

You should plan ahead of time for expected growth of all your file systems. And, you should monitor your file system growth periodically and readjust your plans when necessary.

Boot/Install Server Requirements

The number of boot/install servers and the network layout of their Ethernet connections can affect the efficiency of your system. See “System Topology Considerations” on page 65 for recommended boot/install configurations for various system sizes.

External Disk Storage

If external disk storage is part of your system solution, you need to decide which type of the external disks offered for the SP best satisfies your needs.

One of the major decisions here is whether you want RAID (Redundant Arrays of Independent Disks) technology or not. RAID subsystems offer improved reliability over JBOD (Just a Bunch of Disks) subsystems. However, JBOD subsystems provide low cost disk storage media. Refer to the following table for more information on disk storage choices.

Disk Storage	Description.
7134	The 7134 subsystem, designed for a mix of I/O and throughput, provides low cost disk storage media and is employed where performance is not the critical characteristic of the parallel environment. The 7134 with up to 16 disks can support from 4.5GB to 72GB of data.
7133	If you require better performance, the 7133 Serial Storage Architecture (SSA) Disk may be the subsystem of choice for you. It provides more megabytes per second throughput at a higher cost than the 7134, but does not provide for high reliability. This is a good storage subsystem for transaction processing with small, random reads and writes, and for scientific environments. The 7133 can support from 4.5GB to 72GB of data per each SSA adapter. You can also connect up to 16 SSA adapters to a ring of disk drives.
7137 Disk Storage	The 7137 subsystem supports both RAID 0 and RAID 5 modes. It can hold from 4 to 33 gigabytes of data (29GB maximum in RAID 5 mode). The 7137 is the low end model of RAID support. If performance is not critical but reliability and low cost are important, this is a good choice.
7135	If performance and high reliability are key requirements, the 7135 is the subsystem of choice. It supports RAID modes R0, R1, R3, and R5. It has a 20MB/second SCSI-DE interface. **R0** 4.5 to 135GB of data **R1** 4.5 to 67.5GB of data **R3, R5** 4.5 to 108GB of data The 7135's high availability features include: • No single point of failure • Redundant power supplies and fans • A dynamically switched “spare” controller • Hot-pluggable disk drives and controllers

External Disk Storage Worksheet

The following table shows how the `ABC Corporation` specified their external disk storage needs. Record your external disk storage needs on Worksheet 3, Table 35 on page 225. You'll fold that information into Worksheet 4, the “SP Planning Worksheet” in Table 36 on page 225.

Table 5. ABC Corporations's External Disk Storage Needs		
Worksheet 3		
Check the external disk subsystems you require		
Quantity	**External Disk Subsystem**	**Disk Space (MB)**
	7133 (4.5 to 72GB)	
	7134 (4.5 to 72GB)	
1	7135 (4.5 to 135GB)	90 MB
	7137 (4 to 33GB)	

Question 7: What are Your Reliability and Availability Requirements?

What are your reliability and availability requirements? Who is going to use the SP? For some users reliability is not worth the cost. For others it is worth any cost and extremely important to keep their production system up and running. Two of the functions in PSSP that assist in reliability and availability are the High Availability Control Workstation and system partitions.

SP Switch systems provide enhanced availability.

High Availability Control Workstation

One function providing enhanced reliability is the High Availability Control Workstation (HACWS) which basically provides a second control workstation that, in effect, eliminates the control workstation as a single point of failure. When the primary control workstation becomes unavailable, either through a planned event or a hardware or software failure, the SP high availability component detects the loss and shifts that component's workload to a backup control workstation.

To provide this extra reliability and eliminate the control workstation as a single point of failure, you need both extra hardware and software as summarized in Table 6.

Table 6. Requirements for the High Availability Control Workstation	
Software	An additional AIX license
	1 HACWS software feature 3936
	2 licenses for HACMP/6000; 5050 High Availability feature (1)
Hardware	A second control workstation
	HACWS Connectivity Feature
(1) You do not need feature 5051.	

Planning and using the HACWS will be simpler if you configure your backup control workstation identical to the primary control workstation. Some components must be identical, others can be similar. Wait until the last question about control workstation hardware and software to specify the components. For now, you need only decide if you need HACWS support. For more information, refer to Chapter 4, “Planning for a High Availability Control Workstation” on page 89.

System Partitions

System partitions are another function that can aid in system availability. This function lets you logically divide the SP into non-overlapping groups of nodes called system partitions. You can then use a system partition to test new levels of AIX, PSSP, LPPs, application programs, or other software on a system currently running a production workload without disrupting that workload. The partitioning solution assumes that there are nodes available for the test system partition. A minimum system partition must consist of at least two drawers (or four slots).

An alternative method uses coexistence support provided with PSSP 2.3 that allows you to migrate one node of your system at a time. With co-existence, you are permitted to have multiple levels of PSSP operating within a single system partition.

Another good use for system partitions is to create multiple production environments with the same non-interfering characteristics that benefit a testing partition. With system partitions these environments are sufficiently isolated so that the workload in one environment is not adversely affected by the workload in the other, especially for services whose usage is not monitored and not charged for, but which have critical implications for jobs performance, for example, the switch. System partitions let you isolate switch traffic in one system partition from the switch traffic in other system partitions.

Initially, the system is a single partition. The number of system partitions you can define is dependent upon the size of your SP. See Chapter 5, “Planning SP System Partitions” on page 101 for complete information about system partitions. If you decide you want system partitions, study that chapter in more detail before completing your system plan. For now, you need to decide only if it is something you want or need and how many system partitions you think you'll need (you can come back and modify these answers if you learn new information that affects your answer).

Table 7. New Function Checklist

√	**Function**	
	Do you want the redundancy of a High Availability Control Workstation?	
	How many system partitions do you want? (1)	
		Will you run PSSP 2.3?
		Will you run PSSP 2.2?
		Will you run PSSP 2.1?
		Will you run PSSP 1.2?

(1) If you specified that you needed **both** PSSP 1.2 **and** PSSP 2.1, you must set up system partitions.

Question 8: How Many Nodes Do You Need?

Your answer to this question may be based on financial limits or it may be based on performance requirements. Keep in mind that the SP is “scalable” which means that you can add more nodes later. Your answers to the prior questions should have helped you determine the type of work for which you will be using the SP. For example, if you previously determined that you want to divide your system into partitions, this can affect the number of nodes you require. As mentioned

previously, the RS/6000 SP is scalable so you can select fewer nodes now and add more later or select more now and scale down later.

Some helpful hardware reference information is included here to help you select nodes. Much more detail about the hardware is available in *IBM RS/6000 SP Systems: Planning Vol. 1, Hardware and Physical Environment*

Along with deciding how many nodes you want, you must also decide what physical types of nodes you need. There are three physical types of nodes; wide, thin, and the high node.

- Thin Node

  There are two types of thin nodes, Thin and Thin Node 2. The Thin nodes have 64 kilobytes of data cache and a 64 bit memory bus. This node is designed for users who require the highest number of processors per frame at the higher levels of computational performance. The Thin Node 2 nodes have 128KB data cache and the bandwidth has been doubled with the addition of a second path for memory and the integer and floating point units (128 bit memory bus). The Thin Node 2 performs at increased levels for most commercial applications and has better floating point performance due to the larger bus bandwidths and cache.

  Both thin node types support four MCA slots and up to two SCSI disks packaged internally.

- Wide Node

  Wide nodes occupy two slots in a frame and have more Micro Channel slots to allow greater attachment options. (This decision is basically the same one as choosing between a desktop or a deskside model in the RS/6000 line).

  The wide nodes have 256 kilobytes of data cache, eight MCA slots and up to four SCSI disks packaged internally. The wide nodes greatly expand the I/O and network server functions of the SP.

- High Node

  The high node is classified as a Symmetric Multi-Processing (SMP) system that can have 2, 4, 6, or 8 POWERPC 604 processors running at 112 MHz. or 604e processors running at 200 MHz. The node includes 2 microchannel buses for I/O attachment including attachment to the SP Switch using the SP Switch adapters. The high node also includes a node supervisor through which hardware control and node conditioning are provided.

  The high node occupies two full drawers of a frame. This means that a maximum of four high nodes can fit in a 79 inch frame and only two in a 49 inch frame. The high node is supported in both frames with or without the switch. Power and Power2 nodes can exist in the same frame and in the same partition as the high nodes. However, the different physical sizes results in changes to the set of configurations which are supported.

- Extension Node

  Configuring a system using extension nodes require special planning regarding standard nodes.

  For all three standard node types, if you have a fully populated switch and you are ordering an Ascend GRF, you will have to reduce your node count by one.

This action is needed to open up a switch port for the SP Switch Router Adapter.

If you have decided to include extension nodes in your system, you must ensure that your system provides the switch ports needed for each logical node. For instance, each SP Switch Router Adapter in an Ascend GRF must be connected to a valid switch port on the SP switch. In other words, each dependent node logically occupies a frame slot and physically occupies the corresponding switch port. A standard node must not be assigned to the same slot, although it may overlap the slot. See Chapter Three for a description of valid extension node slots.

There are several basic model classes in the RS/6000 SP system, from a single-frame entry system to a highly-parallel, large-scalable system. The basic model classes are listed in Table 8.

Table 8. The Basic SP Model Switch Topology Classes

Model class	**Description**
Model 2Ax Class	Non-switched, 2-to-8 processor nodes, 49-inch frame (8 node total)
Model 20x Class	Non-switched, 2-to-64 processor nodes, 79-inch frame (8 node total)
Model 3Ax Class	SP Switch - 8-port switch, 2-8 processor nodes, 49-inch 4-frame system
Model 3Bx Class	SP Switch - 8-port switch, 2-8 processor nodes, 79-inch 2-frame system
Model 30x Class	SP Switch - single-staged switching, 2-to-80 processor nodes
Model 40x Class	SP Switch - two-staged switching, 64-to-128 processor nodes (5 frames minimum for second staged switch)

Table 9 (Page 1 of 2). SP Model Node Summary Matrix

Model	**Speed in MHz**	**Node Type (# of nodes / # of drawers)**	**Minimum-Maximum Memory Per Node**	**Minimum-Maximum Disk Space Per Node**
206	112	High (1 / 2)	64 MB to 2 GB	2 GB to 6 GB
207	135	Wide (1 / 1)	64 MB to 2 GB	2 GB to 36 GB
208	120	Thin (2 / 1)	64 MB to 1 GB	2 GB to 18 GB
209	200	High (1 / 2)	256 MB to 4 GB	4.5 GB to 18 GB
2A6	112	High (1 / 2)	64 MB to 4 GB	2 GB to 6 GB
2A7	135	Wide (1 / 1)	64 MB to 2 GB	2 GB to 36 GB
2A8	120	Thin (2 / 1)	64 MB to 1 GB	2 GB to 18 GB
2A9	200	High (1 / 2)	256 MB to 4 GB	4.5 GB to 18 GB
306	112	High (1 / 2)	64 MB to 2 GB	2 GB to 6 GB
307	135	Wide (1 / 1)	64 MB to 2 GB	2 GB to 36 GB
308	120	Thin (2 / 1)	64 MB to 1 GB	2 GB to 18 GB
309	200	High (1 / 2)	256 MB to 4 GB	4.5 GB to 18 GB
3A6	112	High (1 / 2)	64 MB to 4 GB	2 GB to 6 GB
3A7	135	Wide (1 / 1)	64 MB to 2 GB	2 GB to 36 GB
3A8	120	Thin (2 / 1)	64 MB to 1 GB	2 GB to 18 GB
3A9	200	High (1 / 2)	256 MB to 4 GB	4.5 GB to 18 GB

Table 9 (Page 2 of 2). SP Model Node Summary Matrix				
Model	**Speed in MHz**	**Node Type (# of nodes / # of drawers)**	**Minimum-Maximum Memory Per Node**	**Minimum-Maximum Disk Space Per Node**
3B6	112	High (1 / 2)	64 MB to 4 GB	2 GB to 6 GB
3B7	135	Wide (1 / 1)	64 MB to 2 GB	2 GB to 36 GB
3B8	120	Thin (2 / 1)	64 MB to 1 GB	2 GB to 18 GB
3B9	200	High (1 / 2)	256 MB to 4 GB	4.5 GB to 18 GB
406	112	High (1 / 2)	64 MB to 2 GB	2 GB to 6 GB
407	135	Wide (1 / 1)	64 MB to 2 GB	2 GB to 36 GB
408	120	Thin (2 / 1)	64 MB to 1 GB	2 GB to 18 GB
409	200	High (1 / 2)	256 MB to 4 GB	4.5 GB to 18 GB

System-Wide Worksheets

Now it's time to take all the information you have thought about and start to lay out your system requirements on detailed worksheets. These worksheets are an invaluable tool for helping you plan your configuration and installation in detail. If you have not done so already, make copies of the worksheets in Appendix C, “SP System Planning Worksheets” on page 223. The worksheets in this chapter have been filled out for our hypothetical customer, the `ABC Corporation`. `ABC`'s system-wide selections are in the “SP Planning Worksheet” in Table 10 on page 36.

You cannot have a combination of High Performance Switch and SP Switch adapters.

Table 10. Overall System Information

SP Planning - Worksheet 4

Customer Name_ABC Corporation___ **Date** _August 20, 1996____
Customer Number _999999___
Customer Contact _Jim Smith___ **Phone** _1-800-555-5678____
IBM Contact _Susann Burns___ **Phone** _1-800-555-6789___

SP Model						
	___206	___306	___406	___2A6	___3A6	___3B6
	___207	___307	___407	___2A7	___3A7	___3B7
	___208	___308	___408	___2A8	___3A8	___3B8
	___209	___309	___409	___2A9	___3A9	___3B9

Number of Frames	Number of Switches	Number of Thin Nodes	Number of Wide Nodes	Number of 604 High Nodes	Number of 604e High Nodes
_1_	_1_	_4_	_2_	_0_	_0_

External Disk Storage	7133	7134	7135	7137
	_____	_____	_1 90MB_	_____

Ascend GRF Switched IP Router: _____
SP Switch Router Adapter quantity: _____
Network Media Cards:

Type: _____	Type: _____	Type: _____
Quantity: _____	Quantity: _____	Quantity: _____

Fill in the remainder of this chart after you place your order
RS/6000 SP System Number _____
RS/6000 SP Purchase Order Number _____
Control Workstation System Number _____
Control Workstation Purchase Order Number _____
Peripheral Order Numbers _____

Fill in Worksheet 4, “SP Planning” in Table 36 on page 225 with the heading information, the SP model, the number of frames and switches, and the number of each node type you need. If you selected an external disk in “Question 6: What are Your Disk Storage Requirements?” on page 28, copy the information from that table to Worksheet 4 in Table 36 on page 225. Once you place your order you can fill in the order numbers for handy reference.

Completing the SP Node Layout Worksheets

To complete the Node Layout Worksheets, first you draw a diagram of your SP system. Then you add network information to that diagram. After that, you write your network information into the worksheets.

Our ABC Corporation drew a network in Figure 2 on page 37 and Figure 3 on page 38. You'll fill in as many copies of Worksheets 5 and 6, Figure 55 on page 226 and Figure 57 on page 227 as you need.

Complete the SP Node Layout Worksheets as follows:

1. For each frame, fill in the frame number and the switch number on the line marked **Frame Number** or **Switch Number** at the bottom of the diagram.

2. Indicate whether each node is a wide, thin, or high node using a unique identifier for each. For example, you could represent wide nodes with a *w*, thin nodes with a *t*, and high nodes with an *h*. Slot numbers have been indicated on each frame diagram. Wide nodes occupy two slots and use the odd-numbered slot number. Cross out the even slot numbers in all wide nodes. High nodes occupy four slots. Figure 2 shows a single frame with numbered slots (numbers in parentheses are switch port numbers) for our customer, the `ABC Corporation`.

   Note: If you are attaching extension nodes, create an indicator for each type. Using these indicators, mark the node slots that each extension node will logically occupy.

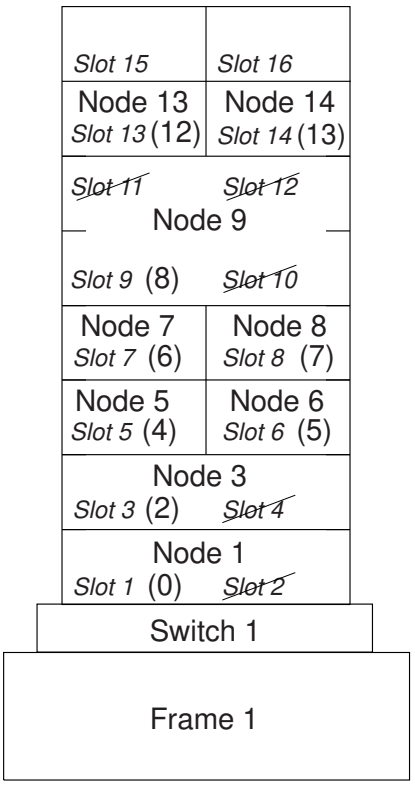

Figure 2. Node Layout Example For The ABC Corporation

3. Refer to "Understanding Node Numbering and Switch Node Numbering" on page 80 to learn more about node and switch numbering.

   At this point, your layout should look something like Figure 3 on page 38.

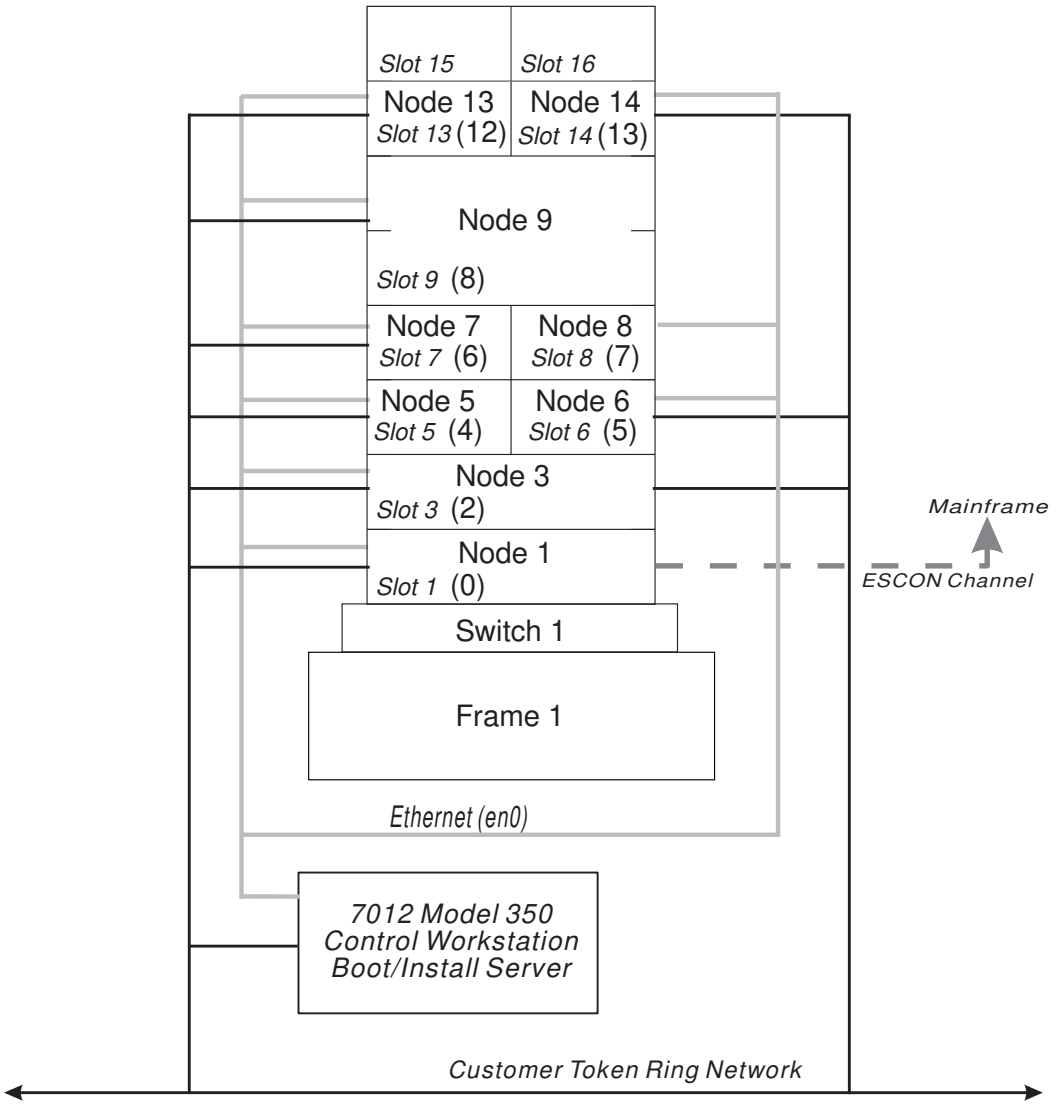

Figure 3. The ABC Corporation Node Layout Example With Communications Information

4. Sketch your SP Ethernet connections to each node and to the Control Workstation. Indicate specific adapter connections (for example, en0 and en1 connections). Refer to "System Topology Considerations" on page 65 for Ethernet tuning considerations.
5. Sketch your additional network connections.
6. Sketch connections to any routers, gateways, or networks.
7. Indicate network addresses, netmasks and hostnames for each subnet and node address on each node interface.

Processor Memory

At the same time you decide what types of nodes and how many you want, you also need to decide how much processor memory each node will have and how much internal disk storage. For Thin Node 2, you also have the option of L2 cache. Each of these values will affect the performance of your system, so choose carefully. `ABC Corporation` made the choices in Table 11.

Once you decide on this information, fill in Worksheet 7, "Hardware Configuration by Node" in Table 37 on page 227. You may need multiple copies of this worksheet depending on the number of nodes you plan to install.

Table 11. ABC Corporations's Choices For Hardware Configuration By Node

SP Hardware Configuration by Node - Worksheet 7						
Frame Number __1___			**Switch Number** __1___			
Slot Number	**Node Number**	**Node Type**	**Processor Memory**	**Internal Disk**	**L2 Cache**	**Adapters**
Slot 1	1	wide	256MB	18GB		token ring
Slot 2	--					
Slot 3	3	wide	256MB	18GB		token ring
Slot 4	--					
Slot 5	5	thin	256MB	9GB	1MB	token ring
Slot 6	6	thin	256MB	9GB	1MB	token ring
Slot 7	7	thin	256MB	9GB	1MB	token ring
Slot 8	8	thin	256MB	9GB	1MB	
Slot 9	9	high node	2GB	6GB		token ring FDDI
Slot 10	—					
Slot 11	—					
Slot 12	—					
Slot 13	13	thin	256MB	9GB	1MB	token ring
Slot 14	14	thin	256MB	9GB	1MB	token ring
Slot 15	—					
Slot 16	—					

Networking Information

Each adapter in each node, workstation, and router has an IP address. Each of these addresses should have a separate name associated with it.

During installation and configuration, all addresses, including the router addresses, must be resolvable into names. Likewise, all names both long and short, must be resolvable into addresses. If your network administrator or support group provides name-to-address resolution through DNS, NIS, or some other means, then they need to plan for the addition of all these names to their servers before the system arrives.

Host Names

Independent of any of the network adapters, each processor has a *host name*. Usually the host name of a processor is the name given to one of the network adapters in the processor.

While completing these tables, keep in mind that the host name in the table is referring to the name given to that adapter. You need to select which of these adapter host names should be the one given to the processor. An application may require that the processor host name be the name associated with the adapter over which its traffic will flow. Put a check (√) in the column of the adapter that will be the host name.

`ABC Corporation` completed the "Node Network Configuration Worksheets" starting in Table 12 on page 41. Review your network topology and fill in Worksheet 8, "Node Network Configuration Chart", starting in Table 38 on page 228. Be sure to make extra copies of the chart before you completing it. You need a chart for every frame you configured. If you have additional network adapters planned for some or all of your nodes, you need to plan their network information on this worksheet also.

Table 12. ABC Corporation

SP Node Network Configuration - Worksheet 8A

Company Name__ABC Corporation____
Date__June 25, 1995
Frame Number_1__
Token Ring Speed__16

Slot	SP Ethernet *en0 adapters)* Netmask__255.255.255.192__		Default Route
	Hostname (note 1)	IP Address	
1	spnode01	129.40.60.1	129.40.60.125
2	--		
3	spnode03	129.40.60.3	129.40.60.125
4	--		
5	spnode05	129.40.60.5	129.40.60.125
6	spnode06	129.40.60.6	129.40.60.125
7	spnode07	129.40.60.7	129.40.60.125
8	spnode08	129.40.60.8	129.40.60.125
9	spnode09	129.40.60.9	129.40.60.125
10	--		
11	--		
12	--		
13	spnode13	129.40.60.13	129.40.60.125
14	spnode14	129.40.60.14	129.40.60.125
15	--		
16	--		

Notes:

1. AIX is case sensitive. Use lower case for the hostname and addresses.
2. Wide nodes occupy two frame slots and use the *odd-numbered* slot number.

Table 13. ABC Corporation

SP Node Network Configuration - Worksheet 8B

Company
Name__ABC Corporation____
Date__June 25, 1995
Frame Number_1__
Token Ring Speed__16

Slot	Additional Adapter Netmask__255.255.255.192__			Default Route
	Adapter Name	Hostname (note 1)	IP Address	
1	tr0	sptok01	129.40.61.2	129.40.60.125
2	--			
3	tr0	sptok03	129.40.61.3	129.40.60.125
4	--			
5	tr0	sptok05	129.40.61.5	129.40.60.125
6	tr0	sptok06	129.40.61.6	129.40.60.125
7	tr0	sptok07	129.40.61.7	129.40.60.125
8				
9	tr0	sptok09	129.40.61.9	129.40.60.125
10	--			
11	--			
12	--			
13	tr0	sptok13	129.40.61.13	129.40.60.125
14	tr0	sptok14	129.40.61.14	129.40.60.125
15	--			
16	--			

Notes:

1. AIX is case sensitive. Use lower case for the hostname and addresses.
2. Wide nodes occupy two frame slots and use the *odd-numbered* slot number.

Switch Worksheet

If you are planning to install an SP with a switch, remember that the advantage of the switch is that it, too, has its own subnet. You need to plan for this network now, too.

Do you plan to enable ARP over the switch? If not, you need to derive the switch IP addresses from the address of the first node plus the switch node number.

Make copies of Worksheet 9, “Switch Configuration ” in Table 40 on page 230 before you start. Our hypothetical ABC Corporation filled out the following chart.

If you do not plan to have a switch, you can skip this worksheet.

Table 14. ABC Corporation's Choices For The Switch Configuration Worksheet

Switch Configuration - Worksheet 9			
Frame Number 1 **Switch Number** 1 **Netmask** 255.255.255.192			
Slot Number	Switch Node Number	Hostname	IP Address
Slot 1	0	spsw01	129.40.62.1
Slot 2	--		
Slot 3	2	spsw03	129.40.62.3
Slot 4	--		
Slot 5	4	spsw05	129.40.62.5
Slot 6	5	spsw06	129.40.62.6
Slot 7	6	spsw07	129.40.62.7
Slot 8	7	spsw08	129.40.62.8
Slot 9	8	spsw08	129.40.62.9
Slot 10	--		
Slot 11	--		
Slot 12	--		
Slot 13	12	spsw13	129.40.62.13
Slot 14	13	spsw14	129.40.62.14
Slot 15	--		
Slot 16	--		

Note: Refer to Table 12 on page 41 to see how this table would be completed.

Specifying Adapters

If you want to order other adapters for your nodes when you place your SP order, you can use Worksheets 10. The choices selected by ABC Corporation are noted on the following chart.

Table 15 (Page 1 of 3). Adapters Supported

Adapters Supported - Worksheet 10								
√	**Adapter**	**Feature code**	**Wide node** [1] **quantity per node**	**Thin node** [2] **quantity per node**	**High node** [3] **quantity per node**	**Number of slots Required**	**AIX 4.1**	**AIX 4.2**
	Internal Ethernet	Standard	N/A	1	N/A	0	yes	yes
	FCS Dwtr	1902 [7/8/11]	0 - 2	0 -1	N/A	0	yes	yes
	FCS 1GB	1904 [8/11]	N/A	N/A	N/A	1	4.1.4	no
	FCS 266MB	1906[11]	0 - 2	0 - 2	N/A	1	AIX 3.2.5 only	
	NetW TA 256	2402	0 - 7	0 - 4	0 - 4	1	no	yes
	NetW TA 2048	2403	0 - 7	0 - 4	0 - 4	1	no	yes

Table 15 (Page 2 of 3). Adapters Supported

Adapters Supported - Worksheet 10								
√	**Adapter**	**Feature code**	**Wide node [1] quantity per node**	**Thin node [2] quantity per node**	**High node [3] quantity per node**	**Number of slots Required**	**AIX 4.1**	**AIX 4.2**
	SCSI-2 Ext I/O	2410	0 - 7	0 - 4	N/A	1	4.1.4	yes
	SCSI Turbo	2412	0 - 7	0 - 4	0 -14	1	4.1.3	yes
	SCSI F/W DIF	2415	0 - 7	0 - 4	1 -14	1	4.1.1	yes
	SCSI F/W DIF	2416	0 - 7	0 - 4	0 - 14	1	4.1.1	yes
	SCSI EXT I/O	2420	0 - 7	0 - 4	N/A	1	4.1.4	yes
	4 port Multi Comm	2700	0 - 7	0 - 3	0 - 8	1	4.1.1	yes
	FDDI D/R	2723 [4]	0 - 3	0 - 2	0 - 8	1	4.1.1	yes
	FDDI S/R	2724	0 - 6	0 - 2	0 - 8	1	4.1.1	yes
	HIPPI[5/6]	2735	0 - 1	N/A	0 - 2[6]	5[5]	4.1.4	yes
	ESCON Chan Em.	2754	0 - 2	0 - 1	0 - 4	2	4.1.4	yes
	BMCA	2755	0 - 2	0 - 2	0 - 2	1	4.1.4	yes
	ESCON CNTRL	2756	0 - 2	0 - 1	0 - 4	2	4.1.4	yes
	8-port async 232	2930[9]	0 - 7	0 - 4	0 - 14	1	4.1.1	yes
	8-port async 422	2940[9]	0 - 7	0 - 4	0 - 14	1	4.1.1	yes
	X.25 inter co-p	2960	0 - 7	0 - 4	0 - 8	1	4.1.3	yes
	Token Ring	2970	0 - 7	0 - 4	0 - 12	1	4.1.1	yes
	Token Ring	2972	0 - 7	0 - 3	0 - 12	1	4.1.1	yes
	Ethernet	2980		0 - 3	1 - 8	1	4.1.1	yes
	ATM 100	2984	0 - 2	0 - 2	0 - 2	1	4.1.4	yes
	ATM 155	2989 [8]	0 - 2	0 - 2	0 - 2	1	4.1.4	yes
	Ether TP	2992	0 - 7[13]	0 - 3	N/A	1	4.1.4	yes
	Ether BNC	2993	0 - 7[13]	0 - 3	N/A	1	4.1.4	yes
	Ether BNC	2994	x	x	—	1	4.1	—
	HPS-2 (TB2)	4018	0 - 1	0 - 1	0 - 1	1	4.1.1	yes
	SPSw (TB3)	4020	0 - 1	0 - 1	0 - 1	1	4.1.1	yes
	Enet 10baseT	4224	0 -8	0 - 4	0 - 15	0	4.1.1	yes

Table 15 (Page 3 of 3). Adapters Supported

Adapters Supported - Worksheet 10								
√	**Adapter**	**Feature code**	**Wide node [1] quantity per node**	**Thin node [2] quantity per node**	**High node [3] quantity per node**	**Number of slots Required**	**AIX 4.1**	**AIX 4.2**
	HI-P Subsys	6212	0 - 4	0 - 2	0 - 8[10]	1	4.1.1	yes
	SSA	6214	0 - 4	0 - 2	0 - 8[10]	1	4.1.4	yes
	SSA	6216 [8]	0 - 4	0 - 2	0 - 8[10]	1	4.1.4	yes
	SSA 4RD	6217	0 - 4	0 - 2	0 - 8	1	4.1.5	yes
	Digital Truck	6305	0 - 6	0 - 3	0 - 2	1	4.1.1	yes
	Prtmstr 1MB	7006[12]	0 - 7	0 - 4	0 - 8	1	4.1.1	yes
	128 prt Cntrl	8128	0 - 7	0 - 7	0 - 7	1	4.1.1	yes

Note:

[1]: There are a total of 7 MCA slots available per wide node.
[2]: There are a total of 4 MCS slots available per thin node.
[3]:There are a total of 16 MCA slots per high node.
[4]: FDDI D/R adapters (F/C 2723) have a mandatory prerequisite of FDDI S/R adapters (F/C 2724)
[5]: The HIPPI feature uses 3 physical MCA slots and requires a total of 5 MCA slots to satisfy power and thermal requirements.
[6]: Hippi cannot be populated across the 2 micro channel buss on high nodes.
[7]: FCS Daughter card F/C 1902 does not require a micro channel slot.
[8]: These adapters are not supported on any 62MHz node, 201, 301, 2001, 1001.
[9]: This adapter has a co-requisite of 2995 feature cable.
[10]:The SSA Adapters in a high node are limited to a total count of 8 in any combination
[11]:1902, 1904, 1906 FCS adapters are not supported in the P2SC nodes which are the 135MHz wide nodes (F/C 2007) , and the 120MHz thin nodes (F/C 2008), nor are they supported on the SMP high nodes (F/C 2006).
[12]:7006 portmaster card requires the selection of 7042, 7044, 7046, or 7048.
[13]:The maximum of 2992 and 2993 in any combination is 8.

Note: If you order the SP Switch, you must order F/C 4020 for every node.

Question 9: Defining Your System Images

After determining the quantity and the type of nodes you need, you now decide what system image you want installed on which nodes. The system image is the collection of SP components that is stored at a node. You can have a different system image on every node, the same system image on every node, or any combination in between. As you make this decision, there are performance and system management implications to consider.

The biggest implication here is that if all the node images are the same, the installation and backup/restore functions are much easier. As discussed in the disk storage question, whether you install your applications on each node or on one node greatly affects the amount of disk storage space required for each node. While local node copies are quicker, they require separate upgrades and system backups.

If you decided to have system partitions, you need to decide how many partitions you want and what nodes go with what partition. To fully understand partitioning,

read Chapter 5, “Planning SP System Partitions” on page 101 before you make any decisions about system partitions.

Specifying More Than One System Image

Worksheets 11, 12, and 13 help you lay out each system image that you want to define for the SP nodes. The control workstation is defined in the next section. Make as many photocopies of the worksheets as you require; fill out one for each image you plan.

IBM provides a minimal system image (SPIMG) with the PSSP. It may or may not contain all the parts of AIX that you want installed on each node. For example, it does not contain AIXwindows support. The list of file sets in the minimal image is found in Table 43 on page 234. The "PSSP Memo to Users" will give you the latest information on the minimal images file sets. Make certain you use the listing for the PSSP level on your system.

When you come to the question about where you want to install the rootvg, you are deciding on which internal disk drive the SPIMG should be placed. You may be planning to install external disks, but IBM recommends that the SPIMG be placed on an internal drive.

To specify system images, the `ABC Corporation` filled out Worksheet 11, Table 16 on page 47. To specify PSSP components, they filled out Worksheet 13, Table 17 on page 48.

Table 16. ABC Corporation's Specifying the System Images

Specifying System Images – Worksheet 11	
System Image Name	SPIMG1
AIX Level	4.2.1
Partition Number	1
Install on Node Numbers	1, 3, 5, 6, 7, 8, 9, 13, 14
Specify *internal* **disks where you wish to install rootvg** disk 1	
Check here if you want only the SPIMG minimal image ____	
IBM Licensed Products	
	PSSP
	DB2 Parallel Edition
	IBM C for AIX
	IBM LoadLeveler
	CLIO/S
	IBM Parallel Environment for AIX
	IBM Recoverable VSD
Additional AIX Software	
	bosext2.ate.obj- async terminal emulator
	bosext2.dosutil.obj - DOS utilities
Other Applications	
	NFS

Table 17. File Set List for PSSP 2.3

PSSP 2.3 File Sets Worksheet – 13		
System Image Name __spimg1_____		
√	**File Set**	**Description**
√	ssp.st	Application programming interface for loading, unloading, and querying the job switch resource table.
√	ssp.ha	Availability subsystems which include heartbeat, Group Services, and Event Management.
√	ssp.perlpkg	Perl4 and Perl5
√	ssp.pman	Problem management
√	ssp.clients	SP Authenticated Client Commands
√	ssp.basic	SP System Support Package
√	ssp.css	SP Communication Subsystem Package (only if switch installed)
√	ssp.sysman	Optional System Management Programs
√	ssp.sysctl	SP Sysctl Package
√	ssp.authent	SP Authentication Server
√	ssp.public	Public Code Compressed Tarfiles
√	ssp.docs	PostScript, man pages, and HTML files for PSSP documentation
√	ssp.gui	SP System Monitor Graphical User Interface and SP Perspectives
√	ssp.jm	SP Resource Manager Package
√	ssp.top	SP System Partition Support
√	ssp.csd.vsd	IBM Virtual Shared Disk Package
√	ssp.csd.cmi	SP Centralized Management Interface Package for IBM Virtual Shared Disk
√	ssp.csd.hsd	IBM Virtual Shared Disk Data Striping package
√	ssp.csd.gui	Perspectives for IBM Virtual Shared Disk
√	ssp.csd.sysctl	IBM Virtual Shared Disk Usability Improvement
√	ssp.hacws	High Availability Control Workstation Support
√	ssp.ptpegui	PTPE graphical user interface
√	ssp.topsvcs	Topology services
√	spimg	Contains a single file with the mksysb image of a minimal AIX 4.2 system.
√	ssp.top.gui	Graphical user interface for System Partitioning Aid
√	ssp.spmgr	Extension Node SNMP Manager Support

Note:

For information on whether these file sets are installed on the control workstation and the node, refer to chapter 2 of the *Installation and Migration Guide*

Question 10: What Do You Need for Your Control Workstation?

When planning your control workstation you can view it as a server to the SP system applications. The subsystems running on the control workstation are the SP server applications for the SP nodes. The nodes are clients of the control workstation server applications. The control workstation server applications provide configuration data, security, hardware monitoring, diagnostics, a single point of control service, and, optionally, job scheduling data and a time source.

As in all servers the reliability of the servers will affect the availability of the clients. In this case the availability of the SP system as a whole is affected. See "Eliminating the Control Workstation as a Single Point of Failure" on page 91 for more details and what happens when a single control workstation configuration has a control workstation failure. When configuring your control workstation, availability of the resources should be a key consideration.

IBM offers multiple ways to configure the control workstation and each way enables a different level of reliability for the control workstation and the SP system:

- Single control workstation without using AIX fault tolerant functions.

  This configuration has no redundant or backup functions. Its advantage is a configuration that costs less and is less complex. Its disadvantage is that a single hardware or software component failure can affect the availability of the SP system.

- Single control workstation that utilizes AIX fault tolerant functions.

  This configuration has some redundant or backup functions but does not protect against all failures. Its disadvantage is that most software failures and base system hardware failures are not protected against. Its advantage is that it is a slightly more costly configuration than the single control workstation without using AIX fault tolerant functions but still less costly than an HACWS configuration.

- An HACWS (High Availability Control Workstation) configuration.

  This configuration provides the most reliability for the control workstation and the SP system. All hardware and software components are redundant which allows recovery from any single failure. Its disadvantage is that it costs more than the previous two control workstation configurations. Its advantage is that the SP system is better suited for production environments with this feature enabled.

  For more information on planning for HACWS, refer to Chapter 4, "Planning for a High Availability Control Workstation" on page 89.

Changes for the Control Workstation

The major planning changes for the control workstation are the migration from a /**usr** server, support for system partitions, the support for High Availability Control Workstation, additional lppsource directories, and SPOTs.

Migrating from /usr

AIX 4.1 and later no longer supports a /**usr** server. Therefore, if your AIX 3.2.5 and SP 1.2 was configured with a /**usr** server, you now must plan /**usr** space at the control workstation and at each node. Typically, you need to allow 200 MB to 800 MB for the /**usr** directory and its subdirectories.

Software and Hardware Requirements for Control Workstations

Required Software

- 5765-C34 or 5765-393 AIX Operating System, Release 4.2.1 server
- 5765–654 IBM Performance Toolbox for AIX, Agent Component V. 2.2.

  This product provides the capability to monitor your SP system's performance, collects and displays statistical data for SP hardware and software, and simplifies run-time performance monitoring of a large number of nodes.
- 5765-529 PSSP 2.3
- 5765-421 C Set ++ for AIX (C Compiler version 3.1.3).

  One license is required for the SP. Concurrent licensing is recommended so the one license can float across the SP nodes and the control workstation. It is needed for **crash** to work effectively and to obtain IBM software support for the SP system. You can order the license as part of the SP system. It is not specifically required on the control workstation if a license server for AIX for C++ exists some place in the network and the SP is included in the license server's cell.

Optional Software

The control workstation and its software are *not* part of the SP package and must be ordered separately. Make sure you have ordered them in time to arrive when the rest of your SP does. The HACWS software option is a priced feature of the PSSP, must be purchased in addition to the SP hardware, and is supplied on separate install media.

IBM AIX Hypertext Information Base Libraries V1.1 (5696-919) provides softcopy books of the AIX V4.2 documentation. Some of these books are not available in hardcopy with your software order and must be ordered separately. Although this is optional, its inclusion is strongly recommended.

For software requirements for the HACWS, refer to “Software Requirements for HACWS Control Workstation Configurations” on page 95.

Supported Control Workstations

The SP system requires a IBM RS/6000 workstation as a point-of-control for managing, monitoring, and maintaining the SP frames and individual processor nodes. See Chapter 4, “Planning Your Control Workstation” for more planning information about the control workstation. The control workstation you supply connects to each frame through an RS-232 cable and the SP Ethernet.

The following RS/6000s are supported as **MCA** control workstations:

- RS/6000 7013 Model 5XX
- RS/6000 7012 Model 3XX

- RS/6000 7012 Model GXX
- RS/6000 7030 Model 3XX

  Requires a 7010 Model 150 X-Station and display. Other models and manufacturers that meet or exceed this model may be used. An ASCII terminal is required as the console.
- RS/6000 7015 Model 9XX, and RXX in either the 7015-99X or 7015-R00 rack.

  Requires a 7010 Model 150 X-Station and display. Other models and manufacturers that meet or exceed this model may be used. An ASCII terminal is required as the console.
- RS/6000 7013 Model JXX

  Requires a 7010 Model 150 X-Station and display. Other models and manufacturers that meet or exceed this model may be used. An ASCII terminal is required as the console.
- RS/6000 7011 Model 25X (not recommended, total system performance is slow)
- RS/6000 7009 Model C10 and C20 (not recommended beyond one frame due to slow tty response)

The following RS/6000s are supported as **PCI** control workstations:

- RS/6000 7025 F30 PSSP 2.2 and above
- RS/6000 7024 E20 PSSP 2.2 and above
- RS/6000 7024 E30 PSSP 2.2 and above

Supported Control Workstations in Limited Environments

The following RS/6000 models are supported in limited environments:

- RS/6000 7006-41T/W is a supported control workstation if the High Availability Control Workstation (HACWS) feature is never going to be configured.
- RS/6000 7006-42T/W is a supported control workstation if the High Availability Control Workstation (HACWS) feature is never going to be configured or a new AIX 3.2.5 partition is not required. If an AIX 3.2.5 partition exists, it must have a 3.2.5 boot and install server as one of the SP nodes.

Unsupported Control Workstations

The following RS/6000 models are **not supported** as control workstations:

- RS/6000 7007 Model N40
- RS/6000 7008 Model XXX
- RS/6000 7011 Model 22X
- RS/6000 7011 Model M2X
- RS/6000 7011 Model 23X
- RS/6000 7020 Model 40P
- RS/6000 7025 Model F40
- RS/6000 7025 Model F50
- RS/6000 7247-82X

- RS/6000 7248-1XX Model 43P
- RS/6000 7249-851

Please Note:

Any RS/6000 not listed as either supported, supported in limited environments, or as unsupported, will not function as a control workstation.

Control Workstation Minimum Requirements

The minimum requirements for the control workstation are:

- At least 96MB of main memory. For better performance, 128MB of main memory is recommended.
- Four gigabytes of disk storage. If the SP is going to use an HACWS configuration, you can configure 2GB of disk storage in the rootvg volume group and 2GB in an external volume group.

  Because the control workstation is used as a NIM server, the number of unique file sets required for all the nodes in the SP system may be larger than a normal single system. You should plan to reserve 2GB of disk storage for the file sets, and 2GB for the operating system. This will allow adequate space for future maintenance, system **mksysb** images and LPP growth. Keep in mind that if you have nodes at different levels of PSSP, each node requires its own LPP source which will take up extra space.
- Physically installed with the RS-232 cable to within 12 meters of each SP frame.
- Equipped with the following I/O devices and adapters:
  - Three and a half inch diskette drive
  - Four or eight millimeter (or equivalent) tape drive
  - One RS-232 port for each SP frame
  - Keyboard and mouse
  - Color graphics adapter and color monitor. An X-station model 150 and display are required if a RS/6000 that does not support a color graphics adapter is used.
  - An appropriate network adapter for your external communication network. The adapter does not have to be on the control workstation. If it is not on the control workstation, the SP Ethernet must extend to another host that is not part of the SP. A backup control workstation does not satisfy this requirement. This additional connection is used to access the control workstation from the network when the SP nodes are down.
  - Ethernet adapters (thin BNC) for connection to the SP Ethernets.

    Each Ethernet net adapter can have only 30 network stations on a given Ethernet cable. The control workstation and any routers are included in the 30 stations.
  - A SCSI CD-ROM device

This device is highly recommended but not required. It can be used to hold the Info Explorer database. Also, installation of AIX 4.1 is much faster with CD-ROM media.

HACWS Minimum Requirements

The following requirements are in addition to the previous requirements:

- 2 Supported RS/6000 workstations

  Each of these RS/6000s must have the same set of I/O required for control workstations as listed above. They may be different models but the tty configuration **must** be exactly the same on each control workstation. The disks should be of the same type and configured the same way on both control workstations to allow the hdisk*x* numbers to be consistent between the two control workstations.

- External disk storage that is supported by HACMP and the control workstation being used:
  - 2 external disk controllers and mirrored disks are strongly recommended but not required. If a single external disk controller is used the control workstation single point of failure has not been eliminated but moved to the disk subsystem.
- The HACWS connectivity feature #1245 on each SP frame
- An additional RS232 connection for HACMP communication is needed if target mode SCSI is not being used for the HACMP communication.

Hardware Controller Interface Planning

Each frame of the SP must be attached to the control workstation by an RS-232 line connected to a serial port on the workstation.

Note: Most IBM RS/6000 Systems are equipped with two serial ports as standard equipment. You may use these serial ports for the first two frames. On HACWS configurations one of these serial ports may be used for HACMP communication which will reduce the number of frames to one for RS/6000s such as the model 250 or any supported RS/6000 that has only two adapter slots in it.

If you are attaching more than two frames or if the two standard serial ports on the control workstation are needed for other uses, then you must add a multiport serial adapter to the control workstation to provide the necessary connection points:

FC 2930 8-port asynchronous adapter
FC 2995 multiport interface cable

or

FC 2955 16-port asynchronous adapter
FC 2996 multiport interface cable

An alternative way to provide connection points and increase performance is to install the IBM 128-Port Async Subsystem, consisting of:

FC 8128 128-Port Asynchronous Controller
FC 8130 Remote Asynchronous Node 16-Port EIA-232
FC 8134 128-Port Asynchronous RJ45 Connector

Complete one set of worksheets for each control workstation you will configure. The `ABC Corporation` completed the worksheets “SP Control Workstation Image” Worksheet 14, in Table 18 on page 55 and “SP Control Workstation Network” Worksheet 15, in Table 19 on page 56.

You should complete Worksheet 14a “SP Control Workstation Image”, in Table 45 on page 240 and Worksheet 15 “SP Control Workstation Network”.

Table 18. Worksheet	
Worksheet 14	
SP Control Workstation Image	
Control Workstation Name	_____cws01
Model	___7012 - Model 350
Install rootvg on disk	___1___
Disk Space	___4GB
Memory Size	__128MB
Hardware Options and Adapters	
Type	**Quantity**
ATM	
Ethernet	1
FDDI	
Token Ring; Speed ___16MB	1
Multiport Serial Adapters	
8 mm tape drive	1
CD-ROM	1
IBM Licensed Products	
	AIX
	PSSP
	C for AIX
	LoadLeveler
	perfagent
Other Applications	
√	NFS

Table 19. Control Workstation Network Worksheet

SP Control Workstation Network - Worksheet 15

Name__ABC Corporation_____
Date__June 25, 1995
System Name__spsystem1__
Control Workstation Name__cws01__

Frame Hardware Control Connections (RS-232)				Control Workstation Network Connections (note 2)			
Frame Number	**Serial Port for RS-233 Control Line (note 1)**	**tty Device**		**Adapter**	**Hostname**	**IP Address**	**Netmask**
1	s1	tty0		en0	spcwsen0	129.40.60.125	255.255.255.192
				tr0	spcwstr0	129.40.60.1	255.255.255.192

Notes:

1. Use the SMIT **tty** menu or the **mkdev** command to configure these ports.
2. Use the SMIT **mkinet** menu or the **mkdev** command to configure your SP Ethernet connection.

Chapter 3. Defining the Configuration that Fits Your Needs

This chapter provides the information you need to plan to configure your system before installing it. There is an SP Site Environment Planning Worksheet in Appendix C, “SP System Planning Worksheets” on page 223 to use with this chapter. Once completed, you'll use this worksheet to:

- Review your installation plan with your IBM installation team
- Help you configure your system during the installation.

Make copies of Worksheet 16, **SP Site Environment** (page 243) before you begin.

The Impact of Software Planning on Site and Hardware Planning

Planning and configuring your SP system software has an impact on the SP site plan you select. The following sections discuss some of the system planning decisions you need to make, and their impact on performance and site (hardware) planning.

Planning Your Site Environment

You plan your site environment by entering site configuration information on the control workstation through SMIT panels or by using the **spsitenv** command. SMIT is the System Management Interface Tool, supplied as part of the PSSP software.

The installation and configuration scripts read the configuration information data and customize the SP configuration according to your choices. The entries you put on the worksheet are the entries you'll make on the SMIT panels.

You can easily change the choices discussed in the following sections any time after the installation. If you are unsure about any of these options, you can safely select the defaults, then change your selections later.

Using the Site Environment Worksheet

The following sections help you make decisions about your site environment. These sections are listed in the same order as the items in the **SP Site Environment Worksheet** on page 243. A brief description of the function of each area along with a discussion of the alternatives should give you enough information to fill out the worksheet. Detailed information about these and other system administration issues is in the section on managing the SP system in the *Administration Guide*

Remember, the defaults are designed to provide a workable SP system. You can change them later, if necessary.

Understanding Network Install Image Choices

The *install_image* attribute lets you specify the name of the default network install image to be used for any SP node when the install image field is not set. The default is **bos.obj.ssp.421**, shipped with the SP System.

If you configure one or more nodes of your SP System as boot/install servers, each will act as an intermediate repository for a network install image of the AIX

© Copyright IBM Corp. 1997

operating system. This network install image is a single file that occupies significant space on the file system of the boot/install server on which it resides.

You can reclaim this disk space by setting *remove_image* to **true**, which deletes this network install image after all new installation processes complete. Alternatively, you can retain the image to improve the speed of a successive install that uses this same image.

Note: This does not apply to the control workstation. The network install images are never automatically deleted from the control workstation.

Site Environment Worksheet Entries

You can set two attributes for these options. *install_image* lets you set the name of the default image. *remove_image* specifies what to do with the image after all installations are complete.

Table 20. Network Install Image Choices

	Worksheet Entries To Be Filled In
To do this....	*remove_image*
Remove the network install image after all installs have completed	**true**
Do not remove the network install image	**false** (default)

Note:

- Change default attribute values to suit your environment.
- Blank entries imply that you make no substitutions for these values.

Understanding Time Service Choices - Network Time Protocol (NTP)

By default the SP system uses Network Time Protocol (NTP) to synchronize the time-of-day clocks on the control workstation and SP nodes. There are several ways in which you may currently be synchronizing the time-of-day in your existing computing environment:

- You may already be using NTP, either locally or through the Internet
- You may be using some other time service software
- You may not have an established method for synchronizing the system clocks on the computing systems throughout your environment.

Kerberos ticket expiration depends on proper time synchronization, so the SP system provides several options for time keeping:

- If you have an established NTP time server, you can use it to synchronize and manage time on the SP system.
- You can choose an NTP time server from the Internet.
- You can run NTP locally on the SP system to generate a consensus time.
- You can choose not to use NTP at all, relying on another method at your site.

> **Note**
>
> The SP machines do not have system batteries. If you choose not to use NTP, you must have another way to manage clock synchronization.

- You cannot choose the control workstation or backup control workstation to be the time master.

See the chapter on managing NTP in the *Administration Guide*

High Availability Control Workstation Considerations

If installing the High Availability Control Workstation and you select **timemaster** to use as your site's existing NTP time server, both control workstations must use the site time server.

If you have installed the High Availability Control Workstation and use the Internet configuration, both control workstations get time from the Internet. This assumes both control workstations have access to the Internet.

Site Environment Worksheet Entries

There are three attributes to set for NTP. *ntp_version* defaults to **3** (the version shipped with the SP System). If your installation is using an earlier version of NTP, change this value. The other two attributes are described in Table 21.

Table 21. Time Service Choices

	Worksheet Entries To Be Filled In	
To do this....	*ntp_config*	*ntp_server*
Use your site's existing NTP time server to synchronize the SP system clocks.	**timemaster**	*hostname* of your current NTP time server
Use an NTP time service from the Internet to synchronize the SP system clocks.	**internet**	*hostnames* of time servers on the Internet*
Run NTP locally on the SP to generate a consensus time.	**consensus** (default)	
Do not use NTP on the SP; instead, use some other method to synchronize system clocks.	**none**	

Note:

- Change default attribute values to suit your environment.
- Blank entries imply that you make no substitutions for these values.
- * Refer to **README.public** in **/usr/lpp/ssp/public** for information on Internet time servers.

Understanding User Directory Mounting Choices—Automount Daemon

An automounter is an automatic file system that dynamically mounts users' home directories and other file systems when a user accesses the files and unmounts them after a specified period of inactivity. The automounter manages directories specifically defined in the automounter map files. Using an automounter will minimize system hangs and through mapping, will also provide a method of sharing common file system mount information across many systems.

Automounter daemons run independently on the control workstation and on every node in the SP system. Since these daemons run independently, you will be able to simultaneously run different automounters, if you have different levels of PSSP on your system. Also, a system configuration variable gives you the option of turning off the automount daemons on all or none of the system partitions.

Automount Considerations

PSSP 2.3 replaces the previous automounter daemon known as Amd with an AIX resident automounter daemon called Automount. Automount is less likely to hang and is easier to maintain than Amd. Both the AIX automounter and Amd provide the same basic functions, but Amd offers more customization options than the AIX automounter. Therefore, if you have a complex Amd configuration, you may not find equivalent functions using the AIX automounter.

Implementation of the AIX resident automounter requires PSSP 2.3 on the control workstations. Booting the control workstation creates all automounter directories, map files, and logs needed by the system. Booting the CWS also converts any existing user directory Amd map files into AIX resident automounter map files. If you have modified the user directory map files prior to upgrading your system, these conversion utilities may fail. All other map files will need to be converted manually by the customer.

Booting the SP nodes invokes a similar process creating node directories and logs. Map files are downloaded from the CWS to the nodes during node boot. Once it has been created, the user directory automounter map is updated automatically as users are added and deleted from the system provided you have configured SP User Management Services on the Control Work Station.

Automount uses NFS (Network File Systems) to mount or AIX to link directories. Nodes running PSSP 2.3 will operate Automount by default. Pre-PSSP 2.3 nodes will still run Amd and Amd will still be included with pre-PSSP 2.3 packages. However, Amd will no longer be supported by IBM for PSSP 2.3 and above. Therefore, it is up to your System Administrator to supply and maintain this software if you wish to run Amd on nodes operating at PSSP 2.3 or higher. As an alternative to Automount and Amd, you can also provide your own technique for directory access.

One method of directory access would be to leave the SP automounter support turned on and replace the default SP function with support you provide for using your own automounter. You would do this using a set of user customization scripts that would be recognized by the SP. Another method would be setting the configuration variable so that the automounter daemon is off for the entire system. You would then have to provide some other means for users to access their home directories. Alternatively, since the use of an automounter is optional, you may choose to not use an automounter on your SP system.

See the chapter on managing Automount in the *Administration Guide*

Site Environment Worksheet Entries

Only one attribute applies to the Automount option.

Table 22. User Directory Mounting Choices - System automounter support	
	Worksheet Entries To Be Filled In
To do this....	*amd_config*
Use **AIX Automounter** supplied with SP Parallel System Support Programs	**true**(default)
Use some other means of mounting user directories to the SP	**false**
Note: • Change default attribute values to suit your environment. • Blank entries imply that you make no substitutions for these values.	

Understanding Print Management Choices

The SP Print Management System has been removed from PSSP 2.3. That is, the SP Print Management System cannot be configured on nodes running PSSP 2.3. We recommend the use of Printing Systems Manager (PSM) for AIX as a more general solution to managing printing on the SP system.

However, if you are running earlier versions of PSSP on some of your nodes, the SP Print Management System is still supported on those nodes. Because of that, SP systems with pre-PSSP 2.3 nodes will have Print Management configured on the control workstation (even if the control workstation is at PSSP 2.3) for coexistence support.

If you are running mixed levels of PSSP in your system, be sure to maintain and refer to the appropriate documentation for whatever versions of PSSP you are running.

On nodes running PSSP 2.2 or earlier, the SP Print Management System programs bypass the standard AIX print command subsystem and route print output to one or more print servers. When spooling printer output, Print Management operates in either **open** or **secure** mode.

Open mode requires all users to have **rsh** privileges to the print hosts. Secure mode denies users **rsh** privileges; however, it requires the use of a special user account, with a default userid of **prtid**, to transfer the jobs to the print host. In secure mode, all print jobs are *owned* by this special user account. Your third option is to not use the SP print subsystem and use some other means of handling print output from your SP system. Standard AIX print queue support may be adequate for small systems.

Site Environment Worksheet Entries

You have three options for handling print output.

Table 23. Print Management Choices		
	Worksheet Entries To Be Filled In	
To do this....	*print_config*	*print_id*
Use the SP print subsystem in open mode	**open**	
Use the SP print subsystem in secure mode	**secure**	**prtid** (default) (userid of your print host)
Do not use the SP print subsystem	**false** (default)	
Note: • Change default attribute values to suit your environment. • Blank entries imply that you make no substitutions for these values.		

Understanding User Account Management Choices

User account management for the SP system is designed to fit in with your current computing environment. If you already have procedures in place for managing user accounts, you can configure the SP system to use them. Alternatively, you can use the set of commands and tools provided with the SP for this purpose. The SP uses a single /**etc**/**passwd** file replicated across all nodes in the SP system using the file collection technology. If you are using Network Information Service (NIS), these commands will utilize NIS. A set of customer commands is provided to interface to this function.

These options are offered to help you manage user accounts. These involve passwords and directory paths. Read the brief descriptions that follow and record your choices on the Site Environment Worksheet.

Password Management

The *passwd_file* lets you specify the name of your password file.

The default name of the password file is /**etc**/**passwd**.

The *passwd_file_loc* attribute should contain the hostname of the machine where you maintain your password file. This defaults to your control workstation. The value of the *passwd_file_loc* cannot be one of the nodes in the SP system.

Home Directories

Specify a default location for user home directories in the *homedir_server* attribute. If you are using Amd, the user management commands will use this hostname when building Amd maps. If you do not specify a default, the user management commands assume the host on which you enter the commands. You can override this value when adding or modifying a user account with the **spmkuser** and **spchuser** commands.

Use the *homedir_path* attribute to specify the path of user home directories. The default base path for user home directories is /**home**/*localHostname*. Change this value if you wish to set a different path as the default for your site. You can also override the default path with the **home** attribute on the **spmkuser** and **spchuser** commands.

See the chapter on managing accounts in the *Administration Guide*

Site Environment Worksheet Entries

Five attributes apply to SP User Management, but four of them are used only if you set *usermgmt_config* to **true**.

Table 24. User Account Management Choices

	Worksheet Entries To Be Filled In				
To do this...	*usermgmt_config*	*passwd_file_loc*	*passwd_file*	*homedir_server*	*homedir_path*
Do not use the SP user account management software	**false**				
Use the SP user account management software	**true**(default)	password server hostname (ctl wkstn - default)	name of the password file **(/etc/passwd)** (default)	hostname of the home directory server *(ctl wkstn)* (default)	**/home/**<name of your home directory server>

Note:

- Change default attribute values to suit your environment.
- Blank entries imply that you make no substitutions for these values.

Understanding System File Management Choices—File Collections

The SP file collection technology simplifies the task of maintaining duplicate files across the nodes of the SP system. File collections provide a single point of control for maintaining a consistent version of one or more files across the entire system. You can make changes to the files in one place and the system replicates the updates on the other copies.

The files that are required on the control workstation, the file servers and the SP nodes are grouped into file collections. A file collection consists of a directory of files which includes special master files that define and control the collection.

The file collection structure is created along with the initial installation and configuration of your SP system. You must decide which files to specify for replication.

See the chapter on managing file collections in *Administration Guide*

Site Environment Worksheet Entries

The SP system gives you the option of using file collections or not using them. If you choose to use them you must specify a unique (unused) userid for the file collection daemon along with a unique (unused) port through which to communicate.

Table 25. System File Management Choices			
	Worksheet Entries To Be Filled In		
To do this....	*filecoll_config*	*supman_uid*	*supfilesrv_port*
Do not use the SP file collection technology	**false**		
Use the SP file collection technology	**true** (default)	unique user ID (default **102**, username **supman**)	unique port number (default **8431**)

Understanding Accounting Choices

The accounting utility lets you collect and report on individual and group use of the SP system. This accounting information can be used to bill users of the system resources or monitor selected aspects of the system's operation.

Because the level of hardware resources is probably not distributed evenly across your SP system, you may want to charge different rates for different nodes. SP accounting lets you define *classes* or groups of nodes for which accounting data is merged, providing a single report for the nodes in that class. In addition, you can suppress or disable the collection of accounting data. Individual nodes within a class may be enabled or disabled for accounting.

Site Environment Worksheet Entries

The following attributes apply to SP accounting, but are used only if you set *spacct_enable* to **true**. Use *spacct_actnode_thresh* to specify the minimum percentage of nodes for which accounting data must be present. Use *spacct_exclusive_enable* to specify whether, by default, separate accounting records are generated for jobs having exclusive use of a node.

Use *acct_master* to specify which node is to act as the accounting master. The default value is **0** (the control workstation).

Table 26. Accounting Choices				
	Worksheet Entries To Be Filled In			
To do this...	*spacct_enable*	*spacct_actnode_thresh*	*spacct_exclusive_enable*	*acct_master*
Do not use the SP accounting	**false** (default)			
Use the SP accounting	**true**	**80**	**false** (default)	**0**

Note:

- Change default attribute values to suit your environment.
- Blank entries imply that you make no substitutions for these values.

For information on this utility and how to set up an accounting system, see the chapter on accounting in the *Administration Guide* and *AIX Version 4.1 System Management Guide*

Planning Your System Network

This section contains some hints, tips and other information to help in tuning the SP system. These sections provide specific information on the SP and its subsystems. By no means is this section complete and comprehensive, but it addresses some SP-specific considerations. Refer to the *AIX Versions 3.2 and 4 Performance Tuning Guide* for additional AIX tuning information.

System Topology Considerations

When configuring larger systems, you need to consider several topics when setting up your network. These are SP Ethernet, outside network connections, routers, gateways, and switch traffic.

When configuring the SP Ethernet, the most important consideration is the number of subnets you configure. Because of the limitation on the number of simultaneous network installs, the routing through the SP Ethernet can be complicated. Usually the amount of traffic on this network is low.

If you connect the SP Ethernet to your external network, you must make sure that the user traffic does not overload the SP network. If your outside network is a high speed network like FDDI or HIPPI, routing the traffic to the SP Ethernet can overload it. For gateways to FDDI and other high speed networks, you should route traffic over the switch. You should configure routers or gateways to distribute the network traffic so that one network or subnet is not a bottleneck.

If you expect a lot of traffic, then you should configure several gateways. You can monitor all the traffic on these networks using the standard network monitoring tools. For more information on these tools, refer to the *AIX Versions 3.2 and 4 Performance Tuning Guide*

Boot/Install Server Requirements

When planning for your SP Ethernet topology you should consider your network install server requirements. The network install process uses the SP Ethernet for transferring the install image from the install server to the SP nodes. Running lots of concurrent network installs will exceed the capacity of the SP Ethernet. The following are recommended guidelines for designing the SP Ethernet topology for efficient network installs. Many of the configuration options will require additional network hardware beyond the minimal node and control workstation requirements. There are also network addressing issues regarding to consider.

The boot/install server for the nodes in a PSSP 3.2.5 system partition must be on a node within that system partition.

Single Frame Systems

For small systems, you can use the control workstation as the network install server. This means that the SP Ethernet is a single network connecting all nodes to the control workstation. When installing the nodes, you should limit yourself to installing 8 nodes at a time because this is the limit of acceptable throughput on the Ethernet. Figure 4 on page 66 shows an Ethernet topology for a single-frame system.

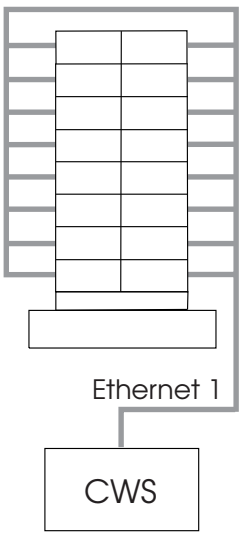

Figure 4. Ethernet topology for a single-frame SP

An alternative way to configure your system is to install a second Ethernet adapter in your control workstation, if you have an available I/O slot, and use two Ethernet segments to the SP nodes. Each network should be connected to half of the SP nodes. When network installing the frame, you can install all 16 nodes at the same time. Figure 5 shows this alternative Ethernet topology for a single-frame system.

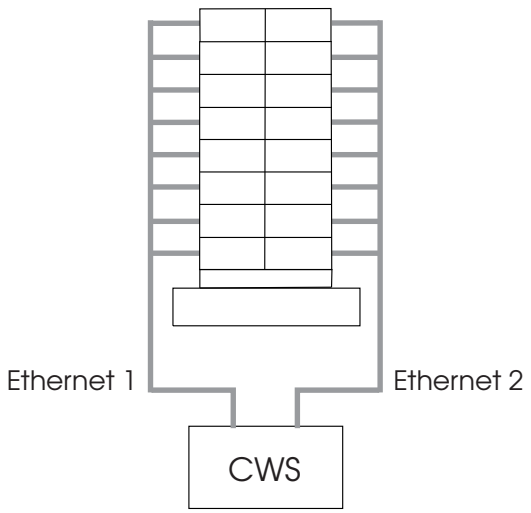

Figure 5. Ethernet topology for a single-frame SP

You have to set up your SP Ethernet routing so nodes on one Ethernet can communicate to nodes on the other network. You also need to set up your network mask so that each SP Ethernet is its own subnet within a larger network address. Consult your local Network Administrator about getting and assigning network addresses and network masks.

Multiple Frame Systems

For multiple frame systems, you want to spread the network traffic over multiple Ethernets, and keep the maximum number of simultaneous installs per network to eight. You can use the control workstation to network install specific SP nodes which will be the network install servers for the rest of nodes.

Following are three ways to accomplish this.

1. The first method uses a control workstation with one Ethernet adapter for each frame of the system, and one associated SP Ethernet per frame. So, if you have a system with four frames as in Figure 6, the control workstation must have enough I/O slots for four Ethernet adapters, and each adapter connects one of the four SP frame Ethernet segments to the control workstation. Using this method, you install the first eight nodes on a frame at a time, or up to 32 nodes if you use all four Ethernet segments simultaneously. Running two installs will install up to 64 nodes. Figure 6 shows an Ethernet topology for this multiple-frame system.

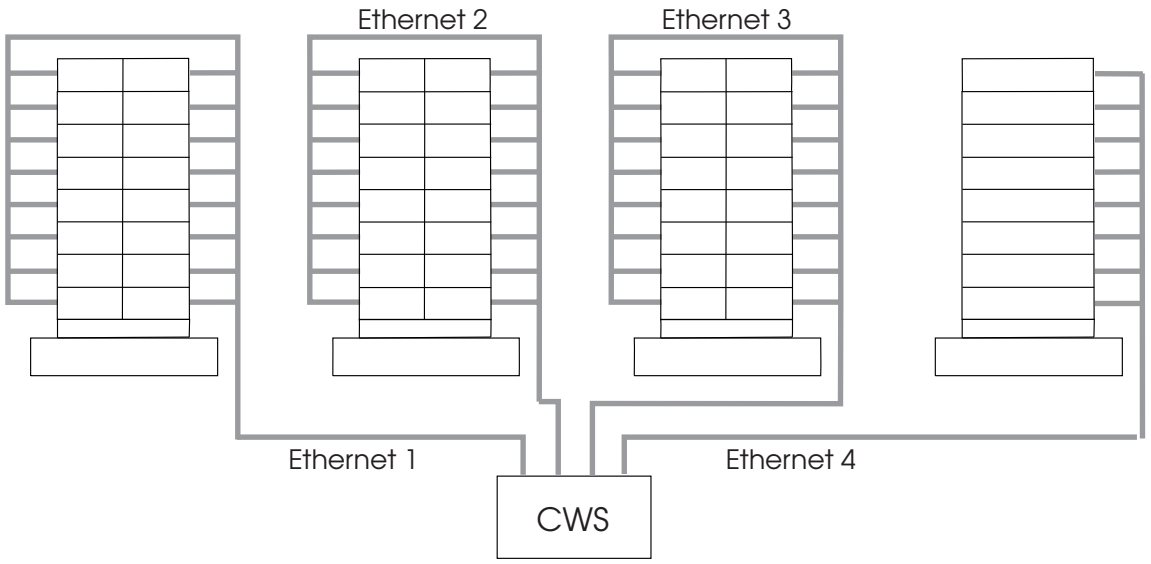

Figure 6. Method 1 Ethernet topology for a multiple-frame SP

Once again, you will have to set up your SP Ethernet routing so nodes on one Ethernet can communicate to nodes on another. You also need to set up your network mask so that each SP Ethernet is its own subnet within a larger network address. Consult your local Network Administrator about getting and assigning network addresses and network masks.

This method is applicable up to the number of slots your control workstation has available.

2. A second approach designates the first node in each frame as a network install server, and then the remaining nodes of that frame are set to be installed by that node. This means that, from the control workstation, you will have an SP Ethernet segment connected to one node on each frame. Then the network install node in each frame has a second Ethernet card installed which is connected to an Ethernet card in the rest of the nodes in the frame. Figure 7 on page 68 shows an Ethernet topology for this multiple-frame system.

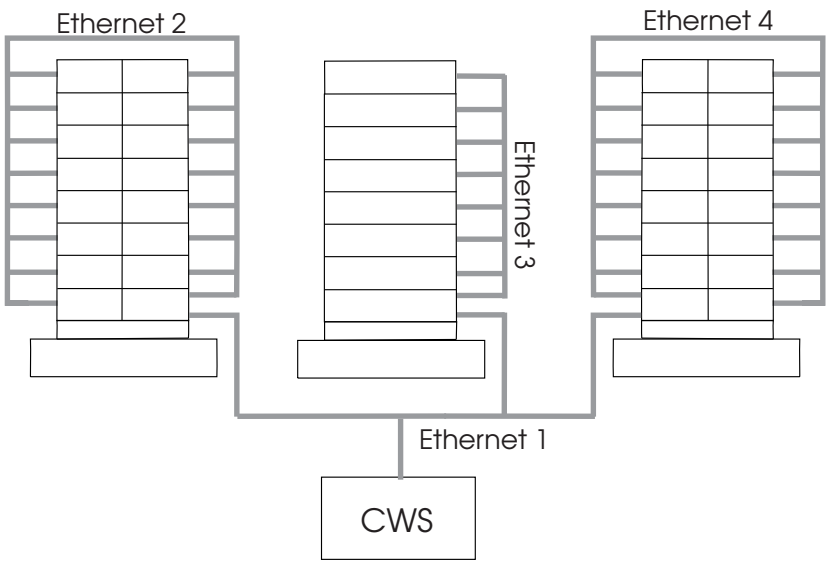

Figure 7. Method 2 Ethernet topology for a multiple-frame SP

When using this method, installing the nodes requires that you first install the network install node in each frame. The second set of installs will install up to eight additional nodes on the frame. The last install, if needed, installs the rest of the nodes in each frame.

Be forewarned that this configuration usually brings performance problems due to two phenomena:

a. All SP Ethernet traffic (installs, SDR activity, POE, etc.) is routed through the control workstation. The single control workstation Ethernet adapter becomes a bottleneck, eventually.

b. An application running on a node which produces a high volume of SP Ethernet traffic (for example, LoadLeveler) causes all subnet routing to go through the one control workstation Ethernet adapter. Moving the subject application to the control workstation may cut that traffic in half, but the control workstation must be large enough to accommodate that application.

You can improve the performance here by adding an external router, similar to that described in method 3.

3. A third method adds an external router to the topology of the previous approach. This router is made part of each of the frame Ethernets, so that traffic to the outside need not go through the control workstation. If the control workstation may also be attached externally, providing another route between nodes and the control workstation. Figure 8 on page 69 shows this Ethernet topology for such a multiple-frame system.

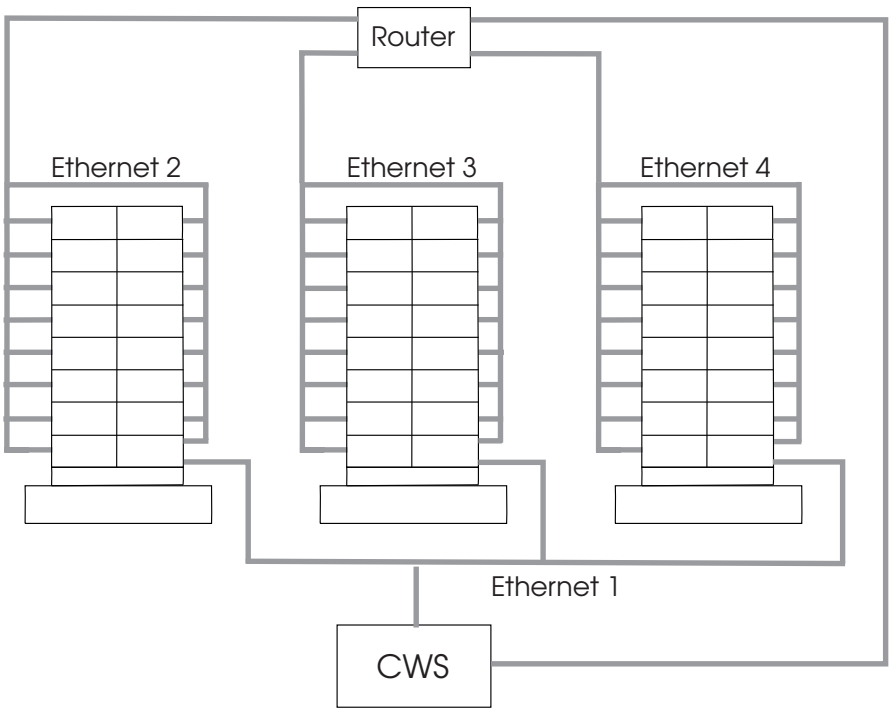

Figure 8. Method 3 Ethernet topology for a multiple-frame SP

An alternative to the router in this configuration is an Ethernet switch, which could have a high-speed network connection to the control workstation.

Future Expansion Considerations and Large Scale Configuration

If your configuration will grow over time to a large configuration, you might want to dedicate your network install nodes in a different manner.

For very large configurations you might want to dedicate a frame of nodes as designated network install nodes, as shown in Figure 9 on page 70. In this configuration, each SP Ethernet from the control workstation is connected to up to eight network install nodes in a frame. These network install nodes are in turn connected to additional frames.

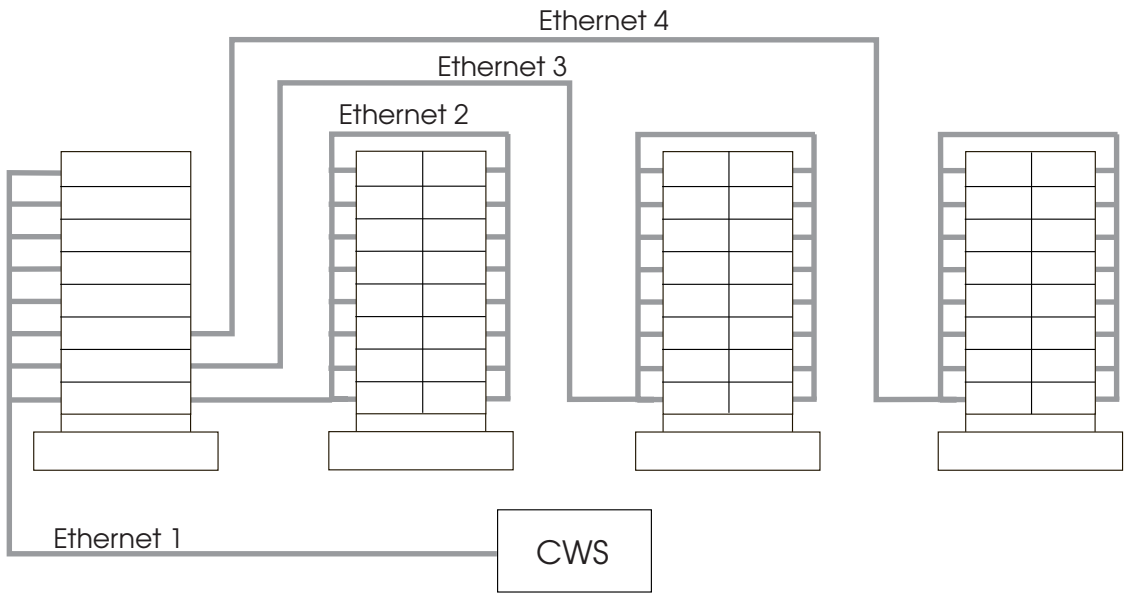

Figure 9. Boot Server Frame Approach

The advantage of this is that when you add an additional frame to your SP configuration, all you need to do is connect the new frame to one of the network install nodes, and reconfigure the system.

The network install procedure for this system is the same as for multiple frame systems. You first install the network install servers at a rate of eight per SP Ethernet segment. The network install servers then install eight other nodes until all nodes are installed.

The network address usually used for the SP Ethernet is a class C internet address. This address has a limit of 256 individual addresses before you need to add additional network addresses for the SP Ethernet. If your system is expected to grow beyond this number of nodes, you should plan with your Network Administrator additional network addresses for future SP Ethernet expansion. This will save you from having to re-assign the SP Ethernet addresses when you reach the address limit. In a system that consists of just Ethernet and the High Performance Switch, you cannot optimize so that you achieve peak performance on both networks. You have to decide which network you want to be affected.

Location and Reference Rate of Customer Data

Customer application data can be delivered to applications running on the SP from file servers. These file servers can be either internal SP nodes or separate external systems. The location of the data, how often you refer to it, and whether it is accessed in read-only or both read and write modes affect the performance of applications using this data. Applications that have a high data reference rate, especially those that read and write data, benefit from having the data closely located to the node on which the application executes. The “co-location” of data and applications minimizes the amount of network processing required to move the data to and from its file server.

Home Directory Server Planning

When planning for home directory servers, you must determine how much traffic will be generated by requests from the nodes to the server. Because some home directories are NFS, AFS, or DFS-mounted, you need to determine the amount of traffic in operations per second.

If the amount of traffic is greater than the capacity of a single network, you need to add additional networks and divide the number of nodes per network to the server. If the amount of traffic is greater than the capacity on the server, you need to configure additional servers, each connected to all networks.

Authentication Servers

When you install the SP system, you must define one or more authentication servers. Authentication provides a more secure SP system by verifying the identify of clients that access key systems management facilities. Your SP system's control workstation can be an authentication server, as can other independent workstations. The SP nodes should not be used as secondary servers. At least one secondary server is recommended for improved availability and possibly improved performance. You can install and configure PSSP authentication servers or integrate your SP system into an existing authentication domain, such as an AFS cell. If you choose to use AFS (Version 3.4 for AIX) authentication servers, note in particular the section on the assignment of TCP/IP port numbers in the **/etc/services** file.

You should carefully consider whether the SP control workstation will be an authentication server. You may want to set up your servers on independent RS/6000 workstations that are isolated by physical location or have limited network access. Your primary authentication server must be installed and operating before you install and configure your control workstation, unless it will be the primary server.

See *AIX Version 4 System Management Guide* and the *Administration Guide* for more information.

Understanding Node Hard Disk Choices

The *install_disk* attribute determines which disks are used to create the root volume group (**rootvg**) and to transfer the **mksysb** image during AIX network installation of a node. The default value of this attribute is **hdisk0**. Depending on your environment, you may have the installation include another hard disk.

If you plan to use the Alternate Boot System Image ability, the choice of two levels of software to boot per node, you must use only one disk in the *install_disk* attribute.

You may use more than one disk when the **mksysb** image is larger than the disk or when you need the root volume group to span multiple disks. The first disk in a node is not necessarily **hdisk0**. When you boot up a node, the first disk found is **hdisk0**. If you have a fast, wide external disk attached to a node, it may come up as **hdisk0**.

Check your disks to ensure your install image is on internal disks.

If you do not have either of these requirements, you should not install on more than one disk. If you have another disk, you can define a different volume group on that disk and import it. This lets you reinstall the node and import the volume group without having to back up and restore the data on the non-install disk.

To change the *install_disk* attribute, use the **spbootins** command with the **-h** option. See *IBM RS/6000 SP Systems: Command and Technical Reference* for more information on the **spbootins** command.

Determining Space Requirements

The PSSP is packaged as the following installation images, **pssp**, **spimg**, **ssp.csd**, **ssp.ptpegui**, and **ssp.hacws**. The following tables and calculations indicate the approximate space requirements.

Estimating Requirements for lppsource

The **lppsource** is a required resource for the Network Installation Management facility used to install AIX on the nodes. The amount of space this resource uses depends on how you use the resource. In addition, if you have multiple lppsource files, each lppsource takes up additional space.

You can download all of the AIX file sets from the AIX installation media. Although this takes more space than the minimal required file sets, this may save time and effort if you intend to use **installp** for additional file sets that are not already installed on your nodes. This is the recommended method because it makes it easier to perform additional **installp** installations.

Alternatively, you may download only the AIX file sets required by NIM to perform the mksysb installations on the nodes. The list of the minimal AIX file sets required appears in the Installation Guide, Chapter 2, which defines how to download the file sets.

Downloading all of the AIX file sets requires approximately 1.5GB of disk space.

Downloading only the minimal AIX file sets requires approximately 450MB.

You also need to determine what lppsource levels you need. In general, you will need one lppsource level for each AIX level that you intend to install (AIX 4.1.4, 4.1.5, 4.2.0 and 4.2.1). Each level will take approximately the same amount as described previously.

Estimating the Node Installation Image Requirements

When installing the nodes, a **mksysb** image is installed. The **mksysb** images are stored on the control workstation. **mksysb** images can vary in size from less than 100MB to larger than 700MB. If you intend to install one image on some nodes and another image on other nodes then you must also take into account the extra space requirements for multiple images.

Other installp Image Requirements

If you want to install additional Licensed Program Products (LPP) that are not part of the AIX installation media and are not included in the PSSP LPP, then you should also include the space that they require in your calculations. For example, POE, PVME, C++ are all additional LPP's that would require space in **spdata**.

Combining the Space Requirements

```
lppsource + mksysb_images + pssp_lpp_image = total_additional_space
```

The minimum space required for PSSP is shown in the following example:

```
450MB + 57MB + 128MB = 635MB
lppsource + PSSP spimg mksysb image + PSSP install fileset = Minimum Space
```

Table 27 indicates the amount of space the image takes up prior to installation. See Table 28 on page 74 for the amount of additional space required after installing a particular image.

Table 27. Space Required for Storing installp Images

Space Required for Storing installp Images		
installp Image	**Space Required**	**Description**
ssp	128 MB	This image must be stored on the control workstation. The name of the image file is pssp.installp.
spimg	57 MB + (for AIX 4.2.1)	This image must be stored on the control workstation.
ssp.csd	3.5 MB	This image can be stored on the control workstation or any other machine.
ssp.hacws	127 KB	This image must be stored on the control workstation.
ssp.ptpegui	1.9 MB	This image must be stored on the control workstation.

Table 28. Space Used by Individual File Sets	
Space Used by Individual File Se	
Space Used by PSSP image: ssp	
File Set	**Total Storage**
ssp.clients	10.8 MB
ssp.basic	5 MB
ssp.sysman	1 MB
ssp.css	10 MB
ssp.jm	1 MB
ssp.public	13.4 MB
ssp.gui	23 MB
ssp.docs	80 MB
ssp.sysctl	770 KB
ssp.authent	555 KB
ssp.top	1.3 MB
ssp.top.gui	2 MB
ssp.st	730 KB
ssp.ha	16 MB
ssp.perlpkg	8 MB
ssp.pman	670 KB
ssp.spmgr	570 KB
ssp.topsvcs	2.2 MB
Space Used by PSSP image: spimg	
File Set	**Total Storage**
spimg.421	57 MB
Space Used by PSSP image: ssp.csd	
File Set	**Total Storage**
ssp.csd.vsd	450 KB
ssp.csd.cmi	115 KB
ssp.csd.hsd	156 KB
ssp.csd.sysctl	370 KB
ssp.csd.gui	3.5 MB
Space Used by PSSP image: ssp.hacws	
File Set	**Total Storage**
ssp.hacws	120 KB
Space Used by PSSP image: ssp.ptpegui	
File Set	**Total Storage**
ssp.ptpegui	1.9 MB
Note: The total storage can cross multiple file systems.	

Planning Your Network Configuration

This section discusses what you need to know to plan your network configuration. Instructions for completing the remaining system planning worksheets begin in Chapter 2, “Defining the System that Fits Your Needs” on page 11 and are summarized in Appendix C, “SP System Planning Worksheets” on page 223.

Name, Address, and Network Integration Planning

You must assign IP addresses and host names for each network connection on each node and on the control workstation in your SP system. This repeats information contained in “Completing the SP Node Layout Worksheets” on page 36. This repetition is important because of the information's importance.

Because you probably want to attach the SP system to your site networks, you need to plan how this will be done. You need to decide:

- What routers and gateways you will use
- What default and network routes you need on your nodes
- How you will establish these default and network routes (that is, using **routed** or **gated** daemons or using explicit route statements).

You need to ensure that all of the addresses you assign are unique within your site network and within any outside networks to which you are attached, such as the Internet. Also, you need to plan how names and addresses will be resolved on your systems (that is, using DNS name servers, NIS maps, /**etc**/**host** files or some other method).

Note

All names and addresses of all IP interfaces on your nodes must be resolvable on the control workstation and on independent workstations set up as authentication servers before you install and configure the SP.

Once you have set the host names and IP addresses on the control workstation, you should not change them.

Some name resolution facilities let you map multiple IP interfaces to the same hostname. For the SP, IBM recommends that you assign unique hostnames to each IP interface on your nodes.

Understanding the SP Networks

You can connect many different types of LANs to the SP system but regardless of how many you use, the LANS fall into one of the following categories:

SP Ethernet

SP Ethernet is the name of the LAN that connects all SP nodes to the control workstation. The Parallel System Support Programs (PSSP) use this connection for net installs and other SP functions.

You can attach the Ethernet to other site networks and use it for other site-specific functions. You assign all addresses and names used for the Ethernet.

You can make the connections from the control workstation to the nodes in one of three ways. The method you choose should be one that optimizes network performance for the functions required of the SP Ethernet by your site. The three connection methods are:

- Single-subnet, single-stage SP Ethernet in which one interface on the control workstation connects to all SP nodes.
- Multiple-subnet, single-stage SP Ethernet. There is more than one interface on the control workstation and each connects to a subset of the SP nodes.
- Multiple-subnet, multiple-stage SP Ethernet. A set of nodes, acting as routers to the remaining nodes on separate subnets, connects directly to the control workstation.

See “System Topology Considerations” on page 65 for sample configurations illustrating these connection methods.

The SP boot/install servers must be on the same subnet as their clients. In the case of a multiple-stage, multiple-subnet SP Ethernet, the control workstation is the boot/install server for the first node in each frame and those nodes are the boot/install servers for the other nodes in the frames.

Also, when booting from the network, nodes broadcast their host request over their en0 interface. Therefore, en0 of the node must be the Ethernet that is connected to the boot/install network.

Additional LANs

The SP Ethernet can provide a means to connect all nodes and the control workstation to your site networks. However, it is likely that you will want to connect your SP nodes to site networks through other network interfaces. If the SP Ethernet is used for other networking purposes, the amount of external traffic must be limited. If too much traffic is generated on the SP Ethernet, the administration of the SP nodes may be severely impacted. For example, problems may occur with network installs, diagnostic function, and maintenance mode access. As an extreme case, if too much external traffic occurs, the nodes will hand when broadcasting for the network.

Ethernet, Fiber Distributed Data Interface (FDDI), and token-ring are also configured by the SP. Other network adapters must be configured manually. These connections can provide increased network performance in user file serving and other network related functions. You need to assign all the addresses and names associated with these additional networks.

IP over the Switch

If your SP has a switch and you want to use IP for communications over the switch, each node needs to have an IP address and name assigned for its switch interface, the **css0** adapter. The **css0** adapter applies to both the High Performance Switch and the SP Switch. If hosts outside the SP switch network need to communicate over the switch using IP with nodes in the SP, those hosts must have a route to the switch network through one of the SP nodes.

If you are not enabling ARP on the switch, specify the switch network subnet mask and the starting node's IP address. After the first address is selected, subsequent node addresses are based on the switch port number. See “Understanding Node Numbering and Switch Node Numbering” on page 80. Unlike all other network

interfaces, which can have sets of nodes divided into several different subnets, the switch IP network must be one contiguous subnet which includes all the nodes in the system.

If you want to assign your switch IP addresses as you do your other adapters, you must enable ARP for the **css0** adapter. If you enable ARP for the **css0** adapter, you may use whatever IP addresses you wish, and those IP addresses do not have to be in the same subnet for the whole system. They must all be resolvable by the host command on the control workstation.

Subnetting Considerations

All but the simplest SP system configurations will likely include several subnets. Thoughtful use of netmasks in planning your networks can economize on the use of network addresses. Refer to *AIX Version 4 System Management Guide: Communications and Networks,* for information about Internet addresses and subnets.

As an example, consider an SP Ethernet, where none of the six subnets making up the SP Ethernet have more than 16 nodes on them. A netmask of 255.255.255.224 provides 30 discrete addresses per subnet, which is the smallest range that is usable in the wiring as shown. Using 255.255.255.224 as a netmask, we can then allocate the address ranges as follows:

- 129.34.130.1-31 to the control workstation to node 1 subnet
- 129.34.130.33-63 to the frame 1 subnet
- 129.34.130.65-96 to frame 2

In the same example, if we used 255.255.255.0 as our netmask, then we would have to use six separate Class C network addresses to satisfy the same wiring configuration (that is, 129.34.130.x, 129.34.131.x, 129.34.132.x, and so on).

Planning Considerations for Network Router Nodes

If you are ordering an Ascend GRF switched IP router and the SP Switch Router Adapter, for routing purposes in your environment, the next few paragraphs on using standard nodes as a network router may not be applicable to your SP configuration. However, if you are not ordering the Ascend GRF option, then this section describes some considerations for using your nodes as network routers.

When planning router nodes on your system, several factors can help determine the number of routers needed and their placement in the SP configuration. The number of routers you need may vary depending on your network type. (In some environments, router nodes may also be called gateway nodes.)

For nodes that use Ethernet or token ring as the routed network, a customer network running at full bandwidth results in a lightly loaded CPU on the router node. For nodes that use FDDI as the customer routed network, a customer network running at or near maximum bandwidth results in high CPU utilization on the router node. For this reason, you should not assign any additional role in the computing environment, such as a node in a parallel job, to a router using FDDI as the customer network. You also should not connect more than one FDDI to a router node.

Applications, such as POE and the Resource Manager, should run on nodes other than FDDI routers. However, Ethernet and token ring gateways can run with these applications.

For systems that use Ethernet or token-ring routers, traffic can be routed through the SP Ethernet but careful monitoring of the SP Ethernet will be needed to prevent traffic coming through the router from impacting other users of the SP Ethernet. For FDDI networks, traffic should be routed across the switch to the destination nodes. The amount of traffic coming in through the FDDI network can be up to 10 times the bandwidth the SP Ethernet can handle.

Information about configuring network adapters, and tuning the various network tunables on the nodes is in *Administration Guide*

Planning Considerations for the Ascend GRF

The switched IP router gives you high speed access to other systems. Without the Ascend GRF, you would need to dedicate a standard node to performing external network router functions. Also, because the switched IP router is external to the frame, it may not take up valuable processor space.

The Ascend GRF has two optional sizes. The smaller unit has four internal slots and the larger unit has sixteen. one slot must be occupied by a SP Switch Router Adapter card which provides the SP connection. The other slots can be filled with any combination of network connection cards including:

- HIPPI
- FDDI
- HSSI
- 10 or 100 BaseT
- ATM
- Ethernet

Also, additional SP Switch Router Adapters are needed for communicating between system partitions and other SP systems. These cards provide switching rates of up to four to sixteen gigabits per second between the router and the external network.

To attach an extension node to an SP switch, configuration information must be specified on the control workstation. Communication of switch configuration information between the control workstation and the Ascend GRF takes place over the SP system's administrative Ethernet and requires use of the UDP port number 162 on the control workstation. If this port is in use, a new communication port will have to be configured into both the control workstation and the SNMP agent supporting the extension node.

The Ascend GRF requires PSSP 2.3 on the primary node and the primary backup node. Using the SP Switch Router Adapter, the switched IP router can be connected to either a SP Switch or the SP Switch-8. The switched IP router cannot be connected to the High Performance series of switches.

Ascend GRF Network Connections

The SP Switch Router Adapter in the Ascend GRF may be attached to an SP switch to improve throughput of data coming into and going out of the RS/6000 SP system. Each SP Switch Router Adapter in the Ascend GRF will require a valid unused switch port in the SP system. A valid unused switch port is a switch port which meets the rules for configuring frames and switches.

There are two basic sets of rules for choosing a valid switch port:

1. Rules for selecting a valid switch port associated with an empty node slot.
2. Rules for selecting a valid switch port associated with an unused node slot created by a wide or high node position which is either the second half of a wide node or one of the last three positions of a high node.

Examples of using an empty node slot position:: One example of using an empty node slot position is a single frame system with fourteen thin nodes located in slots 1 through 14. This system has two unused node slots in position 15 and 16. These two empty node slots have corresponding switch ports which provide valid connections for the SP Switch Router Adapter.

Another example is a logical pair, two frame system with one shared switch. The first frame is fully populated with eight wide nodes. The second frame has three wide nodes in slots 1, 3, and 5 (see later sections in this chapter for explanations of node numbering schemes). The only valid switch ports in this configuration would be those switch ports associated with node slots 7, 9,11, 13, and 15 in the second frame.

In a logical system with four frames holding fourteen high nodes sharing one switch , there will only be two empty node positions (see the Frames section of Chapter 1 for clarification). In this example, the first three frames are fully populated with four high nodes in each frame. The last frame has two high nodes and two empty high node slots. This means the system has two valid switch ports associated with node slot numbers 9 and 13.

Examples of using node slot positions within a wide node or high node:: The first example is a single frame fully populated with eight wide nodes. These wide nodes occupy the odd numbered node slots. Therefore, all of the even number slots are said to be unoccupied and would have valid switch ports associated with them. These ports may be used for an SP Switch Router Adapter.

Note: In this example, attaching an SP Switch Router Adapter to an even number node slot will prevent you from using the frame as a logical expansion frame. Any future system expansion in this instance will require an SP switch.

A second example is a single frame system with twelve thin nodes in slots 1 through 12 and a high node in slot 13. A high node occupies four slots but only uses one switch port. Therefore, the only valid switch ports in this configuration are created by the three unused node slots occupied by the high node. In other words, the switch ports are associated with node slots 14, 15, and 16.

Note: The frame in this example is a mixed frame. Therefore theSP Switch Router Adapter may be attached to any valid switch port without penalty to future

expansion since a mixed frame cannot be used as a logical expansion frame.

These rules are discussed in more detail later in this chapter.

Understanding Node Numbering and Switch Node Numbering

Use the information in this section for assigning IP addresses to the nodes and the node SP switch interface.

Slot Numbers

Each 79" SP frame contains eight drawers which have two slots each for a total of 16 slots. The 49" SP frame has only four drawers and eight slots. When viewing a full-sized SP frame from the front, the 16 slots are numbered sequentially from bottom to top, left then right.

The position of a node in an SP is sensed by the hardware, and that position is the slot to which it is wired. That slot is the *slot number* of the node.

- A thin node occupies a single slot in a drawer and its slot number is the corresponding slot. (See thin nodes in Figure 10.)
- A wide node occupies two slots and its slot number is the odd-numbered slot. (See the wide nodes in Figure 10.)
- A high node occupies four consecutive slots in a frame. Its slot number is the first (lowest number) of these slots.

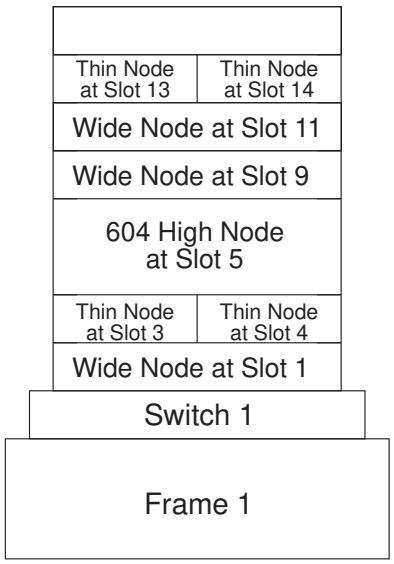

Figure 10. Node-slot assignment

Node Placement

A frame full of thin nodes is called a *thin-node frame*. Similarly, you may have a *wide-node frame* or a *high-node frame*. In addition, a frame that contains nodes of different types is called a *mixed-node frame*.

In what follows, keep in mind that, so long as it physically fits, a wide node may always be placed where two thin nodes might be, and a high node may always be placed where two wide nodes, or four thin nodes, might be.

Currently, the SP supports four frame configurations. Each configuration corresponds to a frame and its possible companion *expansion frames*. An expansion frame is a successor frame which shares the subject frame's switch. The capability for sharing a switch is affected by the number of nodes in the frame having the switch. There are restrictions on what constitutes a "supported" frame configuration. Figure 11 on page 82 illustrates the supported configurations for switch ports.

In configuration 0, the model frame has a switch which uses all 16 of its switch ports. Since all switch ports are used, the frame supports zero expansion frames. Similarly, if a frame does not have a dependable pattern of unused slots, then it cannot share its switch and it also has zero expansion frames. For example, any frame containing a thin node "threatens" to eventually use all of its node slots. Therefore, no switch ports are available and the frame is not a candidate for expansion. For related reasons, thin nodes are not allowed in an expansion frame.

An example of a dependable pattern of unused switch ports is where the model frame has only wide nodes. It could use at most eight switch ports, and so has eight to share with other frames. Those other frames are allowed to be configured as in configuration one or two in Figure 11 on page 82. Configuration one has a single expansion frame using wide nodes while configuration two has two expansion frames.

In configuration 2, only high nodes are used in the two expansion frames. However, wide nodes can be substituted for high nodes **if and only if** the wide node is placed in the same address point that the high node would go into. In other words, only four wide nodes could be placed in either expansion frame in configuration two.

Another example of a dependable pattern of unused slots is where the switched frame is a *high-node frame*: every node is a high node, and they occupy switch ports 0, 4, 8, or 12 as shown in configuration 3 of Figure 11 on page 82. Such a frame uses only four switch ports, and, therefore, its switch can support 12 additional nodes. A restriction here is that each expansion frame is also considered a *high-node frame*. Therefore, there can be up to three expansion frames. Each of these expansion frame can house a maximum of four wide or high nodes. Once again, if wide nodes are used, they **must** be placed in the high node address points.

Mixed-node frames containing thin nodes **cannot** share a switch. Each frame must have its own switch for frame to frame data transfers. A typical system configuration for this instance is shown in Figure 12 on page 83.

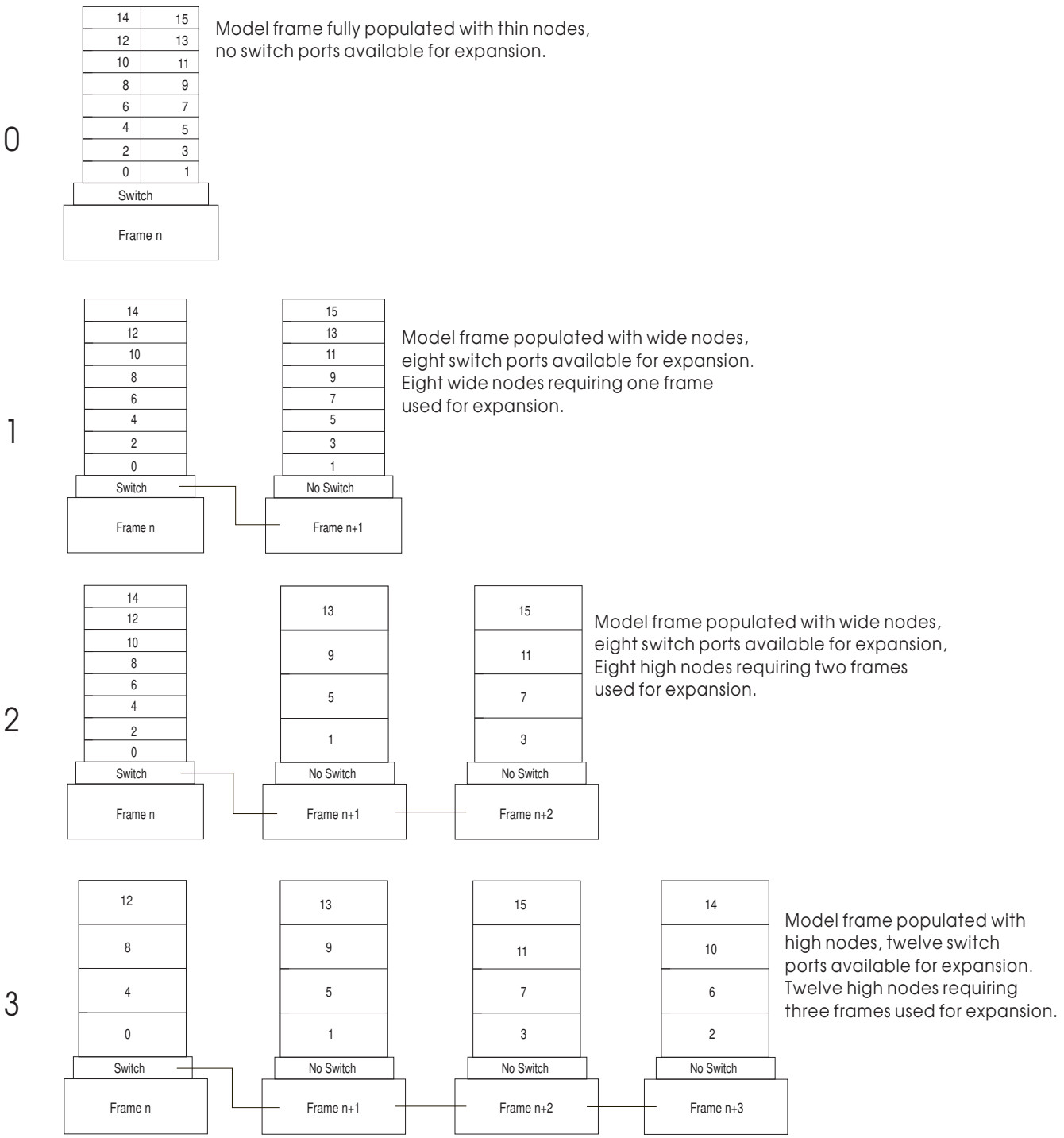

Figure 11. Supported frame configurations showing switch port assignments

Frame Numbers and Switch Numbers

The administrator establishes the frame numbers when the system in installed. Each frame is referenced by the tty port to which the frame supervisor is attached and is assigned a numeric identifier. The order in which the ttys are identified defines the sequence in which frames will be examined during the configuration process. This order is used to assign global identifiers to the switch ports and nodes. This is also the order used to determine which frames share a switch.

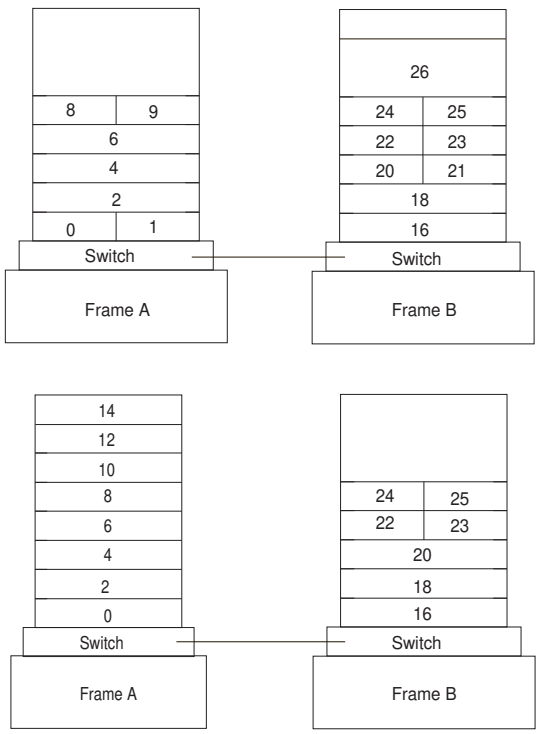

Node numbering and switch to switch frame connections when thin nodes are in use.

Figure 12. Node numbering and switch to switch frame connections when thin nodes are in use

Nodes in frames that do not contain any switch boards will be attached to the switch board in the first preceding frame with a switch board. The frames without switch boards are called *expansion frames*. A maximum of three expansion frames are supported per switch.

Expansion frames must be consecutive to the base frame number that contains a switch. For example, if frame *n* has three expansion frames, the expansion frames must be numbered *n+1*, *n+2*, and *n+3*. You can skip frame numbers as long as the next frame is not an expansion frame. A reason that the frame numbers might be skipped is to allow for the addition of expansion frames at a later time. If the frame numbers of existing frames had to be changed in order to add the expansion frame, then part or all of the system would have to be reconfigured.

It is possible to have an SP System configuration that contains more frames than switches. Each frame in the configuration should be assigned a frame number starting with 1 and progressing consecutively to the last frame (except in the case of expansion frames). If the frame contains a switch, the switch is assigned a number beginning with 1 and progressing consecutively to the last switch on the last frame. (See Figure 13 on page 84.) Within switch-only frames, called switch-expansion frames, each switch should be numbered consecutively, bottom to top, beginning with 1001.

The Switch Expansion Frame should be the last frame in the system. Frame numbers do not have to be contiguous. You should assign a frame number to the switch expansion frame that allows for the future addition of node frames.

When installing a wide or high node type model frame without a logical expansion frame, reserve the next frame number for future expansion. Frame numbering for logical expansion frames must be consecutive and the addition of a logical expansion frame at a later time will require you to reconfigure the other frames in your system if the frame number following the wide or high node type model frame is unavailable. Similar comments apply to other expandable frames.

Node Numbering for 79" Frames With a Switch

A *node number* is a global id assigned to a node. It is the primary means by which an administrator can reference a specific node in the system. Node numbers are assigned by the following formula:

node_number = ((*frame_number* - 1) x 16) + *slot_number*

where *slot_number* is the lowest slot number occupied by the node. Each type (size) of node occupies a consecutive sequence of slots. For each node, there is an integer n such that a thin node occupies slot *n*, a wide node occupies slots *n, n+1* and a high node occupies *n, n+1, n+2, n+3*. For wide and high nodes, n must be odd.

Node numbers are assigned independent of whether the frame is fully populated. (See Figure 13.)

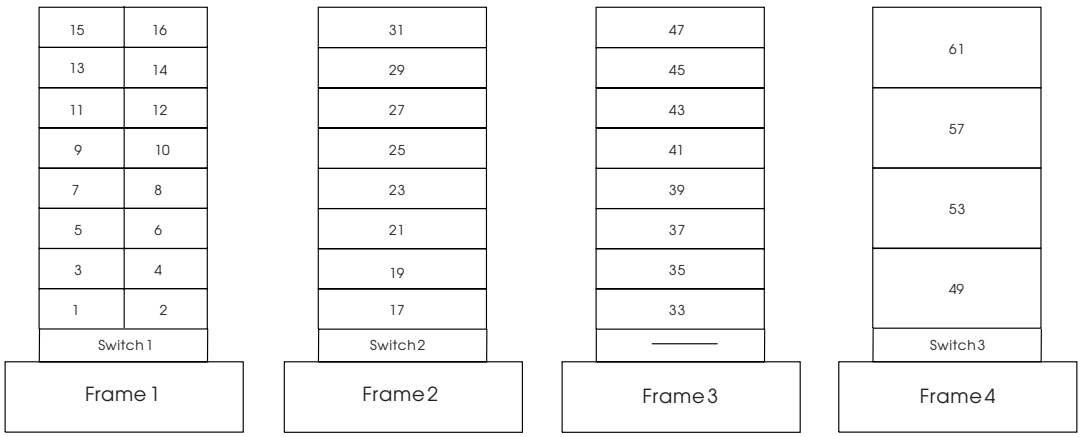

Figure 13. Node Numbering for an SP System

Switch Port Numbering

In a switched system, the switch boards are attached to each other to form a larger communication fabric. Each switch provides some number of ports to which a node may connect. (16 ports for a full size switch, and 8 ports for each of the SP Switch-8 and LC-8 switches.) In larger systems, additional switch boards (intermediate switch boards) must be introduced to provide for switch board connectivity; such boards provide no node switch ports.

These node *switch ports* are numbered sequentially across the switch boards, starting with 0 on board 1. If a node is connected to switch port number *p* in this sequence, then the node *uses switch port number p*, or the node *is switch node number p*.

Switch port numbers are used internally in PSSP software as a direct index into the switch topology and to determine routes between switch nodes.

For the 16 port SP and High Performance switches, you can evaluate the following formulas to determine the switch port number to which a node is attached:

If the node is:	Formula.
Connected to a switch within its frame	switch_port_number = (switch_number - 1) X 16 + (slot_number - 1)
Connected to a switch outside of its frame (Expansion Frame)	switch_port_number = (switch_number - 1) X 16 + port_number

Here, *switch_number* is the number of the switch board to which the node is connected and *port_number* is the port position on the switch board to which the node is connected.

For more information on switch port numbers, see Chapter 5, particularly Example 3.

SP Switch-8 and High Performance Switch LC-8, Port Numbering

The SP Switch-8 is compatible with high nodes, however, the High Performance Switch LC-8 is not compatible with high nodes.

Node numbers for 49" frames are assigned by the same algorithm used in to assign node numbers in the 79" frames. This formula is:

node_number = ((*frame_number* - 1) x 16) + *slot_number*

where *slot_number* is the lowest slot number occupied by the node. Each type (size) of node occupies a consecutive sequence of slots. For each node, there is an integer n such that a thin node occupies slot *n*, a wide node occupies slots *n, n+1* and a high node occupies *n, n+1, n+2, n+3*. For wide and high nodes, n must be odd.

Note: Extension nodes must be placed into a valid switch port location as verified in the SDR Syspar_map.

For the SP Switch-8, and the High Performance Switch LC-8 a different algorithm is used for assigning nodes their node numbers and switch port numbers. A system with this kind of switch contains only switch port numbers 0 through 7.

The following algorithm is used to assign nodes their switch port numbers for systems with eight port switches:

1. Assign the node in slot 1 to **switch_port_number = 0**. Increment **switch_port_number** by 1.
2. Check the next slot. If there is a node in the slot, assign it the current **switch_port_number**, then increment the number by 1.

   Repeat until you reach the last slot in the frame or switch port number 7, whichever comes first.

Figure 14 on page 86 and Table 29 on page 86 contain sample switch port numbers for a system with a 49" frame and an eight port switch.

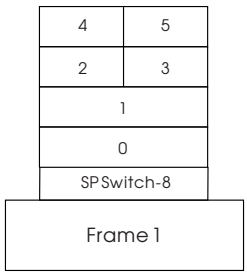

Figure 14. Switch Port Numbering for an HPS LC-8, and 49" Frame (Model 3AX)

Table 29. Sample Switch Port Numbers for the HP Switch–8

Slot Number	Populated?	Node-Number	Switch-Port Number
1	Yes	1	0
2	No		
3	Yes	2	1
4	No		
5	Yes	3	2
6	Yes	4	3
7	Yes	5	4
8	Yes	6	5
9 - 16*	No		

* Slot numbers 9-16 are used only for 79" models (3BX).

IP Assignment

Switch port numbering is used to determine the IP address of the nodes on the switch. If your system is *not* ARP-enabled on the **css0** adapter, choose the IP address of the first node on the first frame. The switch port number is used as an offset added to that address to calculate all other switch IP addresses.

Figure 15 on page 87 illustrates the switch port numbers for an SP system. It also illustrates how the switch port numbers are set for an expansion frame. In Figure 15 on page 87, Switch 2 connects to the nodes in Frame 3. Specifically, the nodes of Frame 3 use the respective ports of Switch 2 not used by Frame 2. Based on the formula for a frame that does not have a switch, Frame 3's first slot has a switch port number of **17**:

switch_port_number = (*switch_number* - 1) X 16 + *port_number*
switch_port_number = (2 - 1) X 16 + 1
switch_port_number = 17

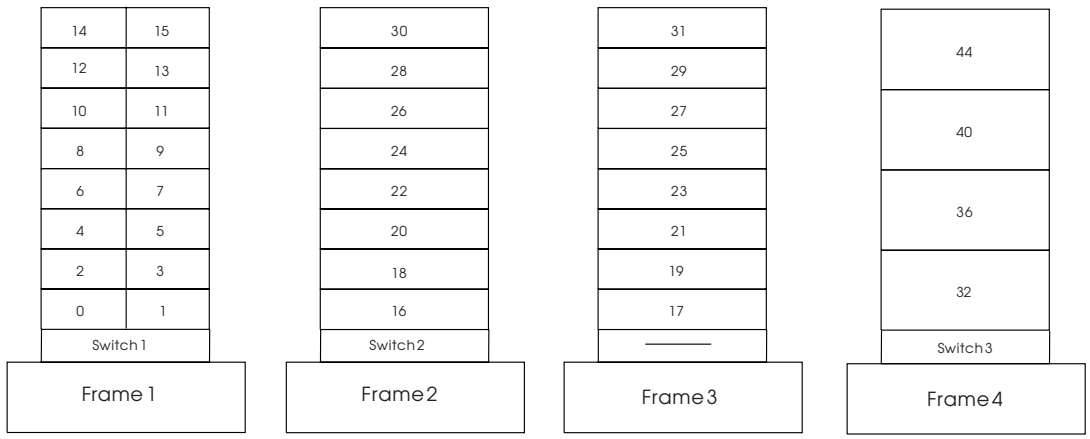

Figure 15. Switch Node Numbering Sequence

If ARP is enabled for the **css0** adapter, then the IP addresses may be assigned like any other adapter. That is, they may be assigned beginning and ending at any node, and they do not have to be contiguous addresses for all the **css0** adapters in the system.

Chapter 4. Planning for a High Availability Control Workstation

Note: For specific information on planning your control workstation, refer to "Question 10: What Do You Need for Your Control Workstation?" on page 49.

Planning for a High Availability Control Workstation requires planning for both hardware and software. For hardware planning information read *IBM RS/6000 SP Systems: Planning Vol. 1* That book describes the hardware components and cabling you need to install the High Availability Control Workstation successfully. For information on software requirements, refer to "Software Requirements for HACWS Control Workstation Configurations" on page 95.

The design of the SP High Availability Control Workstation is modeled on the AIX High Availability Cluster Multi-Processing/6000 Licensed Program (HACMP). HACWS utilizes HACMP running on two RS/6000 control workstations in a two-node rotating configuration. HACWS utilizes an external DASD that is accessed non-concurrently between the two control workstations for storage of SP related data. There is also a dual RS-232 frame supervisor card with a connection from each control workstation to each SP frame in your configuration. This HACWS configuration provides automated detection, notification, and recovery of control workstation failures.

Overall System View of a High Availability Control Workstation

The SP system looks similar except that there are two control workstations connected to the SP Ethernet and TTY network. The frame supervisor TTY network is modified to add a standby link. The second control workstation is the backup. Figure 16 on page 90 shows a logical view of a High Availability Control Workstation. The figure shows disk mirroring, an important part of high availability planning.

© Copyright IBM Corp. 1997

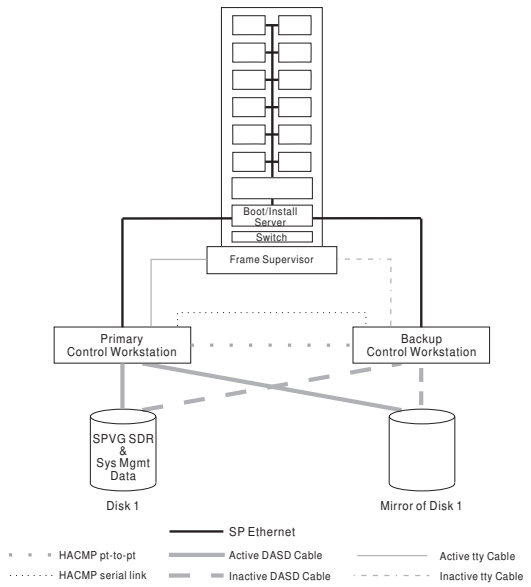

Figure 16. High Availability Control Workstation With Disk Mirroring

If the primary control workstation fails, there is a disruptive failover that switches the external disk storage, performs IP and hardware address takeover, restarts the control workstation applications, remounts file systems, resumes hardware monitoring, and lets clients reconnect to obtain services or to update control workstation data. This means that there is only one active control workstation at any time.

The primary and backup control workstations are also connected on a private point-to-point network and a serial TTY link or target mode SCSI. The backup control workstation assumes the IP address, IP aliases, and hardware address of the primary control workstation. This lets client applications run without changes. The client application, however, must initiate reconnects when a network connection fails.

The SP data is stored in a separate volume group on the external disk storage.

The backup control workstation can run other unrelated applications if desired. However, if the application on the backup control workstation takes significant resource, that application may have to be stopped during failover and reintegration periods.

Benefits of a High Availability Control Workstation

High Availability Control Workstation is a major component of the effort to reduce the possibility of single point of failure opportunities in the SP. There are already redundant power supplies and replaceable nodes. However, there are also many elements of hardware and software that could fail on a control workstation. With a High Availability Control Workstation, your SP system will have the added security of a backup control workstation. Also, High Availability Control Workstation allows your control workstation to be powered down for maintenance or updating without affecting the entire SP system.

Difference Between Fault Tolerance and High Availability

Before planning whether to use High Availability Control Workstation, read the following section to understand the difference between high availability from fault tolerance.

Fault Tolerance

The *fault tolerant* or *continuous availability* model relies on specialized hardware to detect a hardware fault and instantaneously switch to a redundant hardware component—whether the failed component is a processor, memory board, power supply, I/O subsystem, or storage subsystem.

Although this cutover is apparently seamless and offers non-stop service, a high premium is paid in both hardware cost and performance because the redundant components do no processing.

More importantly, the fault tolerant model does not address software failures, by far the most common reason for down time.

High Availability

The *high availability* or *fault resiliency* model views availability not as a series of replicated physical components, but rather as a set of system-wide, shared resources that cooperate to provide essential services.

High availability combines software with industry-standard hardware to minimize down time by quickly restoring services when a system, component, or application fails. While not instantaneous, restoring services is rapid, often less than a minute.

The distinguishing factor between fault tolerance and high availability is that a fault tolerant environment offers no service interruption, versus a minimal service interruption in a highly available environment. Many sites are willing to absorb a small amount of down time with high availability rather than pay the much higher cost of providing fault tolerance. Moreover, in most highly available configurations, the backup processors are available for use during normal operation.

IBM's Approach to High Availability for Control Workstations

For the reasons mentioned previously, IBM has taken the high availability approach to control workstation support for the SP system. The control workstation is a suitable candidate for high availability because it can typically withstand a short interruption, but must be restored quickly. In the SP configuration, the control workstation has been a possible single point of failure.

Eliminating the Control Workstation as a Single Point of Failure

A *single point of failure* exists when a critical function is provided by a single component. If that component fails, the system has no other way to provide that function and essential services become unavailable.

The key facet of a highly available system is its ability to detect and respond to changes that could impair essential services. The SP software with High Availability Control Workstation lets a system continue to provide services critical to an installation even though a key system component—the control workstation—is no

longer available. When the control workstation becomes unavailable, either through planned event or inadvertent event, the SP high availability component is able to detect the loss and shift that component's workload to a backup control workstation.

Refer to the following tables for some of the consequences of failure of a control workstation that has not been backed up.

Table 30. Effect of Failure of Non-High Availability Control Workstation on Mandatory Software

Major Software Component	**Effect on SP System**
Hardware Monitor	1. No control of SP hardware except for the on/off switch on a node, and the use of the service laptop connected to a frame supervisor cable. 2. Nodes cannot be hot-plugged in or out of the frames controlled by the failed control workstation.
SDR	1. Current running jobs continue to completion. 2. No new parallel jobs can start. 3. The Resource Manager daemons die because they cannot make contact with the SDR. 4. Serial jobs can continue to be started. 5. No hardware or software configuration changes can occur. 6. No installations can be started. 7. A switch fault will not complete processing, and the switch will remain in service mode if a fault occurs while the control workstation is unavailable. 8. No cluster shutdowns can occur. 9. A node can still be powered off and on manually, but this causes a switch fault.
Kerberos Authentication Server (if no backup server exists)	1. Users cannot obtain new tickets via kinit. 2. Background processes using rcmdtgt to get ticket will fail. 3. Users cannot change passwords. 4. New users cannot be added to the authentication database.
Diagnostics	Diagnostics cannot be run on node boot disks.
File Collections Master	No new distributed file updates can occur.
Availability subsystems (hats, hags, haem)	These subsystems will not restart upon node reboot.

Table 31 (Page 1 of 2). Effect of control workstation Failure on User Data on the Control Workstation

Major Software Component	**Effect on SP System**
User Management	You cannot make changes to a user data base stored on the control workstation.
Hardware Logging Daemon	1. Hardware logging immediately stops. 2. Nodes cannot be hot plugged.
Error Logging Alerts	If sent by **mail** will be put in the node mail spool.
Accounting Master	1. No consolidated accounting records are kept during down time. 2. Records are consolidated after the control workstation comes up.

Table 31 (Page 2 of 2). Effect of control workstation Failure on User Data on the Control Workstation	
Major Software Component	**Effect on SP System**
User File Server	1. Running jobs may fail. 2. Jobs may not be able to access needed data.
Parallel Environment home node	Running parallel jobs will fail immediately.

Consequences of a High Availability Control Workstation Failure

When a failure occurs in a High Availability Control Workstation, the following steps take place automatically:

- The external disk storage is switched to the backup control workstation.
- The hardware and IP addresses are switched to the backup control workstation.
- The control workstation applications are restarted.
- The file systems are remounted.
- Hardware monitoring is resumed.
- Clients are allowed to reconnect to obtain data or to update control workstation data.

System Stability With High Availability Control Workstation

When a control workstation fails, it causes significant loss of function in configuration, systems management, hardware monitoring, and the ability to handle a switch fault. The reliability of the whole system is compromised by the chance of a switch fault during a control workstation outage. Using the High Availability Control Workstation increases the mean time before failure (MTBF) of the entire system.

The failover is disruptive. Applications at the control workstation that are interrupted will not resume automatically and must be restarted. The interruption is momentary. Applications within nodes, that require no communication with the control workstation may not notice the failover. Applications relying on data from the SDR will be momentarily interrupted. In an environment where the resource manager allocates resources, an outage of hardware or software on the control workstation causes the entire system to stop running after a few minutes. The resource manager and its backup fail when they lose connection to the SDR. New parallel jobs cannot be started and existing parallel jobs cannot be controlled; they must either run to completion or be manually killed. Having a backup control workstation available prevents this problem.

Occasionally, you may need to take a control workstation down to maintain the hardware or software or to repair or update a component of the system. Using High Availability Control Workstation lets you schedule this upkeep without taking the entire system down. The serviceability of the SP is increased by the service time for the control workstation, which increases the mean time to repair (MTTR) of the system as a whole.

Related Reliability Options for Control Workstations

Some configuration options that can make your control workstation more available are not part of the High Availability Control Workstation product. They include disk mirroring, uninterruptible power supplies, and dual disk controllers both internal and external.

Uninterruptable Power Supply (UPS)

A UPS can supply electricity to a device to keep it running when main power is interrupted or is unreliable. Usually a UPS is not the sole source of power. Rather, it is typically used to smooth a fluctuating source or to provide enough power to enable a device to shut down gracefully. You can use a UPS in conjunction with all other means of assuring control workstation reliability. See *IBM RS/6000 System Overview and Planning* for the power consumption requirements of your control workstation.

Power Independence

Each control workstation should be attached to a different electrical power source or breaker panel if possible. At the least they should be on separate circuits so that maintenance or failures in main power will affect only one control workstation.

Single Control Workstation with Disk Mirroring

The process of mirroring occurs when each block of data written to one disk is also written to another disk. You always have a copy of your data in case one disk or disk adapter fails. As a middle ground to availability you can decide to have a single control workstation and mirror the root volume group to provide better availability of the control workstation. This requires twice the number of disks in the root volume group. See “Mirroring rootvg for Maximum Operating System Availability” in *AIX System Management Guide: Operating System and Devices* That book describes how to create and manage mirrored rootvg volume groups.

Spare Ethernet Adapters

You can cable spare SP Ethernet adapters into the existing Ethernet LAN segments for the SP and leave them in a defined but unavailable configuration state. When an Ethernet adapter fails, you can unconfigure the failing adapter and configure the spare Ethernet adapter for that LAN segment. You can use the spare adapter until the failed one is repaired or replaced. Note that the spare Ethernet adapter still counts as one of the stations in the 30 total stations you may have on an Ethernet LAN segment.

Completing Planning Worksheets for High Availability Control Workstation

You'll need to complete the following worksheets in the AIX High Availability Cluster Multi-Processing/6000 documentation:

- Shared Volume Group/File System Worksheet (Non-Concurrent)
- Defining Shared LVM Components for Non-Concurrent Access

As you complete the AIX High Availability Cluster Multi-Processing/6000 planning and installation steps, take the Non-Concurrent option whenever you are given the choice.

Limits and Restrictions

The High Availability Control Workstation has the following limitations and restrictions:

- You cannot split the load across a primary and backup control workstation. Either the primary or the backup provides all the function at one time.
- The primary and backup control workstations must each be a RS/6000. You cannot use a node at your SP as a backup control workstation.
- The backup control workstation cannot be used as the control workstation for another SP system.
- The backup control workstation cannot be a shared backup of two primary control workstations.

  There is a one-to-one relationship of primary to backup control workstations; a single primary and backup control workstation combination can be used to control only one SP system.
- The Resource Manager is *not* restarted when control is transferred to a backup control workstation. The operator must decide whether to kill the currently running parallel jobs (suspend will not work) and restart the Resource Manager, or to wait until all the running jobs complete and then restart the Resource Manager. New parallel jobs cannot start until the resource manager is restarted.
- If your primary control workstation is a PSSP authentication server, the backup control workstation must be a secondary authentication server.

Frame Supervisor Changes

Check with your IBM representative for information about ordering the necessary hardware.

Software Requirements for HACWS Control Workstation Configurations

The software requirements for the control workstation include:

- Two licenses for AIX server
- Two licenses for C or C++ for AIX.

  If the C for AIX license server is on the control workstation the backup control workstation should also have a license server with at least one license. If there is no license server on the backup control workstation, an outage on the primary control workstation will not allow the SP system access to a C for AIX license.
- Two licenses and software sets for 5765–A86 HACMP/6000 High Availability Clustered Multiprocessing.

  This is the High availability feature of HACMP (F/C 3081). Both the client and server option of feature #3081 must be installed on both control workstations. You must purchase two licenses.
- 5765-529 PSSP 2.3 Priced feature #3936 HACWS

This is the customization software that is required for HACMP support of the control workstation. This is one license per SP system. A copy is installed on both control workstations.

Required High Availability Control Workstation Components

Once you decide that the High Availability Control Workstation is right for your installation, you must order the following components:

- An AIX server license for each control workstation.

  AIX 4.2.1 or greater is required. Also, the AIX version you are using must be supported on PSSP 2.3. Refer to the "Memo to Users" to determine what levels of AIX are supported with PSSP 2.3.

- The High Availability Control Workstation feature with its cables, hardware, and software. If you are installing a new SP, the High Availability Control Workstation software may be on the installation media, but you require the license to use it.

- Two licenses for HACMP/6000; 5050 High Availability feature. (You do not need the 5051 feature.)

  HACMP 4.2 or greater is required. Also, the HACMP version you are using must be supported on the level of AIX that you are using. Refer to the appropriate HACMP documentation to determine what levels of HACMP are supported with the level of AIX that you are using or considering.

Planning and using the backup control workstation will be simpler if you configure your backup control workstation identical to the primary control workstation. Some components must be identical, others can be similar. For example, the TTY assignments on each must be identical and should be configured in the same slots on each. If you have the same number and type of disks on each, your planning and operation will be simpler. Otherwise you might have to plan recovery scripts that address HD0 on one control workstation and HD3 on the other.

Planning Your High Availability Control Workstation Network Configuration

Planning your HACWS network configuration is a complex task which requires understanding the basic HACMP concepts. These concepts are explained in the HACMP publications. This section demonstrates how to plan your HACWS network configuration through a hypothetical situation. Additional HACWS specific network requirements are also described in this section.

Assume that your system has a single control workstation named *dutchess.xyz.com* and it will serve as the primary control workstation after you install HACWS. The workstation you add will become the backup control workstation. The name of the backup control workstation is *ulster.xyz.com*.

The SP nodes get control workstation services by accessing the network interface whose name matches the hostname of the primary control workstation. In this example, the SP nodes get control workstation services by accessing *dutchess.xyz.com*. If the primary control workstation fails and the backup control workstation takes over, the backup control workstation assumes the network identity of *dutchess.xyz.com*.

The *dutchess.xyz.com* network interface gets configured on the control workstation currently providing the control workstation services. HACMP refers to *dutchess.xyz.com* as a **service address** (or service interface). The primary control workstation must use a different network address when it reboots in order to avoid a network address conflict between the two control workstations. HACMP refers to this alternate network address as a **boot address** (or boot interface). In this example, the boot address of the primary control workstation is *dutchess_bt.xyz.com*.

In addition, HACWS requires the backup control workstation must always be reachable via a network interface whose name matches its hostname. In this example, this name is *ulster.xyz.com*. This network interface does not get identified to HACMP. If you have no available adapter upon which to configure the *ulster.xyz.com* network interface, you can use an IP address alias.

Each control workstation in this example configuration contains one ethernet adapter, connected to the SP Ethernet network. After the two control workstations are booted and before HACMP is started, their network configuration looks like the one illustrated in Figure 17 on page 98.

At this point, neither machine is providing control workstation services, so the *dutchess.xyz.com* network interface is not available. The ethernet adapter on the primary is configured with its boot address *dutchess_bt.xyz.com* and the ethernet adapter on the backup is configured with its boot address *ulster_bt.xyz.com*. Since there is only one network adapter, the network interface *ulster.xyz.com* must be configured as an IP address alias on the backup control workstation.

Note: Both IP addresses 129.40.60.22 and 129.40.60.20 are assigned to the adapter **en0** on the backup control workstation. If another network adapter is available, you do not have to use an IP address alias.

When the operator starts HACMP on both control workstations, the first control workstation to start HACMP becomes the active control workstation. (The operator selects the machine to become the active control workstation by starting HACMP on it first.) If HACMP is first started on the primary control workstation and then on the backup control workstation, the network configuration looks like the one illustrated in Figure 18 on page 99.

The only change to the network configuration is the **boot address** *dutchess_bt.xyz.com* on the primary control workstation has been replaced by the **service address** *dutchess.xyz.com*.

If the primary control workstation should fail and the backup control workstation take over, the network interface looks like the one illustrated in Figure 19 on page 99.

If the primary control workstation is still running, then its ethernet adapter is back on its boot address *dutchess_bt.xyz.com*, and the boot address *ulster_bt.xyz.com* on the backup control workstation has been replaced by the service address *dutchess.xyz.com*. The SP nodes continue to get control workstation services by accessing *dutchess.xyz.com*.

Note: The network interface *ulster.xyz.com* remains configured on the backup control workstation.

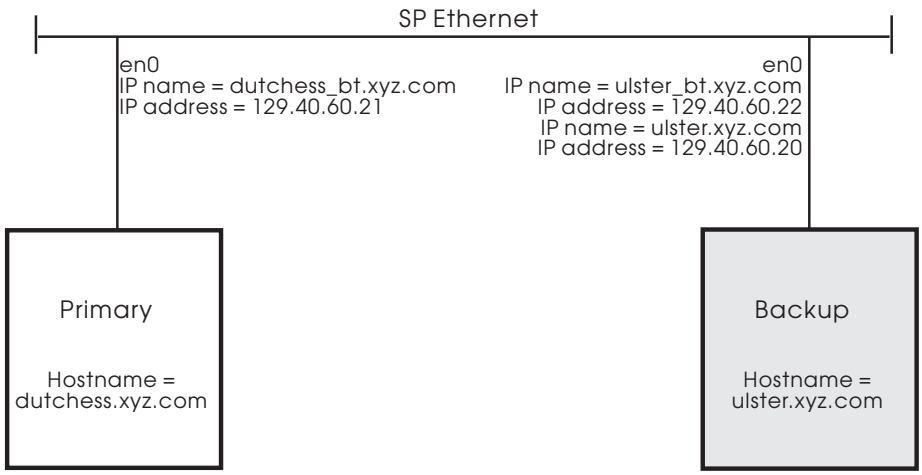

Figure 17. Initial control workstation Network Configuration

You can identify multiple network interfaces to move back and forth between the two control workstations along with the control workstation services. Some possible reasons for doing this are:

- You have an SP system with a large number of nodes and multiple ethernet adapters on the control workstation connected to the SP Ethernet network.
- You want the control workstation to provide a separate network interface for each SP system partition.
- You want a network interface on an external network to allow workstations outside of the SP system transparently access the active control workstation.

Each of these network interfaces is effectively a service address. However, the number of service addresses identified to HACMP cannot exceed the number of network adapters. Use IP address aliasing to make up the difference.

In this example, each control workstation has only one network adapter. Since *dutchess.xyz.com* is defined to HACMP as a service address, any additional "effective" service addresses must be configured using IP address aliases. If you added an SP system partition whose network interface name on the control workstation is *columbia.xyz.com* to this example configuration, it would look like Figure 20 on page 100 when the backup control workstation is active.

The HACMP service address *dutchess.xyz.com* is configured on adapter **en0** on the backup control workstation and the network interfaces *columbia.xyz.com* and *ulster.xyz.com* are configured on adapter **en0** as IP address aliases. The service address *dutchess.xyz.com* is identified to HACMP. **For each service address that is identified to HACMP, there must be boot addresses for both control workstations.** The boot address *dutchess_bt.xyz.com* is identified to HACMP for the primary control workstation, and the boot address *ulster_bt.xyz.com* is identified to HACMP for the backup control workstation

At this point, if you have not done so already, you need to do the following:

1. Determine the control workstation service addresses for your configuration.
2. Determine which service addresses should be identified to HACMP and which service addresses need to be configured using IP address aliases. **The hostname of the primary control workstation** (*dutchess.xyz.com*)**must**

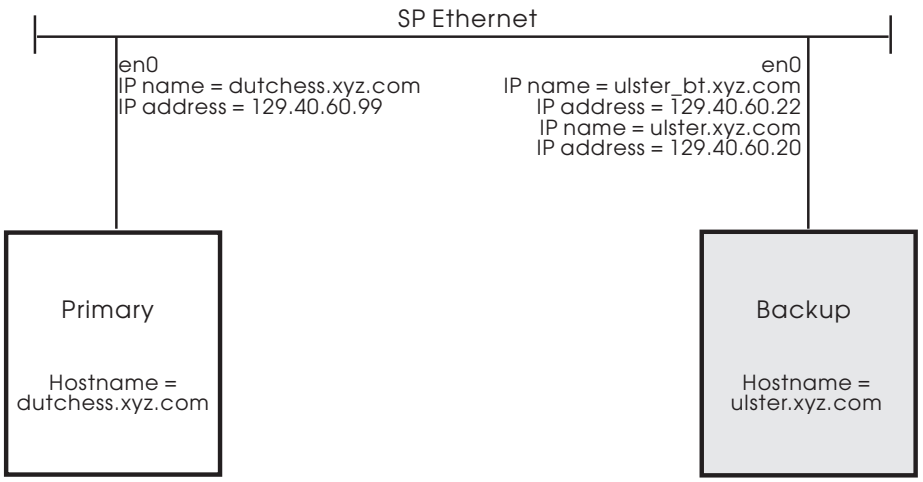

Figure 18. Starting HACMP

always be identified to HACMP as a service address. Remember the number of service addresses identified to HACMP cannot exceed the number of network adapters.

3. Determine the boot addresses for your configuration. The number of boot addresses on each control workstation will match the number of service addresses defined to HACMP. For example, if you identify three service addresses to HACMP, then you need to identify six boot addresses—three boot addresses on each control workstation.
4. Make sure the hostname of the backup control workstation (*ulster.xyz.com*) is always a valid network interface on the backup control workstation.
5. If your site uses a name server, make sure that all of these network interfaces have been added to your name server.

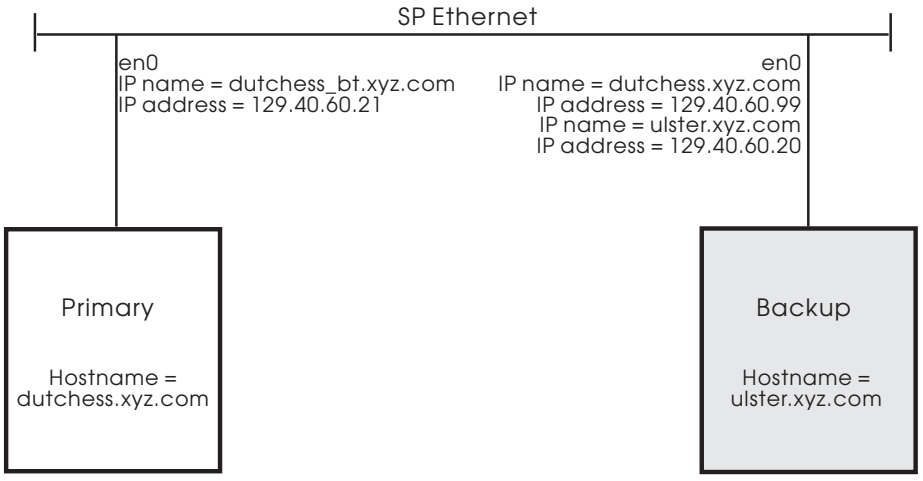

Figure 19. control workstation Failover

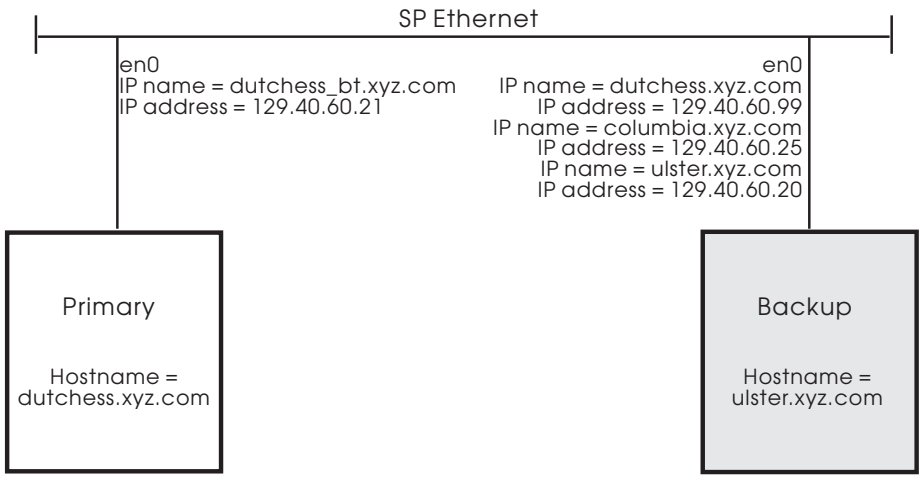

Figure 20. Adding a System Partition

Chapter 5. Planning SP System Partitions

This chapter describes how to plan for system partitioning. It describes the predefined system partitioning layouts shipped with the SP system software and introduces you to the System Partitioning Aid which allows you to create new system partitioning layouts which better suit your needs. System partitioning can apply to any system, whether it contains a switch or not, except for the HiPS-LC8 switch.

For more specific information on how to partition your system, refer to the IBM RS/6000 SP Systems: Administration Guide.

What is System Partitioning

System partitioning is the process of dividing your system into non-overlapping sets of nodes in order to make your system more efficient and more tailored to your needs.

A system partition is, at the most elementary level, a group of nodes (not including the control workstation). In essence, a system partition is an SP Subsystem which consists of sufficient pieces (nodes, control workstation, data, commands, and so on) of the SP system to form a logical SP.

With system partitions, you may ensure that switch applications running on one group of nodes are not inadvertently affected by activity on other nodes in the system.

Dependent nodes should be considered the same as standard nodes when planning a system partition.

System partitioning affects communication which occurs over the switch only; other communication paths are unaffected. System partitioning also provides environmental controls that allow the system administrator to control and monitor only the current system partition.

How Do You Partition the System?

Your SP System has a particular configuration defined by its frames and nodes. The SP comes with a set of predefined system partition layouts for each standard configuration. These layouts have been selected in a way which meets minimal throughput capabilities. In addition, the SP comes with the System Partitioning Aid software which allows you to construct your own layouts. If none of the predefined layouts meets your system partitioning needs, you may define your own using the System Partitioning Aid or you may submit a Request for Price Quote (RPQ) to IBM to request additional layouts. See your IBM representative for more information on the RPQ process.

© Copyright IBM Corp. 1997

Default System Partition

Taking advantage of system partitioning is something you do by choice. However, the partitioning atmosphere is always present to some extent. In the beginning, when you have installed the PSSP software, but before you intentionally partition your system, there is one system partition which contains all of the nodes and its name is the same as the name of the control workstation. This is the *default* or *persistent* system partition. It always exists. When you choose a different partition layout, one of the resulting partitions is this default system partition. A new system partition is formed by taking nodes from an existing system partition(s) and collecting them as a new group.

Benefits of System Partitions

You gain the following benefits from using system partitions:

- The ability to run switch-based applications on a set of nodes without interfering with switch work on another set, regardless of application or node failures. In particular, the ability to isolate switch traffic, preventing it from affecting switch traffic in another system partition.
- The ability to separate a test area for application development from your production area.
- The ability to install and test new releases and migrate applications without affecting current work.
- The ability to have one operator manage, at a system level, more than one logical system from a single control workstation.
- The ability to separate system administration for each partition.

Change Management and Non-Disruptive Migration

You can test new levels of AIX, PSSP, LPPs, application programs, or other software on a system currently running a production workload without disrupting that workload. Such a system partitioning solution assumes that there are spare nodes available to set aside in a test system partition. This solution lets you run migration scenarios on the test partition nodes without interfering with day-to-day operations on the rest of the system. You can form and manage system partitions and then customize the partitions with software. These types of partitions are usually relatively static and long-lived entities.

Multiple Production Environments

You may also need to create multiple production environments with the same non-interfering characteristics as in “Change Management and Non-Disruptive Migration.” With system partitions these environments are sufficiently isolated so that the workload in one environment is not adversely affected by the workload in another environment. This is especially true for services whose usage is not monitored and not charged for, but which have critical implications for jobs performance, for example, the switch. System partitions let you isolate switch traffic in one system partition from the switch traffic in other system partitions.

Example 1 -The basic 16-node system

Figure 21 shows a simple 16-node system that contains one frame, one switch board, and 16 thin nodes installed. In this example, the nodes are named Node01, Node02, and so on up through Node16. You may name your nodes any way you want, but the nodes are also known by *node numbers*, and the node numbers are assigned in the same manner as they are named in this example: from bottom to top, left node then right.

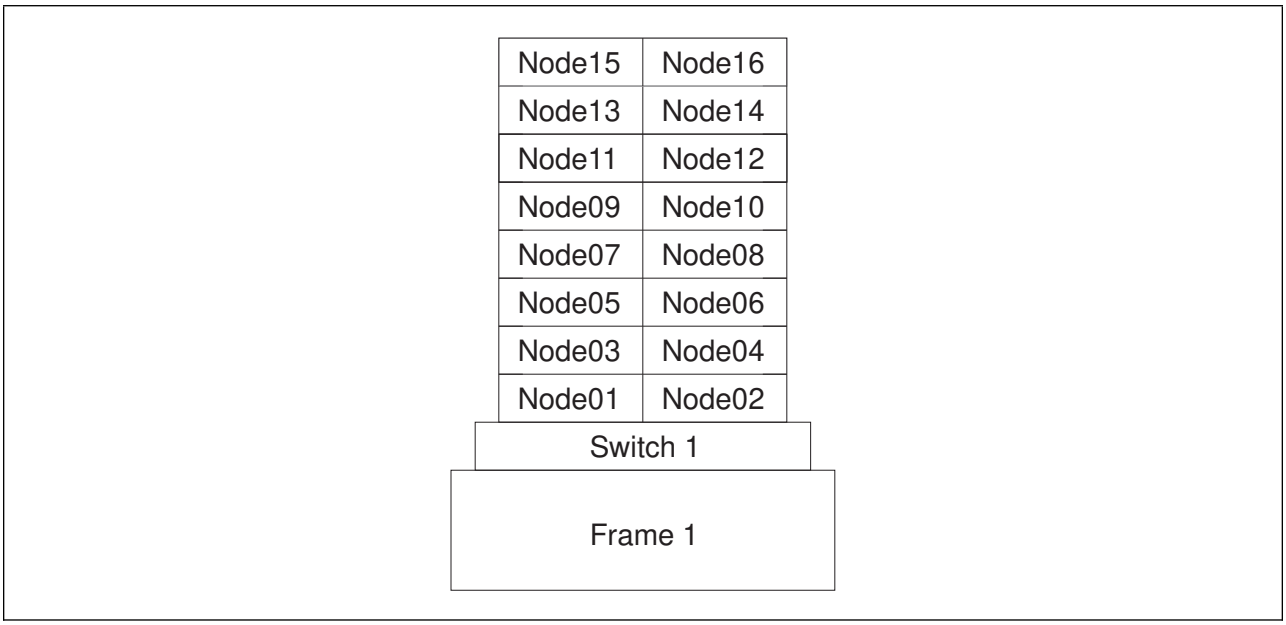

Figure 21. Simple 1-frame system

Assume that you owned this system, and that your day-to-day operations revolved around software called Application A, Version 1. Also, assume that you are interested in upgrading to Version 2 of Application A, and wish to try out the new version while still relying on Version 1.

After evaluating your current workload, you determine that any 12 nodes are sufficient to perform your normal activity and, therefore, you would like to set 4 nodes aside to try out Version 2. This means you wish to partition your 16-node system into 2 subsystems: a 12-node system partition and a 4-node system partition.

When you consult the predefined layouts shipped with your system, you find that several 4_12-layouts are provided for your 16-node system, and you decide to go with the following (listing node numbers rather than node names):

```
        Partition 1                 Partition 2
        -----------                 -----------
nodes   1,2,3,4,5,6             nodes 11,12,15,16
         7,8,9,10,13,14
```

You adopt this configuration using a simple SMIT panel, and begin running your production load on Partition 1. Your choice is pictured in Figure 22 on page 104.

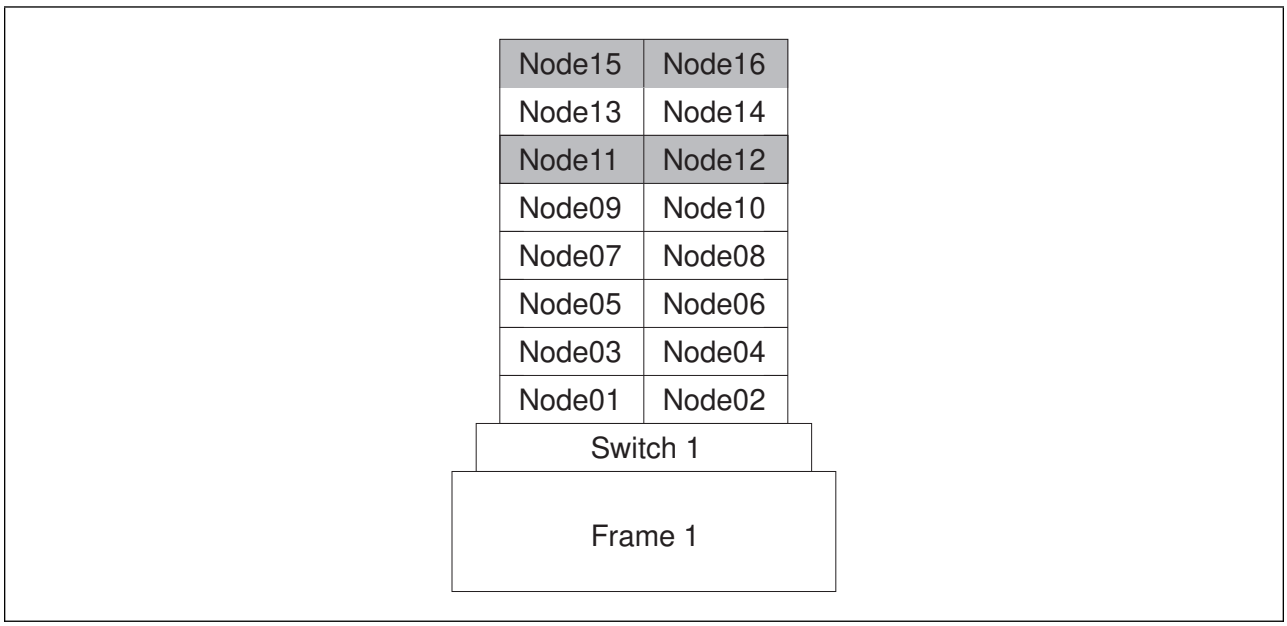

Figure 22. Partitioned 1-frame system

Next you install Version 2 of Application A (together with any prerequisite software and hardware) on the nodes of Partition 2, provide Partition 2 with suitable test data, and begin executing trial runs of Version 2 on Partition 2.

Again, the switch intensive portions of the applications of interest (Application A, Version 1 and Application A, Version 2) will run independently in their respective partitions. That is, your daily production runs and the Version 2 trial runs will not affect each other — in regard to switch performance. This is because the 4_12-layouts provided were constructed with that goal.

Using a Switch in a Partition

The SP supports the following switches:

- Scalable POWERparallel Switch (SP Switch)
- SP Switch-8
- High Performance Switch
- High Performance Switch-LC8 (cannot be partitioned)

The Physical Makeup of a Switch Board

Actually, your choice in Example 1 was not necessarily as simple as suggested. A full *switch board* (whether the High Performance Switch or SP Switch) consists of 8 *switch chips* as shown in Figure 23 on page 105. Each chip has 8 *ports* to which nodes and other switch chips may connect.

Precisely 4 of the switch chips may have nodes connected to them, as on the left side of the board in Figure 23 on page 105. These chips are called *node switch chips*. Due to physical choices made in the SP frame, the nodes are connected as shown in the figure. Notice the following:

1. Nodes 1, 2, 5 and 6 are attached to switch chip 5.

Note: Nodes connected to the same chip may communicate with each other via that chip.

2. Nodes 3, 4, 7 and 8 are attached to switch chip 6.
3. Nodes 9, 10, 13 and 14 are attached to switch chip 4.
4. Nodes 11, 12, 15 and 16 are attached to switch chip 7.
5. There are no direct links among chips 4-7, nor among chips 0-3.
6. Each of chips 4-7 is directly connected to all of chips 0-3. Therefore, for example, the nodes on switch chip 4 may communicate with the nodes on switch chip 7 via any of chips 0-3.

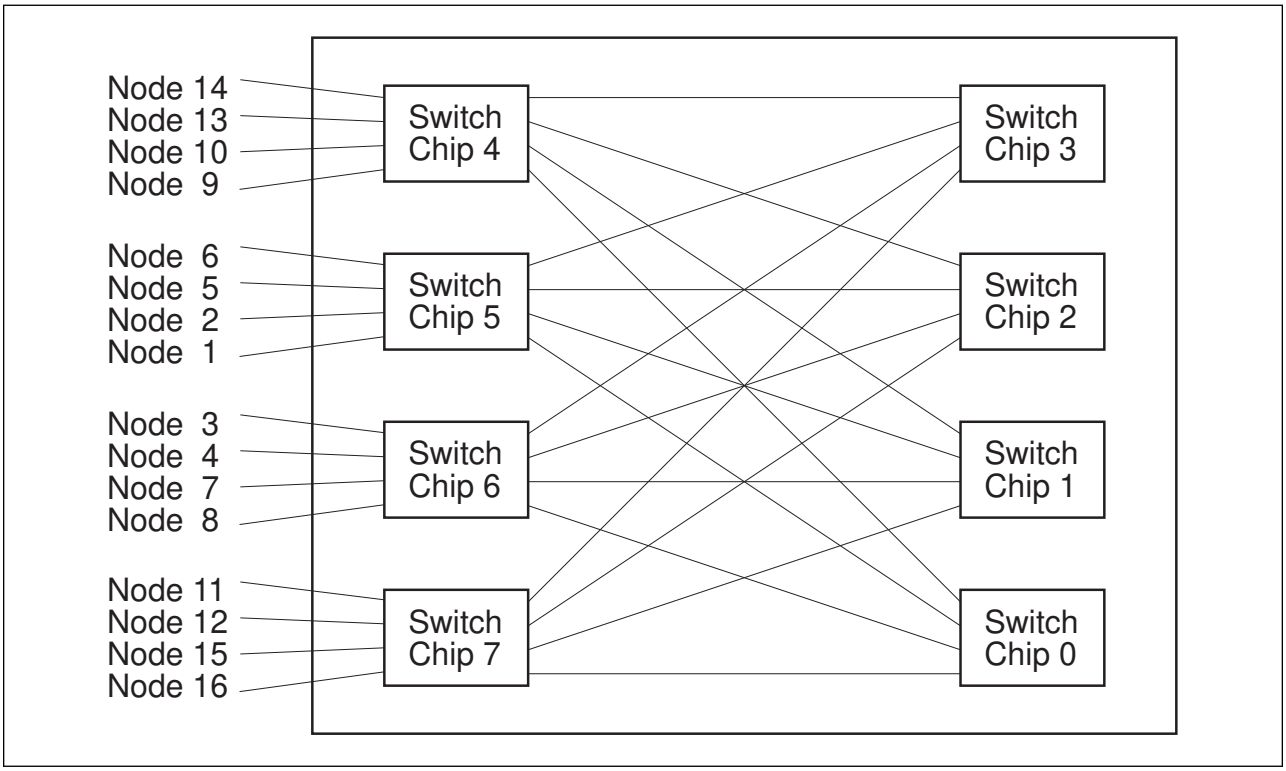

Figure 23. Full switch board

Chips 0-3 are called *link switch chips*, and are also used in multi-frame systems to connect the various switch boards to each other using ports not shown in the figure.

Systems with switches are assumed to be used in performance-critical parallel computing. One major objective in partitioning a system with a switch is to keep the switch communication traffic in one switch partition from interfering with that of another. In order to ensure this, each switch chip is placed completely in one system partition.

Any link which joins switch chips in different partitions is disabled, so traffic of one partition cannot enter the physical bounds of another partition. The result of the partitioning choice you made in Example 1 is shown in Figure 24 on page 106. Notice that the links from Chip 7 are missing in the diagram, indicating they have been logically removed from the active configuration, or disabled.

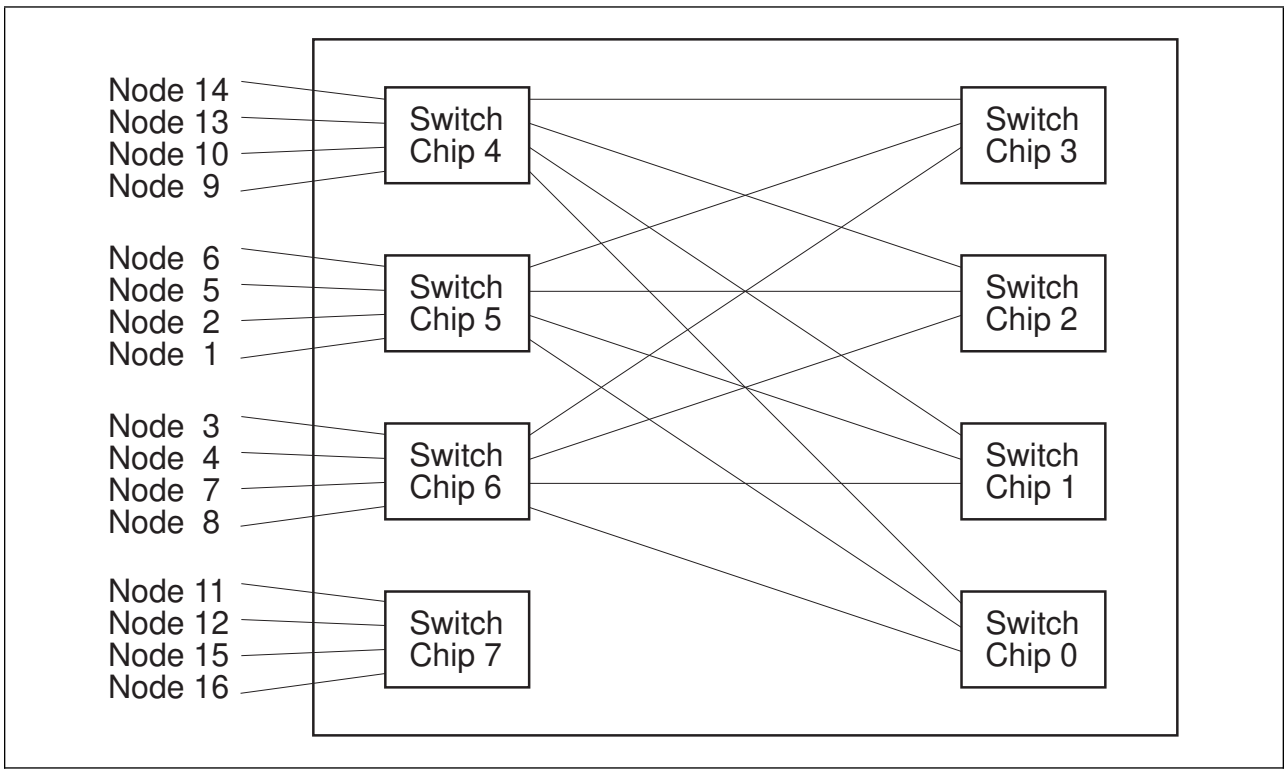

Figure 24. Nodes 11,12,15,16 partitioned off

Systems With a Low Cost Switch

The SP Switch-8 is the only *low cost* switch available for new systems however the High Performance LC-8 switch is available for existing systems. If your system contains the SP Switch-8, your system partitioning capabilities are restricted. The SP Switch-8, has only 2 chips with nodes attached. So, if you have the maximum 8 nodes attached to the switch, you have 2 possible configurations: a single-partition 8-node system, or 2 system partitions of 4 nodes each.

If your system has a High Performance Switch-8, all of your nodes are connected to a single switch chip, and therefore, only a single partition is possible.

Switchless Systems

One main consideration when planning for system partitions is the use of a switch. Partitioning, however, is also applicable to switchless systems. If you have a switchless system, and later add a switch, you may have to rethink your system partition choice. In fact you may want to reinstall ssp.top so that any special switchless configurations you have constructed are removed from the system.

If you choose one of the supplied layouts, your partitioning choice is "switch smart": your layout will still be usable when the switch arrives. This is because the predefined layouts are constrained to be usable in a system with a switch.

Such a layout may be unsatisfactory, however, for your switchless environment, in which case you may use the System Partitioning Aid to build your own layout.

Example 2 - A Switchless System

Figure 25 shows a switchless system having one frame and only 7 nodes. Partitioning this system might be helpful for migration testing similar to that discussed in Example 1. In this case, since there is no switch, we are not bound by switch chip-related rules. We can assign nodes to partitions in any way we want.

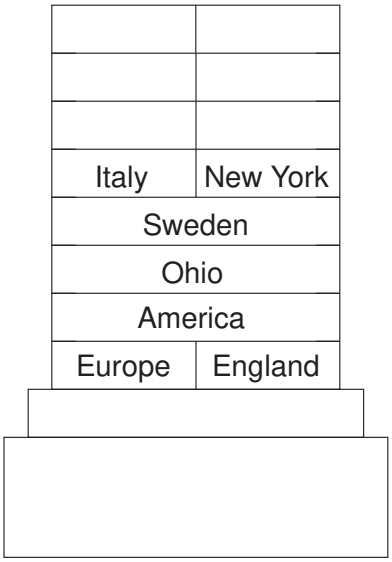

Figure 25. One sparse frame with no switch

So, for example, suppose you wanted to divide into 2 pieces as follows:

1. In Partition 1, group the Europe node and its affiliates, which are Italy, Sweden, and England.
2. In Partition 2, group the America node and its affiliates, which are New York and Ohio.

Using node numbers, you have:

```
              Partition 1                Partition 2
              -----------                -----------
        nodes  1,2,7,9               nodes  3,5,10
```

This configuration does not match any of the predefined layouts. Therefore, you would use the System Partitioning Aid to construct it.

The System Partitioning Aid

The System Partitioning Aid allows you to create a new system partition layout. In other words, if none of the layouts shipped with the SP meets your needs, you can use the System Partitioning Aid to generate one that does; and you may save this new layout for future reference.

The System Partitioning Aid provides both a Graphical User Interface (GUI) and command line interface. Once you are an "experienced partitioner", or in simple environments, the command line interface may serve your needs. While learning, or for more complex situations, you may find the GUI interface beneficial.

The System Partitioning Aid supports the partitioning of systems with up to 128 nodes, whether switchless or switched (contains one or more switches). However, any SP system must be switch-wise homogeneous: system partitioning does NOT allow a High Performance Switch system to be joined with an SP Switch system to form a single system; nor does it support the joining of switched and switchless systems.

Details on the System Partitioning Aid appear in the Administration Guide and the Command and Technical Reference but this chapter provides examples which help you understand its value.

Accessing Data Across System Partitions

In addition to the restrictions on switch traffic, as illustrated in Example 1, data cannot generally be shared across system partitions. Therefore:

- Access to IBM Virtual Shared Disks (VSDs) and pseudo-tape devices across system partitions is not supported.
- Twin-tailed disks cannot span system partitions.
- A physical file system, that is, the logical volumes containing the files, cannot span system partitions.
- You can use a distributed file system to mount filesystems across partition boundaries, just as you would use a distributed file system from one SP to another. Keep in mind that doing this may affect nodes in both partitions in terms of both CPU and network utilization.

The Relationship of SP Resources to System Partitions

The SP can have a variety of both hardware and software resources associated with it. This section discusses how these resources interact with each other with regard to system partitions.

Single Point of Control with System Partitions

You manage a partitioned SP system from a single point of control using the control workstation. From an administrative point of view, each partition is a logical SP system within one common administrative domain. This means that:

- Only one control workstation is needed. (If using a High Availability Control Workstation, two workstations are available, but only one is used as the control workstation at any point in time.).
- The hardware monitor allows an administrator to control and monitor the entire system or a system partition. The administrator can issue commands that affect one, several, or all system partitions.
- There is one Kerberos server for the entire system.

  Service Note

  Make sure you have applied the required corrective service to any PSSP 1.2 system partition for proper Kerberos operation.

- There is one user name space for the entire system.
- There is one accounting master for the entire system.

- The boot/install functions of a server node ignore system partition boundaries. However, a boot/install server must be at the same AIX and PSSP level as the nodes it is serving. Thus, an AIX 3.2.5 and PSSP 1.2 boot/install server is required for nodes in any AIX 3.2.5 and PSSP 1.2 system partitions.

The SP_NAME Environment Variable

The entire SP is one administrative domain for the system administrator, who manages the system partitions as logical SP systems. An administrator restricts interaction to a specific system partition by setting the SP_NAME environment variable to the name or IP address of that system partition.

On the control workstation, the administrator is in an environment for one system partition at a time, as defined by the SP_NAME environment variable. Any task performed at the control workstation that requires information from the SDR gets the information for the current system partition. The operator must either set the SP_NAME environment variable or issue a command that sets it. If SP_NAME is not set, the environment is the default (or persistent) system partition.

The SDR in a Partitioned System

The SDR contains data about the entire SP system. Generally, this data is separated into *system* (global) and *partitioned* classes. Requests made to the SDR, whether in software or manually, require an appropriate name or IP address for the system partition. If no such identifier is specified, the value of SP_NAME is used.

On the control workstation, the administrator is in an environment for one system partition at a time as identified by the SP_NAME environment variable. Any task performed at the control workstation that gets information from the SDR gets the information for the current system partition. Also, all global data (data affecting **all** system partitions) is accessible from any system partition.

Networking Considerations

System partitioning does not require physical changes to the networking configurations of a system. You should consider certain effects that may warrant a physical change.

Ethernet interference, causing slower performance, may occur between nodes on the same physical Ethernet subnetwork. If these nodes are in different system partitions, an action such as booting all the nodes in one system partition may adversely affect the other system partition. You should consider creating system partitions aligned on the physical Ethernet subnetwork boundaries. This is fairly straightforward for system partitioning where the partitioning is on frame boundaries.

There is no connectivity over the switch between system partitions. This means that a gateway node with routing set up to the switch network may require routing changes if the gateway is to remain a gateway for more than one system partition. You can do this using explicit host routes on the gateway node, or by enabling ARP on all system partitions and redefining the IP addresses within a system partition as a different subnetwork.

Boot/Install Servers for AIX 3.2.5 and PSSP 1.2 System Partitions

If you plan to configure your system with AIX 3.2.5 and PSSP 1.2 system partitions, you must configure a node in one of the AIX 3.2.5/PSSP 1.2 system partitions as the boot/install server for the nodes in such system partitions.

Choosing Boot/Install Servers for Your 3.2.5 Partition

If you have selected one or more of your partitions as a 3.2.5 base, you also need to make at least one, but preferably two, nodes in that partition a boot/install server for the other 3.2.5 nodes. You need to do this because when the 3.2.5 nodes are installed during preload, they are installed using a 3.2.5 control workstation. After the nodes have been installed and customized, the control workstation is reinstalled with 4.2.1. At this point, if the 3.2.5 nodes are pointing at the control workstation they will NOT be able to be reinstalled. Therefore, you should choose one node as a boot/install server for the other nodes. In addition, you should choose a second node to serve as a backup boot/install server for the first boot/install server selected previously.

When you choose a node to act as a boot/install server, the node keeps a copy of a **mksysb** in a separate file system. Therefore, you must plan for the space required to hold the **mksysb**, which must encompass all the relevant PSSP software.

Running Multiple Levels of Software Within a Partition

Remember that a system partition is an SP subsystem -- essentially a smaller SP carved out of the real one. You cannot expect the smaller SP to do what the larger cannot. However, beginning with PSSP 2.2, more flexibility was introduced to support migration and make it easier to upgrade production applications. The added flexibility comes from a migration tool known as coexistence. For additional information on this support, consult the Chapter Ten, Planning for Migration.

With coexistence, nodes can still be divided up into partitions. However, coexistence lets each node within that partition run its own individual version of PSSP. Within that node, any software that operates under that nodes version of PSSP will still function. Even though the nodes are running a variety of PSSP levels, the SP system still functions normally. Therefore, you can now migrate your SP system one node at a time.

In PSSP 2.3, coexistence supports system partitions containing nodes running any combination of PSSP except that PSSP 2.1 and 1.2 **can not** coexist in the same partition. The specific PSSP combinations allowed are:

- Nodes running either PSSP 2.3, PSSP 2.2 PSSP 1.2
- Nodes running either PSSP 2.3, PSSP 2.2 PSSP 2.1
- Nodes running either PSSP 2.3 or PSSP 2.2
- Nodes running either PSSP 2.3 or PSSP 2.1
- Nodes running either PSSP 2.3 or PSSP 1.2
- Nodes running either PSSP 2.2 or PSSP 2.1
- Nodes running either PSSP 2.2 or PSSP 1.2

Overview of Rules Affecting Resources and System Partitions

The SP resources must conform to certain rules if they are to be a part of a system partition. The following list provides an overview of these rules:

- An un-partitioned SP is treated as a single system partition.
- The number of system partitions you can define is dependent upon the size of your SP and depends on the way that nodes are connected together. In order to achieve isolation between system partitions, the nodes connected to the same switch chip belong to the same partition.
- Each system partition in a system having a switch has a primary node for switch initialization. If the switch is an SP Switch, then each system partition also has a backup primary node.
- Each system partition has an associated topology file which defines the portion of the switch network which it owns. Switch initialization occurs within a system partition -- for that portion of the switch fabric defined by the corresponding topology file.
- Switch operations and message traffic are managed within a system partition.
- Jobs controlled by the Resource Manager are contained within a system partition and each system has both a primary and backup Resource Manager. The Resource Manager pools cannot cross system partition boundaries. and only one system partition can be part of any one LoadLeveler cluster when the Resource Manager is used by LoadLeveler. In addition, a LoadLeveler class must be within a single system partition when the Resource Manager is used by LoadLeveler.
- The IBM Virtual Shared Disk support and the pseudo-tape device driver cannot cross system partition boundaries. The IBM Recoverable Virtual Shared Disks and twin-tailed disks must be connected to nodes within the same system partition.

  A physical file system, that is, the logical volumes containing the files, cannot span system partitions.
- Each system partition has subsystems that are system partition-sensitive because they operate within a partition rather than throughout the entire system. These subsystems (such as, hats, hb, and hags) are managed by the Syspar Controller which operates through the **syspar_ctrl** command. This command provides a single interface to control system partition-sensitive subsystem scripts. For more information see *Administration Guide*
- HACMP clusters do not span system partition boundaries.

System Partitioning for Systems with Multiple Node Types

There are three physical node images supported in the SP: thin, wide, and high. These physical images affect the membership possibilities of system partitions. To understand how you can run multiple node types within a partition, you need to understand node slots. A *node slot* is the space that one thin node can occupy.

Thin Node Frames

There are 16 node slots in an SP frame. Figure 26 shows how the slots are numbered in a frame. In Example 1, we considered a 1-frame system of 16 thin nodes. In that case, there is one node per slot, and the number of a node is precisely the number of the slot it occupies.

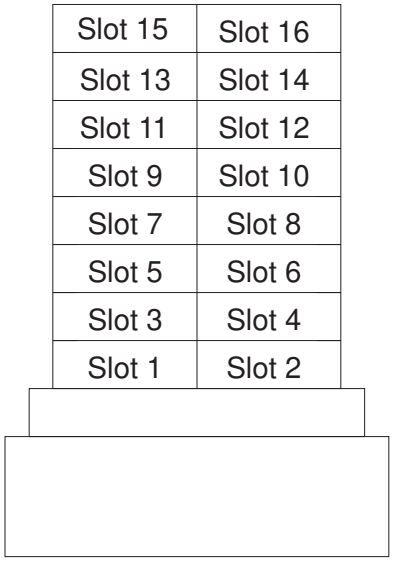

Figure 26. One frame with slots numbered

Partitioning with Wide and High Nodes

A wide node occupies two adjacent slots (a drawer) and a high node occupies four adjacent slots (2 adjacent drawers). The correspondence between node numbers and slot numbers is a topic of Example 3. For now, remember a node's node number is the lowest numbered slot which it occupies. As you plan your system partitions, think in terms of slots. Then you can decide what combination of thin, wide, and high nodes you want to occupy those slots.

Figure 27 on page 113 shows a frame populated with 3 wide, 1 high, and 6 thin nodes. The nodes in that figure have been given simple names using their node number. Note that nodes 2, 8, 10, 11, 12, and 14 do not exist. The preceding discussion expands to the following complete summary for the slots for the frame of Figure 26:

- Slots 1 and 2 contain wide node 1
- Slot 3 contains thin node 3
- Slot 4 contains thin node 4
- Slot 5 contains thin node 5
- Slot 6 contains thin node 6
- Slots 7 and 8 contain wide node 7
- Slots 9, 10, 11, and 12 contain high node 9
- Slots 13 and 14 contain wide node 13
- Slot 15 contains thin node 15
- Slot 16 contains thin node 16

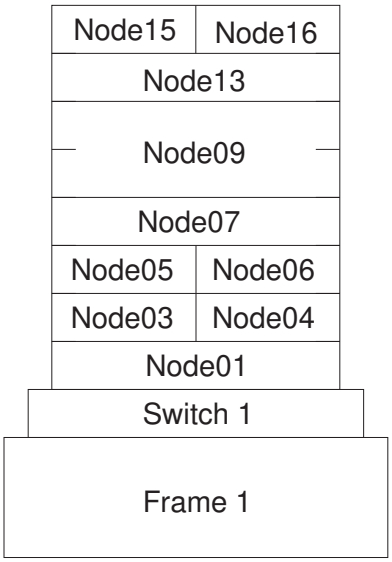

Figure 27. Varied Node, 1-frame System

In a switched SP, the switch chip is the basic building block of a system partition: if a switch chip is placed in a partition, then any nodes connected to that chip's *node switch ports* are members of that partition, also. So, any system partition in a switched SP is comprised physically of switch chips, any nodes attached to ports on those chips, and links which join those nodes and chips.

A system partition can be no smaller than a switch chip and the nodes attached to it; and those nodes would occupy some number of slots in the SP system. The following are examples of what is possible for a single switch chip to which nodes attach:

- Four thin nodes attached (4 slots)
- Three thin nodes attached (3 slots) and one unused node switch port
- Two wide nodes attached (4 slots) and 2 unused node switch ports
- One wide node and two thin nodes attached (4 slots) and 1 unused node switch port
- One wide node and one thin node attached (2 slots) and 2 unused node switch ports
- One high node and two thin nodes attached (6 slots) and 1 unused node switch port

  Note: A high node occupies 4 adjacent slots. The high node is attached to one switch chip at one port.

- One high node and one wide node attached (6 slots) and 2 unused switch ports

In practice, every slot is assigned to some chip, via fictitious nodes if necessary, so that if that slot is later filled with a node, it is not a major reconfiguration event.

Example 3 - An SP with 3 frames, 2 switches, and various node sizes

Note:

Please recognize that you may not be able to order the system discussed in this example. This system has nodes located in legitimate locations. However, the models available for order from IBM may not include this configuration. After time passes, however, you may add, delete and move nodes of your system such that you arrive at a similar system.

Figure 28 shows a 3-frame system containing wide nodes, thin nodes and high nodes. The nodes have been named in accordance with their frame and slot location.

There is a switch in each of the first and third frames. The second frame is sharing the first frame's switch, which is possible because the configuration matches number 1 in Figure 11 on page 82. At most 16 nodes we may connect to a switch board, and since Frames 1 and 2 have only 11 nodes total, there even appears to be room for some future expansion.

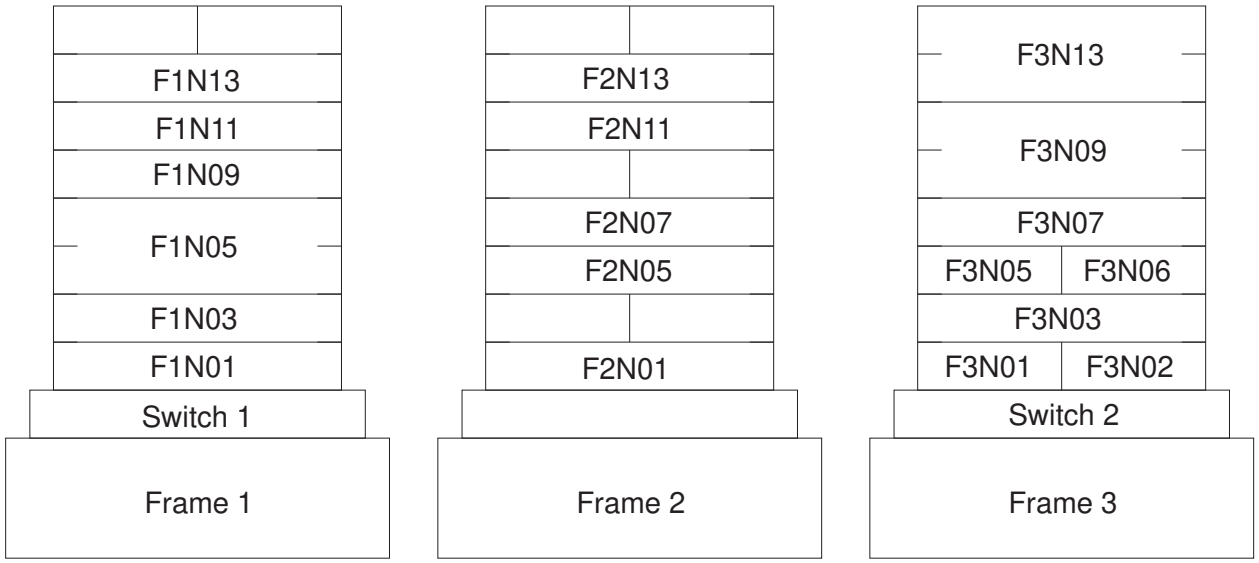

Figure 28. Three frames with 2 switches

The nodes in a system are assigned node numbers sequentially across the frames, bottom to top, and left to right, except that node numbers are skipped to accommodate later expansion and node shifting. Put another way, the first 16 node numbers are assigned to the 16 slots of the first frame, the next 16 node numbers to the 16 slots of the second frame, and so on. The following are cases where node numbers are skipped:

1. A wide node takes up a second slot
   - For example, there is no F1N14, or node number 14, because wide node F1N13 occupies both of slots 13 and 14 of Frame 1
   - and there is no F2N08, or node number 24, because wide node F2N07 occupies both of slots 7 and 8 of Frame 2
2. A high node takes up three additional slots

- for example, F1N06, F1N07 and F1N08 (node numbers 6-8) cannot exist because high node F1N05 takes up all of slots 5-8 in Frame 1

3. A slot is left empty
   - For example, there is no F1N15, or node number 15, because slot 15 in Frame 1 is unoccupied
   - And there is no F2N03, or node number 19, because slot 3 of Frame 2 is unoccupied

So, how do the nodes in this system attach to the switches? Each switch may have 16 nodes attached. Therefore, the system has 32 *node switch ports*. It is necessary that the system know to which of these ports each node is connected. These node switch ports are numbered 0 through 31, and the *switch port number* of a node is the number of the node switch port to which it is connected. The switch port number of a node is sometimes called its *switch node number*.

In the 16-node system of Example 1, a node's switch port number is one less than its node number, because switch port numbers start at zero. Therefore, node number 1 has switch port 0, and so on up through node number 16 which has switch port number 15.

Note: Although this discussion may sound complicated, it really isn't. Just keep in mind that a node generally sits in the midst of a large system, and at any point in time, you might care about any one of the following:

- Where does the node sit in its frame? (slot number)
- What is the node's position relative to all the rest of the nodes in the system? (node number)
- Where does the node connect to the switch fabric? (switch port number, or switch node number)

You may ascertain the current node number mapping for a system under operation by issuing the command **sysparaid -i**.

When possible, switch connections are made as illustrated in Example 1. Therefore, in Frame 1 of Figure 28 on page 114, F1N03 sits in slot 3, is node number 3 and has switch port number 2. The wide node F1N01 is node number 1 and uses switch port number 0.

There is no node number 2, and so switch port number 1 is not used by Frame 1. However, F2N01 in Frame 2 needs a switch port, and is a likely candidate to take the place of the missing node number 2 on Switch 1. So, F2N02 occupies slot 1 of Frame 2, is node number 17 in the system, and uses switch port number 1.

Continuing along this track, F1N05 uses switch port number 4, and F2N05 uses switch port 5. Switch port 6 is unused since there is no F1N07, but switch port 7 is unused by F2N07.

Switch port numbers continue on with the next switch of the system. So, F3N01 uses switch port 16, F3N02 uses switch port 17, and so on. However, the F3N01 is node number 33 and F3N02 is node number 34.

Now, assume you wished to partition this system as follows:

```
Partition 1 - F1N01, F2N01, F1N05, F2N05,
              F1N03, F2N07
Partition 2 - F1N09, F1N13, F2N13
              F1N11, F2N11
Partition 3 - F3N01, F3N02, F3N05, F3N06,
              F3N03, F3N07,
              F3N09, F3N13
```

The nodes are listed in this order on purpose — by switch chip. This layout is not among the predefined ones shipped with the SP. So, you may employ the System Partitioning Aid to help specify this layout. First, recognize that for this system to ever have been operational, the system was installed and its specific makeup (existing frames, existing switches, node names, node types, node numbers, switch port numbers, etc.), was stored in the SDR. So, the System Partitioning Aid has that data to build upon. To specify the system partitioning layout you want, you may do one of the following:

1. Invoke the System Partitioning Aid from the command line, specifying the partitions via node lists in an input file. For more information see: *IBM Parallel System Support Programs for AIX: Command and Technical Reference*, GC23-3900
2. Bring up the GUI version of the System Partitioning Aid, and select the nodes for each partition using a pointer device.

   Note: The GUI version of the System Partitioning Aid is available only under the new *SP Perspectives*. Also, one may actually plan for such a system before it is realized. This topic is discussed in Appendix A, “The System Partitioning Aid - A Brief Tutorial” on page 175.

In either case, the System Partitioning Aid will not allow you to do something inappropriate like split a switch chip among partitions; nor define a partition having extremely poor bandwidth or reliability over the switch. (See the IBM RS/6000 SP Systems: Administration Guide for additional information on such restrictions.) When you are satisfied, the System Partitioning Aid will save your layout information in an appropriate directory. Note that layouts are classified based on chip assignments and the maximum number of nodes which may be attached to those chips. Therefore, this layout would be saved as an 8_8_16-layout. (8+8+16 = 32 nodes is the maximum number of nodes which may attach to 2 switches.)

System Partitioning Configuration Directory Structure

System partitioning is supported by the SP software's ssp.top option. You may choose to install this support when you install PSSP on the control workstation. This provides the system with a directory of predefined system partitioning layouts, as well as the System Partitioning Aid, a tool for building additional layouts. The directory is represented in Figure 29 on page 118. An introduction to the System Partitioning Aid is provided in Appendix A, “The System Partitioning Aid - A Brief Tutorial” on page 175.

For system partitioning purposes, a system is cataloged by its switch configuration. How many node slots in the system are used, and what type of nodes the system contains play a role in how you wish to partition your system. *However, the quantity and kinds of switches determine the options.*

A switch board to which nodes are connected is called a *Node Switch Board* or *NSB*. In larger systems, it becomes impossible to adequately connect all pairs of NSB switch boards to each other, and so additional switches boards are inserted just to provide additional connectivity. These "extra" switch boards have no nodes attached, just other switch boards. So, such a switch board is called an *Intermediate Switch Board* or *ISB*.

For example, the 1-frame system considered in Example 1 is classified as a 1nsb0isb system: it has 1 NSB and 0 ISBs. The system of Example 3 had 3 frames, but only 2 switch boards, and is a 2nsb0isb system.

The **syspar_configs** directory within the **spdata** file system serves as the home for all system partition configuration information. Figure 29 on page 118 shows this directory structure. In this figure, the subdirectory 2nsb0isb is expanded to illustrate the predefined layouts available for such systems:

1. Such a system has a maximum of 32 nodes -- 2 switches with up to 16 nodes each.
2. Using the predefined layouts shipped with the SP, such a system may be configured as (partitioned into) 4_28, 8_24, or 16_16 subsystems; or it may be used as an undivided 32-node system.

   Note:

   a. "Example 3 - An SP with 3 frames, 2 switches, and various node sizes" on page 114 illustrates how to construct a new 8_8_16 layout. You could use the System Partitioning Aid to save this layout, in which case, the System Partitioning Aid would have introduced a corresponding new config.8_8_16 directory in the 2nsb0isb subtree. Within that new config-level directory, a layout subdirectory would be introduced named layout.<name_desired> where <name_desired> is a name we specified to the System Partitioning Aid.

   b. "Example 2 - A Switchless System" on page 107 illustrates (implicitly) how to construct a new, switchless 4_12 layout. Although only 7 nodes were available, we had a full frame for which the maximum size system is 16; categorization is based on the maximum number of nodes, and any unlisted nodes go in the last partition. If you used the System Partitioning Aid to save this layout, the System Partitioning Aid would save it in the 1nsb0isb subtree as 1nsb0isb/config.4_12/layout/layout.<name_desired> where <name_desired> is a name we specified to the System Partitioning Aid.

3. For the 4_28 case, there are 8 different layouts available — one for each of the 8 node switch chips in the 2 switches.
4. For each available layout, the corresponding subdirectory contains a description file (layout.desc), and the specifics of the individual system partitions: its nodelist file and its topology file.

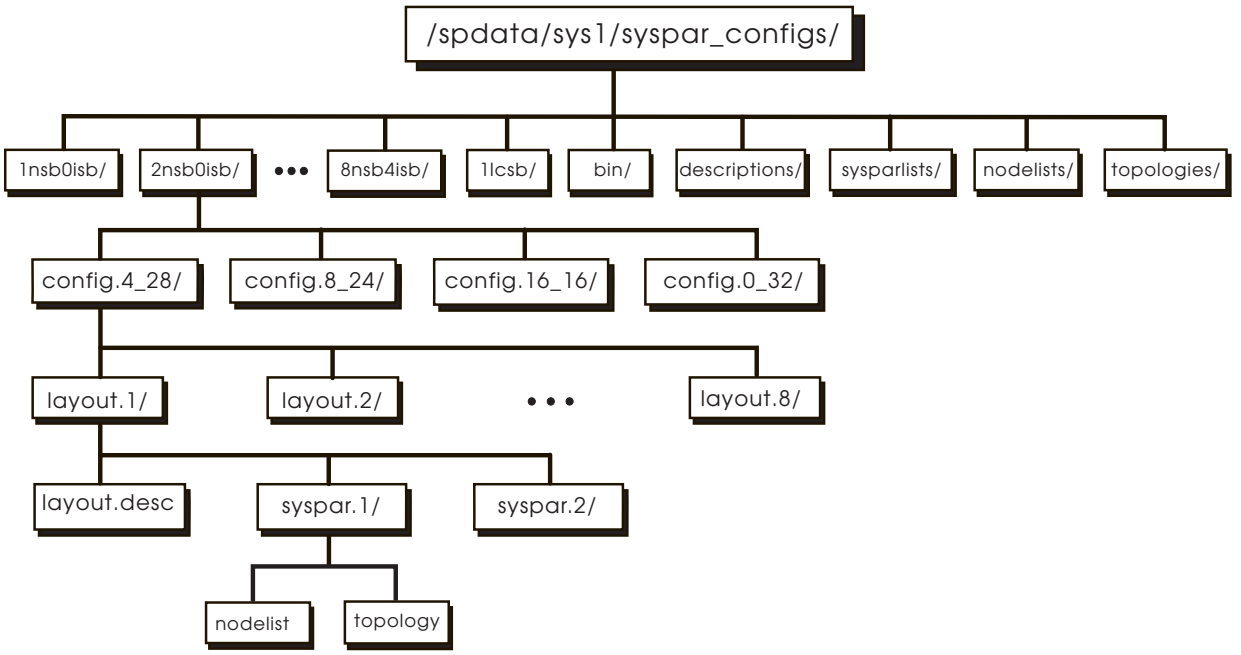

Figure 29. The Directory Structure Of System Partition Information

The higher-level directories **descriptions sysparlists**, **nodelists** and **topologies** contain the files common to various configuration layouts. For predefined layouts, the low-level files **layout.desc**, **nodes.syspar**, **nodelist**, and **topology** are actually links into these higher-level directories. For layouts constructed via the System Partitioning Aid, no links are used; the actual files are stored at these lower levels.

The specifics of each of the predefined configurations appears in Appendix A. You may wish to consult that information in conjunction with worksheets you completed in Appendix C, “SP System Planning Worksheets” on page 223.

Chapter 6. Planning for Security

Analyzing company resources and protecting these resources is part of the administrator's duties. Your resources with regard to PSSP include the following:

- System and application data, user programs, and user data
- Communications devices and communication access methods
- Login permissions. Specifically, who can login, when they can login, and how much resource each user can have.
- Authentication, passwords, and Kerberos tickets.

This chapter describes how authentication services work in the SP so that you can plan your authentication use.

Authentication in the SP System

If you are unfamiliar with Kerberos terminology, you may want to review the definitions of these and other terms used to describe the security facilities in the *Administration Guide*

The SP authentication services are based on Version 4 of MIT's Kerberos security facility. It is a *de facto* standard authentication protocol that has several implementations, including use by AFS. Authentication allows networked applications (applications that have client and server parts executing on different hosts) to securely determine their mutual identities through a trusted third party. This includes the Kerberos authentication and key distribution center (KDC). This service is provided by one or more Authentication servers (daemons) running on systems that are accessible from application client server systems, providing credentials that they use to perform the authentication task.

When there is more than one authentication server system, one is the primary server and all others are secondary servers. The primary server also maintains the master copy of the authentication database. Secondary servers operate using copies of the master database, updated periodically at the discretion of the system administrator. The authentication database contains an encrypted key (password) for each client and server entity, known in Kerberos terminology as a *principal*.

Authentication Principals

The identities that the authentication service verifies are registered in the authentication database. There are basically two kinds of principals: users, who assume the role of clients when they invoke authenticated services; and the services that these users invoke. SP authentication principals are defined across a collection of systems known collectively as the local authentication realm. Each realm has a primary authentication server, any number of secondary servers, and client systems (systems that have PSSP authenticated services installed but are not authentication servers).

Each principal's full identifier has the form: `name.instance@realm`.

where: `name` is a user of service name

© Copyright IBM Corp. 1997

`instance` is a qualifier used to identify multiple principals with the same name. For users, this allows the assignment of different roles and privileges to each instance. For services, instance is used to distinguish between identical application servers running on multiple hosts. For PSSP authenticated services, it is derived from the hostname used to access a particular instance of the server daemon.

`realm` is the name of the realm in which the principal is defined. The entire SP system, including its control workstation is always in a single realm.

Ordinarily, a user principal is known by a simple name that is the same as the AIX login name. It is not required to be the same, however, because principal names are managed separately and logging into the SP system as an AIX user is independent of the procedure for establishing one's identity as an authentication principal. User principals are defined by authentication administrators; the first is defined when the primary authentication server is configured. Administrators of the PSSP authentication database have principal identities of <name>.admin. AFS authentication administration does not use instances in its principal identifiers.

Examples of user principals on an SP system are:

```
frank
root.admin
operator
melissa.admin
kelly.sysprog
```

SP Service Principals

Because authenticated application services are provided by separate servers (daemons) on individual workstations or nodes, each instance of a daemon must be distinguished from others like it running on different hosts. Client programs identify the target of a request by a hostname that represents a particular network interface on the server host. The hostname is supplied explicitly by the client interface, such as on the rsh command; or it is provided implicitly as with the SP_NAME environment variable used by the System Monitor interface. The service principal associated with a particular target hostname is identified as <*service*>.<*host*> where:

<*host*> is the short form of the fully-resolved hostname, converted to lower-case. Therefore, for example, if a target node has three network interfaces:

1. The internal ethernet with hostname SP12, which resolves to Node12
2. A token ring with hostname tr12.abc.com
3. An SP Switch with hostname sw12, which resolves to Switch12.abc.com

PSSP authenticated services will define three service principals for this node named rcmd.node12, rcmd.tr12, and rcmd.switch12, that it will use to perform authentication on client requests arriving through the respective interfaces.

The SP system includes versions of the **/usr/lpp/ssp/rcmd/bin/rsh** and **/usr/lpp/ssp/rcmd/bin/rcp** commands that use SP authentication services. These commands are used by SP installation and configuration scripts and are available for general use by system administrators. The SP System Monitor command-line and graphical interfaces, and the remote execution facilities of **dsh** and **sysctl** also use authentication services. This suite of administration tools uses two service principals: the System Monitor applications use the **hardmon** principal, and the

other facilities use the **rcmd** principal. Instances of **hardmon** are defined on the SP control workstation and on other RS/6000 workstations on which the SP authentication services are initialized. Instances of the **rcmd** service principal are defined on the same systems as the **hardmon** principal, plus each SP node.

Administrative Principals

Initializing authentication services requires defining at least one user principal, who is authorized to perform installation tasks. A system administrator, logged on as **root**, must assume the identity of this principal. When you use authentication services provided by AFS or another Kerberos implementation, this principal should already exist in the authentication database. For SP authentication services and other MIT Kerberos Version 4 implementations, the administrator's principal can have any name with an instance of **admin**. An AFS principal has administrative authority if it has an **admin** attribute in its definition.

Deciding on Your Authentication Configuration

This section describes the various ways you can configure an SP system in an authentication realm. The following sections illustrate the possible authentication configurations used with the control workstation. The configurations also include other RS/6000 workstations on which you install SP authentication services, and non-RS/6000 workstations, when the authentication servers are configured in each of the supported manners. The control workstation and the SP nodes are always in a single authentication realm, which may optionally include other workstations and even other SP systems. The authentication servers can be on any workstation in the realm, but not on SP nodes. If you have AFS installed on your workstations, you may choose to use AFS servers for authentication, but are not required to do so. If you do not use AFS, you may use SP authentication servers or other MIT Kerberos Version 4 servers. The SP nodes will have authentication services installed for all authentication configurations.

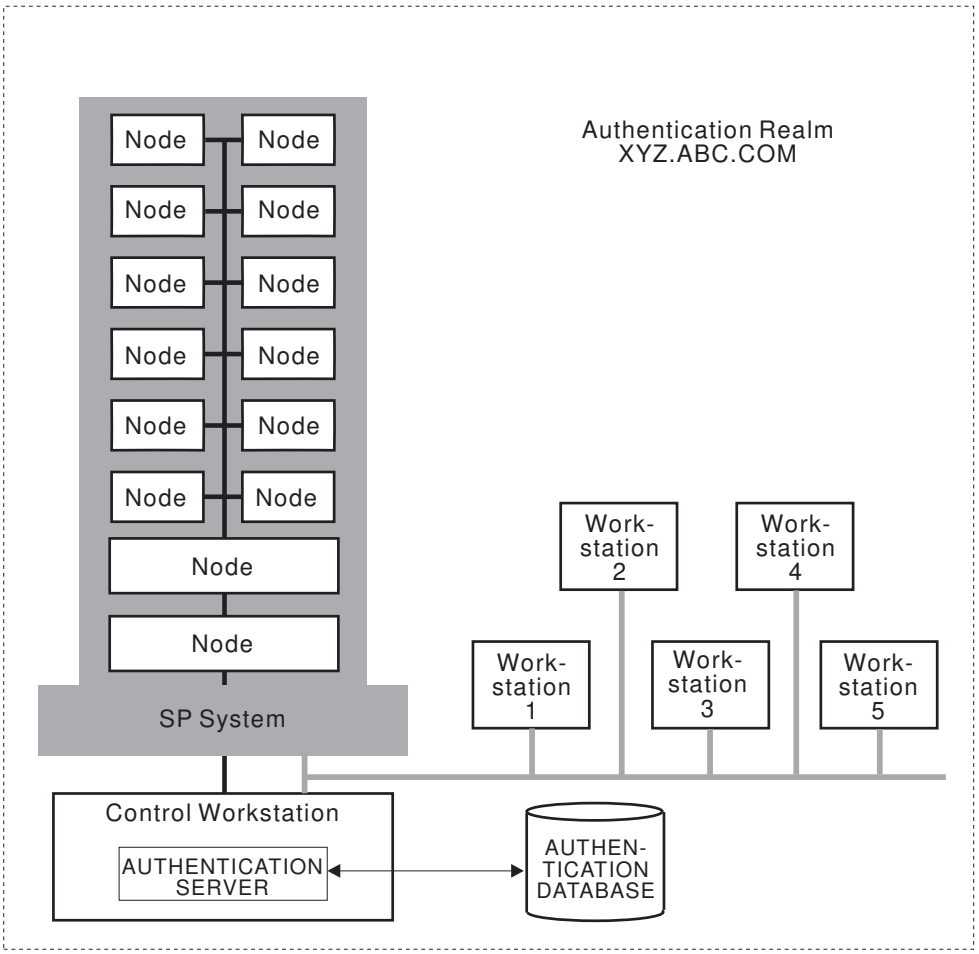

Figure 30. The control workstation as primary authentication server

CWS-Primary

Figure 30 illustrates this configuration as follows:

- The control workstation is the primary authentication server, with the SP authentication server (fileset ssp.authent) and authenticated services (fileset ssp.client) installed.
- Other RS/6000 workstations may be secondary authentication servers, with the SP authentication server installed.
- Other RS/6000 workstations may have SP authenticated services installed.

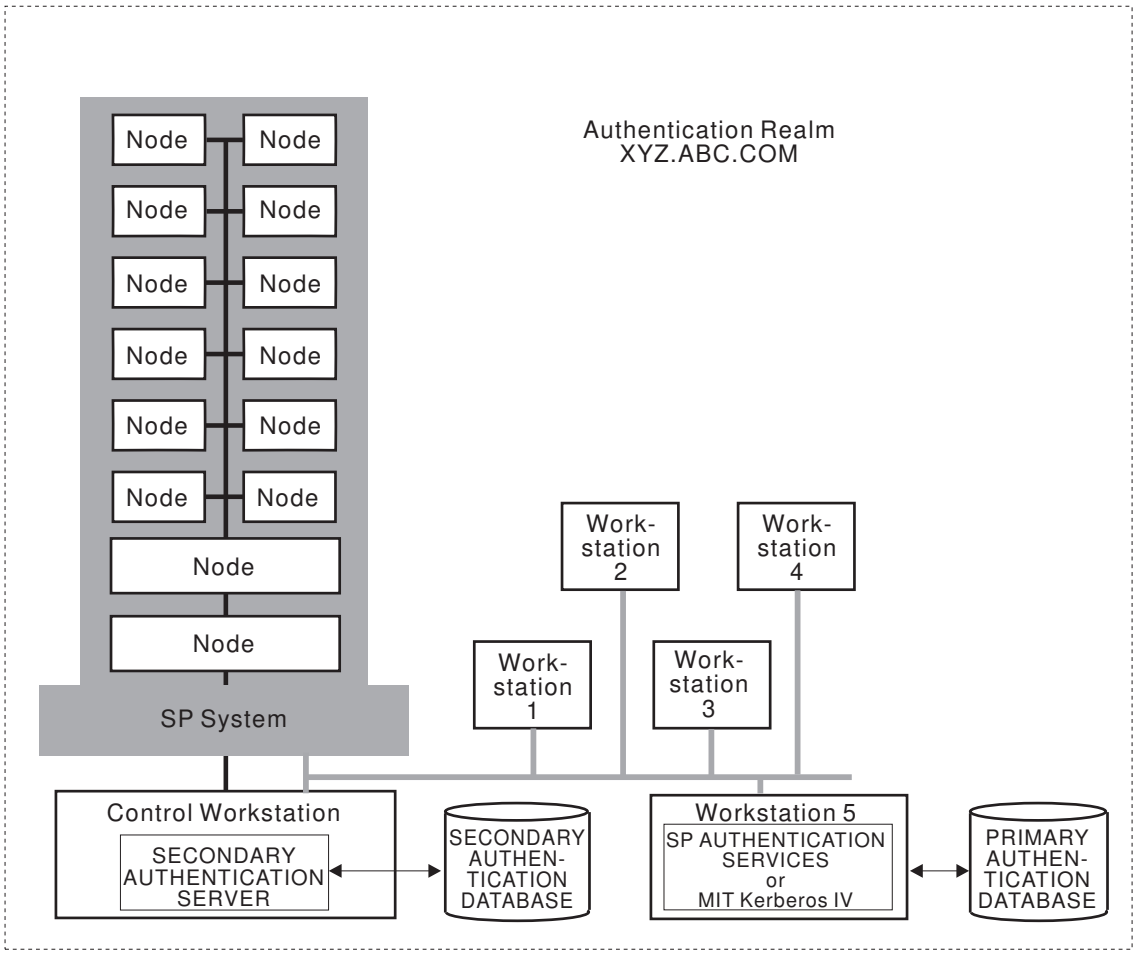

Figure 31. The control workstation as secondary authentication server

CWS-Secondary

Figure 31 illustrates this configuration as follows:

- The primary authentication server is either:
  1. A RS/6000 workstation with the SP authentication server (fileset ssp.authent) and authenticated services (fileset ssp.clients) installed.
  2. A workstation with another MIT Kerberos Version 4 implementation.
- The control workstation is a secondary authentication server, with the SP authentication server and authenticated services installed.
- Other RS/6000 workstations may be secondary authentication servers, with the SP authentication server installed.
- Other RS/6000 workstations may have SP authenticated services installed.

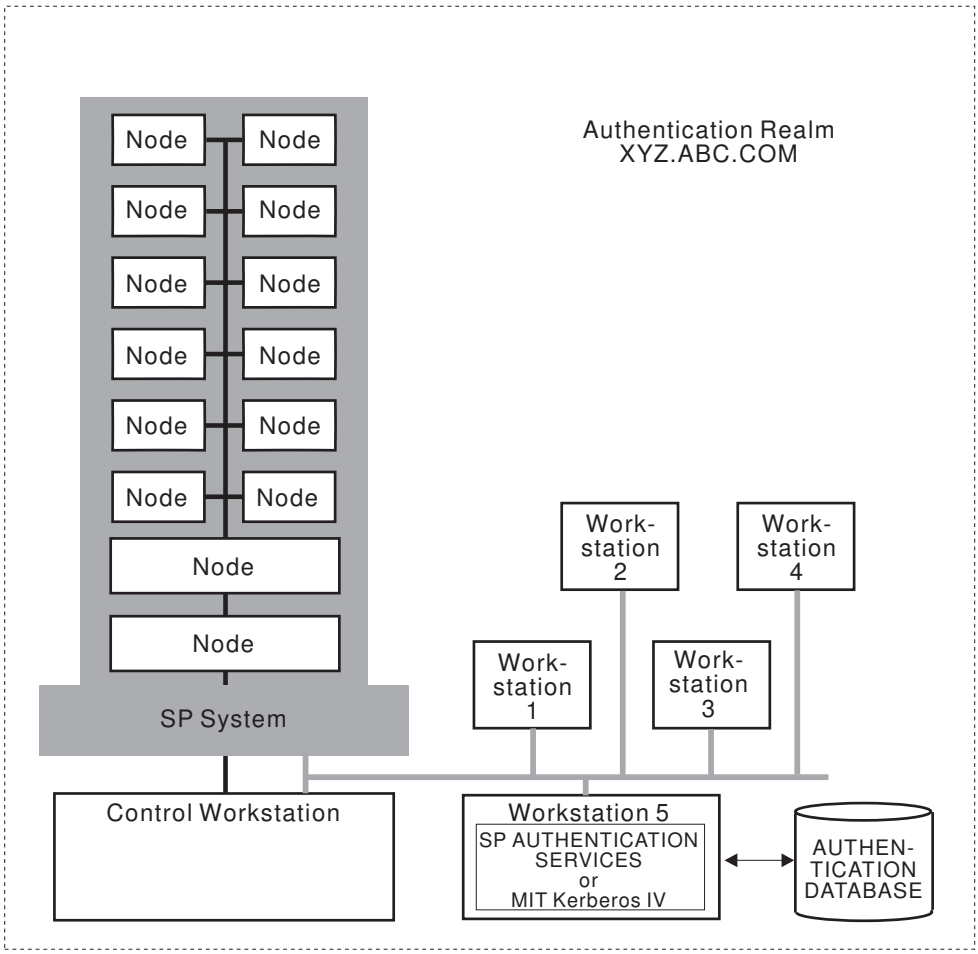

Figure 32. The control workstation as client of authentication server

CWS-Client

Figure 32 illustrates this configuration as follows:

- The primary authentication server is either:
  1. A RS/6000 workstation with the SP authentication server (fileset ssp.authent) and authentication services (fileset ssp.clients) installed.
  2. A workstation with another MIT Kerberos Version 4 implementation.
- Other RS/6000 workstations may be secondary authentication servers, with the SP authentication server installed.
- The control workstation has SP authenticated services installed.
- Other RS/6000 workstations may have SP authenticated services installed.

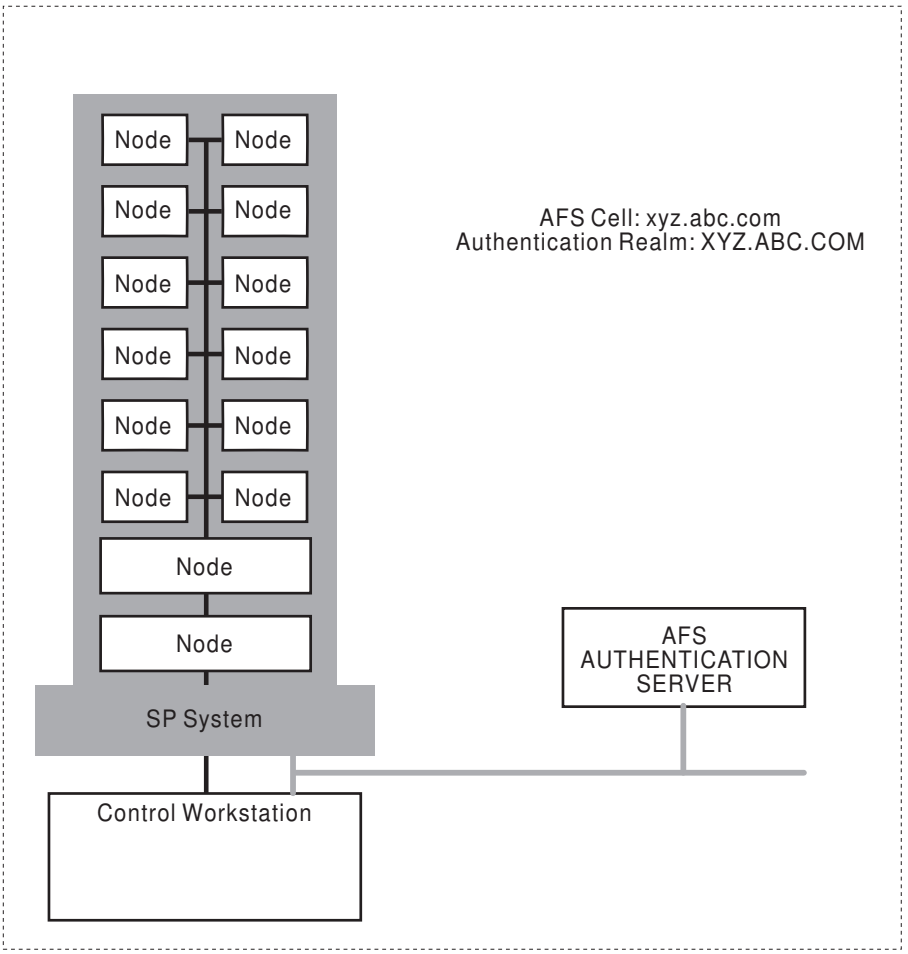

Figure 33. Using AFS authentication services on the SP system

AFS Server

Figure 33 illustrates this configuration as follows:

- The authentication servers are AFS servers, on the control workstation or other workstations.
- All workstations, including the control workstation, have AFS client services installed.
- The control workstation has SP authenticated services (fileset ssp.clients) installed. installed.
- Other RS/6000 workstations may have SP authenticated services installed.

Deciding on Authentication Realms

If you are using AFS authentication servers, your authentication realms are the same as your AFS cells. The name of the local realm for the SP system will be automatically set to the name of the AFS cell of the control workstation, and is converted to upper case.

When you are not using AFS, the following considerations apply. A SP system must be installed in a single authentication realm. This is the case if you are installing SP authentication on only the control workstation. The authentication realm could be an existing realm, consisting of systems using another Kerberos implementation, to which you add the SP system. You can give the realm any

name you like or default the authentication realm name to the domain part of the server's hostname, converted to upper case.

Whenever you have additional SP systems or other workstations using authenticated services, you must decide whether you want them all in the same realm, sharing a single set of principals in one master authentication database. Generally a single realm is easier to manage and easier for users who don't have to concern themselves with selecting the correct realm when identifying a principal.

If there is to be any use of authenticated services between two different authentication realms, each realm must have a unique name. If you choose to have multiple realms, and there are systems in both whose hostnames have the same domain part, you can configure only one using the default authentication realm name. If there is any chance that you would add additional authentication realms and want to use authenticated services between systems in them, it is best to create your own non-default, and presumably meaningful realm names when you plan your configuration.

See the section on working with authentication realms in *IBM RS/6000 SP Systems: Administration Guide* for more information.

Creating the Authentication Configuration Files

For some of these configurations, you need to create a configuration file (**/etc/krb.conf**) that lists the local realm name and all server hostnames. The following list identifies the cases in which you must provide the **/etc/krb.conf** file, and shows simple examples:

CWS-Primary

Optional - you must supply the file only if there will be one or more secondary servers on RS/6000 workstations.. If the **/etc/krb.conf** file is not supplied, **setup_authent** creates a file listing the local host as the primary server. For example:

```
XYZ.COM
XYZ.COM spcw.xyz.com admin server
XYZ.COM ksecondary.xyz.com
```

CWS-Secondary

Required - control workstation is listed as a secondary server. This requires that the **krb.conf** file is first created on the primary authentication server and is copied to the control workstation. For example:

```
XYZ.COM
XYZ.COM kprimary.xyz.com  admin server
XYZ.COM spcw.xyz.com
```

CWS-Client

Required - control workstation is not listed in configuration file. This requires that the **krb.conf** file is first created on the primary authentication server and is copied to the control workstation. For example:

```
XYZ.COM
XYZ.COM kprimary.xyz.com  admin server
XYZ.COM ksecondary.xyz.com
```

CWS-AFS	None - file is derived automatically from AFS configuration files. AFS uses the configuration files /**usr**/**vice**/**etc**/**CellServDb** and /**usr**/**vice**/**etc**/**ThisCell**.

Refer to the file format man pages **krb.conf** in the *Commands and Technical Reference* for more information and examples.

Selecting the Authentication Options to Install

Selecting SP options for installation depends on where the authentication server is located. SP authentication code is distributed in two separately installable options. **ssp.authent** contains only parts required on a system that is to be a authentication server. The remainder of Kerberos and authenticated services is distributed in **ssp.clients**.

You must install **ssp.clients** on the SP control workstation, even in the case where you intend to use AFS or MIT Kerberos Version 4 authentication. You should also install it on any other RS/6000 workstation that you plan to be a authentication server or from which you plan to perform system management tasks using System Monitor commands, AIX remote commands, or the **sysctl** remote command execution facility. Workstations using MIT Kerberos Version 4 authentication do not require **ssp.clients** if they are not using SP system management tools. All SP nodes will have **ssp.clients** installed.

You must install **ssp.authent** on the control workstation, if it is to be a authentication server, either primary or secondary. You can also install **ssp.authent** on any other RS/6000 workstation that you plan to be an authentication server. You will not be able to install it if the system already has an MIT Kerberos Version 4 implementation installed. If you want to install the SP authentication facilities, you must first remove the other Kerberos implementation.

Checklists for Authentication Planning

Using SP or MIT Kerberos 4 Authentication Servers

Decide what authentication realms your network will have.

For each realm:

1. Decide on the name of the realm.
2. Determine the administrative principal you will use for installing the SP authentication on the control workstation and other RS/6000 workstations. Either this administrative user or another that you define later must be assigned UID 0 in order to perform SP installation tasks that require both root privileges and Kerberos administrative authority.
3. Decide which system is the primary server.

   If it will be an SP authentication server:

   - Make sure no other Kerberos system is installed.

   Otherwise, it must be an existing (primary) Kerberos server.

   - Make sure the authentication server is installed and running.
   - Make sure the kshell service (rsh/rcp daemon) is available.

- Make sure that network interfaces and name resolution are set up to allow it to access the primary server.

4. Decide which systems will be secondary servers.
5. Make sure that network interfaces and name resolution are set up to allow it to access the primary server and the SP system.

   If any

   - Decide how you will order the entries in the **/etc/krb.conf** configuration file.
   - Decide how often you want to automatically propagate the authentication database from the primary server to the secondaries.
   - For each secondary server
     - Make sure no other Kerberos system is installed.
     - Make sure that network interfaces and name resolution are set up to allow it to access the primary server.
6. Identify any other RS/6000 systems that will be clients.

   If any other RS/6000 systems will be clients:

   - Decide how you will order the entries in the **/etc/krb.conf** configuration file.
   - Make sure that network interfaces and name resolution are set up to allow it to access the primary server and the SP system.

Using AFS Authentication Servers

If you choose to use AFS authentication services with your SP system, take into account the following unique considerations:

1. Any RS/6000 workstation on which you are installing the SP authentication support, including the control workstation, must have already been set up as either an AFS client system or as an AFS server.
2. If the AFS configuration files, **CellServDB** and **ThisCell**, are installed in a directory other than **/usr/vice/etc**, or if the **kas** program is not installed in **/usr/afsws/etc** or **/usr/afs/etc**, you must create symbolic links at the directory level so the SP **setup_authent** program can find these files.
3. You must have a user defined with the AFS **admin** attribute that can be used during SP authentication setup and installation. This user will also be the default user defined with administrative authority in the System Monitor's access control list file. You can add other administrators later.
4. In order for users to use the authentication service on the SP nodes, you must also install AFS client services on those systems. See the instructions for AFS client customization of the SP nodes in the sample file **afsclient.cust** in the *IBM RS/6000 SP Systems: Administration Guide*
5. The authentication server (**kaserver**) in AFS Version 3.4 for AIX 4.1 accepts Kerberos Version 4 protocol requests using the well-defined **udp** port assigned to the **kerberos** service. Whereas AIX 3.2.5 did not define a Kerberos service in the **/etc/services** file distributed with the base operating system, AIX 4.1 assigned the Kerberos Version 5 port number 88 to work with DCE. PSSP authentication services based on MIT Kerberos Version 4, uses a default port number of 750. The PSSP commands use the service name **kerberos4** to avoid this conflict with the Kerberos 5 service name. For PSSP authentication

commands to communicate with an AFS 3.4 **kaserver** on AIX 4.1, you must do one of the following steps:

a. Stop the **kaserver**, redefine the **udp** port number for the **kerberos** service to 750 on the AFS Authentication server system, then restart the **kaserver**.

b. Add a statement to /**etc**/**services** that defines the **udp** port for the **kerberos4** service as 88 on the SP control workstation and on any other independent workstation that will be a client system for PSSP authenticated services.

Authentication Worksheets

Complete Worksheet 17, Table 49 on page 244 with your authentication information. If you use PSSP authentication servers, fill out Table 50 on page 245. If you use an AFS authentication server, fill out Table 51 on page 245.

Be aware that these worksheets ask you for passwords. Keep these worksheets, when filled out, in a secure location.

Chapter 7. Planning to Record and Diagnose System Problems

Configuring the AIX Error Log

The AIX Error Log facility is configured by default to be 1 MB in size. When the log fills up, it wraps around and overwrites existing entries. In this release, the SP software is utilizing the AIX Error Log more frequently. Therefore, you should increase the size to at least 4MB. You can do this once for all nodes with the **dsh** command after the nodes are installed.

```
dsh -a /usr/lib/errdemon -s 4096000
```

Configuring the BSD Syslog

Control Workstation

The SP installation configures the Berkeley Software Distribution (BSD) syslog subsystem on the control workstation only to write all syslog messages for its daemons to the **daemon.notice** facility. (All kernel error messages are logged via the AIX Error Log Facility.) If the control workstation already has the **daemon.notice** facility configured, it does not change the previous configuration.

SP Nodes

The BSD syslog facility is not configured on the SP nodes when it is installed. By default, AIX does not configure the BSD syslog. The configuration file for BSD syslog is /**etc**/**syslog.conf**. Configure the syslog if you want entries made there. Note also that any SP error logs are also written to the AIX Error Log and usually contain more information about probable cause and possible recovery or diagnostic actions. In AIX, the predominant error logging facility is the AIX error log and only code that was ported from 'other sources' contains the calls to syslog and logger. The AIX kernel does not use syslog for error logging.

The File Collections facilities can be used to manage the /**etc**/**syslog.conf** file if all the nodes have the same configuration file. Administrators should be aware that the amount of information that syslog collects may consume network resources on an SP system if they are forwarded to a single node. Additionally, the SP multiplexes the /**dev**/**console** tty cables onto a single cable per frame. If /**dev**/**console** is used for syslog messages performance problems may occur. If you want syslog messages, IBM recommends that they be logged on a per-node basis, and that you use tools such as **dsh** and **sysctl** to view and manage them.

See the *Diagnosis and Message Guide* for more information about error logging.

© Copyright IBM Corp. 1997

System Error Logs

The following error logs are valid for PSSP 2.3 with AIX 4.2.1.

SP Specific Logs

SP creates the following logs during normal operations.

/var/adm/SPlogs/cs/cstart.*timestamp*.**pid**
/var/adm/SPlogs/cs/cshut.*timestamp*.**pid**
/var/adm/SPlogs/sysman/*node***console.log**
/var/adm/SPlogs/sysman/*node***config.log**
/var/adm/SPlogs/sysman/*node***firstboot.log**
/var/adm/SPlogs/spacs/spacs.log
/var/adm/SPlogs/css/rc.switch.log
/var/adm/SPlogs/css/daemon.stderr
/var/adm/SPlogs/css/daemon.stdout
/var/adm/SPlogs/css/fs_daemon_print.file
/var/adm/SPlogs/css/worm.trace
/var/adm/SPlogs/css/flt
/var/adm/SPlogs/css/router.log
/var/adm/SPlogs/css/toplogy.data
/var/adm/SPlogs/css/out.top
/var/adm/SPlogs/css/dtbx.trace
/var/adm/SPlogs/spmon/nc/nc.*frameid.slotid*
/var/adm/SPlogs/spmon/hmlogfile.*nnn*
/var/adm/SPlogs/spmon/hm_frame_packet_dump
/var/adm/SPlogs/spmon/hm_response_dump
/var/adm/SPlogs/spmon/hm_sldata_dump
/var/adm/SPlogs/spmon/splogd.state_changes.*timestamp*
/var/adm/SPlogs/SPdaemon.log
/var/adm/SPlogs/sdr/sdrlog.*nnn*
/var/adm/SPlogs/sdr/SDR_config.log
/var/adm/SPlogs/sysctl/sysctld.log
/var/adm/SPlogs/kerberos/admin_server.syslog
/var/adm/SPlogs/kerberos/kerberos.log
/var/adm/SPlogs/kerberos/kerberos.slave_log
/var/adm/SPlogs/kerberos/kpropd.log
/var/adm/SPlogs/pman/pmand.log
/var/adm/SPlogs/pman/pmand.*partition name*.**log**
/var/adm/SPlogs/pman/pmand.log
/var/adm/SPlogs/pman/pmand.*partition name*.**log**
/var/adm/SPlogs/auto/auto.log
/var/adm/SPlogs/filec/logs/*
/var/adm/SPlogs/spmgr/*
/var/tmp/sp.configd.log
/var/ha/log/hags*
/var/ha/log/em*
/var/ha/log/hats*
/tmp/jmd_out
/tmp/jmd_err

Finding and Using Error Messages

Most error messages generated by the SP are listed and explained in the *Diagnosis and Message Guide* The second section of that book lists the messages in numerical order. Each message should have a part labeled “User Response” that describes the actions, if any, that you should take when you encounter the message. If the information in a message does not help resolve the problem, you should have users follow a pre-defined path for resolving the problem.

Getting Help from IBM

If you require help from IBM in resolving an SP system problem, you can get assistance by calling IBM Support at the following numbers. Before you call, be sure you have the following information:

1. Your access code (customer number). This number was entered on Worksheet 4, “SP Planning” in Table 36 on page 225.
2. The SP product number, for example:
   - For a problem with PSSP 2.3, use product number: 5765–529
   - For a problem with LoadLeveler 1.3, use product number: 5765–145

   Similarly, each product has it own order number that will speed the correct routing of your call.
3. The name and version of the operating system you are using.
4. A telephone number where you can be reached.

The person with whom you speak will ask for the above information and then give you a time period during which an IBM SP representative will call you back.

In the United States:

The number for IBM software support is **1-800-237-5511**.
The number for IBM AIX support is **1-800–CALL-AIX**.
The number for IBM hardware support is **1-800-IBM-SERV**.

Outside the United States, contact your local IBM Service Center.

Sending Problem Data to IBM

You may be asked to produce a system dump and send it to the IBM support office. Refer to *IBM RS/6000 SP Systems: Administration Guide* for instructions on how to produce this information.

Customers Within the United States

To send the data to IBM, label the tape or diskette with the problem number and mail it to:

IBM RS/6000 Scalable POWERparallel Systems
Dept. 39KA, M/S P961, Bldg. 415
522 South Road
Poughkeepsie, N.Y. 12601-5400

ATTN: APAR Processing

Customers Outside the United States

Your local IBM Service Center can provide you with the address to use.

Opening a Problem Management Record (PMR)

A PMR is an online software record used to keep track of software problems reported by customers.

Follow your local support/service procedures for opening a PMR.

Note: To aid in quick problem determination and resolution, it will be very useful to have the SDR data specific to the problem included in the PMR. You can obtain the SDR data using the **splstdata** command. Use the appropriate command flag to view data relevant to the problem. For example:

splstdata -e Lists environment choices

splstdata -n Lists node information

splstdata -s Lists switch information

For more information on **splstdata**, refer to *IBM RS/6000 SP Systems: Command and Technical Reference*

IBM Tools for Problem Resolution

IBM offers several tools to help you with efficient problem resolution. Although they are not part of SP, they work with it.

Service Director/6000

Service Director/6000 analyzes AIX error logs and runs diagnostics against those error logs. If a Service Request Number is created, a record of that is created, the product automatically sends a message (call home) to IBM and a Problem Management Report (PMR) is opened. You can define which systems have the Service Director/6000 clients and servers and the level of error log forwarding or network access.

NetView for AIX

NetView for AIX manages multi-vendor networks by polling the base AIX SNMP daemon agents to gather information for display and action by network control desk. It also performs automatic discovery of the network (creation and maintaining topological network maps); performance management for monitoring network statistics and displaying critical network resource status and statistical summaries for analysis and corrective actions; and fault management for verifying the integrity of the network, utilizing thresholding and filtering algorithms for easier alert notification, and defining and implementing corrective actions to SNMP traps.

Note that NetView for AIX is not supported on the control workstation.

EMEA Service Planning Applications

The EMEA Service Planning offering, available directly from EMEA, runs a set of application programs managed by **cron** and the AIX Error Notification Facility to collect data from the ErrorLog, Syslog, /**var**/**adm**, and /**tmp** from individual nodes. The data is stored at the control workstation. The application, if required by events in the logs, calls the support center and opens a PMR.

Chapter 8. Planning for PSSP-Related LPPs

This chapter briefly discusses planning information for PSSP-related Licensed Program Products (LPPs) with regard to PSSP. For detailed information on the individual LPPs, refer to the “Related Publications” on page xi.

Planning for IBM Virtual Shared Disk and IBM Recoverable Virtual Shared Disk

An IBM Virtual Shared Disk (VSD) lets application programs executing on different nodes of a cluster access a raw logical volume as if it were local at each of the nodes. In actuality, the logical volume is located at *one* of the nodes called a *server* node.

The IBM Recoverable Virtual Shared Disk (RVSD) program product lets you configure nodes as primary and secondary VSD server nodes. RVSD provides transparent switchover to a secondary server node when the primary server node for a set of virtual shared disks fails.

You should plan how you are going to use VSD and RVSD before you install the hardware. Each VSD cluster must be in the same system partition. You can, however, have separate VSDs in separate system partitions, but they cannot communicate directly with each other. See Chapter 5, “Planning SP System Partitions” on page 101 for system partition planning information.

RVSDs require twin-tailed disk storage which must be installed before you define or use the RVSDs.

Planning for IBM Virtual Shared Disk Communications

When you define VSDs you specify the SP switch or other connection method. See the *Administration Guide* for detailed VSD planning information.

In the design of Logical Volume Manager (LVM), each logical partition maps to one physical partition (PP) and each physical partition maps to a number of disk sectors. The design of LVM limits the number of physical partitions that LVM can track per disk to 1016. In most cases, not all the 1016 tracking partitions are used by a disk. The default size of each physical partition during a **mkvg** command is 4MB, which implies that individual disks up to 4GB can be included into a volume group.

If a disk larger than 4GB is added to a volume group (based on usage of the default 4MB size for the physical partition), the disk addition fails. The warning message provided will be: *The physical partition size of <number A> requires the creation of <number B> partitions for hdiskX.*.

The system limitation is 1016 physical partitions per disk. Specify a larger physical partition size in order to create a volume group on this disk. Note that the size of the partition determines the granularity by which logical volumes (and file systems) could be increased in size in a given volume group definition. Moreover, this setting could not be overridden once a volume group is defined. If you intend to dedicate

© Copyright IBM Corp. 1997

DASD for a database with large tables on external DASD, you should consider using a large partition size.

There are two instances where this limitation is enforced:

1. You try to use **mkvg** to create a volume group and the number of physical partitions on a disk in the volume group exceeds 1016. The workaround to this limitation is to select from the physical partition size ranges of: 1, 2, (4), 8, 16, 32, 64, 128, 256 Megabytes and use the **mkvg -s** option.
2. The disk that violates the 1016 limitation attempts to join a pre-existing volume group with the **extendvg** command.

You can recreate the volume group with a larger partition size allowing the new disk to work or create a stand-alone volume group consisting of a larger physical size for the new disk. If the install code detects that the rootvg drive is larger than 4GB, it will change the **mkvg -s** value until the entire disk capacity can be mapped to the available 1016 tracks. This install change also implies that all other disks added to rootvg, regardless of size, will also be defined at that physical partition size. For RAID systems, the /dev/hdiskX name used by LVM in AIX may really consist of many non-4GB disks. In this case, the 1016 requirement still exists. LVM is unaware of the size of the individual disks that may really make up /dev/hdiskX. LVM bases the 1016 limitation on the AIX recognized size of /dev/hdiskX, and not the real physical disks that make up /dev/hdiskX.

In some instances, you will experience a problem adding a new disk to an existing volume group or in creating a new volume group. The warning message provided by LVM will be: *Not enough descriptor area space left in this volume group.*

Either try adding a smaller PV or use another volume group. On every disk in a volume group, there exists an area called the volume group descriptor area (VGDA). This space allows you to take a volume group to another AIX system and importvg the volume group into the AIX system. The VGDA contains the names of disks that make up the volume group, their physical sizes, partition mapping, logical volumes that exist in the volume group, and other pertinent LVM management information. When you create a volume group, the mkvg command defaults to allowing the new volume group to have a maximum of 32 disks in a volume group. However, as bigger disks have become more prevalent, this 32 disk limit is usually not achieved because the space in the VGDA is used up faster, as it accounts for the capacity on the bigger disks. This maximum VGDA space, for 32 disks, is a fixed size which is part of the LVM design. Large disks require more management mapping space in the VGDA, causing the number and size of available disks to be added to the existing volume group to shrink. When a disk is added to a volume group, not only does the new disk get a copy of the updated VGDA, but all existing drives in the volume group must be able to accept the new, updated VGDA. The exception to this description of the maximum VGDA is rootvg. In order to provide AIX users more free disk space, when rootvg is created, mkvg does not use the maximum limit of 32 disks that are allowed into a volume group. Instead in AIX 3.2, the number of disks picked in the install menu of AIX is used as the reference number by mkvg -d during the creation of rootvg. For AIX 4.1, this -d number is 7 for one disk and one more for each additional disk picked. For example, if two disks are picked, the number is 8 and if three disks are picked, the number is 9, and so on. This limit does not prohibit you from adding more disks to rootvg during post-install. The amount of free space left in a VGDA, and the number size of the disks added to a volume group, depends on the size and number of disks already defined for a volume group. If you require more VGDA space in the rootvg, then

use the **mksysb** and **migratepv** commands to reconstruct and reorganize your rootvg (the only way to change the -d limitation is recreation of a volume group). Note: It is recommended that you do not place user data onto rootvg disks. This separation provides an extra degree of system integrity.

The logical volume control block (LVCB) is the first 512 bytes of a logical volume. This area holds important information such as the creation date of the logical volume, information about mirrored copies, and possible mount points in the journaled filesystem (JFS). Certain LVM commands are required to update the LVCB, as part of the algorithms in LVM. The old LVCB is read and analyzed to see if it is a valid. If the information is valid LVCB information, the LVCB is updated. If the information is not valid, the LVCB update is not performed and the following warning message is issued: *Warning, cannot write lv control block data*

Most of the time, this is a result of database programs accessing raw logical volumes (and bypassing the JFS) as storage media. When this occurs, the information for the database is literally written over the LVCB. Although this may seem fatal, it is not the case. Once the LVCB is overwritten, you can still do the following:

- Expand a logical volume
- Create mirrored copies of the logical volume
- Remove the logical volume
- Create a journaled filesystem to mount the logical volume.

There are limitations to deleting LVCBs. The logical volumes with deleted LVCB's face possible, incomplete importation into other AIX systems. During an importvg, the LVM command scans the LVCB's of all defined logical volumes in a volume group for information concerning the logical volumes. If the LVCB is deleted, the imported volume group will still define the logical volume to the new AIX system, which, is accessing this volume group, and you can still access the raw logical volume. However, any journaled file system information is lost and the associated mount point will not be imported into the new AIX system. You must create new mount points and the availability of previous data stored in the filesystem is not assured. Also, during this import of logical volume with an erased LVCB, some non-jfs information concerning the logical volume, which is displayed by the **lslv** command, cannot be found. When this occurs, the system uses default logical volume information to populate the logical volume's ODM information. Therefore, some output from **lslv** will be inconsistent with the real logical volume. If any logical volume copies still exist on the original disks, the information will not be correctly reflected in the ODM database. Use **rmlvcopy** and **mklvcopy** commands to rebuild any logical volume copies and synchronize the ODM.

Planning for Parallel ESSL

Parallel ESSL is a scalable mathematical subroutine library that supports parallel processing applications on IBM RS/6000 SP and on clusters of IBM RS/6000 workstations. Parallel ESSL supports the Single Program Multiple Data (SPMD) programming model and provides subroutines in six major areas of mathematical computations. It is tuned for optimal performance on the SP consisting of POWER2 nodes with the High Performance Switch, High Performance Switch-LC8, SP Switch, or SP Switch-8.

Parallel ESSL provides subroutines in the following computational areas:

- Level 2 PBLAS
- Level 3 PBLAS
- Linear Algebraic Equations
- Eigensystem Analysis and Singular Value Analysis
- Fourier Transforms
- Random Number Generation

For Parallel ESSL for AIX Version 4: The subroutines run under the AIX operating system and can be called from application programs written in Fortran, C, C++, and High Performance Fortran (HPF). On the SP, Parallel System Support Programs (PSSP) is also required.

For communication, Parallel ESSL includes the Basic Linear Algebra Communications Subprograms (BLACS), which use the Parallel Environment (PE) Message Passing Interface (MPI). Communications using the User Space (US) require either the High Performance Switch, High Performance Switch-LC8, SP Switch, or SP Switch-8. Communications using the Internet Protocol (IP) may use Ethernet, Token Ring, FDDI, High Performance Switch, High Performance Switch-LC8, SP Switch, or SP Switch-8. For computations, Parallel ESSL uses the ESSL/6000 subroutines. The Parallel ESSL package includes the IBM AIX ESSL/6000 product.

To order the IBM Parallel ESSL for AIX Version 4, specify:

- Program number 5765-422 for all geographies, except EMEA.
- Program number 5765-B50 for EMEA.

For Parallel ESSL for AIX Version 3.2.5: The subroutines run under the AIX operating system and can be called from application programs written in Fortran, C, and C++. On the SP, Parallel System Support Programs (PSSP) is also required.

For communication, Parallel ESSL includes the BLACS, which use the Parallel Environment (PE) Message Passing Library (MPL). Communications using the User Space (US) require the High Performance Switch. Communications using the Internet Protocol (IP) may use Ethernet, Token Ring, FDDI, or High Performance Switch. For computations, Parallel ESSL uses the ESSL/6000 subroutines. The Parallel ESSL package includes the IBM AIX ESSL/6000 product.

To order IBM Parallel ESSL for AIX Version 3.2.5, specify program number 5765-645.

Planning for Parallel Environment

The IBM Parallel Environment for AIX (PE) program product is designed to help you develop parallel programs and execute them on the IBM RS/6000 SP System or a networked cluster of RS/6000 processors. The main PE components are:

- **Message Passing and Collective Communications Application Programming Interface (API) Subroutine Library**, which help application developers parallelize their code.
- **Parallel Operating Environment (POE)**, that provides the ability to create and execute parallel application programs.
- **Parallel Debuggers**, to assist in debugging parallel applications.

- **Visualization Tool (VT)**, a trace generation and display system to visualize performance characteristics of your program and system.

You should be aware that parts of the PE installation steps may interact with or be affected by PSSP component installations, particularly **ssp.css** and **ssp.clients**. See the *IBM Parallel Environment for AIX: Installation, (GC28-1980)* for details on planning and installing Parallel Environment, particularly if you are interested in the following:

- Installing PE on a Control Workstation.
- Installing PE to run off the rack, with the **ssp.clients** fileset.
- Installing CSS after POE has been installed.

Planning for Performance Monitor (PTPE)

Performance Toolbox Parallel Extensions for AIX (PTPE) is a performance monitor for the SP system. When installed on your SP, it allows easy access to performance information about both SP hardware and software (LPPs). This information is available as both run-time (current) and archived (historical) data that you can analyze, manipulate, print, and import to a database, should you so desire.

PTPE builds on the capabilities of Performance Toolbox for AIX, adding monitoring functions specific to the SP System. You can use PTPE to examine the current performance state of any node in your SP system. You decide what performance information to display, and view or print it from any node in the system.

PTPE collects and archives performance statistics for each SP node. It calculates averages for common performance information for all SP nodes. All PTPE data is available for display to help you evaluate performance of the SP at both the node and system level.

The translation table consumes 13,200,012 bytes (roughly 12.6 MB). As a result, the filesystem containing the **/var/adm/ptpe** directory needs to have at least 13 MB available space when PTPE is installed and started for the first time. If this space is not available, PTPE will not start. Once PTPE has successfully started, the complete table space is reserved in the directory even if 50,000 statistics aren't available (so PTPE can assimilate new statistics if they become available at a later time).

Administrators should set up a logical volume, containing at least 4 LP's (16 MB) on each node where PTPE is to run. Create a new filesystem for the logical volume, and mount the filesystem over the **/var/adm/ptpe** directory. This will ensure that PTPE has enough DASD to start.

Administrators also need to become part of the **perfmon** user group, and thoughtfully lay out the monitoring hierarchy.

For information on PTPE, refer to *IBM Performance Toolbox Parallel Extensions for AIX Guide and Reference* SC23-3997.

Planning for LoadLeveler

LoadLeveler is an IBM software product that lets you build, submit, and process both serial and parallel jobs on your RS/6000 workstation, Silicon Graphics systems, Sun SPARCstation systems, and Hewlett-Packard systems. LoadLeveler is recommended, but not required, for batch processing on the SP system, and is included with the SP.

LoadLeveler provides workload management capabilities on the RS/6000 SP and other heterogeneous workstations running UNIX operating systems. (RS/6000, Sun, HP, and SGI workstations) It allows you to view individual nodes as a single computational resource.

LoadLeveler is an integral piece of the total System Management solution on the RS/6000 SP. LoadLeveler can take advantage of features provided in the Parallel Systems Support Programs (PSSP), such as Event Management and Performance Monitoring. LoadLeveler will also interoperate with other schedulers to support batch job processing on other hardware platforms. These schedulers can include Network Queueing System (NQS) and the IBM Network Queuing System/MVS (NQS/MVS).

Compatibility

The current release of LoadLeveler for AIX is 1.3. It is available for AIX 4.1 and above. LoadLeveler 1.3 for AIX allows OEM platforms to participate in the LoadLeveler 1.3 cluster as submit only nodes at this time. Submit only binaries for Sun, HP, and SGI will be provided at LoadLeveler 1.3 general availability.

LoadLeveler 1.2.x and LoadLeveler 1.3 are not compatible. There have been changes to the protocol used between daemons and changes in the format of the job_queue. You must upgrade all LoadLeveler nodes to LoadLeveler 1.3 or maintain two separate LoadLeveler clusters, one for LoadLeveler 1.3 and one for LoadLeveler 1.2.x.

In order to migrate from LoadLeveler 1.2.x to LoadLeveler 1.3, you must drain the startd and schedd daemons in the cluster, shutdown LoadLeveler, install LoadLeveler 1.3, convert the job_queue file, and then restart LoadLeveler. For detailed instructions, refer the README file distributed with LoadLeveler 1.3.

Planning for a highly available LoadLeveler cluster

LoadLeveler provides features within the product for automatic recovery in the event of failure of the central manager in the batch configuration and of the domain nameserver running ISS in the interactive configuration. Additionally, the availability of individual compute nodes and filesystems in the LoadLeveler cluster can be enhanced by using the High Availability Cluster Multi-Processing (HACMP) product as well as the High Availability Control Workstation (HACWS) optional feature of the PSSP. For details on how to configure LoadLeveler for High Availability, refer to the ITSO Redbook titled "Implementing High Availability on the RS/6000 SP" (SG24-4742-00).

Performance Monitoring of LoadLeveler

LoadLeveler can utilize the Performance Toolbox Parallel Extensions (PTPE) optional feature of PSSP 2.2 to collect performance information on scheduling and executing nodes.

In general, planning the LoadLeveler installation for batch processing requires making the following configuration decisions. You must decide what is suitable to your environment.

- Select a node to serve as central manager and one or more alternate central managers. The central manager can be any node in the cluster. In selecting one, consider the current workload and network access. Note that no new work can be performed while the central manager is down, and no queries can be made about any of the running jobs without the central manager.
- Determine which nodes will be scheduling nodes, execution nodes, submit-only nodes, and public submit nodes.
- Determine where to locate home and local directories. For maximum performance, keep the log, spool, and execute directories in a local file system.
- Determine if LoadLeveler daemons should communicate over the switch. It may not be desirable in your environment to have the daemons communicate over the switch. You need to evaluate the network traffic in your system to determine if LoadLeveler IP communications over the switch is desirable.
- Determine if HACMP is necessary to provide failover capability of individual compute nodes or the switch. If using LoadLeveler in conjunction with HACMP, decide which nodes will be grouped together for backup purposes. (HACMP can only provide capability for up to eight nodes.) Each backup node needs to know which set of seven nodes it will back up. This relationship is defined in the form of HACMP resource groups.
- Determine if the SP workload includes parallel batch jobs. If you want to use the High Performance switch for parallel jobs in user mode, or if you want the Resource Manager to coordinate machine usage between interactive and batch jobs in the SP system you must configure the Resource Manager.

Other planning considerations:

1. LoadLeveler requires a **common name space** for the entire LoadLeveler cluster. To run jobs on any machine in the LoadLeveler cluster, you must have the same uid (system ID number for a user) and gid (system ID number for a group) on every machine in the cluster. If you do not have a user ID on one machine, your jobs will not run on that machine.
2. LoadLeveler works in conjunction with the NFS or AFS filesystems. Allowing users to share filesystems to obtain a single, network-wide image, is one way to make managing LoadLeveler easier.
3. Some nodes in the LoadLeveler cluster might have special software installed that users might need to run their jobs successfully. You should configure LoadLeveler to distinguish those nodes from other nodes using, for example, job classes.

If you plan to use LoadLeveler Interactive Session Support (ISS), you must decide:

- Which node will act as the ISS domain name server?
- Which node will act as the backup ISS domain name server?
- What metric will be used for each pool of servers?

Each pool can be configured to use a different metric to determine how sessions are distributed to individual servers. The available options are: ROUNDROBIN,

CUSTOM, and LOADLEVELER. Refer to "Using and Administering LoadLeveler" (SC23-3989) for complete details on the applicability of each type of metric.

Planning for PVMe

The IBM PVMe for AIX program product is an implementation of the application program interface (API) defined by the public domain package PVM (Parallel Virtual Machine). The IBM PVMe for AIX program product now provides source and object compatibility with PVM 3.3.7, which is developed at Oak Ridge National Laboratory.

Note: PVMe versions are available for PSSP 2.2 and 2.1. However, **PVMe will not run with PSSP 2.3.** Also, PVMe is being withdrawn after Y.E. 1997

Planning for Parallel I/O File System

The Parallel I/O File System (PIOFS) is designed for serial or parallel applications that require large temporary files and high I/O bandwidth. PIOFS provides a global namespace and lets you create files as large as 128 Terabytes that span multiple server nodes.

Planning for NetTape

IBM provides two network tape products for AIX:

- IBM Network Tape Access and Control System for AIX (NetTape), program number 5765-637
- IBM Tape Library Connection (TLC), program number 5765-643

NetTape is a program that provides consolidated tape operations and transparent access to a wide variety of remote tape devices on a network of AIX workstations and supports both RS/6000 workstations and IBM RS/6000 SP systems. NetTAPE allows the user to share tape devices between multiple AIX applications, including, ADSM for AIX Version 2.1 servers.

The optional MVS Tape Server feature of the Client Input Output/Sockets (CLIO/S) program (FC 5648-129) provides MVS tape support. NetTAPE and CLIO/S can be installed on the same AIX system, providing complimentary functions.

You must install the NetTAPE product on each node where NetTAPE will be used. The size of the installp image is about 23 MB.

The Tape Library Connection (TLC) builds on NetTape, adding support for robotic tape library devices. These devices include the IBM 3494 and IBM 3495 Tape Library Dataservers and StorageTek** tape library devices. NetTape is a prerequisite product for the Tape Library Connection.

The NetTAPE TLC product only needs to be installed on the node where the library server is running. The size of the installp image is about 6 MB.

Planning for IBM Client Input Output/Sockets (CLIO/S)

Client Input Output/Sockets provides high-speed transparent data transfer and tape access between MVS/ESA systems and AIX systems or between AIX systems. It provides a set of user commands and application programming interfaces that run on either MVS or AIX. CLIO/S is compatible with and complimentary to NetTape when comprehensive tape access across both AIX and MVS is required.

If you currently have an MVS system, and if you plan to move large amounts of data (many gigabytes) between the MVS system and the SP, you may need CLIO/S. CLIO/S provides high-speed, low-overhead transfers over fast channel-to-channel connections. These channel to channel connections **require** the IBM ESCON Channel Adapter or the IBM Block Multiplexer Channel Adapter cards (and associated microcode) in the SP.

Planning for CLIO/S requires participation by both MVS and SP system planners. The main issues to consider in the planning stage include:

- Look at how frequently your data base is either loaded, backed up, or restored.
- Look at the current size and projected future size of your data base.
- CLIO/S data transfer is accomplished by moving MVS data files directly into AIX, bypassing the TCP/IP stacks in the MVS system.

  Some workloads may be distributed across several nodes, doing so requires individual channel adapter cards for each node connected directly to the MVS system.

  Other nodes may be connected indirectly to MVS. This is done by routing node to node connections through the SP switch. In this case, the SP node that is directly attached, receives data from the MVS system. The data is then routed indirectly from MVS to other SP nodes via the SP switch.

  Some systems may require intermediate data storage between the MVS and AIX systems while other systems will allow direct data transfer.

Planning for General Parallel File System (GPFS)

Although you can modify your GPFS configuration after it has been set, a little consideration before installation will reward you with a smoother and more useful file system.

Hardware and Operating Environment Considerations:

- You must have IBM Virtual Shared Disk and Recoverable Virtual Shared Disk operating on your system.
- If you are using twin-tailed disks, you must select an alternate node as a backup VSD server.
- Do you have sufficient disks and adapters to provide the needed storage capacity and required I/O time?

File Size Considerations:

- How much data will be stored and how large will your files become?
- How often will the files be accessed?

- Do your applications handle large amounts of data in single read/write operations or is the opposite true?
- How many files do you anticipate handling in the future?

Data Recovery Considerations:

- Node Failure:
  1. You must enable the High Availability Services option (mandatory for GPFS).
  2. GPFS automatically reconfigures itself to continue operations without the failing node.
- VSD Server and Disk Failure: Your recovery strategy depends on how you answer the following question: Is your primary concern loss of data, loss of data access, or do you need protection from both server and disk failure.
  1. If data loss is your concern, a RAID device may be the best solution.
  2. If data access is your concern, twin-tailed disks could be your solution.
  3. If both data loss and access is a potential problem, first consider mirroring at the logical volume manager for data recovery. If mirroring does not fit your system needs, another option is *replication*, which automatically creates and maintains copies of all file information.
- Connectivity Failure Considerations: Adapter failures are treated as a node failure.

Details on implementing these strategies and other methods can be found in the IBM publication, General Parallel File Systems for AIX, Installation and Administration.

Customizing Your System

© Copyright IBM Corp. 1997

Chapter 9. Planning for Expanding or Modifying Your System

As your organization's processing needs and resources change, you may find that your current system setup no longer meets your needs. You may want to add/remove/upgrade nodes, frames, or switches; or your changing needs may require you to perform other hardware or software modifications to your system. Planning ahead when you first configure your system can make future changes easier.

This chapter discusses the most common topics you should consider prior to expanding or modifying your system. In addition, several sample scenarios illustrate the most common ways of expanding your system.

Chapter 4 of the *Installation and Migration Guide* "Reconfiguring your System", discusses how to add, delete, or replace hardware in your system. Prior to expanding or modifying your system in any way, you should read this chapter to understand how to plan for the change. Careful planning will help ensure your system is back up and running as soon as possible.

Planning Vol. 1, Hardware and Physical Environment discusses site planning considerations such as planning for additional floor space or power concerns. Be sure to consult that book prior to expanding or modifying your system.

Note: There are many different ways that you can configure your system and each configuration requires you to plan for system setup. IBM tests and supports the most common configurations. Keep in mind that the more complex your specific configuration, the less the chance that IBM has tested that configuration. If you decide to expand or modify your configuration in a manner that is not addressed in this chapter or book, you should consult with your IBM representative prior to modifying your setup.

Questions to Answer Before Expanding/Modifying/Ordering Your System

This section poses some of the most common questions you should consider prior to ordering or changing your system. These topics are illustrated in the scenarios presented later in this chapter.

To reduce the rhetoric which follows, we limit this discussion to an expansion of an existing system. Further, we focus our attention on the 3-frame system pictured below. This system has frames numbered 1, 2 and 4, and has several unused node slots. Each of Frames 1 and 4 has a switch, but Frame 2 does not. Frame 2 is an *expansion frame* whose nodes use the switch in Frame 1.

© Copyright IBM Corp. 1997

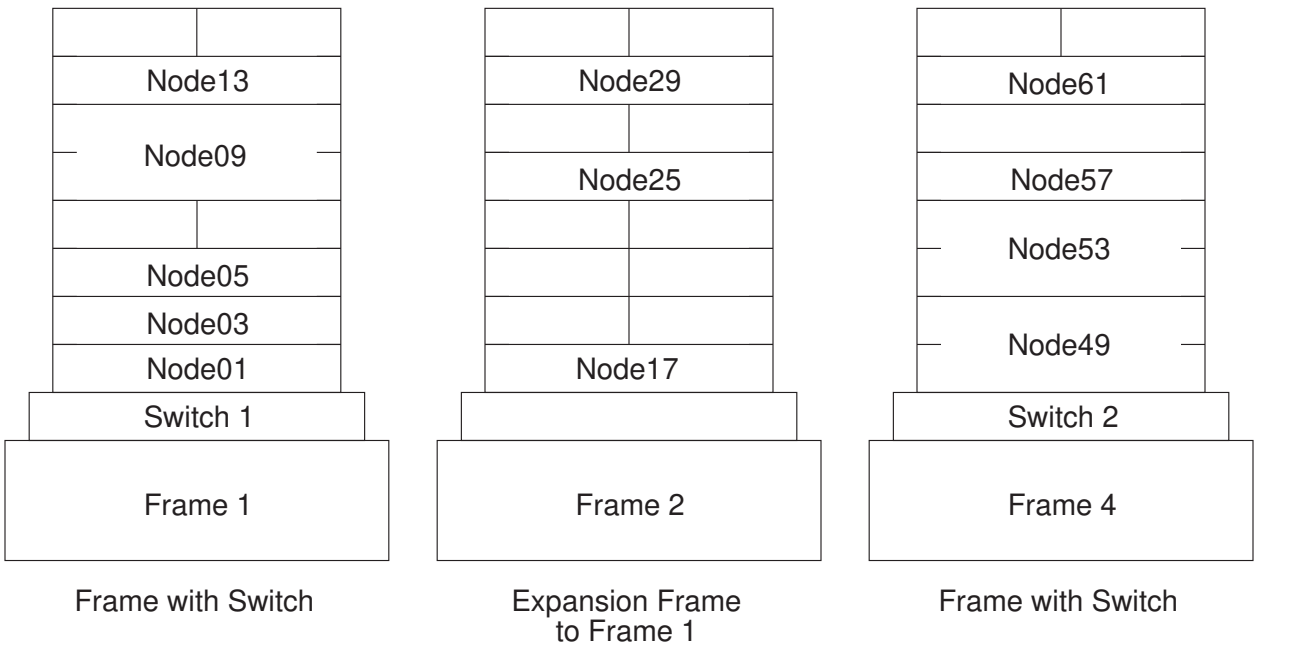

Figure 34. Sample System: 3-frame, 1-switch

How large do I want my system to grow?

Prior to expanding your system, you should plan ahead for how large you want your system to eventually grow. Planning will encourage you to leave unused frame numbers for future expansion, and will help you avoid having to move nodes between frames. Our Sample System may grow in any of the following ways:

- Nodes - insert nodes in empty slots;
- Frame - add any of Frames 3, 5, 6, ...
- Switch - install a switch in Frame 2
- switched IP router

How do I reduce system down time?

Expanding a system can require that the system be shut down for an extended period of time. When adding a frame or switch to the system, there is often a great deal of cable wiring required. If you know that you want your system to grow in the future by adding nodes, frames, or switches, you may want to consider purchasing some of the hardware in advance. By purchasing in advance, you can set up the hardware and cables with the future in mind, preventing you from some cable rewiring, node movement, and reconfiguration complexities at a later date. This can substantially reduce the amount of time your system will be down during future expansion activity.

Notice in our Sample System that all 8 of the nodes in Frames 1 and 2 could reside in a single frame, but then many expansion choices would require adding a frame, moving nodes, cabling frames to each other, and so on. Such modifications cannot be done without considerable down time. However, the chosen configuration allows for some expansion without any major difficulties.

What must I understand before adding a switch(es)?

If you are thinking about increasing the number of switches in your system, at least one of the following is pertinent:

- 1 switch to 2 switches

  Cables need to be added, but the first switch could continue running until the new switch is ready for installation tests.

- 2 switches to 3 switches, or 3 switches to 4 switches

  Cables must be rerouted. This scenario can cause a significant amount of system down-time. For highest availability, consider installing more frames initially, with empty slots for future node additions.

- 4 switches to 5 or more switches

  Addition of a switch-only frame requires re-cabling, typically taking several days to accomplish. This is a complex scenario that requires detailed planning.

- 6 to 8 switches

  Once configured with a switch-only frame, additional frames can be added without cabling changes to other frames. With careful planning, system outages can be reduced, although installation tests do require checking the entire switch network.

What network topology topics do I need to consider?

Whenever you modify your system by adding additional hardware, your network topology is affected. This section discusses networking topics you should consider prior to adding any hardware to your system:

- Nameserver

  Every node in your system has a name assigned to it which is resolved by the nameserver you are using. The nameserver translates the symbolic name assigned to a node into its internet address. As you contemplate adding nodes to your system, plan ahead for the names you will assign to the nodes and how your nameserver will resolve them.

- Available addresses

  Nodes have internet addresses assigned to them, as well as names. While you are planning to add nodes to your system, you need to also plan for the additional internet addresses that will be assigned to these nodes. In addition, while planning the addresses for these network interfaces, you might reserve additional addresses for expansion the next time your system grows.

  If you are using a netmask that limits the number of addresses you can have, you can change your netmask to free up addresses, or you can elect to use a different subnet.

What control workstation topics do I need to consider?

You need to make sure that the control workstation you currently have is capable of supporting the larger system. It must have sufficient processor speed, DASD, and other hardware - serial ports, Ethernet adapters, and so on. See Chapter 2, “Question 10: What Do You Need for Your Control Workstation?” on page 49.

What system partitioning topics should I consider?

Migration install enhancements do not require the system to be partitioned, but there are many situations when partitions may be advantageous, including:

- Testing new levels of software or equipment in isolation.
- Grouping common resources together for critical production workloads. Isolation may be necessary, all or part of the time, for security, separation of workloads, reduced performance interference between workloads, and to allow for more orderly migration.
- Handling changes in total system workloads, particularly when large parallel jobs are being run.
- Introducing major new applications.

The simplest planning guideline with regard to partitioning is to group nodes together in a common frame(s) if they are to belong to the same partition. Even with the new *System Partitioning Aid* (see Chapter 5, “Planning SP System Partitions” on page 101) there are some restrictions on subdividing switches. Bounding system partitions along frame boundaries also makes adding expansion frames easier, and keeps the system more available.

What expansion frame topics should I consider?

In some configurations, a frame may exist that contains nodes and a switch, but where the nodes do not completely use up the node switch ports. For example, a frame filled with eight wide nodes only uses eight node switch ports, leaving eight ports free. You may be able to add one or more expansion frames immediately after such a frame to allow the nodes in the expansion frames to take advantage of these unused switch ports. In our Sample System, Frame 2 is an expansion frame, and frame number 3 has been reserved for the addition of a second expansion frame to share Frame 1's switch.

Similarly, if a frame having a switch is filled with four high nodes, only 4 node switch ports will be occupied, leaving 12 unused. Up to 3 expansion frames may be inserted to make use of these 12 ports. For example, a single frame may be inserted containing any of 4 thin nodes, 4 wide nodes, 4 high nodes, or some mixture of node types.

Note that the expansion frame's number is dependent upon the frame to which it is attached. If the frame containing a switch is number 1, the first associated expansion frame must be numbered 2, the second 3, and the third 4. Therefore, if you foresee adding expansion frames to your system in the future, number your frames to allow for the insertion of expansion frames. Otherwise, the frames which immediately follow must be completely reconfigured.

If your system is organized for partitioning, you may want to leave unused slots for additional nodes, adding an extra frame if necessary; or by leaving gaps in the frame numbers to allow specific frame additions. This is particularly useful if the partition needs a mix of thin, wide, and high nodes.

Again, plan ahead for growth when you assign network addresses. This is easier to manage if you have reserved space for growth in your frame and partition layout.

What boot/install server topics should I consider?

- You should (generally) add a boot/install server for every 16 nodes being added.
- You must create a primary (and an optional backup) boot/install server for nodes running PSSP 1.2.

Scenario 1: Expanding the Sample System by Adding a Node

Note in the Sample System that slots 5, 6, 7 and 8 of Frame 2 are empty, and so we may install any of a thin, wide or high Node 21 at slot 5 of Frame 2. Further, if proper cabling has been used, only Nodes 1, 17 and 5 are connected to the switch chip to which Node 21 would normally connect; that is, Node 21's normal switch port on Switch 1 is unused. (See Chapter 5, “Planning SP System Partitions” on page 101 for more information on node switch port assignment.) So, we may indeed physically install Node 21 in this system as if it were there originally.

To install this new node in the system, and start it running on the switch:

1. Physically install the new node, including cabling to the switch.
2. Enter the new node's network data into the SDR.
3. Install the software on the node using a mksysb image.
4. Perform post-install customization.
   - Add required PTFs
   - Adjust file systems
   - Configure applications
   - Perform installation tests.
   - etc.
5. Bring the new node up on the switch; how depends on your switch type:
   - SP Switch -- Perform an **Estart**.
   - SP Switch -- Use the **Eunfence** command.
6. Perform switch installation test.

Scenario 2: Expanding the Sample System by Adding a Frame

Before addressing specific examples for the Sample System, review the possibilities for frame expansion, and general concerns.

Frame Expansion Possibilities

When you add a frame to your system, you can add the frame at the end of your system, between two existing frames, or even at the beginning. A special case of the first two possibilities is an expansion frame.

Expansion Frames

In some configurations, a frame may exist that contains nodes and a switch but the nodes do not completely use up the switch ports. One or more expansion frames may be added immediately following this frame whose nodes will share the preceding frame's switch.

Adding a frame at the end of the system

IBM recommends that you add frames only to the end of your system if you have not planned ahead for other expansion. Otherwise you will have to reconfigure the System Data Repository (SDR), and perhaps have to move nodes to accommodate your needs.

Adding a frame in between two existing frames

This is fairly straight forward if the frame number was reserved, whether or not the new frame is an expansion frame. However, if the frame number was not reserved, there can be much work to do. The new frame splits the old system into 2 pieces, and the second piece (the higher numbered frames) must be redefined to the system. Further, for a switched system, some amount of recabling will be necessary, prior to the cabling of the new frame to the existing system.

Adding a frame to the beginning of a system

If your system has a switch, the first frame in the system must have a switch. Therefore, if you plan on inserting the additional frame in the first position in your system, that frame must contain a switch.

If your system does not have a switch, you can insert the additional frame in the first position without any such restriction.

Beyond this item, this case has some of the same overhead as the previous case: the entire old system is the "second piece".

General Concerns for Adding a Frame(s)

The following are topics you need to consider when adding a new frame to your system.

1. Control workstation

   When adding a frame to a system, you need to ensure that the control workstation has enough spare serial ports to support the additional frames. One serial port is required for each additional frame. If you do not have enough ports, you will need to upgrade the control workstation.

   If you use HACWS, there are 2 control workstations to consider here.

2. Types of nodes in the existing configuration

   You need to consider what types of nodes you already have and what types you will be adding in the additional frame. For example, consider how thin, wide, and high nodes work together.

3. Switch

   You need to consider the implications involved if your system has a switch, either a SP Switch or an SP switch.

   - If you currently have one switch and are adding a second switch, you need to add the cables for the second switch. During this time, the first switch may be able to run until the new frame is ready for installation tests.
   - If you currently have two switches and add a third switch or you have three switches and add a fourth switch, you need to add and, perhaps, reroute cables. This scenario can cause a signification amount of system down-time. For highest availability, consider installing more frames with empty slots for future node additions.

4. SP Ethernet Network

   You need to consider the ethernet network being used. Ask yourself whether you want to separate the ethernet into multiple subnets. For example, do you want to have one network per frame with one boot/install server per frame or do you want to boot all of the frames from the control workstation?

   Also, consider the bandwidth of the default thin wire ethernet. This ethernet can load approximately 8 nodes at a time. With larger systems, there are higher technology ethernets available that can allow you to load software at a faster rate than with the thin wire ethernet.

5. IP Addresses

   Your decision for the previous concern will play a role in planning for IP addresses. You need to ensure that the nodes that will occupy the additional frame will have IP addresses. If you are using a netmask that limits the number of addresses you can have, you can either modify your netmask to free up addresses or you may need to use a different subnet.

6. System Partitioning

   If you have a partitioned switched system, and the new frame is an expansion frame, you may not need to re-partition, because partitioning for a switched system assumes the maximum number of nodes are present; so the expansion frame nodes are already handled. However, at this point you may decide you do not like where the new nodes have implicitly resided, in which case you must re-partition.

   If the new frame has its own switch, then you are increasing the number of switches in the system. If your system is partitioned, in this case you will need to re-partition the system because partitioning had not previously accounted for these new nodes.

   If you have a partitioned switchless system, you must re-partition, because partitioning in this case is based on the number of nodes actually installed.

Scenario 2-A: Adding an Expansion Frame to the Sample System

Note: See “Node Placement” on page 81, particularly Figure 11 on page 82, for the specifics on valid node placement, and Chapter 5, “Planning SP System Partitions” on page 101 for more information on assignment of nodes to switch ports.

Consider Frame 1 of the Sample System. It has only 5 nodes, and so 11 node switch ports are available for other nodes to use. Given Frame 1's configuration, 8 ports are actually set aside for Frame 1, and so 8 ports are available for expansion frames. Frame 2 uses only 2, but reserves at least 4. Specifically, Frame 2's nodes are located such that a second expansion frame of 4 nodes is valid. So, we may insert a Frame 3 with up to 4 nodes and cable all these nodes to Frame 1's switch.

Therefore, we need to accomplish the following:

1. Install the new hardware, and attach the new frame to the CWS via a 232 port.
2. Cable the new nodes to the Frame 1 switch.
3. Run the **spframe** command to establish the SDR entries for the new nodes.
4. Enter the new nodes' network data into the SDR.
5. Install the software on the new nodes using a mksysb image.

6. Perform post-install customization.
   - Add required PTFs
   - Adjust file systems
   - Configure applications
   - etc.
7. Bring the new nodes up on the switch; how depends on your switch type:
   - SP Switch -- Use the **Estart** command.
   - SP Switch -- Use the **Eunfence** command.
8. Perform installation tests.

Scenario 2-B: Adding a Frame at the End of the Sample System

For the Sample System, we could add a Frame 5 which is an expansion frame for Frame 4. Frame 4's switch has several unused ports, and Frame 4 has only 4 nodes which they are located such that Frame 4 may be expanded by as many as 3 frames. So, Frame 5 would be the first of these expansion frames. This expansion would be done like that done in Scenario 2-A.

Alternatively, we may want to add a frame after Frame 4 which has its own switch. Given the preceding discussion, we might want to designate the new switched frame as Frame 8 (or 6 or 7) to reserve space for Frame 4 expansion frames to come later. This case is more complicated, because we are adding a new switch, and hence changing an important part of the system. The following modifications must be made to the 2-A list:

- In addition to cabling the new nodes to the new switch, the new switch must be cabled to the existing switches.
- After adjusting the file systems in post-install customization, we must select a new switch configuration to indicate the new switch structure.
- Before bringing up the switch, use the **Eclock** command to get the system switches synchronized.
- Bringing the new nodes up on the switch requires use of the **Estart** command, at least on any partition containing new nodes.

Scenario 2-C: Adding a Frame in Between Two Existing Frames

Suppose we wanted to insert a frame between Frames 1 and 2, where this new frame will also be an expansion frame to Frame 1. To accomplish this expansion, we must first delete Frame 2 from the system, and then add Frame 2 (the new frame) and Frame 3 (the previous Frame 2) to the system. Note that the old Frame 2 nodes will be rebuilt as Frame 3 nodes. We must:

1. Save mksysb images of the original Frame 2 nodes; one image per unique node.
2. Use the **spdelfram** command to remove Frame 2 configuration data from the SDR.
3. Add the new Frame 2 as in Scenario 2-A above.
4. Add the new Frame 3 as in Scenario 2-A, using the newly saved mksysb images as appropriate.

Scenario 3: Expanding the Sample System by Adding a Switch

Before going through the scenario, review the list of topics to consider when planning to add a switch. See “The Physical Makeup of a Switch Board” on page 104 to understand how a switch works.

1. Switch type

   What type of switch will you be adding? The table below describes the types available.

   If you are adding any of the switches in the table, an IBM Customer Engineer installs the switch hardware on your system.

2. Frame support

   Prior to adding the switch, you need to consider which frames the switch will support and record your information on the Switch Configuration Worksheet.

Switch Type	Description	Feature Code
Scalable POWERparallel Switch (SP Switch)	This switch connects all the processor nodes, providing enhanced scalable high-performance communication between processor nodes for parallel job execution.	4011
Scalable POWERparallel Switch-8 (SP Switch-8)	This switch provides enhanced high-performance switch function for small systems (up to 8 total nodes).	4008
High Performance Switch and High Performance LC-8 Switch	Available for existing systems only.	4010 and 4007(LC-8)

The Switch Scenario

The Sample System has 3 frames, but only 2 switches. Frame 2 has no switch since it is an expansion frame using Frame 1's switch. Suppose you choose to give Frame 2 its own switch - apparently a preliminary step to further changes. So, Frame 2 will no longer be an expansion frame. You must:

1. Quiesce switch traffic.
2. Install the new switch in Frame 2.
3. Re-cable the nodes of Frame 2 to the new switch.
4. Cable the new switch (now Switch 2) in Frame 2 to the switches in Frames 1 and 4, and re-cable the switch in Frame 4 (now Switch 3) to the switch in Frame 1.
5. Choose a new switch configuration which matches the expanded system.
6. Use **Eclock** to synchronize the switches.
7. Set the nodes of Frame 2 to the "customize" boot status. Then reboot the Frame 2 nodes, or run **pssp_script**, to get the these nodes recustomized for their new switch.
8. Use the **Estart** command, once for each system partition, to bring up the new switch fabric.
9. Perform install tests to assure the new hardware and connections perform correctly.

Chapter 10. Planning for Migration

This chapter includes factors to consider when planning to migrate an IBM RS/6000 SP to PSSP 2.3 and AIX 4.2.1 or later. This information applies to software upgrades being done on existing IBM RS/6000 SPs running supported levels of PSSP and AIX. Refer to other chapters of this manual for information pertaining to reconfiguring or expanding an existing SP system, or new SP system installations.

Migrating an IBM RS/6000 SP to newer software levels is a relatively complex task, but these complexities (and risks) can be minimized by thoroughly planning each migration phase before beginning the migration.

The principle migration planning phases are:

- Developing your migration goals:

  Briefly discusses considerations such as, what software is supported at various migration endpoints, and how-to plan your SP system configuration in preparation for migration.

- Developing your migration strategy:

  Briefly discusses system requirements and migration options you need to consider while planning your migration goals and the steps you need to complete to achieve those goals. Note that understanding the advantages and disadvantages of coexistence and partitioning, which are PSSP migration tools, will help you refine your migration strategy.

- Reviewing your migration steps:

  Briefly summarizes the high level migration steps and provides a transition to the detailed migration information provided in the *IBM Parallel System Support Programs for AIX: Installation and Migration Guide*

The PSSP Installation and Migration Guide describes the specific steps to be completed in implementing a software migration. Other manuals that may be beneficial for the planning phase include:

- Other PSSP for AIX manuals (e.g., Administration Guide, Managing Shared Disks).
- The AIX Installation Guide.
- The ITSO Redbook "A Holistic Approach to AIX 4.1 Migration, Planning Guide."
- The ITSO Redbook "AIX Ver. 4.2 Differences Guide."
- Manuals for IBM LPPs and other products you may be using.

Note that the underlying migration support provided by PSSP 2.3 is basically the same as that supported by PSSP 2.2. There are some new considerations that arise from the function in PSSP 2.3, but the base support for the mechanics of performing a migration are largely unchanged.

© Copyright IBM Corp. 1997

Developing Your Migration Goals

Before you can begin planning the actual system migration steps, you must understand your current system configuration and the system requirements that led you to that configuration. Also, before planning begins, you should review prior system plans for unmet goals. Assessing the priority of the goals or why they were unmet may influence how you will conduct the current system migration.

Similarly, while the configuration worksheets found in this manual are generally not required for performing a software migration, there may be merit in reviewing your previous set, and possibly reviewing or completing the current worksheets. For example, this may be appropriate when evaluating the use of system partitions or coexistence in your current systems or as part of your planned migration strategy, or in determining any changes to your boot/install server configuration.

The underlying task in planning your migration is to determine where you want to be, ultimately or in stages, as applicable. There are general factors that drive the requirement for migrating to new software levels, including both advantages (e.g., new function, performance) and possible impacts or disadvantages (e.g., production down-time, stability). The fact that you are planning a migration implies that these factors have already been considered.

Another factor that will influence your migration plans involves the dependencies and limitations that exist between applications. For example, if you plan to run General Parallel File System (GPFS), you must run your system with Recoverable Virtual Shared Disks (RVSD). Besides co-requisite software limitations, other limitations may involve operating systems, system software, and applications which may operate in your current system environment but not in the migrated environment.

These software requirements, matched against your IBM RS/6000 SP's workload will generally drive three key components of your migration goals:

1. Planning your base software requirements.
2. Planning how many nodes you will migrate.
3. Planning your migration in verifiable stages.

Migration tools like coexistence and system partitioning will help you fully develop your SP systems's efficiency. However, you still need to fully assess your system so that you will have all of the information needed to plan the steps of your migration.

A full migration plan involves breaking your migration tasks down into distinct, verifiable (and recoverable) steps, and planning the requirements for each migration step. A well-planned migration has the added benefit of minimizing system downtime.

Planning base software requirements

Supported migration paths

Supported paths for migrating to PSSP 2.3 and AIX 4.2.1 are as follows:	
PSSP Level:	AIX Level:
PSSP 2.2	AIX 4.2.1, 4.2.0, 4.1.5, 4.1.4
PSSP 2.1	AIX 4.1.5, 4.1.4, 4.1.3
PSSP 1.2	AIX 3.2.5

Supported software levels

Your installation's current operational requirements should give you a good understanding of the software requirements that will exist in your IBM RS/6000 SP once it has been migrated to PSSP 2.3 and AIX 4.2.1 or later. In addition to the operational requirements placed on your system software, IBM RS/6000 software products also have PSSP release level dependencies. The following table summarizes those dependencies.

PSSP/AIX Level:	Supported IBM LPP Release:
PSSP 2.3 (5765-529) and AIX 4.2.1 (5765-655 or 5765-A34)	• LoadLeveler 1.3 (5765-145) • Parallel Environment for AIX (PE 2.3) (5765-543) • Parallel ESSL 1.2 (5765-422) • General Parallel File System 1.1 (5765-B95) • Recoverable Virtual Shared Disk (RVSD) 2.1 (5765-646) • RVSD 1.2 • PIOFS 1.2 (5765-297) • Performance Toolbox Parallel Extensions (priced feature of PSSP 2.3) • CLIO/S 2.2 • NetTape Tape Library Connection 1.2 (5765-643) • Network Tape Access and Control System 1.2 (5765-637) • HACMP 4.2 • HACWS (priced feature of PSSP 2.3, also requires HACMP)
PSSP 2.2 (5765-529) and AIX 4.2.1 or AIX 4.2.0 (5765-655 or 5765-A34)	• LoadLeveler 1.3 • PE 2.2 • PVMe 2.2 • PESSL 1.2 • PIOFS 1.2 • Performance Toolbox Parallel Extensions (priced feature of PSSP 2.2) • RVSD 1.2 • CLIO/S 2.2 • NetTape 1.1.1 • HACMP 4.2
PSSP 2.2 (5765-529) and AIX 4.1.5 or AIX 4.1.4 (5765-393 or 5763-A34)	• LoadLeveler 1.2.1 and 1.3 • PE 2.2 • PVMe 2.2 • PESSL 1.2 • PIOFS 1.2 • Performance Toolbox Parallel Extensions (priced feature of PSSP 2.2) • RVSD 1.2 • CLIO/S 2.2 • NetTape 1.1.1 • HACWS (priced feature of PSSP 2.1) • HACMP 4.2
PSSP 2.1 (5765-529) and AIX 4.1.5, AIX 4.1.4, or AIX 4.1.3 (5765-393 or 5763-A34)	• LoadLeveler 1.2.1 or 1.3 • PE 2.1.01.11 • PVMe 2.1 • PESSL 1.2 • PIOFS 1.1 and 1.2 • RVSD 1.1 • CLIO/S 2.2
PSSP 1.2 (5765-296) and AIX 3.2.5 (5756-030)	• LoadLeveler 1.2.0 • PE 1.2.1 • PVMe 1.3.1 • PESSL 1.1 • PIOFS 1.1 • RVSD 1.0 • CLIO/S 2.2

Refer to other IBM documentation for information on AIX requirements for other LPPs in the IBM RS/6000 software catalog.

Planning how many nodes to migrate

Subject to your requirements, you may migrate your entire IBM RS/6000 SP or part of it. When migrating your system, IBM has provided some features to help provide flexibility, two of which are coexistence and system partitioning.

1. Coexistence:

   Coexistence provides a mechanism for mixing PSSP and AIX levels within an IBM RS/6000 SP system or system partition, subject to certain software limitations. Coexistence functions with or without partitioning.

2. System partitioning:

   System partitioning provides a mechanism for dividing an IBM RS/6000 SP into logical systems. The definition of these logical systems is a function of the switch chip which results in the system partitions being isolated across the switch.

Evaluate your system requirements against coexistence and partitioning. Think about what applications you need to run and what levels of PSSP and AIX are needed to support those applications. Then, factoring in your current IBM RS/6000 SP configuration, determine how many nodes you will need to run each type of workload. Important considerations and other relevant information on these two features is provided in the section of this chapter called "Developing a migration strategy."

Note: Before migrating any nodes, the control workstation must be migrated to the highest PSSP and AIX levels you plan to run on any of the nodes.

Planning migration stages

Some migrations have service prerequisites that need to be applied to your system, refer to the Memo to Users for specific information. These services can be done well in advance but must be done before migrating to PSSP 2.3.

When possible, you should define your migration with multiple stages, breaking them down into distinct steps that can be easily planned and verified. You should plan a reasonable amount of time to complete each step, define validation steps and periods, and be prepared for recovery or back out should a step not go as planned. Proper migration staging can better ensure an effective and successful migration, while minimizing system down-time. Note that you can also distribute system down-time over a longer period by migrating a few nodes at a time, subject to your requirements.

There are three main high-level recommendations for doing this:

1. Migrate the control workstation then validate the IBM RS/6000 SP system.
2. Migrate a subset of the nodes then validate the IBM RS/6000 SP system.
3. Migrate and validate the remainder of your SP system according to plan.

With SP systems operating at PSSP 2.2, you may also elect to first upgrade your AIX level (if required), and validate your IBM RS/6000 SP operations, before

continuing with the migration. For a migration to PSSP 2.3, this would entail first migrating to AIX 4.2.1, the crossover version of AIX for PSSP 2.2 to 2.3 migrations. Next, migrate the PSSP level from 2.2 to 2.3. This minimizes the amount of change placed on your IBM RS/6000 SP at each stage of a migration.

Note: SP systems operating at PSSP levels other than 2.2 must have both AIX and PSSP migrated in the same service window.

Developing Your Migration Strategy

The intent of this stage of your migration planning activity is to focus primarily on the scope of your migration in terms of the number of nodes, and the methodology to be employed in doing this. You should be entering this planning stage with a basic definition of what you want to migrate (e.g., how many and which nodes), and possibly with some thoughts on how you'd like to go about this.

If you are migrating an entire IBM RS/6000 SP system or an existing system partition, the next two sections on coexistence and system partitions may be unnecessary. If on the other hand you are interested in migrating a subset of your IBM RS/6000 system and you are not familiar with the available options, the information in those sections on using multiple system partitions and coexistence for migration may be beneficial.

Coexistence and system partitioning are options that provide flexibility in the number of nodes you need to migrate at any one time. Your migration goals may suggest the use of multiple system partitions, coexistence, a combination of the two, or neither. Understanding the advantages and disadvantages of coexistence and partitioning will help you assess their suitability for your needs.

Other factors that will influence your migration strategy include:

- Coexistence limitations on PSSP and the IBM LPPs that will run at each level.
- Setting up boot/install servers.
- Functional changes in PSSP 2.3.
- Migration approach options.

Each of these factors is discussed later.

Using system partitions for migration

The IBM RS/6000 SP supports multiple system partitions, which effectively subdivides an IBM RS/6000 SP into logical systems. These logical systems have two primary features:

1. Switch traffic in a system partition is isolated to nodes within that system partition.
2. Multiple system partitions may run different levels of AIX and IBM RS/6000 SP software.

These features facilitate migrating RS/6000 nodes in relative isolation from the rest of the system. Using these features, you can define a system test partition for newly migrated nodes. After the migration is complete and you have validated system performance, the nodes can be returned to production.

The fact that switch traffic in a partition is isolated to nodes within that partition also dictates the ability to use partitioning for migration. This limitation results from SP switch architecture in which, the switch chip connects nodes in a specific sequence. The switch chip therefore becomes the basic building block for a system partition and establishes a minimum partition size that depends on the partition's node types. It is this partition size that sets the granularity with which SP system may be upgraded to new software levels. Coexistence, described in the next section, can provide even finer granularity within a system partition.

Refer to the chapter on Planning for Expanding or Modifying Your System in this book for additional information on the use of system partitions.

Using coexistence for migration

In traditional IBM RS/6000 SP system partitions, all nodes within a single system partition generally run the same levels of operating system and system support software. However, different partitions can run different levels of operating system and system support software. Therefore multiple release levels of LPPs like Parallel Environment or Recoverable VSD can run on an IBM RS/6000 SP without restriction within the separate system partitions.

For many installations with the desire to migrate a small number of nodes, the system partition approach is not viable. This would apply to a small system (in terms of number of nodes), or a system with a migration requirement that includes migrating less nodes than can be represented by a system partition, possibly only one node (e.g., for LAN consolidation). It may also be the case where the switch isolation function is not desired. Coexistence is aimed specifically at providing additional flexibility for these kinds of migration scenarios.

With PSSP 2.3, coexistence support is provided for multiple levels of PSSP, with corresponding levels of AIX, in the same system partition. However, there are requirements and certain limitations which must be understood and adhered to in considering the use of coexistence. Some of the IBM RS/6000 SP LPPs are not supported or are restricted in a mixed system partition. For example, the IBM RS/6000 SP parallel processing products (e.g., Parallel Environment) are generally not supported in mixed system partitions. Inter-node communication over the switch using TCP/IP is supported, but user space communication is not available in a coexistence configuration. The supported coexistence configurations and the limitations that apply to these coexistence configurations are described in the remainder of this section.

Coexistence limitations

PSSP 2.3, like PSSP 2.2, supports multiple levels of AIX and PSSP in the same system partition (remember that an unpartitioned system is viewed as having one default system partition). As in PSSP 2.2, all combinations of PSSP are supported except for combinations of PSSP 1.2 and PSSP 2.1 nodes which may not be used in the same system partition. Note that PSSP 1.2 and PSSP 2.1 continue to be supported in the same IBM RS/6000 SP system, but they must be in separate system partitions.

An enumeration of the possible levels of PSSP that are supported in a system partition is as follows:

- PSSP 2.3 + PSSP 1.2

- PSSP 2.3 + PSSP 2.1
- PSSP 2.3 + PSSP 2.2
- PSSP 2.3 + PSSP 2.2 + PSSP 1.2
- PSSP 2.3 + PSSP 2.2 + PSSP 2.1
- PSSP 2.2 + PSSP 1.2
- PSSP 2.2 + PSSP 2.1

In this context, the PSSP levels imply the corresponding supported levels of AIX. Note that this specification is in terms of PSSP levels - one could conceivably have two nodes running one level of PSSP yet each node could be running different levels of AIX as required by that level of PSSP.

Many software products have PSSP/AIX dependences - you must ensure that the proper release levels of these products are used on nodes running the corresponding PSSP/AIX levels.

Switch management and TCP/IP over the switch

The PSSP switch support (CSS), provides for switch management and TCP/IP over the switch between nodes in a mixed partition. Any node can be the switch primary node, subject to the following:

In a mixed system partition containing PSSP 1.2 nodes:

- ARP support requires the primary node to be a PSSP 2.3 or PSSP 2.2 node.
- Node isolation support (**Efence, Eunfence**) is not available and must be disabled by either using a PSSP 1.2 primary node or using a PSSP 2.3 or PSSP 2.2 primary node and setting **Eduration** to the maximum interval of 40 days.

In a mixed system partition that contains no PSSP 1.2 nodes:

- The above ARP and Node isolation restrictions do not apply.
- Any node can be the switch primary backup node (applicable to SP Switch systems only).

High Availability Group Services API (GSAPI)

Programers writing to the GSAPI and also Systems Administrators with systems using the GSAPI need to be aware that all nodes must be at PSSP 2.3 in order to utilize the new PSSP 2.3 GSAPI functions. The GSAPI functions in PSSP 2.3 can interoperate with those in PSSP 2.2, but the level of function available in this configuration is the PSSP 2.2 level. In order to exploit the new GSAPI functions in PSSP 2.3, all nodes in a system partition must be running PSSP 2.3

The GSAPI function is not available in PSSP 2.1 or PSSP 1.2.

VSD and IBM Recoverable VSD (RVSD)

Virtual Shared Disk (VSD) *coexistence* is available with all supported coexistent system configurations, but a level of *interoperability* across releases is only supported between nodes in a mixed system partition running PSSP 2.3 and PSSP 2.2.

In mixed system partitions containing PSSP 1.2 or PSSP 2.1 nodes, the VSD subsystem in PSSP 2.3 and PSSP 2.2 can coexist with the VSD subsystem at these earlier levels:

- PSSP 2.3 and PSSP 2.2 nodes will only configure VSDs that are served by PSSP 2.3 and PSSP 2.2 nodes.
- Attempts to configure VSDs on PSSP 1.2 or PSSP 2.1 nodes for VSDs served by PSSP 2.3 and PSSP 2.2 nodes will succeed, but requests to these VSD's will not be served and will eventually time out.

The VSD subsystem in PSSP 2.3 can interoperate with the VSD subsystem in PSSP 2.2, but the level of function available in this configuration is the PSSP 2.2 level. Also, in a system or system partition operating at PSSP 2.3, RVSD 2.1 will interoprate with RVSD 1.2. However the level of function available in this configuration is the RVSD 1.2 level.

Note: RVSD 2.1 **does not** operate under HACMP, therefore RVSD 2.1 and 1.2 **will not** interoperate if your SP system is running HACMP. For more information, see the "Memo to Users."

In order to exploit the PSSP 2.3 enhancements to the VSD subsystem and the new functions in RVSD 2.1, all nodes in a system or system partition must be running PSSP 2.3 and RVSD 2.1. Additionally, when the last RVSD 1.2 node is migrated to RVSD 2.1, all nodes in the system partition must have RVSD reset. This enables the nodes in that partition to determine that they should be using the PSSP 2.3/RVSD 2.1 level of function.

Customers migrating from PSSP 2.2 and RVSD 1.2 only need to migrate PSSP 2.2 to PSSP 2.3. RVSD 1.2 will run on PSSP 2.3 and can be migrated later when the RVSD 2.1 enhancements are needed.

- RVSD 1.2 runs on PSSP 2.2 and PSSP 2.3
- RVSD 2.1 will only run on PSSP 2.3

RVSD includes the following quorum rules/restrictions in a coexistence environment:

- RVSD 2.1 (on PSSP 2.3 nodes) and RVSD 1.2 (on PSSP 2.2 nodes) will treat nodes running earlier releases of RVSD/PSSP as down. Similarly, earlier releases of RVSD will not recognize RVSD 2.1 or RVSD 1.2 nodes.
- Quorum will be evaluated accordingly:
  - RVSD 2.1 (PSSP 2.3) and RVSD 1.2 (PSSP 2.2):

    (number_of_PSSP_2.3_or_2.2_VSD_nodes + CWS)/ 2 + 1

    Note: quorum may be overridden by the administrator in RVSD 2.1 and RVSD 1.2
  - RVSD 1.0 (PSSP 1.2) and RVSD 1.1 (PSSP 2.1)

    (number_of_all_VSD_nodes + CWS) / 2 + 1

    Note: upgrading more than half of the VSD nodes to PSSP 2.3 or PSSP 2.2 will cause the VSD group running on earlier releases to become inactive.

General Parallel File System for AIX (GPFS)

GPFS is not supported in a coexistence configuration. All nodes within a system partition must be running PSSP 2.3 in order to use GPFS. Also, RVSD 2.1 is needed for GPFS function.

Extension Node Support

Extension Node support in PSSP 2.3 will function in a mixed system partition that does not includes AIX 3.2.5/PSSP 1.2 nodes. However, the control workstation, the primary node and the primary backup node **must** be running PSSP 2.3. In the event of a failure it is the administrator's responsibility to override the newly assigned primary or primary backup (to ensure it is a node running PSSP 2.3).

Parallel application products

Parallel applications like IBM Parallel Environment for AIX, or Parallel ESSL for AIX, are not supported in a mixed partition. This applies to their use for either IP or user space communication. Parallel applications can only run in a system partition that has all of its nodes at the same PSSP level.

LoadLeveler

LoadLeveler 1.2.1 and 1.2.0 coexistence is supported for serial scheduling in a system partition with nodes running PSSP 2.2 and PSSP 1.2, respectively. LoadLeveler 1.2.1 is supported on both PSSP 2.1 and PSSP 2.2. LoadLeveler 1.3 (running on PSSP 2.3 or PSSP 2.2), is not compatible with earlier levels of LoadLeveler.

LoadLeveler provides other mechanisms for migration, including the use of separate LoadLeveler clusters.

PIOFS and NetTAPE

The following products, at the specified release levels support PSSP 2.3, PSSP 2.2 and PSSP 2.1, but are not supported for migration in a mixed partition. These products require AIX 4.1 or greater (except the NetTAPE products), and are not compatible with releases running on PSSP 1.2:

- Parallel I/O File System 1.2
- IBM Network Tape Access and Control System (NetTAPE) for AIX, and IBM NetTAPE Tape Library Connection

IBM Client Input Output/Sockets (CLIO/S) 2.2

CLIO/S 2.2 functions under all supported levels of PSSP provided only one level of PSSP is operating in the partition. Additionally, CLIO/S 2.2 operates in a mixed partition if all nodes in the partition (or system) are operating at either PSSP 2.3 or PSSP 2.2. CLIO/S 2.2 will not coexist with older versions of CLIO/S.

IP Performance Tuning

This section presents some high-level considerations related to performance of TCP/IP over the switch in a coexistence environment. Note that these are simply important factors to be considered in approaching tuning, and that the IBM RS/6000 SP organization has not conducted significant performance evaluation studies in this area.

In general, with all else being equal, the goal for performance achieved between nodes running different levels of PSSP should be the performance delivered by the

earlier level of PSSP (each release of PSSP has included performance improvements). Traditional tuning considerations, such as those derived from the performance characteristics of different IBM RS/6000 SP node types and installation/application communication patterns will still apply. With coexistence, tuning activities may now also need to reflect the levels of PSSP on the particular nodes running (communicating) in a mixed system partition.

There are two main areas where this may come into play, particularly involving communication between AIX 3.2.5 nodes and AIX 4.1 (and later) nodes:

1. Tuning for AIX - tuning methodologies typically employed for different releases.
2. Tuning for the switch - appropriate settings for the adapter device driver buffer pools.

In tuning TCP/IP on AIX, the main consideration involves the mbuf tunables, which should be set to reflect the different TCP window sizes between AIX 3.2.5 and AIX 4.1 (and later). Note that there are different tunables between the two releases. For example, the AIX 3.2.5 parameters for mbuf allocation, lowmbuf, lowclust, and mb_cl_hiwat, are not available in AIX 4.1 (and later). A reasonable approach is to leave these unchanged, and then investigate these settings if diminished performance is experienced between AIX 3.2.5 and AIX 4.1 (and later) nodes, compared to performance between AIX 4.1 (and later) nodes.

In tuning for the switch, the primary consideration is the values used for the switch adapter/device driver IP buffer pools. The rpoolsize and spoolsize parameters are available in PSSP 2.1, PSSP 2.2, and PSSP 2.3 (PTF needed, see "Memo to Users" for latest updates) are changed using the chgcss command; in PSSP 1.2, the aggregate pool size is a function of the size of kernel memory. These need to be set large enough to accommodate the larger window sizes in AIX 3.2.5 to prevent the AIX 3.2.5 nodes from over-runing the buffer pools on the AIX 4.1 (and later) nodes.

In summary, the recommended approach for factoring coexistence into your overall IBM RS/6000 SP tuning strategy is to start with the above general approach to tuning for mixed levels of AIX/PSSP. Consider the other characteristics that influence performance for your specific configuration, making trade-offs if necessary. Then, as with any performance tuning strategy, make refinements based on your results or as your IBM RS/6000 SP migration strategy progresses.

For additional information related to tuning the IBM RS/6000 SP, refer to the System Performance chapter of the PSSP Administration Guide and other AIX documentation as appropriate.

Boot/Install servers and other resources

Your migration planning activities may need to consider changes to your boot/install server configuration, particularly if you are running AIX 3.2.5/PSSP 1.2 and plan on keeping some nodes at that level. PSSP 2.3 supports these nodes in an IBM RS/6000 SP. However, because it runs on AIX Version 4, PSSP 2.3 does not provide boot/install support for nodes at the AIX 3.2.5 level. For instance, if your IBM RS/6000 SP system is running PSSP 1.2 exclusively, you will need to allocate one of your PSSP 1.2 nodes to provide this boot/install capability to the other PSSP 1.2 nodes. IBM recommends two such boot/install servers, defined to boot/install each other, to provide a proper recovery methodology.

One other area of migration planning is that of additional resources. For example, this would include your evaluation of the need for additional DASD to support multiple levels of software, particularly if you plan on using coexistence. For this, you should plan on having 2 GB of disk allocated for each level of AIX/PSSP being served by your control workstation or boot/install server. This is typically used for additional directories under the modified directory structure introduced in PSSP 2.2, specifically:

- multiple AIX mksysb subdirectories under: /spdata/sys1/install/images/
- multiple AIX subdirectories under: /spdata/sys1/install/

  which include: lppsource/

  and: spot/
- multiple PSSP subdirectories under: /spdata/sys1/install/pssplpp/

Functional changes in recent levels of PSSP

Automounter

PSSP 2.3 replaces the Amd automount daemon, which is freely available under license, with the AIX automount daemon, which is available as part of NFS in the Network Support Facilities of AIX Base Operating System (BOS) Runtime. Amd uses map files to define the automounter control. These map files are not compatible with the AIX automounter and must be converted.

If your current installation has the Amd configuration turned on and is using the SP User management Services (SP site environment variables *amd_config* and *usermgmt_config* are both **true**), the SP maintains a user home directory map file for the/**u** file system. If you have not modified the/**etc**/**amd**/**amd-maps**/**amd.u map** file, the PSSP System Management Software will automatically convert this map file for you when migrating to PSSP 2.3.

If you have modified the **amd.u** Amd map file, added your own map files for additional automounter support, or in any other way customized your Amd installation, you will need to consider the impact of automounter conversion in planning your migration to PSSP 2.3. You will need to manually convert your Amd map files to AIX Automount map files. Please refer to the following AIX publications for information on the AIX automounter and map file format:

AIX command reference: *automount* command

System Management Guide: Communications and Networks: Mounting an NFS File System using the automount daemon

System Management Guide: Communications and Networks: *NIS Automounter*

If you find it impossible to convert your current installation to use the AIX automount daemon, you may provide your own automounter support through a set of user customization scripts. See "Managing the Automounter" chapter of the SP Administration Guide for more details.

Print Management

PSSP 2.3 no longer supports the SP Print Management Subsystem. IBM recommends the use of Printing Systems Manager (PSM) for AIX as a more general solution for managing printing on the IBM RS/6000 SP. Note that the SP Print Management Subsystem is still supported on nodes of an IBM RS/6000 SP that are running earlier levels of PSSP, even if the IBM RS/6000 SP system has been partially migrated to PSSP 2.3.

/usr serving

For installations running PSSP 1.2, AIX V4 no longer supports a /usr server. In migrating to a later level of PSSP, space must be allocated locally for /usr. These requirements are typically several hundred MB.

HACWS Migration Strategy

A High Availability Control Work Station (HACWS) configuration at the PSSP 2.3 level requires the following software on both control workstations:

- PSSP 2.3 (including the ssp.hacws 2.3.0.0 file set).
- Any level of AIX 4.2.1 or greater that is supported with PSSP 2.3. Refer to the "Memo to Users" to determine what levels of AIX are supported with PSSP 2.3.
- Any level of HACMP 4.2 or greater that is supported with the level of AIX that you are using. Refer to the appropriate HACMP documentation to determine what levels of HACMP are supported with the level of AIX that you are using or considering.

Whether or not you need to upgrade all three of these at the same time depends on your software levels before migration. You can choose to upgrade your HACWS configuration a little at a time, stopping along the way to run your system long enough to become confident that it is stable before proceeding to the next phase.

For more information see the *IBM Parallel System Support Programs for AIX: Installation and Migration Guide*

AIX and PSSP migration options

There are three main ways to migrate your system each with their own advantages:

1. Migration install - preserves base configuration
2. Overwrite install - provides a clean start, may be faster than a migration install
3. Migration then re-install - migrate one node then use this image to re-install remaining nodes

After performing any needed system preparation steps, the next step in migrating your IBM RS/6000 SP system is to migrate the control workstation to the appropriate level of AIX and PSSP. That is, the control workstation must be migrated to AIX 4.2.1 or later and PSSP 2.3 before migrating any of the nodes.

One option available to installations planning on migrating to PSSP 2.3 from PSSP 2.2 is to first migrate only AIX, validate your IBM RS/6000 SP system (at the PSSP 2.2 level), then upgrade PSSP when comfortable or scheduling permits. This would involve upgrading your AIX level to AIX 4.2.1, which is a PSSP 2.2-PSSP 2.3 cross-over or bridge release, through the application of AIX updates and service.

For systems running PSSP 1.2 or PSSP 2.1, or if an overwrite install is desired, the control workstation migration must include both AIX and PSSP upgrades before the SP system can be returned to production.

Note: Both upgrades must be done in the same service window.

Once the control workstation has been migrated to AIX 4.2.1 or later and PSSP 2.3 and the system has been validated, the nodes can be migrated. Start the node migration with boot/install servers if applicable. The same basic migration options exist for migrating the nodes i.e.:

- AIX Migration
- PSSP Migration
- AIX and PSSP Migration (done in the same service window)

Also, you can optionally migrate one node, then using the mksysb from that node to install the remaining nodes to be migrated.

Reviewing Your Migration Steps

This section summarizes the key components of a migration. These components should be reviewed and assessed, considered from a sizing and impact point of view, and qualified with respect to your overall migration goals and strategy. Additional details on these steps may be found in the *IBM Parallel System Support Programs for AIX: Installation and Migration Guide*

1. Determine your migration goals (which nodes, how many nodes)
2. Determine your migration strategy
3. Plan your migration windows
4. Plan your recovery procedures
5. Gather necessary materials
   - new release levels of AIX and PSSP
   - documentation - AIX, PSSP, LPP and other products required AIX and PSSP service (for older levels)
   - new release levels of other products used
   - any additional DASD required, resources (e.g., tape) for backups
6. Create system backups - CWS, nodes to be migrated
7. Conduct the migration, in stages as applicable
   - Apply required service to nodes prior to migration
   - Ready control workstation (e.g., DASD, PTF service, archive SDR, etc)
   - Migrate the control workstation, validate
   - Partition the system if necessary
   - Migrate a test node
   - Migrate boot/install servers
   - Migrate additional/remaining nodes
8. Tune the system

Appendixes

© Copyright IBM Corp. 1997

Appendix A. The System Partitioning Aid - A Brief Tutorial

PSSP includes a tool to facilitate system partitioning activity. The objectives of this application are to enhance understanding of system partitioning, and to allow you to create system partitioning configurations beyond those provided with PSSP. This application, called the *System Partitioning Aid*, is provided in two forms:

sysparaid a command line interface (CLI) which is text-file based;

spsyspar a graphical user interface (GUI) which provides capability to view graphical representations of system partitioning layout alternatives, and to dynamically create new alternatives.

The GUI makes use of the command line interface, and requires the *SP Perspectives* code for graphics support. Both interfaces allow you to verify candidate layouts, and allow you to save a new, valid layout to disk. The new layout is then available to be made the active configuration at a later date. This allows you to plan ahead for configuration changes.

This appendix describes the GUI, and then the CLI version of this application. This is the order of exposure recommended for the inexperienced partitioner. In addition, this appendix presents a partitioning exercise which addresses the example in Chapter 5 of this document.

The GUI - "spsyspar"

The GUI version of the System Partitioning Aid provides a dynamic view of the system partitioning layout, allowing you to modify the layout interactively.

The command **spsyspar** brings up the window shown in Figure 35 on page 176. This window consists of five screen areas:

Pull Down Menu Bar Menus provide pull down access to actions.

Tool Bar Icons provide immediate execution of certain actions.

Nodes Pane Graphic representation of targeted system partitioning layout.

System partitions Pane Iconic representation of system partitions in the current layout.

Information Area Displays information about the object or screen area at the current cursor location. (Resides at very bottom of window.)

© Copyright IBM Corp. 1997

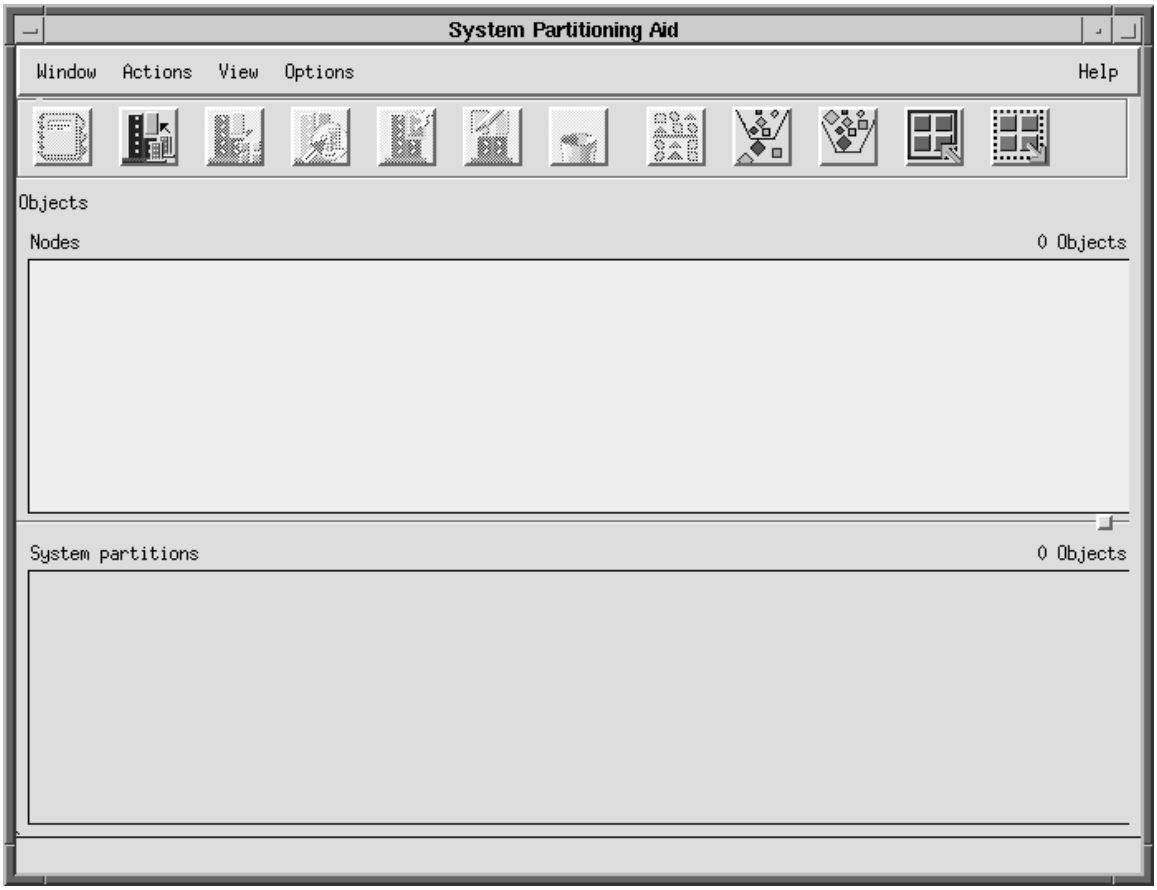

Figure 35. spsyspar's Main Window

In Figure 35, the Nodes and System Partitions panes are empty. If an SDR exists, **spsyspar** treats the active system partitioning layout as the current target, and pictures it in the object panes. So, on an active system, **spsyspar** does not come up with empty panes: the Nodes pane contains the frames and nodes of the system, and the System partitions pane contains system partition icons.

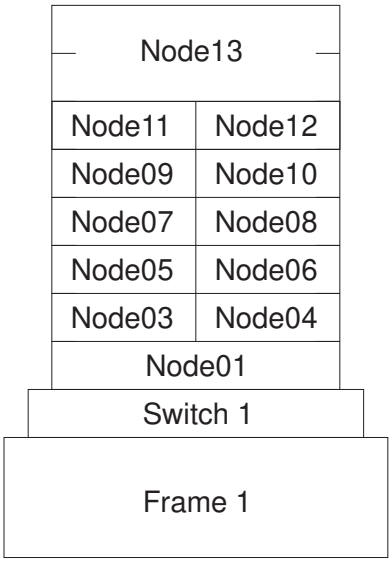

Figure 36. Sample 1-Frame System (1 wide, 10 thin, and 1 high nodes)

For example, assume you invoked **spsyspar** on the control workstation for the 1-frame system pictured in Figure 36, where there is 1 wide node, 10 thin nodes and 1 high node. If the active system partitioning layout has the bottom half of the frame in system partition "Alpha" and the top half in system partition "Beta", then **spsyspar** presents the window shown in Figure 37 on page 178. A single frame is presented in the Nodes pane, with the nodes pictured as defined (thin, wide, or high) in the SDR. Icons for partitions Alpha and Beta are shown in the System partitions pane.

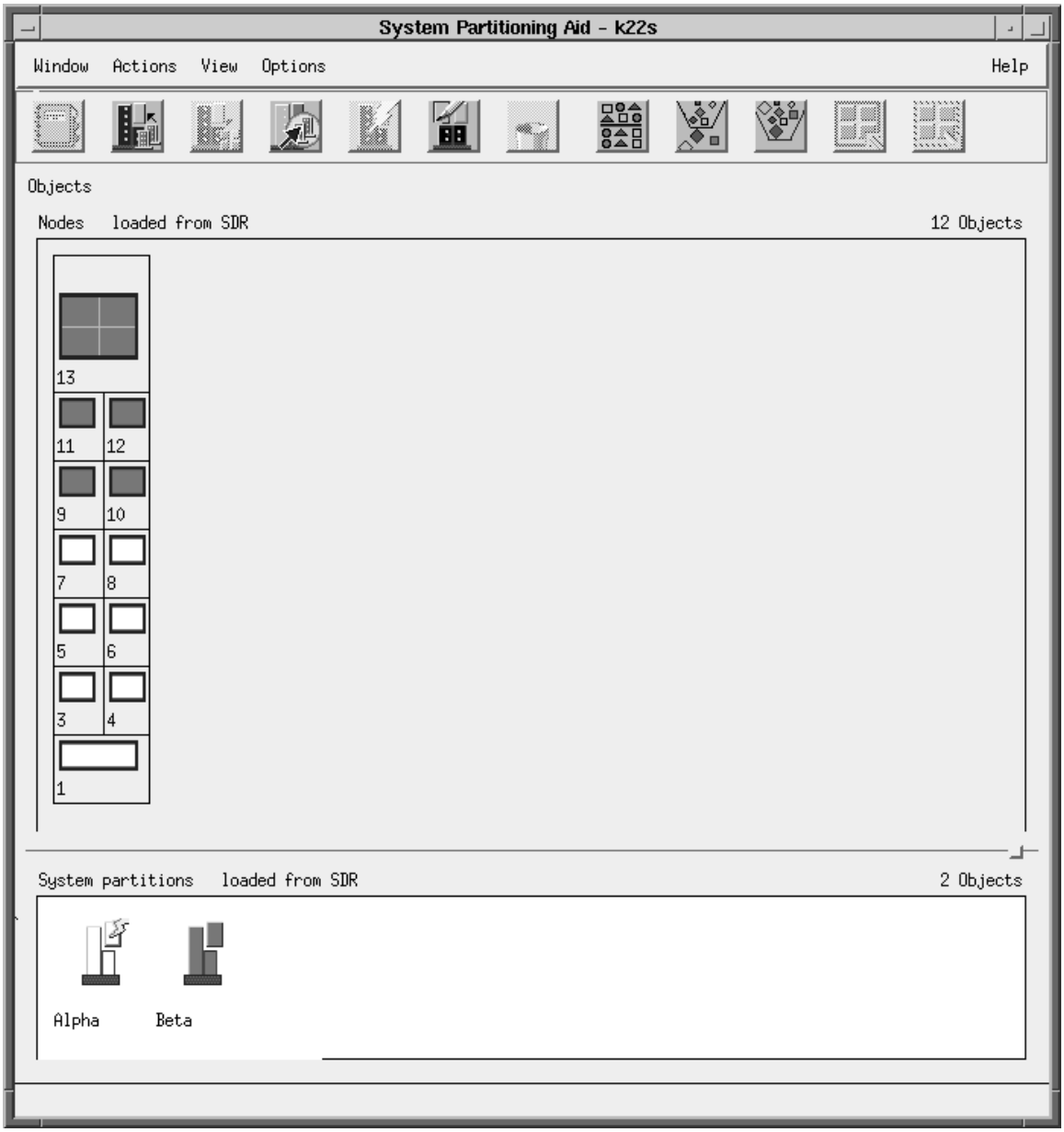

Figure 37. Main Window for Sample System

The **spsyspar** window is a standard window which you can move and size like any other window. The Nodes and System partitions panes become scrollable when appropriate. Also, the division of real estate between these two panes is controlled via the small box located between them and at the right side of the window; that box is called a "sash".

In Figure 37, notice that the title of the window contains " - k22s". "k22s" is the name of the control workstation of the target system. Also, if you look closely at the "System partition" pane of Figure 37, you'll see that the Alpha partition is marked with a "lightening bolt". This signifies that Alpha is the *active partition*. Hence, any partition-specific activity, such as assignment of nodes, would be directed at partition Alpha. In addition, the brighter colored System partitions pane is the pane of "focus". This affects the choices available from the Tool Bar and the Pull Down Menu - items not applicable for the current focus are grayed out.

Tool Bar Actions

The Tool Bar consists of several icons which allow you to execute important actions. These actions are also available through the Pull Down Menu Bar.

View and Modify Information About Selected Objects (Notebook)

The availability of the icons of the Tool Bar is generally affected by the nodes and/or system partitions previously selected. Actions which are not available appear grayed-out. For example, if you clicked on node 8 in the Nodes pane, and then select the first Tool Bar icon, which pictures a notebook, a new window comes up named "View Node 8" containing data relevant to node 8. This window appears in Figure 38.

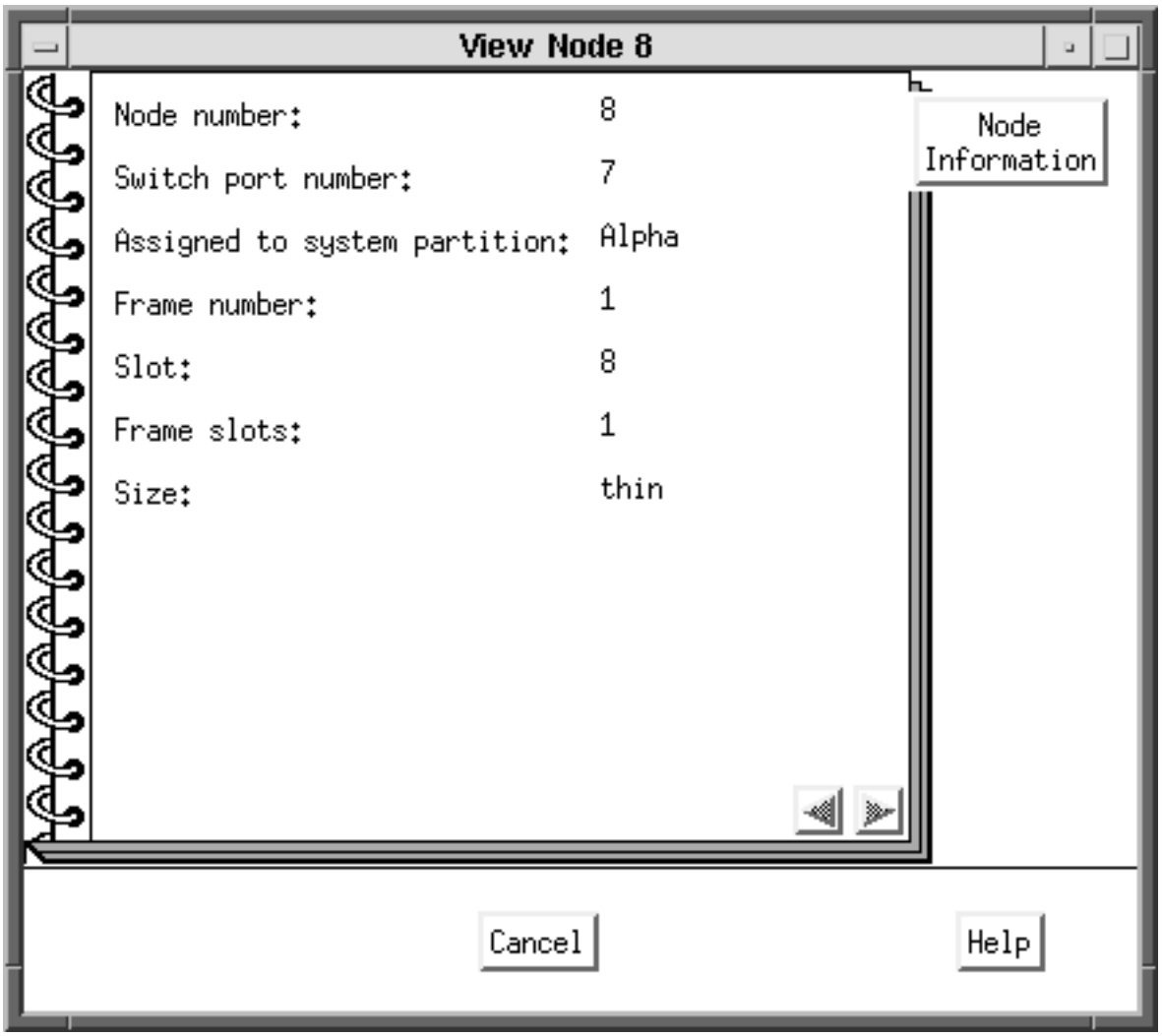

Figure 38. Notebook for Node 8 of Sample System

If you instead click on partition Alpha in the system partitions pane, and then select the notebook icon, you get a window named "View/Modify System Partition Alpha", which contains data for system partition Alpha. This system partition notebook is more complicated than a node notebook, and contains each of the following pages, which are shown in Figure 39 on page 180 for this example:

Definition partition name and description, together with current **spsyspar** session parameters

Nodes	a list of information for the nodes in this partition
Topology File	view of the topology file specifying this partition
Chip Allocation	switch chips allocated to this partition, if the configuration was not shipped by IBM
Performance	performance numbers for this partition, if the configuration was not shipped by IBM

Note: A configuration is either one of those shipped by IBM with PSSP in the directory /**spdata**/**sys1**/**syspar_configs**, or it was added later by a user of the System Partitioning Aid. The configurations shipped by IBM satisfy certain minimal bandwidth criteria, but partitions created using the System Partitioning Aid may not satisfy that criteria. Configurations created via the System Partitioning Aid are evaluated for correctness and performance. Hence, provision is made for the "Chip Allocation" and "Performance" pages of the system partition notebook to record such data for a user-created layout.

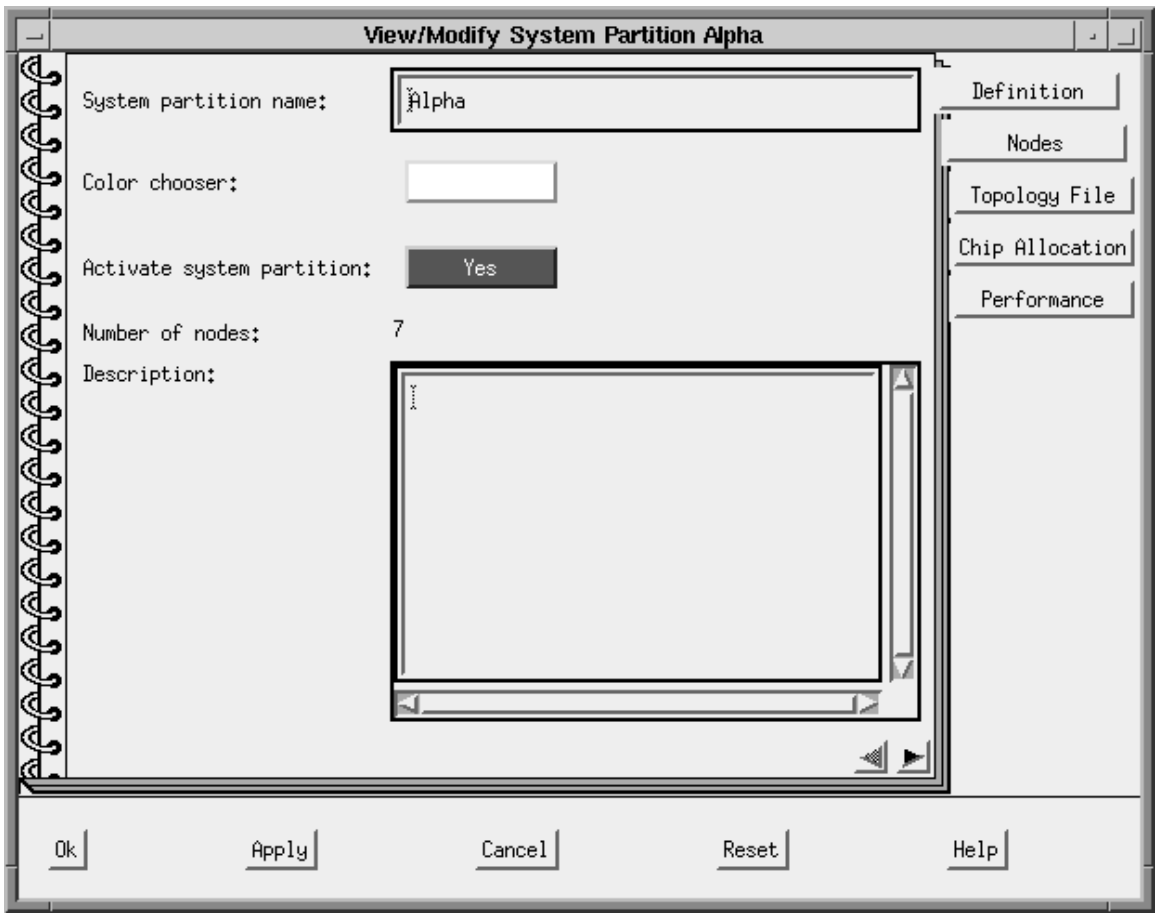

Figure 39. Notebook for Partition Alpha of Sample System

You can modify each attribute on the "Definition" page of the partition notebook, except the number of nodes. The other pages of the notebook are read-only.

Display Previously Defined and User Generated System Configurations

Select the second icon on the Tool Bar to display available system partitioning configurations. The resulting dialog box appears in Figure 40 and displays the configurations that you can select. Clicking on one of these configurations expands that configuration to show the corresponding layouts available - both those shipped by IBM and the ones created by users. In Figure 40, configuration 8_8 has been expanded showing there are three layouts available under this configuration.

If you click on a layout and press the "Open" button, **spsyspar** now treats that layout as the target system. This makes **spsyspar** useful in planning for future expansion. If the layout is for a configuration which matches the real system, the user has a choice of seeing nodes pictured as defined in the SDR. The default, and the only possibility if the SDR is unavailable, is to show only thin nodes with all slots populated, since **spsyspar** cannot know the correct node types to show, and so depicts all nodes as thin.

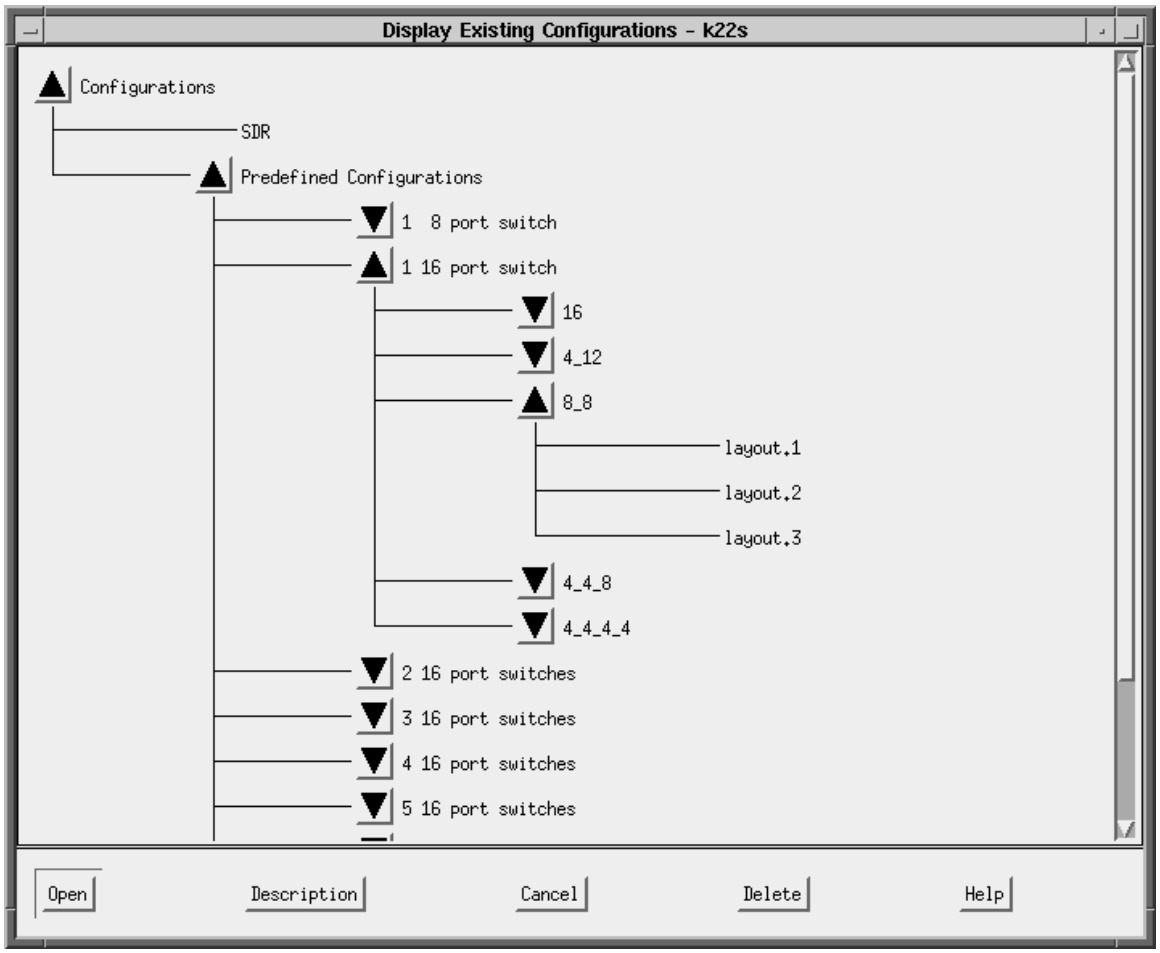

Figure 40. Alpha Notebook for Sample System

You also have the opportunity to read the description of a layout, or delete a layout created by a user. By looking at the description for layout.3 under configuration 8_8, you would see it is equivalent to the layout depicted in Figure 37 on page 178.

Place Selected Nodes into an Active Partition

You may set the active partition by selecting a partition in the System partitions pane and then choosing "Selective Active" under the "Actions" pull down. (See also the description for the fifth icon below.) Once an active partition is set, you may select nodes in the nodes pane and then select the third icon. This moves any selected nodes into the active partition. In addition, any nodes attached to the same switch chip(s) as the node(s) selected are also placed in the active partition. A message appears informing the user that this has happened.

In our example, if Beta is the active partition, and node 1 is selected, then clicking on the third icon moves nodes 1, 5, and 6 from partition Alpha to partition Beta.

Generate Files Used to Define System Configuration

The fourth icon checks whether the current system partition layout is equivalent to one which already exists, and if not, builds the corresponding layout in the appropriate location on disk. Then this new layout may be chosen as the active configuration at a later time.

Activate a System Partition for Node Assignment

The fifth icon provides an alternative way of setting the active partition. This is equivalent to choosing "Selective Active" under the "Actions" pull down. The current active partition is marked with a lightening bolt.

Define a New System Partition

The sixth icon brings up a "Define System Partition" dialog box which is actually the "Definition" page in a new system partition's notebook. You can specify the name, description, and color of the new partition. Of course, this new partition has no nodes yet, because you must first perform a "Place selected nodes ..." for this new partition. The new partition is also set as the active one to prepare for specifying member nodes.

Remove Selected System Partition

The seventh icon deletes the selected system partition from the current layout. If the selected partition has nodes assigned and is currently the active partition, you cannot delete the partition until all nodes of the partition have been reassigned to another partition(s). If the selected partition has no nodes assigned and is currently the active partition, it cannot be deleted until a different partition becomes the active partition.

Sort the Objects in the Current Pane

The eighth icon sorts the node or system partition objects in the respective pane, depending on which pane is currently active. For the Nodes pane, this makes sense and is only available for use if the icon view of the nodes has been set via the "View" Pull Down Menu item. The icon view dispenses with frames and simply represents all the nodes as independent entities. The icon view of the Nodes pane has been selected in Figure 41 on page 183, and the nodes have sorted in descending order.

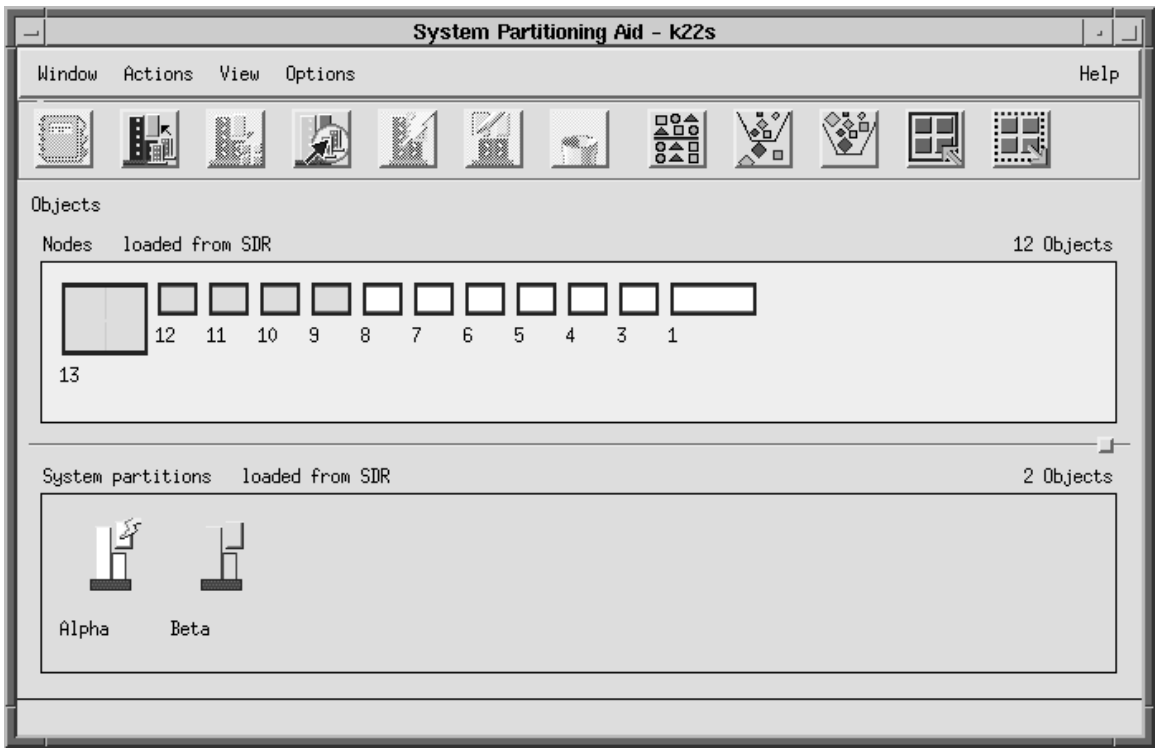

Figure 41. Descending sort in Nodes pane (Icon View)

Filter the Objects in the Current Pane

The ninth icon allows you to define a filter, and uses that filter to control which objects in the active pane are seen. In our example, if the node pane is selected, specifying the filter "1*" for inclusion as shown in Figure 42 on page 184 causes the frame to be redrawn with only nodes 1, 10, 11, 12, and 13 shown. Alternatively, you may select those nodes in the Nodes pane, and choose the "Filter by what is selected" option on the "Filter Nodes" dialog window.

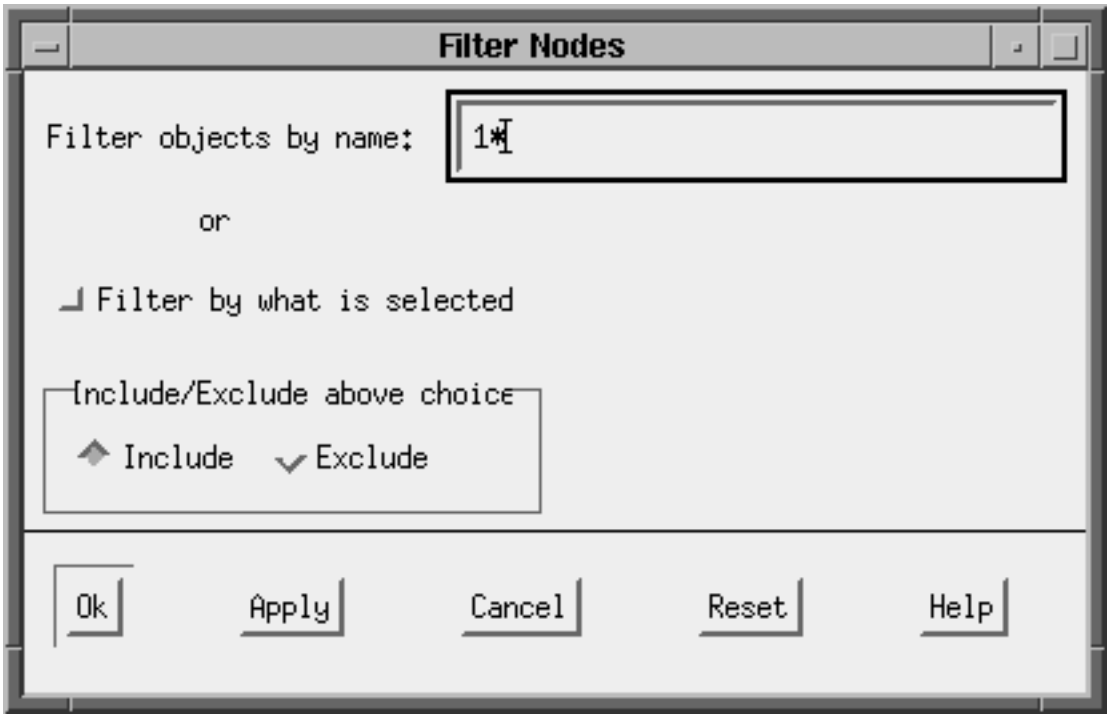

Figure 42. Filter menu with "1" filter specified for Nodes pane*

If you select the System partitions pane, specifying the filter B* for inclusion results in only the Beta system partition being shown: both in the Nodes pane and the partitions pane. A filter may be imposed on each pane.

Remove Any Filter Being Applied to the Objects in the Current Pane

The tenth icon undoes any filtering for the currently active pane.

Select All Objects in the Current Pane

The eleventh icon applies only to the Nodes pane. It marks all the nodes as if they had been sequentially selected. Then, you may deselect nodes one at a time to achieve the desired combination.

Deselect all Objects in the Current Pane

The twelfth icon also applies only to the Nodes pane. It clears all selections from the pane so you can start from the beginning again.

The CLI - "sysparaid"

Use the command **sysparaid** to verify the validity of a system partitioning configuration without invoking the GUI. Optionally, you may request the corresponding layout files be constructed and saved for activation later.

The CLI **sysparaid** is invoked by the GUI **spsyspar** to handle a graphically specified layout. In that case the **spsyspar** code constructs the necessary input data and option specifications for the user.

When working with **sysparaid** directly, you must provide these inputs and options. The syntax for the CLI is shown below. For complete syntax, refer to "SP Command and Technical Reference".

```
sysparaid [-s layout_name | a_fully_qualified_path]
 input_file [topology_file]
```

where

- *input_file*

  is the input file specifying the system partitions.

- *topology_file*

  is an optional topology file to be used in evaluating the candidate system partitioning layout. This file is the master topology file for the target system, and is necessary when this file is not present in the **/spdata/sys1/syspar_configs/topologies** directory.

- -s

  Specifies that the configuration layout data is to be saved for later use. If *layout_name* is specified as a simple string, the results are stored at the appropriate location in the system partition directory tree, under the directory named layout.*layout_name*. If *a_fully_qualified_path* is specified, the results are stored at that location only.

The input file must specify the size of the system, number of partitions to be used, which nodes are in which partition and so on. The format of the input file is shown in Figure 43 on page 186 and the file shown is shipped with PSSP in **ssp.top** as "inpfile.template" in the directory **/spdata/sys1/syspar_configs/bin**.

Recall the Sample System of Figure 36 on page 177, and the Alpha and Beta partitions of Figure 37 on page 178. An input file for **sysparaid** which specifies that layout is the file "my_part_in" presented in Figure 44 on page 186.

```
This file is a template for the input file to the System Partitioning Aid.
Copy this into a new file,  fill all fields as described.
Frame Type of 16 slot frames is tall and that of 8 slot frames is short.
Select one of the four keywords provided for Switch type.
Nodes may be identfied using either node numbers or switch port
numbers.
Select one of the two options provided for Node Numbering Scheme.
System Partition Name, Number of Nodes in the System Partition
and list of nodes in the System Partition must be provided for
all system partitions. The node list can be provided in one of
the following formats:
      - A list with one entry on each line
      - A range of the form X - Y
      - A combination of the above options
      - For the last partition the keyword remaining_nodes may be
        used provided all nodes or switch ports not in the last
        system partition have been specified in other system
        partitions.
Comment lines enclosed between /* and */ may be deleted.
New comments may be added provided they follow the comment
convention.
*********************************************************************
   Number of Nodes in System:
   Number of Frames in System:
   Frame Type: tall   short
   Switch Type:  HiPS   SP   LC8   SP8   NA
   Number of Switches in Node Frames:
   Number of Switches in Switch Only Frames:
   Number of System Partitions:
   Node Numbering Scheme:  node_number    switch_port_number
   System Partition Name:
   Number of Nodes in System Partition:
   List of nodes in system partition
```

Figure 43. inpfile.template provided with PSSP

```
   Number of Nodes in System:  12
   Number of Frames in System:  1
   Frame Type:  tall
    Switch Type:  SP
       Number of Switches in Node Frames:  1
       Number of Switches in Switch Only Frames:  0
       Number of System Partitions:  2
       Node Numbering Scheme:  node_number
       System Partition Name:  Alpha
       Number of Nodes in System Partition:  7
       List of nodes in system partition
       1
       3 - 8
       System Partition Name:  Beta
       Number of Nodes in System Partition:  5
       List of nodes in system partition
       9 - 13
```

Figure 44. my_part_in file.

You could execute **sysparaid** as follows to check for validity:

```
sysparaid  my_part_in
```

(If the global system topology file is not present in the **/spdata/sys1/syspar_configs/topologies** directory, you must provide that topology file.) **sysparaid** examines the inputs and recognizes that this layout is equivalent to the layout shipped by IBM as:

/spdata/sys1/syspar_configs/1nsb0isb/config.8_8/layout.3

If **sysparaid** did not find an existing equivalent layout, it would report that the layout is valid, and you could rerun **sysparaid** specifying the **-s** (save) option with a directory in which to place the results. The results would consist of

layout.desc	file describing this system partitioning layout;
nodes.syspar	file with shorthand listing of partition contents;
spa.snapshot	file listing ownership of switch chips by partition;
syspar.1.Alpha	directory for Alpha - node list, topology, snapshot, metrics files;
syspar.2.Beta	directory for Beta - node list, topology, snapshot, metrics files.

Example 3 of Chapter 5

The picture of the 3-frame system discussed in Chapter 5 is reproduced in Figure 45 on page 188 below. Suppose you plan to have this system at some point in the future, and wish to partition it in the manner described in “Example 3 - An SP with 3 frames, 2 switches, and various node sizes” on page 114:

```
Partition 1 - F1N01, F2N01, F1N05, F2N05,
              F1N03, F2N07
Partition 2 - F1N09, F1N13, F2N13
              F1N11, F2N11
Partition 3 - F3N01, F3N02, F3N05, F3N06,
              F3N03, F3N07,
              F3N09, F3N13
```

This layout is not one of those shipped by IBM, and so you would create it using the System Partitioning Aid. Further, if this system is not "in hand", then **spsyspar** cannot picture the system correctly, and shows only thin nodes.

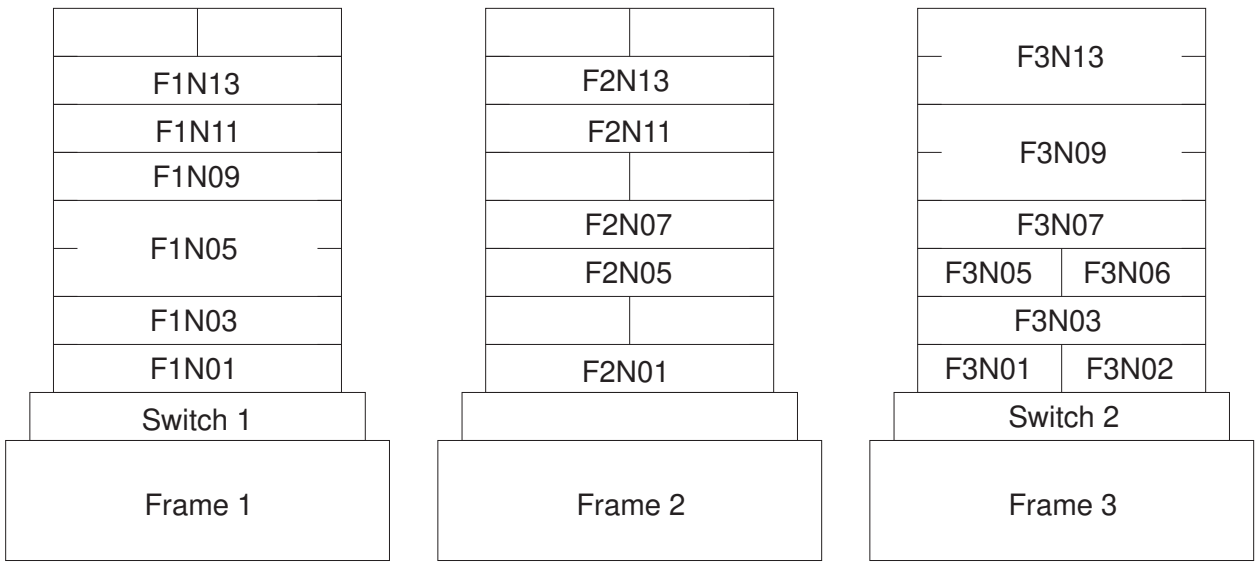

Figure 45. Three frames with 2 switches

1. Start by bringing up **spsyspar**.
2. Click on the "Display previously defined ..." icon. (The second Tool Bar icon.)
3. Select the "2 16 port switches" and select the "32" configuration. You find there is only one such layout. Select this layout and open it. You now have a 2-frame, 32-node system as shown in Figure 46 on page 189. The system partition name "alice blue" is a default choice, which matches the default color chosen by the tool.

Understand that the first frame in the figure really represents both of Frames 1 and 2: Frame 2 is an expansion frame for Frame 1 since it shares Frame 1's switch. Also, the nodes in the second frame pictured would be in Frame 3 of the real system, and would be numbered starting at 33, rather than 16. Once you complete this exercise, you will save a layout which you can use correctly once the real system is available. Partitioning is based on switch chips, not on node numbers.

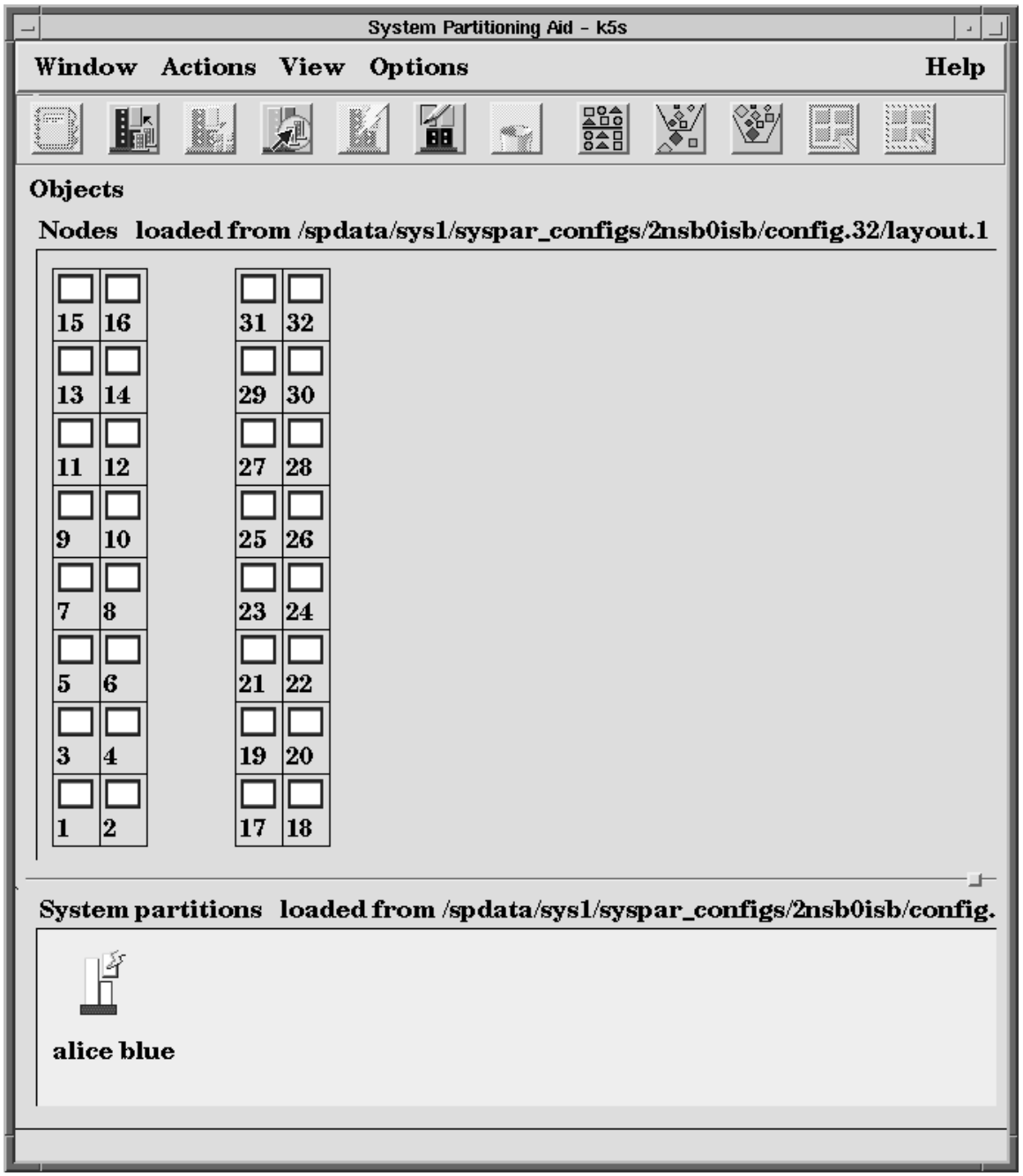

Figure 46. Main Window for Example 3 of Chapter 5

Your objective for system partitions is to divide the system pictured in Figure 46 into 3 pieces: the lower half of Frame 1, the upper half of Frame 1, and Frame 2. You may perform the following tasks to accomplish this, and arrive at Figure 47 on page 191:

1. In the notebook for the existing partition (the default partition) change the partition name to "Par1".
2. Select the "Define a new system partition" icon (the one with the pencil) and define a new partition with name "Par2".
3. Repeat the previous step for "Par3".

4. Make Par2 active. (Use the lightning bolt icon)
5. Select node 9 and then assign it to Par2. (Third icon.) Note that nodes 9, 10, 13 and 14 move to Par2 because they all connect to the same switch chip.
6. Select on node 12, and then assign it to Par2. (Third icon.) Nodes 11, 15 and 16 also join Par2.
7. Make Par3 active. (Use the lightning bolt icon)
8. Select nodes 21, 23, 25, and 27, and assign these nodes to Par3 by clicking on the third icon. Notice that all the Frame 3 nodes are placed in Par3 due to the sharing of switch chips.

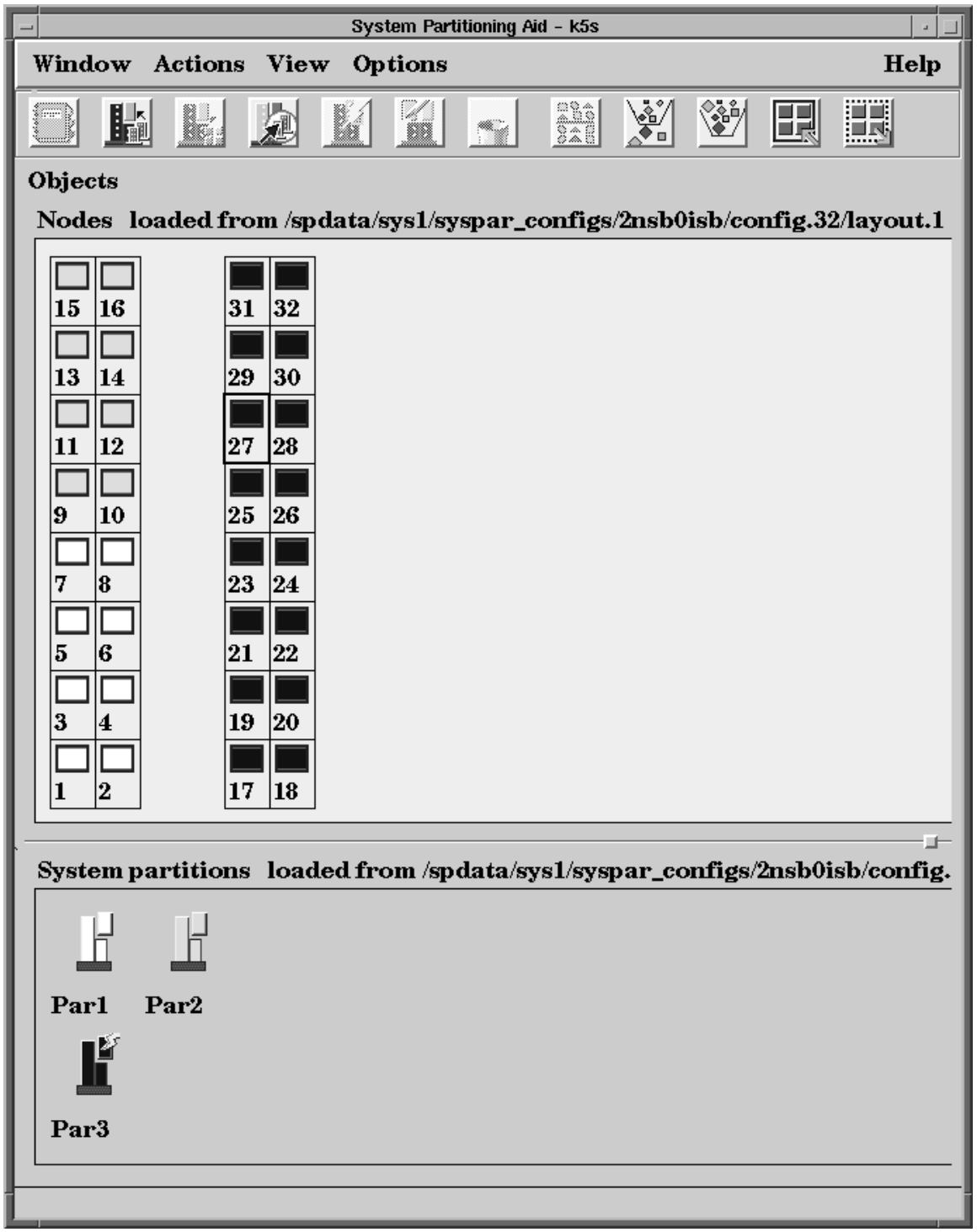

Figure 47. System Partitioning for Example 3 of Chapter 5

To make the system represented look more like our system, you can use filtering on the Nodes pane. To do this, follow these steps:

1. Select all the nodes which should be in the system.
2. Select the filtering icon, and choose "Filter by what is selected."

The result is depicted in Figure 48 on page 192. For the real system, Nodes 5, 25 and 29 will be high. Figure 48 on page 192 looks good in this respect. However, Nodes 6 and 8 distort our perception of Node 5.

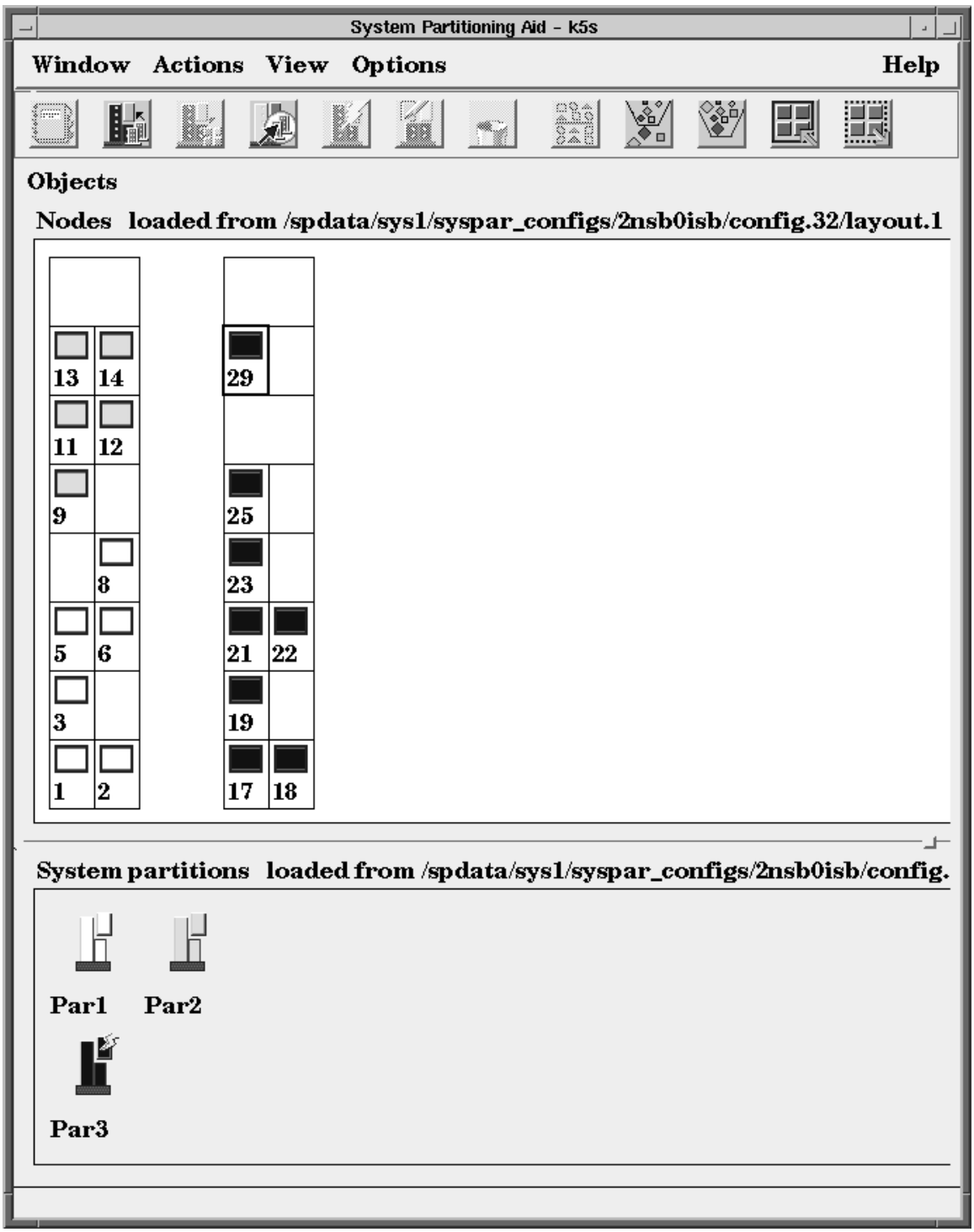

Figure 48. System Partitioning for Example 3 of Chapter 5

Validate and save the new layout by clicking on the fourth Tool Bar icon, "Generate files used to define system configuration." The resulting window appears in

Figure 49 on page 193. The code wants to store this new layout as an 8_8_16 configuration of a 2nsb0isb system, which is correct. (If you remove the filter you applied earlier, you indeed see partitions of 8, 8 and 16 nodes.) You can choose the directory extension, (the example uses directory extension "mine_1"). Therefore, the name of the directory containing the new layout is "layout.mine_1".

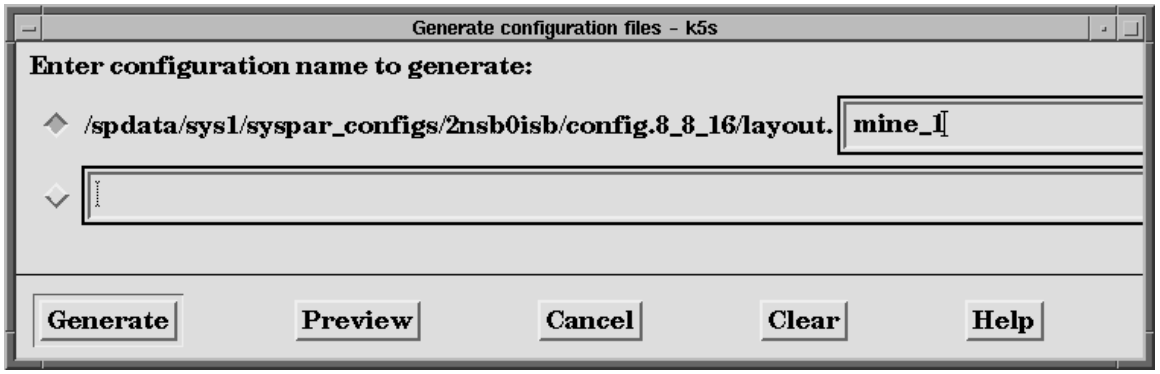

Figure 49. Dialog box for specifying name of new layout

Click on "Generate" and receive the message in the following figure. Note the warning about losing the configuration. You should backup the layouts you create before reinstalling PSSP or **ssp.top**.

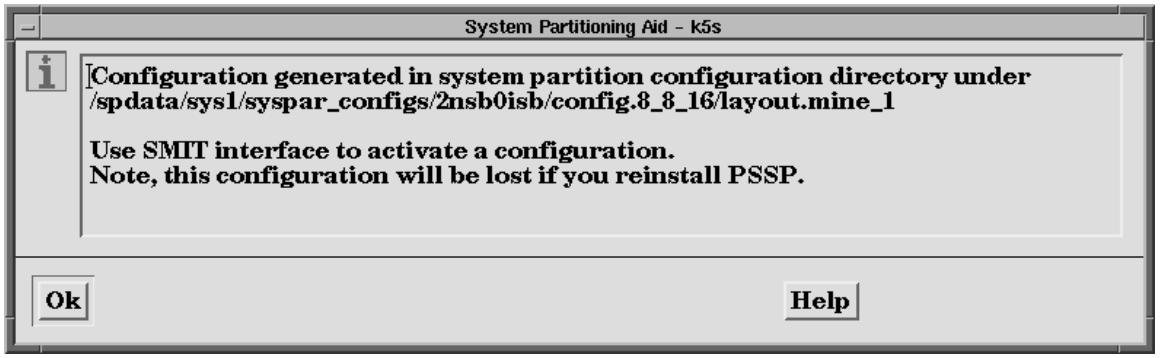

Figure 50. Message issued when new layout has been saved

The CLI

Recall that the GUI (**spsyspar**) invokes the CLI (**sysparaid**) to validate and save a new layout. The previous GUI activity finished the job by issuing the command:

```
spsyspar  -s mine_1  inputfile
```

where `inputfile` is as shown in Figure 51 on page 194. (**spsyspar** chooses the correct global topology file based on the "Number of Switches ..." entries in this input file.)

```
Number of Nodes in System:  32
Number of Frames in System:  2
Frame Type:  tall
Switch Type:  SP
Number of Switches in Node Frames:  2
Number of Switches in Switch Only Frames:  0
Number of System Partitions:  3
Node Numbering Scheme:  switch_port_number
System Partition Name:  Par1
Number of Nodes in System Partition:  8
0-7
System Partition Name:  Par2
Number of Nodes in System Partition:  8
8 - 15
System Partition Name:  Par3
Number of Nodes in System Partition:  16
16 - 31
```

Figure 51. CLI input file from "spsyspar"

If you use the CLI directly, you can use an input file similar to that in Figure 51, but representing the facts more precisely:

- The system has 3 frames and 2 switches.
- Existing nodes in the bottom half of Frames 1 and 2 are in Par1.
- Existing nodes in the top of Frames 1 and 2 are in Par2.
- Existing nodes in Frame 3 are in Par3.

Figure 52 on page 195 is the appropriate input file.

```
Number of Nodes in System:  19
Number of Frames in System:  3
Frame Type:  tall
Switch Type:  SP
Number of Switches in Node Frames:  2
Number of Switches in Switch Only Frames:  0
Number of System Partitions:  3
Node Numbering Scheme:  switch_port_number
System Partition Name:  Par1
Number of Nodes in System Partition:  6
0-2
4-6
System Partition Name:  Par2
Number of Nodes in System Partition:  5
8
10-13
System Partition Name:  Par3
Number of Nodes in System Partition:  8
16 - 18
20 - 22
24
28
```

Figure 52. Alternate CLI input file

Other files and data

When you save a new layout, supplemental files are saved in the respective directory. These include chip allocation files and performance files. For example, if you look at the **layout.mine_1** directory saved earlier, the **syspar.2.Par1** subdirectory contains the files **spa.snapshot** and **spa.metrics**.

The spa.snapshot data is available for viewing in the GUI as the "Chip Allocation" page of Par1's notebook. (First icon.) This GUI presentation is produced in Figure 53 on page 196. Par1 is completely contained in Frames 1 and 2 and so only uses Switch 1, denoted NSB 1 (Node Switch Board 1) in spa.snapshot. The 2 chips on the left are the node-attached chips, and the 2 chips on the right provide connectivity between those chips. A rule which **sysparaid** adheres to is any 2 node chips in a partition must have 2 link switch chips through which to communicate. This guarantees minimal, acceptable bandwidth and reliability characteristics.

A summary of the chip assignments for all partitions is stored in an spa.snapshot file at the layout.mine_1 directory level.

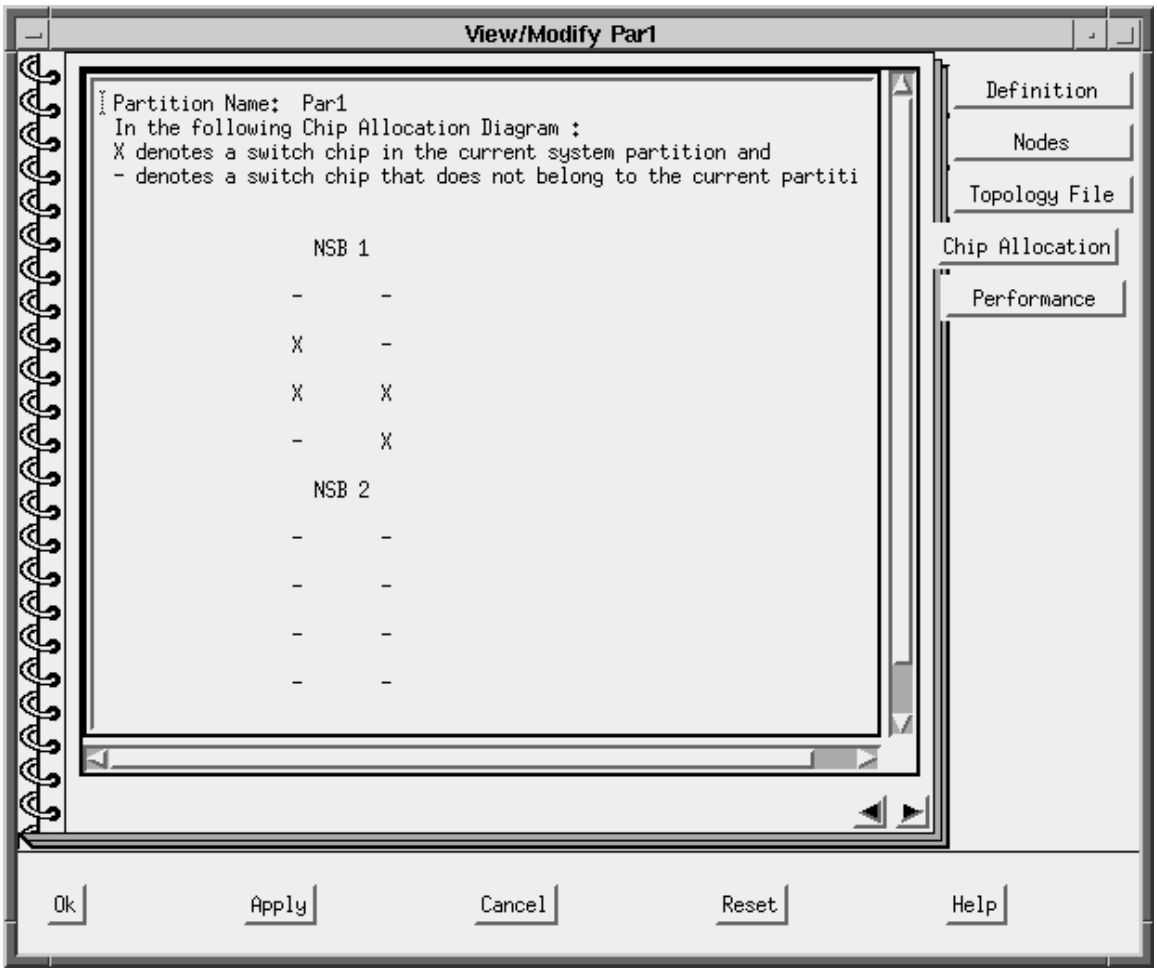

Figure 53. Switch chips allocated to system partition Par1

The spa.metrics data is available in the GUI on the "Performance" page of Par1's notebook. This GUI presentation is given in Figure 54 on page 197. Chips 5 and 6 are the node chips of Figure 53. The bandwidth numbers for Par1 are less than 100%. This measure is a comparison to the unpartitioned case where all 4 link switch chips would be available for the nodes on chips 5 and 6 to communicate through. So, in some cases, total traffic throughput between nodes of Par1 is cut by as much as half from the unpartitioned case. On average, that communication is only cut to 87.5%, since some of the nodes are on the same chip.

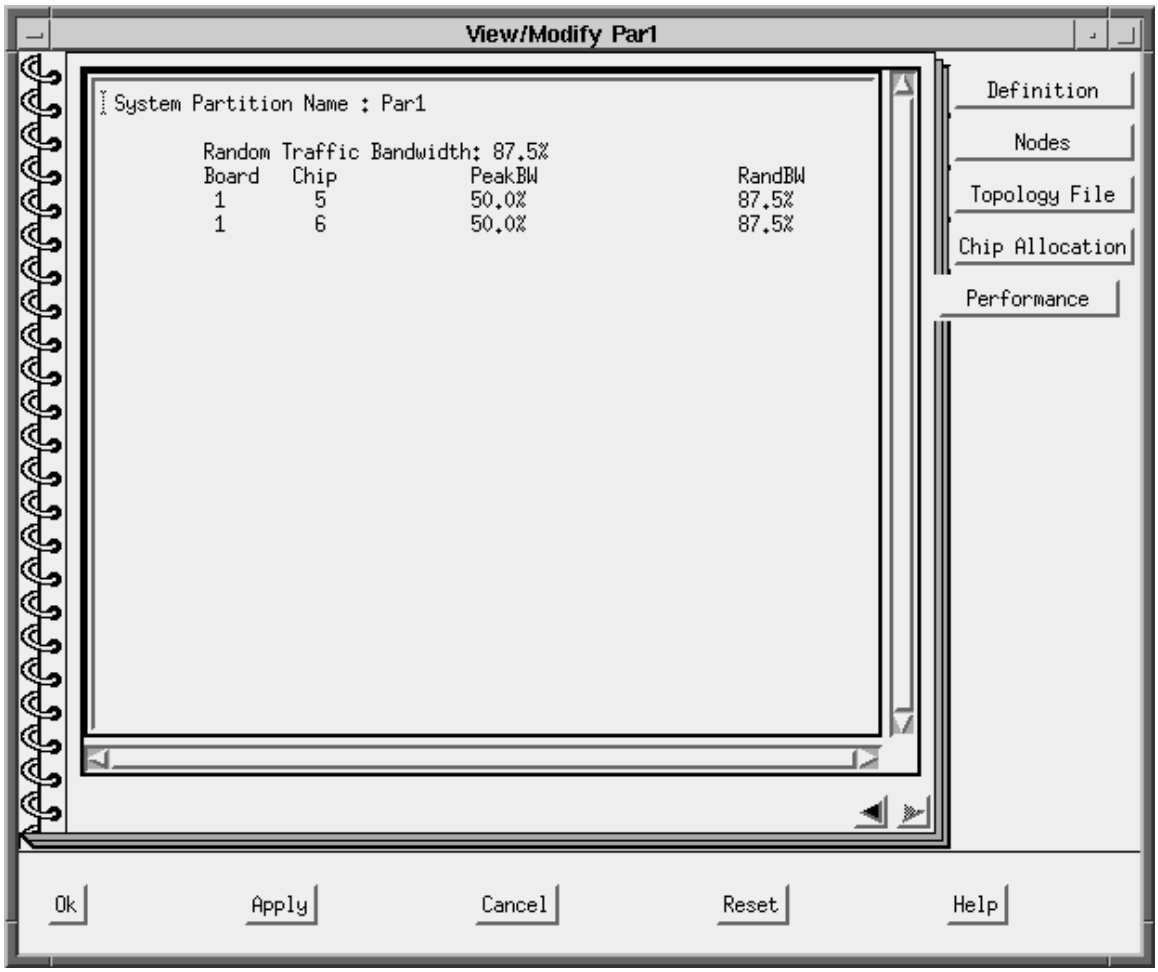

Figure 54. Performance numbers for system partition Par1

Appendix B. System Partitioning

This appendix contains a description for each of the system partitioning layouts, ordered by system size, that IBM provides.

8 Switch Port System

Layout for 4_4 Partition of 8 Switch Port System with a SP Switch-8

This layout is the only layout choice for a 4_4 system partition configuration of an 8 switch port system with no intermediate switch boards.

Layout 1

This is the description of the only layout choice for a 4_4 system partition configuration of an 8 switch port system with no intermediate switch boards.

Partition 1 contains switch_port_numbers: 0, 1, 4, 5

Partition 2 contains switch_port_numbers: 2, 3, 6, 7

Layout for 8 Partition of 8 Switch Port System with a SP Switch-8

This layout is the only layout choice for an 8 system partition configuration of an 8 switch port system with no intermediate switch boards.

Layout 1

This is the description of the only layout choice for an 8 system partition configuration of an 8 switch port system with no intermediate switch boards.

Partition 1 contains switch_port_numbers: 0 - 7

16 Switch Port System

Layouts for 8_8 Partition of 16 Switch Port System

The following are the layout choices for an 8_8 system partition of a 16 switch port system with no intermediate switch boards:

Layout 1

This is the description of one of the layout choices for an 8_8 system partition configuration of a 16 switch port system with no intermediate switch boards.

Partition 1 contains switch_port_numbers: 0, 1, 4, 5, 8, 9, 12, 13

Partition 2 contains switch_port_numbers: 2, 3, 6, 7, 10, 11, 14, 15

© Copyright IBM Corp. 1997

Layout 2

This is the description of the layout choices for an 8_8 system partition configuration of a 16 switch port system with no intermediate switch boards.

Partition 1 contains switch_port_numbers: 0, 1, 4, 5, 10, 11, 14, 15

Partition 2 contains switch_port_numbers: 2, 3, 6 - 9, 12, 13

Layout 3

Partition 1 contains switch_port_numbers: 0 - 7

Partition 2 contains switch_port_numbers: 8 - 15

Layouts for 4_4_8 Partition of 16 Switch Port System

The following are the layout choices for a 4_4_8 system partition of a 16 switch port system with no intermediate switch boards.

Layout 1

This is the description of the layout choices for a 4_4_8 system partition configuration of a 16 switch port system with no intermediate switch boards.

Partition 1 contains switch_port_numbers: 0, 1, 4, 5

Partition 2 contains switch_port_numbers: 8, 9, 12, 13

Partition 3 contains switch_port_numbers: 2, 3, 6, 7, 10, 11, 14, 15

Layout 2

This is the description of the layout choices for a 4_4_8 system partition configuration of a 16 switch port system with no intermediate switch boards.

Partition 1 contains switch_port_numbers: 0, 1, 4, 5

Partition 2 contains switch_port_numbers: 2, 3, 6, 7

Partition 3 contains switch_port_numbers: 8 - 15

Layout 3

This is the description of the layout choices for a 4_4_8 system partition configuration of a 16 switch port system with no intermediate switch boards.

Partition 1 contains switch_port_numbers: 0, 1, 4, 5

Partition 2 contains switch_port_numbers: 10, 11, 14, 15

Partition 3 contains switch_port_numbers: 2, 3, 6 - 9, 12, 13

Layout 4

This is the description of the layout choices for a 4_4_8 system partition configuration of a 16 switch port system with no intermediate switch boards.

Partition 1 contains switch_port_numbers: 2, 3, 6, 7

Partition 2 contains switch_port_numbers: 8, 9, 12, 13

Partition 3 contains switch_port_numbers: 0, 1, 4, 5, 10, 11, 14, 15

Layout 5

Partition 1 contains switch_port_numbers: 2, 3, 6, 7

Partition 2 contains switch_port_numbers: 10, 11, 14, 15

Partition 3 contains switch_port_numbers: 0, 1, 4, 5, 8, 9, 12, 13

Layout 6

This is the description of the layout choices for a 4_4_8 system partition configuration of a 16 switch port system with no intermediate switch boards.

Partition 1 contains switch_port_numbers: 8, 9, 12, 13

Partition 2 contains switch_port_numbers: 10, 11, 14, 15

Partition 3 contains switch_port_numbers: 0 - 7

Layouts for 4_12 Partition of 16 Switch Port System

The following are the layout choices for a 4_12 system partition of a 16 switch port system.

Layout 1

This is the description of the layout choices for a 16 switch port system with no intermediate switch boards.

Partition 1 contains switch_port_numbers: 0, 1, 4, 5

Partition 2 contains switch_port_numbers: 2, 3, 6 - 15

Layout 2

This is the description of the layout choices for a 4_12 system partition configuration of a 16 switch port system with no intermediate switch boards.

Partition 1 contains switch_port_numbers: 8, 9, 12, 13

Partition 2 contains switch_port_numbers: 0 - 7, 10, 11, 14, 15

Layout 3

This is the description of the layout choices for a 16 switch port system with no intermediate switch boards.

Partition 1 contains switch_port_numbers: 2, 3, 6, 7

Partition 2 contains switch_port_numbers: 0, 1, 4, 5, 8 - 15

Layout 4

This is the description of the layout choices for a 4_12 system partition configuration of a 16 switch port system with no intermediate switch boards.

Partition 1 contains switch_port_numbers: 10, 11, 14, 15

Partition 2 contains switch_port_numbers: 0 - 9, 12, 13

Layouts for 4_4_4_4 Partition of 16 Switch Port System

This layout is the only layout choice for a 4_4_4_4 system partition of a 16 switch port system.

Layout 1

This is the description of the layout choices for a 4_4_4_4 system partition configuration of a 16 switch port system with no intermediate switch boards.

Partition 1 contains switch_port_numbers: 0, 1, 4, 5

Partition 2 contains switch_port_numbers: 8, 9, 12, 13

Partition 3 contains switch_port_numbers: 2, 3, 6, 7

Partition 4 contains switch_port_numbers: 10, 11, 14, 15

Layouts for 16 Partition of 16 Switch Port System

This layout is the only layout choice for a 16 system partition of an 16 switch port system.

Layout 1

This is the description of the layout choices for a 16 system partition configuration of a 16 switch port system with no intermediate switch boards.

Partition 1 contains switch_port_numbers: 0 - 15

---

32 Switch Port System

Layouts for 8_24 Partition of 32 Switch Port System

The following are the layout choices for an 8_24 system partition of a 32 switch port system.

Layout 1

This is the description of the layout choices for an 8_24 system partition configuration of a 32 switch port system with no intermediate switch boards.

Partition 1 contains switch_port_numbers: 0, 1, 4, 5, 8, 9, 12, 13

Partition 2 contains switch_port_numbers: 2, 3, 6, 7, 10, 11, 14 - 31

Layout 2

This is the description of the layout choices for an 8_24 system partition configuration of a 32 switch port system with no intermediate switch boards.

Partition 1 contains switch_port_numbers: 2, 3, 6, 7, 10, 11, 14, 15

Partition 2 contains switch_port_numbers: 0, 1, 4, 5, 8, 9, 12, 13, 16 - 31

Layout 3

This is the description of the layout choices for an 8_24 system partition configuration of a 32 switch port system with no intermediate switch boards.

Partition 1 contains switch_port_numbers: 0, 1, 4, 5, 10, 11, 14, 15

Partition 2 contains switch_port_numbers: 2, 3, 6 - 9, 12, 13, 16 - 31

Layout 4

This is the description of the layout choices for an 8_24 system partition configuration of a 32 switch port system with no intermediate switch boards.

Partition 1 contains switch_port_numbers: 2, 3, 6 - 9, 12, 13

Partition 2 contains switch_port_numbers: 0, 1, 4, 5, 10, 11, 14 - 31

Layout 5

This is the description of the layout choices for an 8_24 system partition configuration of a 32 switch port system with no intermediate switch boards.

Partition 1 contains switch_port_numbers: 8 - 15

Partition 2 contains switch_port_numbers: 0 - 7, 16 - 31

Layout 6

This is the description of the layout choices for an 8_24 system partition configuration of a 32 switch port system with no intermediate switch boards.

Partition 1 contains switch_port_numbers: 0 - 7

Partition 2 contains switch_port_numbers: 8 - 31

Layout 7

This is the description of the layout choices for an 8_24 system partition configuration of a 32 switch port system with no intermediate switch boards.

Partition 1 contains switch_port_numbers: 16, 17, 20, 21, 24, 25, 28, 29

Partition 2 contains switch_port_numbers: 0 - 15, 18, 19, 22, 23, 26, 27, 30, 31

Layout 8

This is the description of the layout choices for an 8_24 system partition configuration of a 32 switch port system with no intermediate switch boards.

Partition 1 contains switch_port_numbers: 18, 19, 22, 23, 26, 27, 30, 31

Partition 2 contains switch_port_numbers: 0 - 17, 20, 21, 24, 25, 28, 29

Layout 9

This is the description of the layout choices for an 8_24 system partition configuration of a 32 switch port system with no intermediate switch boards.

Partition 1 contains switch_port_numbers: 16, 17, 20, 21, 26, 27, 30, 31

Partition 2 contains switch_port_numbers: 0 - 15, 18, 19, 22 - 25, 28, 29

Layout 10

This is the description of the layout choices for an 8_24 system partition configuration of a 32 switch port system with no intermediate switch boards.

Partition 1 contains switch_port_numbers: 18, 19, 22 - 25, 28, 29

Partition 2 contains switch_port_numbers: 0 - 17, 20, 21, 26, 27, 30, 31

Layout 11

This is the description of the layout choices for an 8_24 system partition configuration of a 32 switch port system with no intermediate switch boards.

Partition 1 contains switch_port_numbers: 24 - 31

Partition 2 contains switch_port_numbers: 0 - 23

Layout 12

This is the description of the layout choices for an 8_24 system partition configuration of a 32 switch port system with no intermediate switch boards.

Partition 1 contains switch_port_numbers: 16 - 23

Partition 2 contains switch_port_numbers: 0 - 15, 24 - 31

Layouts for 4_28 Partition of 32 Switch Port System

The following are the layout choices for a 4_28 system partition of a 32 switch port system.

Layout 1

This is the description of the layout choices for a 4_28 system partition configuration of a 32 switch port system with no intermediate switch boards.

Partition 1 contains switch_port_numbers: 0, 1, 4, 5

Partition 2 contains switch_port_numbers: 2, 3, 6 - 31

Layout 2

This is the description of the layout choices for a 4_28 system partition configuration of a 32 switch port system with no intermediate switch boards.

Partition 1 contains switch_port_numbers: 8, 9, 12, 13

Partition 2 contains switch_port_numbers: 0 - 7, 10, 11, 14 - 31

Layout 3

This is the description of the layout choices for a 4_28 system partition configuration of a 32 switch port system with no intermediate switch boards.

Partition 1 contains switch_port_numbers: 2, 3, 6, 7

Partition 2 contains switch_port_numbers: 0, 1, 4, 5, 8 - 31

Layout 4

This is the description of the layout choices for a 4_28 system partition configuration of a 32 switch port system with no intermediate switch boards.

Partition 1 contains switch_port_numbers: 10, 11, 14, 15

Partition 2 contains switch_port_numbers: 0 - 9, 12, 13, 16 - 31

Layout 5

This is the description of the layout choices for a 4_28 system partition configuration of a 32 switch port system with no intermediate switch boards.

Partition 1 contains switch_port_numbers: 16, 17, 20, 21

Partition 2 contains switch_port_numbers: 0 - 15, 18, 19, 22 - 31

Layout 6

This is the description of the layout choices for a 4_28 system partition configuration of a 32 switch port system with no intermediate switch boards.

Partition 1 contains switch_port_numbers: 24, 25, 28, 29

Partition 2 contains switch_port_numbers: 0 - 23, 26, 27, 30, 31

Layout 7

This is the description of the layout choices for a 4_28 system partition configuration of a 32 switch port system with no intermediate switch boards.

Partition 1 contains switch_port_numbers: 18, 19, 22, 23

Partition 2 contains switch_port_numbers: 0 - 17, 20, 21, 24 - 31

Layout 8

This is the description of the layout choices for a 4_28 system partition configuration of a 32 switch port system with no intermediate switch boards.

Partition 1 contains switch_port_numbers: 26, 27, 30, 31

Partition 2 contains switch_port_numbers: 0 - 25, 28, 29

Layouts for 16_16 Partition of 32 Switch Port System

This layout is the only layout choice for a 16_16 system partition of a 32 switch port system.

Layout 1

This is the description of the layout choices for a 16_16 system partition configuration of a 32 switch port system with no intermediate switch boards.

Partition 1 contains switch_port_numbers: 0 - 15

Partition 2 contains switch_port_numbers: 16 - 31

Layouts for 32 Partition of 32 Switch Port System

This layout is the only layout choice for a 32 system partition of a 32 switch port system.

Layout 1

This is the description of the layout choices for a 32 system partition configuration of a 32 switch port system with no intermediate switch boards.

Partition 1 contains switch_port_numbers: 0 - 31

---

48 Switch Port System

Layouts for 16_32 Partition of 48 Switch Port System

The following are the layout choices for a 16_32 system partition of a 48 switch port system.

Layout 1

This is the description of the layout choices for a 16_32 system partition configuration of a 48 switch port system with no intermediate switch boards.

Partition 1 contains switch_port_numbers: 0 - 31

Partition 2 contains switch_port_numbers: 32 - 47

Layout 2

This is the description of the layout choices for a 16_32 system partition configuration of a 48 switch port system with no intermediate switch boards.

Partition 1 contains switch_port_numbers: 0 - 15, 32 - 47

Partition 2 contains switch_port_numbers: 16 - 31

Layout 3

This is the description of the layout choices for a 16_32 system partition configuration of a 48 switch port system with no intermediate switch boards.

Partition 1 contains switch_port_numbers: 16 - 47

Partition 2 contains switch_port_numbers: 0 - 15

Layouts for 48 Partition of 48 Switch Port System

This layout is the only layout choice for a 48 system partition of a 48 switch port system.

Layout 1

This is the description of the layout choices for a 48 system partition configuration of a 48 switch port system with no intermediate switch boards.

Partition 1 contains switch_port_numbers: 0 - 47

---

64 Switch Port System

Layouts for 16_48 Partition of 64 Switch Port System

The following are the layout choices for a 16_48 system partition of a 64 switch port system.

Layout 1

This is the description of the layout choices for a 16_48 system partition configuration of a 64 switch port system with no intermediate switch boards.

Partition 1 contains switch_port_numbers: 0 - 47

Partition 2 contains switch_port_numbers: 48 - 63

Layout 2

This is the description of the layout choices for a 16_48 system partition configuration of a 64 switch port system with no intermediate switch boards.

Partition 1 contains switch_port_numbers: 0 - 31, 48 - 63

Partition 2 contains switch_port_numbers: 32 - 47

Layout 3

This is the description of the layout choices for a 16_48 system partition configuration of a 64 switch port system with no intermediate switch boards.

Partition 1 contains switch_port_numbers: 0 - 15, 32 - 63

Partition 2 contains switch_port_numbers: 16 - 31

Layout 4

This is the description of the layout choices for a 16_48 system partition configuration of a 64 switch port system with no intermediate switch boards.

Partition 1 contains switch_port_numbers: 16 - 63

Partition 2 contains switch_port_numbers: 0 - 15

Layouts for 32_32 Partition of 64 Switch Port System

The following are the layout choices for a 32_32 system partition of a 64 switch port system.

Layout 1

This is the description of the layout choices for a 32_32 system partition configuration of a 64 switch port system with no intermediate switch boards.

Partition 1 contains switch_port_numbers: 0 - 31

Partition 2 contains switch_port_numbers: 32 - 63

Layout 2

This is the description of the layout choices for a 32_32 system partition configuration of a 64 switch port system with no intermediate switch boards.

Partition 1 contains switch_port_numbers: 0 - 15, 32 - 47

Partition 2 contains switch_port_numbers: 16 - 31, 48 - 63

Layout 3

This is the description of the layout choices for a 32_32 system partition configuration of a 64 switch port system with no intermediate switch boards.

Partition 1 contains switch_port_numbers: 0 - 15, 48 - 63

Partition 2 contains switch_port_numbers: 16 - 47

Layouts for 64 Partition of 64 Switch Port System

This layout is the only layout choice for a 64 system partition of a 64 switch port system.

Layout 1

This is the description of the layout choices for a 64 system partition configuration of a 64 switch port system with no intermediate switch boards.

Partition 1 contains switch_port_numbers: 0 - 63

---

80 Switch Port System With 0 Intermediate Switch Boards

Layouts for 16_64 Partition

The following are the layout choices for a 16_64 system partition of a 80 switch port system.

Layout 1

This is the description of the layout choices for a 16_64 system partition configuration of an 80 switch port system with no intermediate switch boards.

Partition 1 contains switch_port_numbers: 0 - 63

Partition 2 contains switch_port_numbers: 64 - 79

Layout 2

This is the description of the layout choices for a 16_64 system partition configuration of an 80 switch port system with no intermediate switch boards.

Partition 1 contains switch_port_numbers: 0 - 47, 64 - 79

Partition 2 contains switch_port_numbers: 48 - 63

Layout 3

This is the description of the layout choices for a 16_64 system partition configuration of an 80 switch port system with no intermediate switch boards.

Partition 1 contains switch_port_numbers: 0 - 31, 48 - 79

Partition 2 contains switch_port_numbers: 32 - 47

Layout 4

This is the description of the layout choices for a 16_64 system partition configuration of an 80 switch port system with no intermediate switch boards.

Partition 1 contains switch_port_numbers: 0 - 15, 32 - 79

Partition 2 contains switch_port_numbers: 16 - 31

Layout 5

This is the description of the layout choices for a 16_64 system partition configuration of an 80 switch port system with no intermediate switch boards.

Partition 1 contains switch_port_numbers: 16 - 79

Partition 2 contains switch_port_numbers: 0 - 15

Layouts for 32_48 Partition

The following are the layout choices for a 32_48 system partition of an 80 switch port system.

Layout 1

This is the description of the layout choices for a 32_48 system partition configuration of an 80 switch port system with no intermediate switch boards.

Partition 1 contains switch_port_numbers: 0 - 31

Partition 2 contains switch_port_numbers: 32 - 79

Layout 2

This is the description of the layout choices for a 32_48 system partition configuration of an 80 switch port system with no intermediate switch boards.

Partition 1 contains switch_port_numbers: 0 - 15, 32 - 47

Partition 2 contains switch_port_numbers: 16 - 31, 48 - 79

Layout 3

This is the description of the layout choices for a 32_48 system partition configuration of a 80 switch port system with no intermediate switch boards.

Partition 1 contains switch_port_numbers: 0 - 15, 48 - 63

Partition 2 contains switch_port_numbers: 16 - 47, 64 - 79

Layout 4

This is the description of the layout choices for a 32_48 system partition configuration of an 80 switch port system with no intermediate switch boards.

Partition 1 contains switch_port_numbers: 0 - 15, 64 - 79

Partition 2 contains switch_port_numbers: 16 - 63

Layout 5

This is the description of the layout choices for a 32_48 system partition configuration of an 80 switch port system with no intermediate switch boards.

Partition 1 contains switch_port_numbers: 16 - 47

Partition 2 contains switch_port_numbers: 0 - 15, 48 - 79

Layout 6

This is the description of the layout choices for a 32_48 system partition configuration of an 80 switch port system with no intermediate switch boards.

Partition 1 contains switch_port_numbers: 16 - 31, 48 - 63

Partition 2 contains switch_port_numbers: 0 - 15, 32 - 47, 64 - 79

Layout 7

This is the description of the layout choices for a 32_48 system partition configuration of an 80 switch port system with no intermediate switch boards.

Partition 1 contains switch_port_numbers: 16 - 31, 64 - 79

Partition 2 contains switch_port_numbers: 0 - 15, 32 - 63

Layout 8

This is the description of the layout choices for a 32_48 system partition configuration of an 80 switch port system with no intermediate switch boards.

Partition 1 contains switch_port_numbers: 32 - 63

Partition 2 contains switch_port_numbers: 0 - 31, 64 - 79

Layout 9

This is the description of the layout choices for a 32_48 system partition configuration of an 80 switch port system with no intermediate switch boards.

Partition 1 contains switch_port_numbers: 32 - 47

Partition 2 contains switch_port_numbers: 64 - 79

Layout 10

This is the description of the layout choices for a 32_48 system partition configuration of an 80 switch port system with no intermediate switch boards.

Partition 1 contains switch_port_numbers: 48 - 79

Partition 2 contains switch_port_numbers: 0 - 47

Layouts for 80 Partition

This layout is the only layout choice for an 80 system partition of an 80 switch port system.

Layout 1

This is the description of the layout choices for an 80 partition of an 80 switch port system with no intermediate switch boards.

Partition 1 contains switch_port_numbers: 0 - 79

---

80 Switch Port System With Intermediate Switch Boards

Layouts for 16_16_48 Partition

The following are the layout choices for a 16_16_48 system partition of an 80 switch port system.

Layout 1

This is the description of the layout choices for a 16_16_48 partition of an 80 switch port system with 4 intermediate switch boards.

Partition 1 contains switch_port_numbers: 0 - 15

Partition 2 contains switch_port_numbers: 16 - 63

Partition 3 contains switch_port_numbers: 64 - 79

Layout 2

This is the description of the layout choices for a 16_16_48 system partition configuration of an 80 switch port system with 4 intermediate switch boards.

Partition 1 contains switch_port_numbers: 16 - 31

Partition 2 contains switch_port_numbers: 0 - 15, 32 - 63

Partition 3 contains switch_port_numbers: 64 - 79

Layout 3

This is the description of the layout choices for a 16_16_48 partition of an 80 switch port system with 4 intermediate switch boards.

Partition 1 contains switch_port_numbers: 32 - 47

Partition 2 contains switch_port_numbers: 0 - 31, 48 - 63

Partition 3 contains switch_port_numbers: 64 - 79

Layout 4

This is the description of the layout choices for a 16_16_48 partition of an 80 switch port system with 4 intermediate switch boards.

Partition 1 contains switch_port_numbers: 48 - 63

Partition 2 contains switch_port_numbers: 0 - 47

Partition 3 contains switch_port_numbers: 64 - 79

Layouts for 16_64 Partition

The following are the layout choices for a 16_64 system partition of an 80 switch port system.

Layout 1

This is the description of the layout choices for a 16_64 partition of an 80 switch port system with 4 intermediate switch boards.

Partition 1 contains switch_port_numbers: 64 - 79

Partition 2 contains switch_port_numbers: 0 - 63

Layout 2

This is the description of the layout choices for a 16_64 partition of an 80 switch port system with 4 intermediate switch boards.

Partition 1 contains switch_port_numbers: 48 - 63

Partition 2 contains switch_port_numbers: 0 - 47, 64 - 79

Layout 3

This is the description of the layout choices for a 16_64 partition of an 80 switch port system with 4 intermediate switch boards.

Partition 1 contains switch_port_numbers: 32 - 47

Partition 2 contains switch_port_numbers: 0 - 31, 48 - 79

Layout 4

This is the description of the layout choices for a 16_64 partition of an 80 switch port system with 4 intermediate switch boards.

Partition 1 contains switch_port_numbers: 16 - 31

Partition 2 contains switch_port_numbers: 0 - 15, 32 - 79

Layout 5

This is the description of the layout choices for a 16_64 partition of an 80 switch port system with 4 intermediate switch boards.

Partition 1 contains switch_port_numbers: 0 - 15

Partition 2 contains switch_port_numbers: 16 - 79

Layouts for 80 Partition

This layout is the only layout choice for an 80 system partition of an 80 switch port system.

Layout 1

This is the description of the layout choices for an 80 system partition configuration of an 80 switch port system with 4 intermediate switch boards.

Partition 1 contains switch_port_numbers: 0 - 79

---

96 Switch Port System

Layouts for 32_64 Partition

This layout is the only layout choice for a 32_64 system partition of a 96 switch port system.

Layout 1

This is the description of the layout choices for a 32_64 system partition configuration of a 96 switch port system with 4 intermediate switch boards.

Partition 1 contains switch_port_numbers: 64 - 95

Partition 2 contains switch_port_numbers: 0 - 63

Layouts for 16_32_48 Partition

The following are the layout choices for a 16_32_48 system partition of a 96 switch port system.

Layout 1

This is the description of the layout choices for a 16_32_48 system partition configuration of a 96 switch port system with 4 intermediate switch boards.

Partition 1 contains switch_port_numbers: 0 - 15

Partition 2 contains switch_port_numbers: 16 - 63

Partition 3 contains switch_port_numbers: 64 - 95

Layout 2

This is the description of the layout choices for a 16_32_48 system partition configuration of a 96 switch port system with 4 intermediate switch boards.

Partition 1 contains switch_port_numbers: 16 - 31

Partition 2 contains switch_port_numbers: 0 - 15, 32 - 63

Partition 3 contains switch_port_numbers: 64 - 95

Layout 3

This is the description of the layout choices for a 16_32_48 system partition configuration of a 96 switch port system with 4 intermediate switch boards.

Partition 1 contains switch_port_numbers: 32 -47

Partition 2 contains switch_port_numbers: 0 - 31, 48 - 63

Partition 3 contains switch_port_numbers: 64 - 95

Layout 4

This is the description of the layout choices for a 16_32_48 system partition configuration of a 96 switch port system with 4 intermediate switch boards.

Partition 1 contains switch_port_numbers: 48 - 63

Partition 2 contains switch_port_numbers: 0 - 47

Partition 3 contains switch_port_numbers: 64 - 95

Layouts for 16_80 Partition

The following are the layout choices for a 16_80 system partition of a 96 switch port system.

Layout 1

This is the description of the layout choices for a 16_80 system partition configuration of a 96 switch port system with 4 intermediate switch boards.

Partition 1 contains switch_port_numbers: 0 - 15

Partition 2 contains switch_port_numbers: 16 - 95

Layout 2

This is the description of the layout choices for a 16_80 system partition configuration of a 96 switch port system with 4 intermediate switch boards.

Partition 1 contains switch_port_numbers: 16 - 31

Partition 2 contains switch_port_numbers: 0 - 15, 32 - 95

Layout 3

This is the description of the layout choices for a 16_80 system partition configuration of a 96 switch port system with 4 intermediate switch boards.

Partition 1 contains switch_port_numbers: 32 - 47

Partition 2 contains switch_port_numbers: 0 - 31, 48 - 95

Layout 4

This is the description of the layout choices for a 16_80 system partition configuration of a 96 switch port system with 4 intermediate switch boards.

Partition 1 contains switch_port_numbers: 48 - 63

Partition 2 contains switch_port_numbers: 0 - 47, 64 - 95

Layout 5

This is the description of the layout choices for a 16_80 system partition configuration of a 96 switch port system with 4 intermediate switch boards.

Partition 1 contains switch_port_numbers: 64 - 79

Partition 2 contains switch_port_numbers: 0 - 63, 80 - 95

Layout 6

This is the description of the layout choices for a 16_80 system partition configuration of a 96 switch port system with 4 intermediate switch boards.

Partition 1 contains switch_port_numbers: 80 - 95

Partition 2 contains switch_port_numbers: 0 - 79

Layouts for 96 Partition

This layout is the only layout choice for a 96 system partition of a 96 switch port system.

Layout 1

This is the description of the layout choices for a 96 system partition configuration of a 96 switch port system with 4 intermediate switch boards.

Partition 1 contains switch_port_numbers: 0 - 95

---

112 Switch Port System

Layouts for 48_64 Partition

This layout is the only layout choice for a 48_64 system partition of a 112 switch port system.

Layout 1

This is the description of the layout choices for breakup is one of the layout choices for a 48_64 partition with 4 intermediate switch boards.

Partition 1 contains switch_port_numbers: 0 - 63

Partition 2 contains switch_port_numbers: 64 - 111

Layouts for 16_48_48 Partition

The following are the layout choices for a 16_48_48 system partition of a 112 switch port system.

Layout 1

This is the description of the layout choices for a 16_48_48 system partition configuration of a 112 switch port system with 4 intermediate switch boards.

Partition 1 contains switch_port_numbers: 16 - 63

Partition 2 contains switch_port_numbers: 64 - 111

Partition 3 contains switch_port_numbers: 0 - 15

Layout 2

This is the description of the layout choices for a 16_48_48 system partition configuration of a 112 switch port system with 4 intermediate switch boards.

Partition 1 contains node slots: 0 - 15, 32 - 63

Partition 2 contains switch_port_numbers: 64 - 111

Partition 3 contains switch_port_numbers: 16 - 31

Layout 3

This is the description of the layout choices for a 16_48_48 system partition configuration of a 112 switch port system with 4 intermediate switch boards.

Partition 1 contains switch_port_numbers: 0 - 31, 48 - 63

Partition 2 contains switch_port_numbers: 64 - 111

Partition 3 contains switch_port_numbers: 32 - 47

Layout 4

This is the description of the layout choices for a 16_48_48 system partition configuration of a 112 switch port system with 4 intermediate switch boards.

Partition 1 contains switch_port_numbers: 0 - 47

Partition 2 contains switch_port_numbers: 64 - 111

Partition 3 contains switch_port_numbers: 48 - 63

Layouts for 16_96 Partition

The following are the layout choices for a 16_96 system partition of a 112 switch port system.

Layout 1

This is the description of the layout choices for a 16_96 system partition configuration of a 112 switch port system with 4 intermediate switch boards.

Partition 1 contains switch_port_numbers: 0 - 15

Partition 2 contains switch_port_numbers: 16 - 111

Layout 2

This is the description of the layout choices for a 16_96 system partition configuration of a 112 switch port system with 4 intermediate switch boards.

Partition 1 contains switch_port_numbers: 16 - 31

Partition 2 contains switch_port_numbers: 0 - 15, 32 - 111

Layout 3

This is the description of the layout choices for a 16_96 system partition configuration of a 112 switch port system with 4 intermediate switch boards.

Partition 1 contains switch_port_numbers: 32 - 47

Partition 2 contains switch_port_numbers: 0 - 31, 48 - 111

Layout 4

This is the description of the layout choices for a 16_96 system partition configuration of a 112 switch port system with 4 intermediate switch boards.

Partition 1 contains switch_port_numbers: 48 - 63

Partition 2 contains switch_port_numbers: 0 - 47, 64 - 111

Layout 5

This is the description of the layout choices for a 16_96 system partition configuration of a 112 switch port system with 4 intermediate switch boards.

Partition 1 contains switch_port_numbers: 64 - 79

Partition 2 contains switch_port_numbers: 0 - 63, 80 - 111

Layout 6

This is the description of the layout choices for a 16_96 system partition configuration of a 112 switch port system with 4 intermediate switch boards.

Partition 1 contains switch_port_numbers: 80 - 95

Partition 2 contains switch_port_numbers: 0 - 79, 96 - 111

Layout 7

This is the description of the layout choices for a 16_96 system partition configuration of a 112 switch port system with 4 intermediate switch boards.

Partition 1 contains switch_port_numbers: 96 - 111

Partition 2 contains switch_port_numbers: 0 - 95

Layouts for 112 Partition

This layout is the only layout choice for a 112 system partition of a 112 switch port system.

Layout 1

This is the description of the layout choices for a 112 system partition configuration of a 112 switch port system with 4 intermediate switch boards.

Partition 1 contains switch_port_numbers: 0 - 111

---

128 Switch Port System

Layouts for 16_48_64 Partition

The following are the layout choices for a 16_48_64 system partition of a 128 switch port system.

Layout 1

This is the description of the layout choices for a 16_48_64 system partition configuration of a 128 switch port system with 4 intermediate switch boards.

Partition 1 contains switch_port_numbers: 64 - 127

Partition 2 contains switch_port_numbers: 16 - 63

Partition 3 contains switch_port_numbers: 0 - 15

Layout 2

This is the description of the layout choices for a 16_48_64 system partition configuration of a 128 switch port system with 4 intermediate switch boards.

Partition 1 contains switch_port_numbers: 64 - 127

Partition 2 contains switch_port_numbers: 0 - 15, 32 - 63

Partition 3 contains switch_port_numbers: 16 - 31

Layout 3

This is the description of the layout choices for a 16_48_64 system partition configuration of a 128 switch port system with 4 intermediate switch boards.

Partition 1 contains switch_port_numbers: 64 - 127

Partition 2 contains switch_port_numbers: 0 - 31, 48 - 63

Partition 3 contains switch_port_numbers: 32 - 47

Layout 4

This is the description of the layout choices for a 16_48_64 system partition configuration of a 128 switch port system with 4 intermediate switch boards.

Partition 1 contains switch_port_numbers: 64 - 127

Partition 2 contains switch_port_numbers: 0 - 47

Partition 3 contains switch_port_numbers: 48 - 63

Layout 5

This is the description of the layout choices for a 16_48_64 system partition configuration of a 128 switch port system with 4 intermediate switch boards.

Partition 1 contains switch_port_numbers: 0 - 63

Partition 2 contains switch_port_numbers: 80 - 127

Partition 3 contains switch_port_numbers: 64 - 79

Layout 6

This is the description of the layout choices for a 16_48_64 system partition configuration of a 128 switch port system with 4 intermediate switch boards.

Partition 1 contains switch_port_numbers: 0 - 63

Partition 2 contains switch_port_numbers: 64 - 79, 96 - 127

Partition 3 contains switch_port_numbers: 80 - 95

Layout 7

This is the description of the layout choices for a 16_48_64 system partition configuration of a 128 switch port system with 4 intermediate switch boards.

Partition 1 contains switch_port_numbers: 0 - 63

Partition 2 contains switch_port_numbers: 64 - 95, 112 - 127

Partition 3 contains switch_port_numbers: 96 - 111

Layout 8

This is the description of the layout choices for a 16_48_64 system partition configuration of a 128 switch port system with 4 intermediate switch boards.

Partition 1 contains switch_port_numbers: 0 - 63

Partition 2 contains switch_port_numbers: 64 - 111

Partition 3 contains switch_port_numbers: 112 - 127

Layouts for 16_112 Partition

The following are the layout choices for a 16_112 system partition of a 128 switch port system.

Layout 1

This is the description of the layout choices for a 16_112 system partition configuration of a 128 switch port system with 4 intermediate switch boards.

Partition 1 contains switch_port_numbers: 16 - 127

Partition 2 contains switch_port_numbers: 0 - 15

Layout 2

This is the description of the layout choices for a 16_112 system partition configuration of a 128 switch port system with 4 intermediate switch boards.

Partition 1 contains switch_port_numbers: 0 - 15, 32 - 127

Partition 2 contains switch_port_numbers: 16 - 31

Layout 3

This is the description of the layout choices for a 16_112 system partition configuration of a 128 switch port system with 4 intermediate switch boards.

Partition 1 contains switch_port_numbers: 0 - 31, 48 - 127

Partition 2 contains switch_port_numbers: 32 - 47

Layout 4

This is the description of the layout choices for a 16_112 system partition configuration of a 128 switch port system with 4 intermediate switch boards.

Partition 1 contains switch_port_numbers: 0 - 47, 64 - 127

Partition 2 contains switch_port_numbers: 48 - 63

Layout 5

This is the description of the layout choices for a 16_112 system partition configuration of a 128 switch port system with 4 intermediate switch boards.

Partition 1 contains switch_port_numbers: 0 - 63, 80 - 127

Partition 2 contains switch_port_numbers: 64 - 79

Layout 6

This is the description of the layout choices for a 16_112 system partition configuration of a 128 switch port system with 4 intermediate switch boards.

Partition 1 contains switch_port_numbers: 0 - 79, 96 - 127

Partition 2 contains switch_port_numbers: 80 - 95

Layout 7

This is the description of the layout choices for a 16_112 system partition configuration of a 128 switch port system with 4 intermediate switch boards.

Partition 1 contains switch_port_numbers: 0 - 95, 112 - 127

Partition 2 contains switch_port_numbers: 96 - 111

Layout 8

This is the description of the layout choices for a 16_112 system partition configuration of a 128 switch port system with 4 intermediate switch boards.

Partition 1 contains switch_port_numbers: 0 - 111

Partition 2 contains switch_port_numbers: 112 - 127

Layouts for 64_64 Partition

This layout is the only layout choice for a 64_64 system partition of an 128 switch port system.

Layout 1

This is the description of the layout choices for a 64_64 system partition configuration of a 128 switch port system with 4 intermediate switch boards.

Partition 1 contains switch_port_numbers: 0 - 63

Partition 2 contains switch_port_numbers: 64 - 127

Layouts for 128 Partition

This layout is the only layout choice for a 128 system partition of a 128 switch port system.

Layout 1

This is the description of the layout choices for a 128 system partition configuration of a 128 switch port system with 4 intermediate switch boards.

Partition 1 contains switch_port_numbers: 0 - 127

Appendix C. SP System Planning Worksheets

This chapter contains the following SP system planning worksheets:

Table 32. List of SP Planning Worksheets

Number	Name	Page
1	SP Preliminary Application List	224
2	IBM Program Products	224
3	External Disk Storage Needs	225
4	SP Planning	225
5, 6	SP Node Layout Diagrams (several copies)	226
7	SP Hardware Configuration by Node	227
8a, 8b	SP Node Network Configuration	228
9	Switch Configuration	230
10	Supported Adapters	230
11	SP System Image Worksheet (SPIMG)	233
12	AIX 4.2.1 File sets	234
13	PSSP 2.3 File sets	239
14a	SP Control Workstation Image	240
14b	Select a Time Zone	241
15	SP Control Workstation Network	242
16	SP Site Environment	243
17	SP Authentication Worksheets	244

Make photocopies of these worksheets as required. Instructions for using the worksheets are contained in Chapter 2, “Defining the System that Fits Your Needs” on page 11, in Chapter 3, “Defining the Configuration that Fits Your Needs” on page 57, and in Chapter 6, “Planning for Security” on page 119.

© Copyright IBM Corp. 1997

Table 33. Preliminary List of Applications

Worksheet 1 SP Preliminary List of Applications		
Application	**Parallel √**	**Need Switch √**
	√ n ?	√ n ?
	√ n ?	√ n ?
	√ n ?	√ n ?
	√ n ?	√ n ?
	√ n ?	√ n ?
	√ n ?	√ n ?
	√ n ?	√ n ?
	√ n ?	√ n ?

√ means that you want this application.

n means that you do not want this application.

? means that you do not know if you want this application.

Table 34. IBM Program Products to Order

Worksheet 2 IBM Program Products			
Order	**Program Product**	**Program Number**	**Level**
	IBM C for AIX	5675-423	3.1
	IBM C++ for AIX	5765-421	3.1
	IBM Parallel System Support Programs for AIX (PSSP)	5765-529	2.2
	IBM LoadLeveler	5765-145	1.3
	IBM Client Input Output/Sockets (CLIO/S)	5648-129	2.2
	IBM Parallel Environment for AIX	5765-543	2.3
		5765-543	2.2
	IBM Parallel Optimization Subroutine Library	5765-392	1.3.0
	IBM Parallel Engineering and Scientific Subroutine Library	5765-422	1.1
		5765-422	1.2
	IBM Parallel I/O File System for AIX	5765-297	1.2
	IBM PVMe for AIX (PSSP 2.2 only)	5765-544	2.2
	IBM Recoverable Virtual Shared Disk	5765-646	2.1
		5765-444	1.2
	NetTape	5765-637	1.2
	Tape Library Connection	5765-643	1.2
	General Parallel File System	5765-B95	1.1
	Interactive Session Support for AIX	5765-B67	1.1

Note: Add other AIX program products that you expect to use such as the C Set ++ for AIX or other compilers.

Table 35. External Disk Storage Needs

Worksheet 3		
Check the external disk subsystems you require		
How Many	**External Disk Subsystem**	**Disk Space (MB)**
	7133 (4.5 to 72GB)	
	7134 (4.5 to 72GB)	
	7135 (4.5 to 135GB)	
	7137 (4 to 33GB)	

Table 36. Overall System Information

SP Planning - Worksheet 4

Customer Name _____ **Date** _____
Customer Number _____
Customer Contact _____ **Phone** _____
IBM Contact _____ **Phone** _____

SP Model	___206	___306	___406	___2A6	___3A6	___3B6
	___207	___307	___407	___2A7	___3A7	___3B7
	___208	___308	___408	___2A8	___3A8	___3B8
	___209	___309	___409	___2A9	___3A9	___3B9

Number of Frames	Number of Switches	Number of Thin Nodes	Number of Wide Nodes	Number of 604 High Nodes	Number of 604e High Nodes
___	___	___	___	___	___

External Disk Storage	7133	7134	7135	7137
	_____	_____	_____	_____

Ascend GRF IP Switched Router: _____
SP Switch Router Adapter: _____
Network Media Cards:

Type: _____	Type: _____	Type: _____
Quantity: _____	Quantity: _____	Quantity: _____

Fill in the remainder of this chart after you place your order
RS/6000 SP System Number _____
RS/6000 SP Purchase Order Number _____
Control Workstation System Number _____
Control Workstation Purchase Order Number _____
Peripheral Order Numbers _____

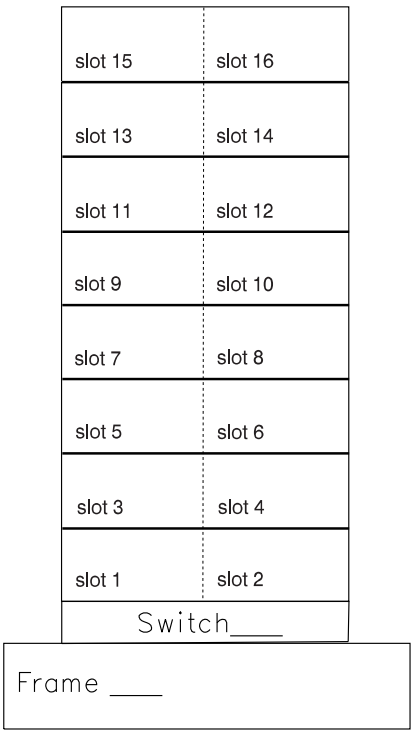

Figure 55. SP Node Layout Worksheet For One Frame.

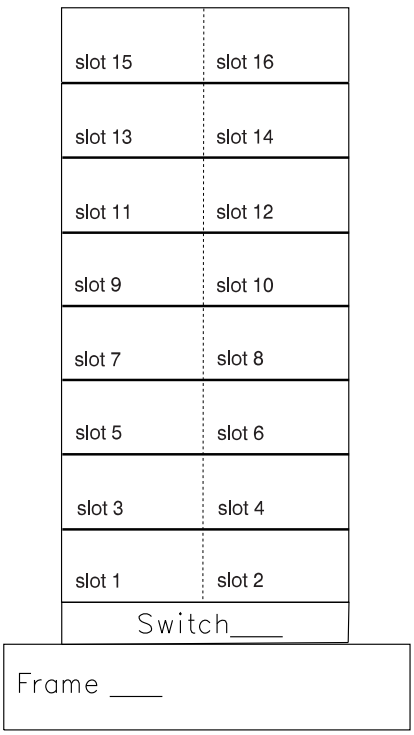

Figure 56. Extra SP Node Layout Worksheet For One Frame

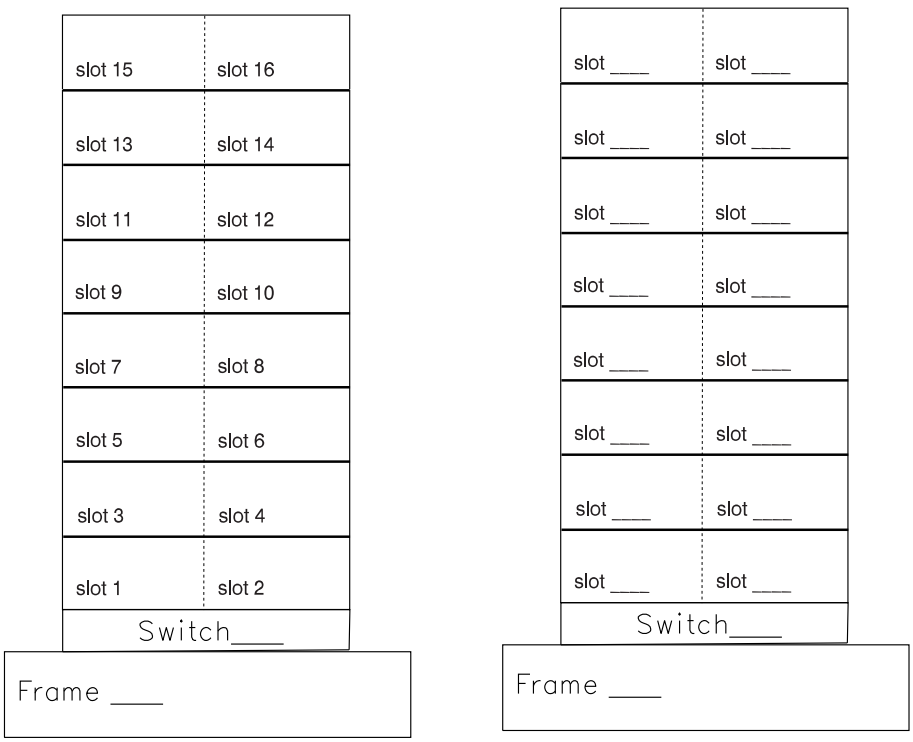

Figure 57. Node Layout Worksheet For Two Frames

Table 37. Hardware Configuration By Node

SP Hardware Configuration by Node - Worksheet 7						
Frame Number _____ Switch Number _____						
Slot Number	**Node Number**	**Node Type**	**Processor Memory**	**Internal Disk**	**L2 Cache**	**Adapters**
Slot 1						
Slot 2						
Slot 3						
Slot 4						
Slot 5						
Slot 6						
Slot 7						
Slot 8						
Slot 9						
Slot 10						
Slot 11						
Slot 12						
Slot 13						
Slot 14						
Slot 15						
Slot 16						

Table 38. SP Node Network Configuration

SP Node Network Configuration - Worksheet 8A

Company Name

_____

Date_____

Frame Number____

Token Ring Speed____

Slot	SP Ethernet *en0 adapters)* Netmask_____		Default Route
	Hostname (note 1)	IP Address	
1			
2			
3			
4			
5			
6			
7			
8			
9			
10			
11			
12			
13			
14			
15			
16			

Notes:

1. AIX is case sensitive. Use lower case for the hostname and addresses.
2. Wide nodes occupy two frame slots and use the *odd-numbered* slot number.

Table 39. SP Node Network Configuration

SP Node Network Configuration - Worksheet 8B

Company Name_____
Date_____
Frame Number____
Token Ring Speed___

Slot	Additional Adapter Netmask_____			Default Route
	Adapter Name	Hostname (note 1)	IP Address	
1				
2				
3				
4				
5				
6				
7				
8				
9				
10				
11				
12				
13				
14				
15				
16				

Notes:

1. AIX is case sensitive. Use lower case for the hostname and addresses.
2. Wide nodes occupy two frame slots and use the *odd-numbered* slot number.

Table 40. Switch Configuration Worksheet

Switch Configuration -Worksheet 9			
Frame Number ____ Switch Number ____ Netmask _____			
Slot Number	Switch Node Number	Hostname	IP Address
Slot 1			
Slot 2			
Slot 3			
Slot 4			
Slot 5			
Slot 6			
Slot 7			
Slot 8			
Slot 9			
Slot 10			
Slot 11			
Slot 12			
Slot 13			
Slot 14			
Slot 15			
Slot 16			

Table 41 (Page 1 of 3). Adapters Supported

Adapters Supported - Worksheet 10								
√	**Adapter**	**Feature code**	**Wide node** [1] **quantity per node**	**Thin node** [2] **quantity per node**	**High node** [3] **quantity per node**	**Number of slots Required**	**AIX 4.1**	**AIX 4.2**
	Internal Ethernet	Standard	N/A	1	N/A	0	yes	yes
	FCS Dwtr	1902 [7/8/11]	0 - 2	0 -1	N/A	0	yes	yes
	FCS 1GB	1904 [8/11]	N/A	N/A	N/A	1	4.1.4	no
	FCS 266MB	1906[11]	0 - 2	0 - 2	N/A	1	AIX 3.2.5 only	
	NetW TA 256	2402	0 - 7	0 - 4	0 - 4	1	no	yes
	NetW TA 2048	2403	0 - 7	0 - 4	0 - 4	1	no	yes
	SCSI-2 Ext I/O	2410	0 - 7	0 - 4	N/A	1	4.1.4	yes
	SCSI Turbo	2412	0 - 7	0 - 4	0 -14	1	4.1.3	yes
	SCSI F/W DIF	2415	0 - 7	0 - 4	1 -14	1	4.1.1	yes
	SCSI F/W DIF	2416	0 - 7	0 - 4	0 - 14	1	4.1.1	yes

Table 41 (Page 2 of 3). Adapters Supported

Adapters Supported - Worksheet 10								
√	**Adapter**	**Feature code**	**Wide node [1] quantity per node**	**Thin node [2] quantity per node**	**High node [3] quantity per node**	**Number of slots Required**	**AIX 4.1**	**AIX 4.2**
	SCSI EXT I/O	2420	0 - 7	0 - 4	N/A	1	4.1.4	yes
	4 port Multi Comm	2700	0 - 7	0 - 3	0 - 8	1	4.1.1	yes
	FDDI D/R	2723 [4]	0 - 3	0 - 2	0 - 8	1	4.1.1	yes
	FDDI S/R	2724	0 - 6	0 - 2	0 - 8	1	4.1.1	yes
	HIPPI[5/6]	2735	0 - 1	N/A	0 - 2[6]	5[5]	4.1.4	yes
	ESCON Chan Em.	2754	0 - 2	0 - 1	0 - 4	2	4.1.4	yes
	BMCA	2755	0 - 2	0 - 2	0 - 2	1	4.1.4	yes
	ESCON CNTRL	2756	0 - 2	0 - 1	0 - 4	2	4.1.4	yes
	8-port async 232	2930[9]	0 - 7	0 - 4	0 - 14	1	4.1.1	yes
	8-port async 422	2940[9]	0 - 7	0 - 4	0 - 14	1	4.1.1	yes
	X.25 inter co-p	2960	0 - 7	0 - 4	0 - 8	1	4.1.3	yes
	Token Ring	2970	0 - 7	0 - 4	0 - 12	1	4.1.1	yes
	Token Ring	2972	0 - 7	0 - 3	0 - 12	1	4.1.1	yes
	Ethernet	2980		0 - 3	1 - 8	1	4.1.1	yes
	ATM 100	2984	0 - 2	0 - 2	0 - 2	1	4.1.4	yes
	ATM 155	2989 [8]	0 - 2	0 - 2	0 - 2	1	4.1.4	yes
	Ether TP	2992	0 - 7[13]	0 - 3	N/A	1	4.1.4	yes
	Ether BNC	2993	0 - 7[13]	0 - 3	N/A	1	4.1.4	yes
	Ether BNC	2994	x	x	—	1	4.1	—
	HPS-2 (TB2)	4018	0 - 1	0 - 1	0 - 1	1	4.1.1	yes
	SPSw (TB3)	4020	0 - 1	0 - 1	0 - 1	1	4.1.1	yes
	Enet 10baseT	4224	0 -8	0 - 4	0 - 15	0	4.1.1	yes
	HI-P Subsys	6212	0 - 4	0 - 2	0 - 8[10]	1	4.1.1	yes
	SSA	6214	0 - 4	0 - 2	0 - 8[10]	1	4.1.4	yes
	SSA	6216 [8]	0 - 4	0 - 2	0 - 8[10]	1	4.1.4	yes
	SSA 4RD	6217	0 - 4	0 - 2	0 - 8	1	4.1.5	yes
	Digital Truck	6305	0 - 6	0 - 3	0 - 2	1	4.1.1	yes
	Prtmstr 1MB	7006[12]	0 - 7	0 - 4	0 - 8	1	4.1.1	yes

Table 41 (Page 3 of 3). Adapters Supported

Adapters Supported - Worksheet 10								
√	**Adapter**	**Feature code**	**Wide node [1] quantity per node**	**Thin node [2] quantity per node**	**High node [3] quantity per node**	**Number of slots Required**	**AIX 4.1**	**AIX 4.2**
	128 prt Cntrl	8128	0 - 7	0 - 7	0 - 7	1	4.1.1	yes

Note:

[1]: There are a total of 7 MCA slots available per wide node.
[2]: There are a total of 4 MCS slots available per thin node.
[3]:There are a total of 16 MCA slots per high node.
[4]: FDDI D/R adapters (F/C 2723) have a mandatory prerequisite of FDDI S/R adapters (F/C 2724)
[5]: The HIPPI feature uses 3 physical MCA slots and requires a total of 5 MCA slots to satisfy power and thermal requirements.
[6]: Hippi cannot be populated across the 2 micro channel buss on high nodes.
[7]: FCS Daughter card F/C 1902 does not require a micro channel slot.
[8]: These adapters are not supported on any 62MHz node, 201, 301, 2001, 1001.
[9]: This adapter has a co-requisite of 2995 feature cable.
[10]:The SSA Adapters in a high node are limited to a total count of 8 in any combination
[11]:1902, 1904, 1906 FCS adapters are not supported in the P2SC nodes which are the 135MHz wide nodes (F/C 2007) , and the 120MHz thin nodes (F/C 2008), nor are they supported on the SMP high nodes (F/C 2006).
[12]:7006 portmaster card requires the selection of 7042, 7044, 7046, or 7048.
[13]:The maximum of 2992 and 2993 in any combination is 8.

Note: If you order the SP Switch, you must order F/C 4020 for every node.

Note: You cannot have a combination of High Performance Switch and SP Switch adapters.

Table 42. Specifying the System Images (SPIMG)
Specifying System Images - Worksheet 11
System Image Name
AIX Level
Partition Number
Install on Node Numbers
Specify *internal* disks where you wish to install rootvg
Check here if you want only the SPIMG minimal image ____
IBM Licensed Products
AIX
PSSP
Additional AIX Software
Other Applications

Table 43 (Page 1 of 5). AIX 4.2.1 minimal image file sets		
AIX 4.2.1 File sets - Worksheet 12		
See the "PSSP 2.3 Memo to Users" for the latest file set updates.		
bos.acct	4.2.1.0	Accounting Services
bos.adt.debug	4.2.1.0	Base Application Development Debuggers
bos.adt.lib	4.2.1.0	Base Application Development Libraries
bos.diag.com	4.2.1.0	Common Hardware Diagnostics
bos.diag.rte	4.2.1.0	Hardware Diagnostics
bos.diag.util	4.2.1.0	Hardware Diagnostics Utilities
bos.iconv.com	4.2.1.0	Common Language to Language Converters
bos.ifor_ls.client	4.2.1.0	iFOR/LS License System Client Utilities
bos.info.en_US.smit_help	4.2.0.0	Help for SMIT - U.S. English
bos.loc.iso.en_US	4.2.1.0	Base System Locale ISO Code Set - U.S. English
bos.loc.pc_compat.En_US	4.2.1.0	Base System Locale PC Code Set - U.S. English
bos.loc.pc_compat.com	4.2.0.0	Common Locale Support - PC Code Set
bos.mp	4.2.1.0	Base Operating System Multiprocessor Runtime
bos.msg.en_US.diag.rte	4.2.0.0	Hardware Diagnostics Messages - U.S. English
bos.msg.en_US.net.tcp.client	4.2.0.2	TCP/IP Messages - U.S. English
bos.msg.en_US.rte	4.2.0.2	Base Operating System Runtime Messages - U.S. English
bos.msg.en_US.txt.tfs	4.2.0.0	Text Formatting Services Messages - U.S. English
bos.net.nfs.client	4.2.1.0	Network File System Client
bos.net.nis.client	4.2.1.0	Network Information Services Client
bos.net.tcp.client	4.2.1.1	TCP/IP Client Support
bos.net.tcp.smit	4.2.1.0	TCP/IP SMIT Support
bos.perf.diag_tool	4.2.1.0	Performance Diagnostic Tool
bos.perf.pmr	4.2.1.0	Performance PMR Data Collection Tool
bos.rte	4.2.1.0	Base Operating System Runtime
bos.rte.Dt	4.2.0.0	Desktop Integrator
bos.rte.ILS	4.2.1.0	International Language Support
bos.rte.SRC	4.2.1.0	System Resource Controller
bos.rte.X11	4.2.0.0	AIXwindows Device Support
bos.rte.aio	4.2.1.0	Asynchronous I/O Extension
bos.rte.archive	4.2.1.0	Archive Commands
bos.rte.bind_cmds	4.2.1.0	Binder and Loader Commands
bos.rte.boot	4.2.1.0	Boot Commands
bos.rte.bosinst	4.2.1.0	Base OS Install Commands
bos.rte.commands	4.2.1.0	Commands
bos.rte.compare	4.2.1.0	File Compare Commands
bos.rte.console	4.2.1.0	Console
bos.rte.control	4.2.1.0	System Control Commands

Table 43 (Page 2 of 5). AIX 4.2.1 minimal image file sets		
AIX 4.2.1 File sets - Worksheet 12		
bos.rte.cron	4.2.1.0	Batch Operations
bos.rte.date	4.2.1.0	Date Control Commands
bos.rte.devices	4.2.0.0	Base Device Drivers
bos.rte.devices_msg	4.2.1.0	Device Driver Messages
bos.rte.diag	4.2.1.0	Diagnostics
bos.rte.edit	4.2.1.0	Editors
bos.rte.filesystem	4.2.1.0	Filesystem Administration
bos.rte.iconv	4.2.1.0	Language Converters
bos.rte.ifor_ls	4.2.1.0	iFOR/LS Libraries
bos.rte.im	4.2.1.0	Input Methods
bos.rte.install	4.2.1.0	LPP Install Commands
bos.rte.jfscomp	4.2.0.0	JFS Compression
bos.rte.libc	4.2.1.0	libc Library
bos.rte.libcfg	4.2.1.0	libcfg Library
bos.rte.libcur	4.2.1.0	libcurses Library
bos.rte.libdbm	4.2.1.0	libdbm Library
bos.rte.libnetsvc	4.2.1.0	Network Services Libraries
bos.rte.libpthreads	4.2.1.0	libpthreads Library
bos.rte.libqb	4.2.1.0	libqb Library
bos.rte.libs	4.2.1.0	libs Library
bos.rte.loc	4.2.1.0	Base Locale Support
bos.rte.lvm	4.2.1.0	Logical Volume Manager
bos.rte.man	4.2.1.0	Man Commands
bos.rte.methods	4.2.1.0	Device Config Methods
bos.rte.misc_cmds	4.2.1.0	Miscellaneous Commands
bos.rte.net	4.2.0.0	Network
bos.rte.odm	4.2.1.0	Object Data Manager
bos.rte.printers	4.2.1.0	Front End Printer Support
bos.rte.security	4.2.1.0	Base Security Function
bos.rte.serv_aid	4.2.1.0	Error Log Service Aids
bos.rte.shell	4.2.1.0	Shells (bsh, ksh, csh)
bos.rte.streams	4.2.1.0	Streams Libraries
bos.rte.tty	4.2.1.0	Base TTY Support and Commands
bos.sysmgt.loginlic	4.2.1.0	License Management
bos.sysmgt.serv_aid	4.2.1.0	Software Error Logging and Dump Service Aids
bos.sysmgt.smit	4.2.1.0	System Management Interface Tool (SMIT)
bos.sysmgt.sysbr	4.2.1.0	System Backup and BOS Install Utilities
bos.sysmgt.trace	4.2.1.0	Software Trace Service Aids

Table 43 (Page 3 of 5). AIX 4.2.1 minimal image file sets		
AIX 4.2.1 File sets - Worksheet 12		
bos.terminfo.com.data	4.2.0.0	Common Terminal Definitions
bos.terminfo.dec.data	4.2.1.0	Digital Equipment Corp. Terminal Definitions
bos.terminfo.ibm.data	4.2.0.0	IBM Terminal Definitions
bos.terminfo.pc.data	4.2.0.0	Personal Computer Terminal Definitions
bos.terminfo.rte	4.2.1.0	Run-time Environment for AIX Terminals
bos.txt.spell	4.2.0.0	Writer's Tools Commands
bos.txt.spell.data	4.2.0.0	Writer's Tools Data
bos.txt.tfs	4.2.1.0	Text Formatting Services Commands
bos.txt.tfs.data	4.2.0.0	Text Formatting Services Data
bos.up	4.2.1.0	Base Operating System Uniprocessor Runtime
devices.base.diag	4.2.1.0	Base System Diagnostics
devices.base.rte	4.2.1.0	RISC System 6000 Base Device Software
devices.common.IBM.async.diag	4.2.1.0	Common Serial Adapter Diagnostics
devices.common.IBM.cx.rte	4.2.1.0	CX Common Adapter Software
devices.common.IBM.disk.rte	4.2.1.0	Common IBM Disk Software
devices.common.IBM.ethernet.rte	4.2.1.0	Common Ethernet Software
devices.common.IBM.fda.diag	4.2.0.0	Common Diskette Adapter and Device Diagnostics
devices.common.IBM.fda.rte	4.2.0.0	Common Diskette Device Software
devices.common.IBM.ktm_std.diag	4.2.1.0	Common Keyboard, Mouse, and Tablet Device Diagnostics
devices.common.IBM.ppa.diag	4.2.1.0	Common Parallel Printer Adapter Diagnostics
devices.common.IBM.ppa.rte	4.2.0.0	Common Parallel Printer Adapter Software
devices.common.IBM.scsi.rte	4.2.1.0	Common SCSI I/O Controller Software
devices.common.base.diag	4.2.1.0	Common Base System Diagnostics
devices.graphics.com	4.2.1.0	Graphics Adapter Common Software
devices.mca.8d77.diag	4.2.1.0	8-bit SCSI I/O Controller Diagnostics
devices.mca.8d77.rte	4.2.1.0	8-bit SCSI I/O Controller Software
devices.mca.8d77.ucode	4.2.0.0	8-bit SCSI I/O Controller Microcode
devices.mca.8ee4.X11	4.2.0.0	AIXwindows Color Graphics Display Adapter Software
devices.mca.8ee4.diag	4.2.0.0	Color Graphics Display Adapter Diagnostics
devices.mca.8ee4.rte	4.2.1.0	Color Graphics Display Adapter Software
devices.mca.8ef2.com	4.2.1.0	Common Integrated Ethernet Software
devices.mca.8ef2.diag	4.2.1.0	Integrated Ethernet Adapter (8ef2) Diagnostics
devices.mca.8ef2.diag.com	4.2.1.0	Common Integrated Ethernet Diagnostics
devices.mca.8ef5.diag	4.2.1.0	Ethernet High-Performance LAN Adapter (8ef5) Diagnostics
devices.mca.8ef5.rte	4.2.1.0	Ethernet High-Performance LAN Adapter (8ef5) Software
devices.mca.8efc.com	4.2.1.0	Common 16-bit SCSI I/O Controller Software
devices.mca.8efc.diag	4.2.1.0	16-bit SCSI I/O Controller Diagnostics

Table 43 (Page 4 of 5). AIX 4.2.1 minimal image file sets		
AIX 4.2.1 File sets - Worksheet 12		
devices.mca.8efc.rte	4.2.1.0	16-bit SCSI I/O Controller Software
devices.mca.8fba.com	4.2.1.0	Common NCR53C7XX SCSI Software
devices.mca.8fba.diag	4.2.0.0	Standard NCR53C720 SCSI Diagnostics
devices.mca.8fba.rte	4.2.1.0	Standard NCR53C720 SCSI Software
devices.mca.8fc8.com	4.2.1.0	Common Token Ring Software
devices.mca.8fc8.diag	4.2.1.0	Token Ring High-Performance Adapter (8fc8) Diagnostics
devices.mca.8fc8.rte	4.2.1.0	Token Ring High-Performance Adapter (8fc8) Software
devices.mca.8fc8.ucode	4.2.0.0	Token Ring High-Performance Adapter (8fc8) Microcode
devices.mca.df5f.com	4.2.0.0	Standard I/O Adapter Common Software
devices.mca.df5f.rte	4.2.0.0	Standard I/O (df5f) Adapter Software
devices.mca.df9f.rte	4.2.0.0	Direct Attached Disk Software
devices.mca.edd0.com	4.2.1.0	Common Async Adapter Support
devices.mca.edd0.diag	4.2.0.0	8-Port Asynchronous Adapter EIA-232 Diagnostics
devices.mca.edd0.rte	4.2.0.0	8-Port Asynchronous Adapter EIA-232 Software
devices.mca.ffe1.diag	4.2.0.0	128-Port Asynchronous Adapter Diagnostics
devices.mca.ffe1.rte	4.2.1.0	128-Port Asynchronous Adapter Software
devices.mca.ffe1.ucode	4.2.0.0	128-Port Asynchronous Adapter Microcode
devices.msg.en_US.base.com	4.2.0.2	Base System Device Software Messages - U.S. English
devices.msg.en_US.diag.rte	4.2.0.0	Device Diagnostics Messages - U.S. English
devices.msg.en_US.rspc.base.com	4.2.0.0	RISC PC Software Messages - U.S. English
devices.msg.en_US.sys.mca.rte	4.2.0.0	Micro Channel Bus Software Messages - U.S. English
devices.rs6ksmp.base.rte	4.2.0.0	Multiprocessor Base System Device Software
devices.scsi.disk.diag.com	4.2.1.0	Common Disk Diagnostic Service Aid
devices.scsi.disk.diag.rte	4.2.1.0	SCSI CD_ROM, Disk Device Diagnostics
devices.scsi.disk.rspc	4.2.0.0	RISC PC SCSI CD-ROM, Disk, Read/Write Optical Device Software
devices.scsi.disk.rte	4.2.1.0	SCSI CD-ROM, Disk, Read/Write Optical Device Software
devices.scsi.tape.diag	4.2.1.0	SCSI Tape Device Diagnostics
devices.scsi.tape.rspc	4.2.1.0	RISC PC SCSI Tape Device Software
devices.scsi.tape.rte	4.2.1.0	SCSI Tape Device Software
devices.sio.fda.diag	4.2.0.0	Diskette Adapter and Device Diagnostics
devices.sio.fda.rte	4.2.1.0	Diskette Adapter Software
devices.sio.ktma.com	4.2.0.0	Common Keyboard Tablet & Mouse Device and Adapter Software
devices.sio.ktma.diag	4.2.1.0	Keyboard Tablet & Mouse Device and Adapter Diagnostics
devices.sio.ktma.rte	4.2.1.0	Keyboard Tablet & Mouse Device and Adapter Software
devices.sio.ppa.diag	4.2.0.0	Parallel Printer Adapter Diagnostics

Table 43 (Page 5 of 5). AIX 4.2.1 minimal image file sets		
AIX 4.2.1 File sets - Worksheet 12		
devices.sio.ppa.rte	4.2.1.0	Parallel Printer Adapter Software
devices.sio.sa.diag	4.2.0.0	Built-in Serial Adapter Diagnostics
devices.sio.sa.rte	4.2.0.0	Built-in Serial Adapter Software
devices.sys.mca.rte	4.2.1.0	Micro Channel Bus Software
devices.sys.slc.diag	4.2.0.0	Serial Optical Link Diagnostics
devices.sys.slc.rte	4.2.1.0	Serial Optical Link Software
devices.tty.rte	4.2.1.0	TTY Device Driver Support Software
printers.msg.en_US.rte	4.2.0.0	Printer Backend Messages - U.S. English
printers.rte	4.2.1.1	Printer Backend
xlC.msg.en_US.rte	3.1.3.0	C Set ++ for AIX Application Runtime Messages en_US
xlC.rte	3.1.3.0	C Set ++ for AIX Application Runtime

Table 44. File Set List for PSSP 2.3

PSSP 2.3 File Sets Worksheet – 13		
System Image Name _____		
√	**File Set**	**Description**
	ssp.st	Application programming interface for loading, unloading, and querying the job switch resource table.
	ssp.ha	Availability subsystems which include heartbeat, Group Services, and Event Management.
	ssp.perlpkg	Perl4 and Perl5
	ssp.pman	Problem management
	ssp.clients	SP Authenticated Client Commands
	ssp.basic	SP System Support Package
	ssp.css	SP Communication Subsystem Package (only if switch installed)
	ssp.sysman	Optional System Management Programs
	ssp.sysctl	SP Sysctl Package
	ssp.authent	SP Authentication Server
	ssp.public	Public Code Compressed Tarfiles
	ssp.docs	PostScript, man pages, and HTML files for PSSP documentation
	ssp.gui	SP System Monitor Graphical User Interface and SP Perspectives
	ssp.jm	SP Resource Manager Package
	ssp.top	SP System Partition Support
	ssp.csd.vsd	IBM Virtual Shared Disk Package
	ssp.csd.cmi	SP Centralized Management Interface Package for IBM Virtual Shared Disk
	ssp.csd.hsd	IBM Virtual Shared Disk Data Striping package
	ssp.csd.gui	Perspectives for IBM Virtual Shared Disk
	ssp.csd.sysctl	IBM Virtual Shared Disk Usability Improvement
	ssp.hacws	High Availability Control Workstation Support
	ssp.ptpegui	PTPE graphical user interface
	ssp.topsvcs	Topology services
	spimg	Contains a single file with the mksysb image of a minimal AIX 4.2 system.
	ssp.top.gui	Graphical user interface for System Partitioning Aid
	ssp.spmgr	Extension Node SNMP Manager Support

Note:

For information on whether these file sets are installed on the control workstation and the node, refer to chapter 2 of the *Installation and Migration Guide*

Table 45. Control Workstation Image Worksheet	
Worksheet 14a	
SP Control Workstation Image	
Control Workstation Name	
Model	
Install rootvg on disk	
Disk Space	
Memory Size	
Hardware Options and Adapters	
Type	**Quantity**
ATM	
Ethernet	
FDDI	
Token Ring: Speed _____MB	
Multiport Serial Adapters	
8mm Tape Drive	
CD-ROM	
IBM Licensed Products	
AIX	
PSSP	
C for AIX	
LoadLeveler	
X-Windows	
þ	
þ	
þ	
Other Applications	
þ	
þ	
þ	
þ	

Table 46. Time Zones

Worksheet 14b				
Select a Time Zone				
Select using a √	**Time Zone**	**Select using a √**	**Time Zone**	**Description**
	(CUT0)		(CUT0GDT)	Coordinated Universal Time (CUT)
	(GMT0)		(GMT0BST)	United Kingdom (CUT)
	(AZOREST1)		(AZOREST1AZOREDT)	Azores; Cape Verde (CUT -1)
	(FALKST2)		(FALKST2FALKDT)	Falkland Islands (CUT -2)
	(GRNLNDST3)		(GRNLNDST3GRNLNDDT)	Greenland; East Brazil (CUT -3)
	(AST4)		(AST4ADT)	Central Brazil (CUT -4)
	(EST5)		(EST5EDT)	Eastern U.S.; Colombia (CUT -5)
	(CST6)		(CST6CDT)	Central U.S.; Honduras (CUT -6)
	(MST7)		(MST7MDT)	Mountain U.S. (CUT -7)
	(PST8)		(PST8PDT)	Pacific U.S.; Yukon (CUT -8)
	(AST9)		(AST9ADT)	Alaska (CUT -9)
	(HST10)		(HST10HDT)	Hawaii; Aleutian (CUT-10)
	(BST11)		(BST11BDT)	Bering Straits (CUT-11)
	(NZST-12)		(NZST-12NZDT)	New Zealand (CUT+12)
	(MET-11M)		(MET-11METDT)	Solomon Islands (CUT+11)
	(EET-10E)		(EET-10EETDT)	Eastern Australia (CUT+10)
	(JST-9)		(JST-9JDT)	Japan (CUT +9)
	(KORST-9)		(KORST-9KORDT)	Korea (CUT +9)
	(WAUST-8)		(WAUST-8WAUDT)	Western Australia (CUT +8)
	(TAIST-8)		(TAIST-8TAIDT)	Taiwan (CUT +8)
	(THAIST-7)		(THAIST-7THAIDT)	Thailand (CUT +7)
	(TASHST-6)		(TASHST-6TASHDT)	Tashkent; Central Asia (CUT +6)
	(PAKST-5)		(PAKST-5PAKDT)	Pakistan (CUT +5)
	(WST-4)		(WST-4WDT)	Gorki; Central Asia; Oman (CUT +4)
	(MEST-3)		(MEST-3MEDT)	Turkey (CUT +3)
	(SAUST-3)		(SAUST-3SAUDT)	Saudi Arabia (CUT +3)
	(WET-2)		(WET-2WET)	Finland (CUT +2)
	(USAST-2)		(USAST-2USADT)	South Africa (CUT +2)
	(NFT-1)		(NFT-1DFT)	Norway; France (CUT +1)

Table 47. Control Workstation Network Worksheet

SP Control Workstation Network - Worksheet 15

Name_____
Date_____
System Name_____

Control Workstation Name_____

Frame Hardware Control Connections (RS-232)				**Control Workstation Network Connections (note 2)**			
Frame Number	**Serial Port for RS-233 Control Line (note 1)**	**tty Device**		**Adapter**	**Hostname**	**IP Address**	**Netmask**

Notes:

1. Use the SMIT **tty** menu or the **mkdev** command to configure these ports.
2. Use the SMIT **mkinet** menu or the **mkdev** command to configure your SP Ethernet connection.

Table 48. Site Environment Worksheet

SP Site Environment - Worksheet 16			
Name _____		**Date** _____	
System Name _____		**Control Workstation Name** _____	
SMIT Dialog Field Name [a]	**Site Attribute** [b]	**Default Value**	**Your Choice**
Default Network Install Image	install_image	bos.obj.ssp.41	
Remove Install Image After Installs	remove_image	false	
NTP Installation	ntp_config	consensus	
NTP Server Hostname	ntp_server		
NTP Version	ntp_version	3	
Amd Configuration	amd_config	true	
Print Management Configuration	print_config	false	
Print System Secure Mode Login Name	print_id		
User Administration Interface	usermgmt_config	true	
Password File Server Hostname	passwd_file_loc	control workstation hostname	
Password File Location	passwd_file	/etc/passwd	
Home Directory Server Hostname	homedir_server	control workstation hostname	
Home Directory Path	homedir_path	/home/<control workstation>	
File Collection Management	filecoll_config	true	
Home Collection Daemon uid	supman_uid	102	
Home Collection Port	supfilesrv_port	8431	
SP Accounting Enabled	spacct_enable	false	
SP Accounting Active Node Threshold	spacct_node	80	
SP Exclusive Use Accounting Enabled	spacct_exclusive_enable	false	
Accounting Master	acct_master	0	
a. This is the name that appears on the SMIT dialog.		**b.** This is the attribute name to use on the **spsitenv** command.	

Table 49. PSSP Or Other Kerberos Authentication Servers				
Authentication - Worksheet 17				
	Hostname (long)	**Default realm**	**Control workstation**	**SP Authentication?**
Primary Server				
Secondary Servers				
Client Systems				

hostname Fully qualified hostname. For example, `kgn.east.abc.com`

default realm Domain portion of hostname in upper case. For example, `EAST.ABC.COM`

control workstation?

`y` This workstation is the SP control workstation for the system being installed.

`n` This workstation is *not* the SP control workstation for the system being installed.

Any of the secondary servers or client systems could be control workstations for other SP systems, but enter `y` only for this system's control workstation.

SP2 Authentication

`y` This workstation will run an SP authentication server.

`n` This workstation has a different MIT Kerberos 4 server installed.

This option is not applicable to client systems. You must install **ssp.authent** on all workstations for which you enter **y**.

Table 50. Local Realm Information, PSSP Authentication Server		
Local realm name		**Master password**
Administrative principal	.admin	Password
other principals	name	password
	name	password
	name	password
	name	password
	name	password
	name	password
	name	password
	name	password

Table 51. AFS Authentication Servers	
administrative principal	
Password	
Directory containing CellServDB, ThisCell files	
Directory containing kas command	

local realm The name of your local realm.

If blank, the local realm is the default realm you entered for the primary server.

administrative principal The name you will use as the primary administrator of the authentication database.

password The master password of the primary authentication server using SP authentication. Once you have written this password on the chart, be sure to keep the chart in a secure environment.

Glossary

Terms and Abbreviations

This glossary includes terms and definitions from:

- The *IBM Dictionary of Computing*, New York: McGraw-Hill, 1994.
- The *American National Standard Dictionary for Information Systems*, ANSI X3.172-1990, copyright 1990 by the American National Standards Institute (ANSI). Copies can be purchased from the American National Standards Institute, 1430 Broadway, New York, New York 10018. Definitions are identified by the symbol (A) after the definition.
- The *ANSI/EIA Standard - 440A: Fiber Optic Terminology*, copyright 1989 by the Electronics Industries Association (EIA). Copies can be purchased from the Electronic Industries Association, 2001 Pennsylvania Avenue N.W., Washington, D.C. 20006. Definitions are identified by the symbol (E) after the definition.
- The *Information Technology Vocabulary* developed by Subcommittee 1, Joint Technical Committee 1, of the International Organization for Standardization and the International Electrotechnical Commission (ISO/IEC JTC1/SC1). Definitions of published parts of this vocabulary are identified by the symbol (I) after the definition; definitions taken from draft international standards, committee drafts, and working papers being developed by ISO/IEC JTC1/SC1 are identified by the symbol (T) after the definition, indicating that final agreement has not yet been reached among the participating National Bodies of SC1.

The following cross-references are used in this glossary:

> **Contrast with.** This refers to a term that has an opposed or substantively different meaning.
> **See.** This refers the reader to multiple-word terms in which this term appears.
> **See also.** This refers the reader to terms that have a related, but not synonymous, meaning.
> **Synonym for.** This indicates that the term has the same meaning as a preferred term, which is defined in the glossary.

This section contains some of the terms that are commonly used in the SP publications.

IBM is grateful to the American National Standards Institute (ANSI) for permission to reprint its definitions from the American National Standard *Vocabulary for Information Processing* (Copyright 1970 by American National Standards Institute, Incorporated), which was prepared by Subcommittee X3K5 on Terminology and Glossary of the American National Standards Committee X3. ANSI definitions are preceded by an asterisk (*).

Other definitions in this glossary are taken from *IBM Vocabulary for Data Processing, Telecommunications, and Office Systems* (SC20-1699) and *IBM DATABASE 2 Application Programming Guide for TSO Users* (SC26-4081).

A

address. A character or group of characters that identifies a register, a device, a particular part of storage, or some other data source or destination.

AFS. A distributed file system that provides authentication services as part of its file system creation.

AIX. Abbreviation for Advanced Interactive Executive, IBM's licensed version of the UNIX operating system. AIX is particularly suited to support technical computing applications, including high function graphics and floating point computations.

Amd. Berkeley Software Distribution automount daemon.

API. Application Programming Interface. A set of programming functions and routines that provide access between the Application layer of the OSI seven-layer model and applications that want to use the network. It is a software interface.

application. The use to which a data processing system is put; for example, a payroll application, an airline reservation application.

application data. The data that is produced or used by an application program.

ARP. Address Resolution Protocol.

ATM. Asynchronous Transfer Mode. (See *TURBOWAYS 100 ATM Adapter*.)

authentication. The process of validating the identity of a user or server.

authorization. The process of obtaining permission to perform specific actions.

© Copyright IBM Corp. 1997

B

batch processing. * (1) The processing of data or the accomplishment of jobs accumulated in advance in such a manner that each accumulation thus formed is processed or accomplished in the same run. * (2) The processing of data accumulating over a period of time. * (3) Loosely, the execution of computer programs serially. (4) Computer programs executed in the background.

BMCA. Block Multiplexer Channel Adapter. The block multiplexer channel connection allows the RS/6000 to communicate directly with a host System/370 or System/390; the host operating system views the system unit as a control unit.

C

call home function. The ability of a system to call the IBM support center and open a PMR to have a repair scheduled.

charge feature. An optional feature for either software or hardware for which there is a charge.

CLI. Command Line Interface.

client. * (1) A function that requests services from a server and makes them available to the user. * (2) A term used in an environment to identify a machine that uses the resources of the network.

Client Input/Output Sockets (CLIO/S). An IBM software package that enables high-speed data and tape access between SP systems, AIX systems, and ES/9000 mainframes.

CLIO/S. Client Input/Output Sockets.

CMI. Centralized Management Interface provides a series of SMIT menus and dialogues used for defining and querying the SP system configuration.

connectionless. A communication process that takes place without first establishing a connection.

connectionless network. A network in which the sending logical node must have the address of the receiving logical node before information interchange can begin. The packet is routed through nodes in the network based on the destination address in the packet. The originating source does not receive an acknowledgment that the packet was received at the destination.

control workstation. A single point of control allowing the administrator or operator to monitor and manage the SP system using the IBM AIX Parallel System Support Programs.

D

daemon. A process, not associated with a particular user, that performs system-wide functions such as administration and control of networks, execution of time-dependent activities, line printer spooling and so forth.

DASD. Direct Access Storage Device. Storage for input/output data.

DCE. Distributed Computing Environment.

DFS. distributed file system. A subset of the IBM Distributed Computing Environment.

DNS. Domain Name Service. A hierarchical name service which maps high level machine names to IP addresses.

E

Error Notification Object. An object in the SDR that is matched with an error log entry. When an error log entry occurs that matches the Notification Object, a user-specified action is taken.

ESCON. Enterprise Systems Connection. The ESCON channel connection allows the RS/6000 to communicate directly with a host System/390; the host operating system views the system unit as a control unit.

Ethernet. (1) Ethernet is the standard hardware for TCP/IP local area networks in the UNIX marketplace. It is a 10-megabit per second baseband type LAN that allows multiple stations to access the transmission medium at will without prior coordination, avoids contention by using carrier sense and deference, and resolves contention by collision detection (CSMA/CD). (2) A passive coaxial cable whose interconnections contain devices or components, or both, that are all active. It uses CSMA/CD technology to provide a best-effort delivery system.

Ethernet network. A baseband LAN with a bus topology in which messages are broadcast on a coaxial cabling using the carrier sense multiple access/collision detection (CSMA/CD) transmission method.

event. An action that takes place in the operation of the system software.

expect. Programmed dialogue with interactive programs.

F

Failover. Also called fallover, the sequence of events when a primary or server machine fails and a secondary or backup machine assumes the primary workload. This is a disruptive failure with a short recovery time.

fall back. Also called fall back, the sequence of events when a primary or server machine takes back control of its workload from a secondary or backup machine.

FDDI. Fiber Distributed Data Interface.

Fiber Distributed Data Interface (FDDI). An American National Standards Institute (ANSI) standard for 100-megabit-per-second LAN using optical fiber cables. An FDDI local area network (LAN) can be up to 100 km (62 miles) and can include up to 500 system units. There can be up to 2 km (1.24 miles) between system units and/or concentrators.

File Transfer Protocol (FTP). The Internet protocol (and program) used to transfer files between hosts. It is an application layer protocol in TCP/IP that uses TELNET and TCP protocols to transfer bulk-data files between machines or hosts.

file. * A set of related records treated as a unit, for example, in stock control, a file could consist of a set of invoices.

file server. A centrally located computer that acts as a storehouse of data and applications for numerous users of a local area network.

foreign host. Any host on the network other than the local host.

FTP. File transfer protocol.

G

gateway. An intelligent electronic device interconnecting dissimilar networks and providing protocol conversion for network compatibility. A gateway provides transparent access to dissimilar networks for nodes on either network. It operates at the session presentation and application layers.

H

HACMP/6000. AIX High Availability Cluster Multi-Processing/6000.

HACWS. High Availability Control Workstation function, based on HACMP/6000, provides for a backup control workstation for the SP system.

help key. In the SP graphical interface, the key that gives you access to the SP graphical interface help facility.

High Availability Cluster Multi-Processing/6000. An IBM facility to cluster nodes or components to provide high availability by eliminating single points of failure.

High Performance Switch. An IBM multi-stage packet switch for high-performance communication between processor nodes.

HiPPI. High Performance Parallel Interface. RS/6000 units can attach to a HiPPI network as defined by the ANSI specifications. The HiPPI channel supports burst rates of 100 Mbps over dual simplex cables; connections can be up to 25 km in length as defined by the standard and can be extended using third-party HiPPI switches and fiber optic extenders.

home directory. The directory associated with an individual user.

host. A computer connected to a network, and providing an access method to that network. A host provides end-user services.

HSD. The data striping device for the IBM Virtual Shared Disk. The device driver lets application programs stripe data across physical disks in multiple VSDs, thus reducing I/O bottlenecks and hot spots.

I

Internet. A specific inter-network consisting of large national backbone networks such as APARANET, MILNET, and NSFnet, and a myriad of regional and campus networks all over the world. The network uses the TCP/IP protocol suite.

Intermediate Switch Board. Switches mounted in the High Performance Switch expansion frame.

IP address. A 32-bit address assigned to devices or hosts in an IP internet that maps to a physical address. The IP address is composed of a network and host portion.

Internet Protocol (IP). (1) A protocol that routes data through a network or interconnected networks. IP acts as an interface between the higher logical layers and the physical network. This protocol, however, does not provide error recovery, flow control, or guarantee the reliability of the physical network. IP is a connectionless protocol. (2) A protocol used to route data from its source to it destination in an Internet environment.

ISB. Intermediate Switch Board.

K

Kerberos. A service for authenticating users in a network environment.

kernel. The core portion of the UNIX operating system which controls the resources of the CPU and allocates them to the users. The kernel is memory-resident, is said to run in “kernel mode” and is protected from user tampering by the hardware.

L

LAN. (1) Acronym for Local Area Network, a data network located on the user's premises in which serial transmission is used for direct data communication among data stations. (2) Physical network technology that transfers data a high speed over short distances. (3) A network in which a set of devices is connected to another for communication and that can be connected to a larger network.

local host. The computer to which a user's terminal is directly connected.

log database. A persistent storage location for the logged information.

log event. The recording of an event.

log event type. A particular kind of log event that has a hierarchy associated with it.

logging. The writing of information to persistent storage for subsequent analysis by humans or programs.

M

mask. To use a pattern of characters to control retention or elimination of portions of another pattern of characters.

menu. A display of a list of available functions for selection by the user.

Motif. The graphical user interface for OSF, incorporating the X Window System. Also called OSF/Motif.

MTBF. Mean time between failure. This is a measure of reliability.

MTTR. Mean time to repair. This is a measure of serviceability.

N

naive application. An application with no knowledge of a server that fails over to another server. Client to server retry methods are used to reconnect.

network. An interconnected group of nodes, lines, and terminals. A network provides the ability to transmit data to and receive data from other systems and users.

NFS. Network File System. NFS allows different systems (UNIX or non-UNIX), different architectures, or vendors connected to the same network, to access remote files in a LAN environment as though they were local files.

NIM. Network Installation Management is provided with AIX 4.1 to install AIX on the nodes.

NIM client. An AIX system installed and managed by a NIM master. NIM supports three types of clients:

- Standalone
- Diskless
- Dataless

NIM master. An AIX system that can install one or more NIM clients. An AIX system must be defined as a NIM master before defining any NIM clients on that system. A NIM master managers the configuration database containing the information for the NIM clients.

NIM object. A representation of information about the NIM environment. NIM stores this information as objects in the NIM database. The types of objects are:

- Network
- Machine
- Resource

NIS. Network Information System.

node. In a network, the point where one or more functional units interconnect transmission lines. A computer location defined in a network.

Node Switch Board. Switches mounted in frames that contain nodes.

NSB. Node Switch Board.

NTP. Network Time Protocol.

P

parallel environment. A system environment where message passing or SP resource manager services are used by they application.

Parallel Environment. A licensed IBM program used for message passing applications on the SP or RS/6000 platforms.

parallel processing. A multiprocessor architecture which allows processes to be allocated to tightly coupled multiple processors in a cooperative processing environment, allowing concurrent execution of tasks.

parameter. * (1) A variable that is given a constant value for a specified application and that may denote the application. * (2) An item in a menu for which the operator specifies a value or for which the system provides a value when the menu is interpreted. * (3) A name in a procedure that is used to refer to an argument that is passed to the procedure. * (4) A particular piece of information that a system or application program needs to process a request.

partition. See system partition.

Perl. Practical Extraction and Report Language.

pipe. A UNIX utility allowing the output of one command to be the input of another. Represented by the | symbol. It is also referred to as filtering output.

port. (1) An end point for communication between devices, generally referring to physical connection. (2) A 16-bit number identifying a particular TCP or UDP resource within a given TCP/IP node.

process. * (1) A unique, finite course of events defined by its purpose or by its effect, achieved under defined conditions. * (2) Any operation or combination of operations on data. * (3) A function being performed or waiting to be performed. * (4) A program in operation. For example, a daemon is a system process that is always running on the system.

protocol. A set of semantic and syntactic rules that defines the behavior of functional units in achieving communication.

PMR. Problem Management Report.

Problem Management Report. The number in the IBM support mechanism that represents a service incident with a customer.

Primary node or machine. (1) A device that runs a workload and has a standby device ready to assume the primary workload if that primary node fails or is taken out of service. (2) A node on the High Performance Switch that initializes, provides diagnosis and recovery services, and performs other operations to the switch network. (3) In IBM Virtual Shared Disk function, the node at which the logical volume is actually local and that acts as server node to I/O requests from other nodes.

R

RAID. Redundant array of independent disks.

remote host. *See foreign host*.

RISC. Reduced Instruction Set Computing (RISC), the technology for today's high performance personal computers and workstations, was invented in 1975. Uses a small simplified set of frequently used instructions for rapid execution.

rlogin (remote LOGIN). A service offered by Berkeley UNIX systems that allows authorized users of one machine to connect to other UNIX systems across a network and interact as if their terminals were connected directly. The rlogin software passes information about the user's environment (for example, terminal type) to the remote machine.

RPC. Acronym for Remote Procedure Call, a facility that a client uses to have a server execute a procedure call. This facility is composed of a library of procedures plus an XDR.

RSH. A variant of RLOGIN command that invokes a command interpreter on a remote UNIX machine and passes the command line arguments to the command interpreter, skipping the LOGIN step completely. See also *rlogin*.

S

SCSI. Small Computer System Interface.

server. (1) A function that provides services for users. A machine may run client and server processes at the same time. (2) A machine that provides resources to the network. It provides a network service, such as disk storage and file transfer, or a program that uses such a service. (3) A device, program, or code module on a network dedicated to providing a specific service to a network. (4) On a LAN, a data station that provides facilities to other data stations. Examples are file server, print server, and mail server.

Small Computer System Interface (SCSI). An input and output bus that provides a standard interface for the attachment of various direct access storage devices (DASD) and tape drives to the RS/6000.

shell. The shell is the primary user interface for the UNIX operating system. It serves as command language interpreter, programming language, and allows foreground and background processing. There are three different implementations of the shell concept: Bourne, C and Korn.

Small Computer Systems Interface Adapter (SCSI Adapter). An adapter that supports the attachment of various direct-access storage devices (DASD) and tape drives to the RS/6000.

SMIT. The System Management Interface Toolkit is a set of menu driven utilities for AIX that provides functions such as transaction login, shell script creation, automatic updates of object database, and so forth.

SNMP. Simple Network Management Protocol. (1) An IP network management protocol that is used to monitor attached networks and routers. (2) A TCP/IP-based protocol for exchanging network management information and outlining the structure for communications among network devices.

socket. (1) An abstraction used by Berkeley UNIX that allows an application to access TCP/IP protocol functions. (2) An IP address and port number pairing. (3) In TCP/IP, the Internet address of the host computer on which the application runs, and the port number it uses. A TCP/IP application is identified by its socket.

SP Switch. Newest version of the IBM High Performance Switch.

standby node or machine. A device that waits for a failure of a primary node in order to assume the identity of the primary node. The standby machine then runs the primary's workload until the primary is back in service.

subnet. Shortened form of subnetwork.

subnet mask. A bit template that identifies to the TCP/IP protocol code the bits of the host address that are to be used for routing for specific subnetworks.

subnetwork. Any group of nodes that have a set of common characteristics, such as the same network ID.

SUP. Software Update Protocol.

Sysctl. Secure System Command Execution Tool. An authenticated client/server system for running commands remotely and in parallel.

System Administrator. The user who is responsible for setting up, modifying, and maintaining the SP system.

subsystem. A software component that is not usually associated with a user command. It is usually a daemon process. A subsystem will perform work or provide services on behalf of a user request or operating system request.

syslog. A BSD logging system used to collect and manage other subsystem's logging data.

system partition. A group of nodes that act as a logical SP system. All nodes attached to the same switch chip must be in the same system partition.

T

tar. Tape ARchive, is a standard UNIX data archive utility for storing data on tape media.

Tcl. Tool Command Language.

TclX. Tool Command Language Extended.

TCP. Acronym for Transmission Control Protocol, a stream communication protocol that includes error recovery and flow control.

TCP/IP. Acronym for Transmission Control Protocol/Internet Protocol, a suite of protocols designed to allow communication between networks regardless of the technologies implemented in each network. TCP provides a reliable host-to-host protocol between hosts in packet-switched communications networks and in interconnected systems of such networks. It assumes that the underlying protocol is the Internet Protocol.

Telnet. Terminal Emulation Protocol, a TCP/IP application protocol that allows interactive access to foreign hosts.

Tk. Tcl-based Tool Kit for X Windows.

TMPCP. Tape Management Program Control Point.

token-ring. (1) Network technology that controls media access by passing a token (special packet or frame) between media-attached machines. (2) A network with a ring topology that passes tokens from one attaching device (node) to another. (3) The IBM Token-Ring LAN connection allows the RS/6000 system unit to participate in a LAN adhering to the IEEE 802.5 Token-Passing Ring standard or the ECMA standard 89 for Token-Ring, baseband LANs.

transaction. An exchange between the user and the system. Each activity the system performs for the user is considered a transaction.

transceiver (transmitter-receiver). A physical device that connects a host interface to a local area network, such as Ethernet. Ethernet transceivers contain electronics that apply signals to the cable and sense collisions.

transfer. To send data from one place and to receive the data at another place. Synonymous with move.

transmission. * The sending of data from one place for reception elsewhere.

TURBOWAYS 100 ATM Adapter. An IBM high-performance, high-function intelligent adapter that provides dedicated 100 Mbps ATM (asynchronous transfer mode) connection for high-performance servers and workstations.

U

UDP. User Datagram Protocol.

Uninteruptable Power Supply (UPS). A UPS can supply electricity to a device to keep it running when main power is interrupted or is unreliable.

User Datagram Protocol (UDP). (1) In TCP/IP, a packet-level protocol built directly on the Internet Protocol layer. UDP is used for application-to-application programs between TCP/IP host systems. (2) A transport protocol in the Internet suite of protocols that provides unreliable, connectionless datagram service. (3) The Internet Protocol that enables an application programmer on one machine or process to send a datagram to an application program on another machine or process.

UNIX operating system. An operating system developed by Bell Laboratories that features multiprogramming in a multiuser environment. The UNIX operating system was originally developed for use on minicomputers, but has been adapted for mainframes and microcomputers. **Note:** The AIX operating system is IBM's implementation of the UNIX operating system.

user. Anyone who requires the services of a computing system.

user ID. A nonnegative integer, contained in an object of type *uid_t*, that is used to uniquely identify a system user.

V

Virtual Shared Disk. The function that allows application programs executing at different nodes of a system partition to access a raw logical volume as if it were local at each of the nodes. In actuality, the logical volume is local at only one of the nodes, the server node.

W

workstation. * (1) A configuration of input/output equipment at which an operator works. * (2) A terminal or microcomputer, usually one that is connected to a mainframe or to a network, at which a user can perform applications.

X

X Window System.. A graphical user interface product.

Index

A

ABC Corporation, used in examples 11
accounting choices 64
acct_master 64
adapters 43
adapters supported 232
adapters, network connectivity 8
AFS
  authentication servers, choosing 128
AIX 8
AIX 4.2, new function 22
AIX level selection 21
application planning worksheet 224
applications, preliminary list 17
authentication
  administrative principals 121
  AFS servers, choosing 128
  choosing a configuration 121
  configurations 121
  creating configuration files 126
  deciding on realms 125
  planning checklists 127
  principals of 119
  selecting options to install 127
  servers 71
  setting up configurations 121
  SP authentication services 119
  worksheet 245
automount daemon 60
availability requirements 31

B

backup control workstation 94
boot/install server 65, 152
boot/install server for AIX 3.2.5 109

C

choosing a switch
  SP Switch, benefits 16
Client Input Output/Sockets (CLIO/S) 144
commands
  dsh 131
configuration planning 57
connectivity adapters, network 8
connectivity, network 26
control workstation 8
  configuration decisions 94
  description 7
  disk mirroring 94
  failure scenario 93
control workstation *(continued)*
  function with High Availability Control Workstation 93
  hardware requirements 50
  maintenance with High Availability Control Workstation 93
  minimum hardware requirements 52
  planning for 89
  planning for a backup 94
  planning for High Availability Control Workstation 93
  planning site environment 57
  reliability 94
  requirements 49
  single point of failure 91
  worksheet 241
control workstation network workstation 241
control workstation system images worksheet 241
control workstation worksheet 242

D

data access across system partitions 102, 108
decisions to make 11
default (persistent) system partitions 101
defining the system 11
directory structure, system partitions 116
disk mirroring 94
disk space
  installation image requirements 72
  lppsource 72
  system programs 28
  users' home directories 28
disk storage 28

E

EMEA Service Planning 135
environment variable
  SP_NAME 109
error messages, finding and using 133
estimate the installation image requirements 72
ethernet 75
expansion frames 6, 81, 83, 152, 153
external disk storage needs worksheet 225
external disk storage worksheet 30

F

fault tolerance definition 89
filecoll-config 63
finding and using error messages 133

© Copyright IBM Corp. 1997

frame
  expansion frames 6, 83
  frame description 5
  frame numbers 82
frame supervisor changes 95
future expansion, network install server 69

H

HACWS 31
hard disk choices for nodes 71
hardware configuration by node worksheet 227
hardware overview 4
hardware requirements
  control workstation 50, 52
help
  getting from IBM 133
High Availability Control Workstation
  control workstation maintenance 93
  description 31
  failure scenario with High Availability Control Workstation 93
  minimum requirements 53
  new function 31
  no loss of control workstation function 93
  ordering 90
  planning 93
  resource manager limitation 95
  system stability 93
  time services considerations 59
  worksheet 94
High Availability Control Workstation changes to the control workstation
  frame supervisor changes 95
high availability definition 89
high node 5
high performance switch 7, 16, 17, 76
  worksheet 229
home directory server planning 71
homedir_path 63
homedir_server 63
host name 39

I

IBM C for AIX, V3, requirement 17
IBM LoadLeveler 18
IBM parallel system support programs for AIX (PSSP) 8
IBM Program Products worksheet 225
IBM Recoverable Virtual Shared Disk 20, 137
IBM Virtual Shared Disk 137
IBM, getting help from 133
installation image requirements 72
installation worksheets
  network install image choices 57
installation worksheets *(continued)*
  time service choices 58
installation, planning for 57
installp image requirements 73
IP address assignments to nodes 80
IP addresses 75, 76, 109
IP over the high performance switch 76

K

kernel-to-kernel interface 137

L

large scale configurations, network install server 69
listing your applications 17
LoadLeveler 141
location of customer data 70
lppsource
  disk space requirements 72

M

management of system partitions 108
manual pages for public code xvi
messages, finding and using 133
Micro Channel adapters, not supported 22
migration
  planning 159
minimum requirements, High Availability Control Workstation 53
Motif 89
multiple frame systems, network install server 67
multiple production environments 102

N

NetTape 144
network connectivity 26
network connectivity adapters 8
network install image choices 58
network install image choices, worksheet 57
network install server planning
  future expansion 69
  large scale configurations 69
  multiple frame systems 67
  single frame systems 65
network planning 75
network time protocol (NTP) 59
networking considerations for partitioning 109
new function
  High Availability Control Workstation 31
  system partitions 32
node
  determining how many nodes needed 32
  high nodes 35
  node configuration worksheet 40

node *(continued)*
node hard disk choices 71
node layout worksheet instructions 36
node numbering 80, 84
node slot 111
thin nodes 35
wide nodes 35
node layout worksheet for one frame 225
node layout worksheet for two frames 226
nodes, processor 4
nodes, thin 5
nodes, wide 5
non-disruptive management 102
numbering nodes 80
numbering switch nodes 80

O

ordering the High Availability Control Workstation 90
other installp image requirements 73
overall system view of a High Availability Control Workstation 89
overview
hardware 4
software 8

P

parallel computing 15
Parallel Engineering and Scientific Subroutine Library 19
Parallel Environment for AIX 18, 140
Parallel I/O File System 144
Parallel I/O File System for AIX 19
parallel libraries 19
Parallel Optimization Subroutine Library 19
Parallel System Support Programs for AIX (PSSP), IBM 8
partitions
benefits 102
change management 102
data access 108
default system partition 101
description 101
multiple production environments 102
networking considerations 109
single point of control 108
switchless systems 106
System Partitioning Aid 107
understanding the switch board 104
passwd_file 63
Performance Monitor (PTPE) 141
planning
for High Availability Control Workstation 93
for installation and configuration 57
migration 159
planning *(continued)*
network 75
partitions 108
questions to ask 11
server 64
site environment 57
planning for security 119
power independence 94
preloaded SP or default version 11
print management choices 61
problem management record (PMR) 134
problem resolution
EMEA Service Planning 135
Service Director/6000 134
processor nodes 4
programs, related IBM 17
PSSP 8
PSSP 1.2 and 2.1 components list worksheet 239
PSSP 2.3, new function 22
PSSP print subsystem 61
PVMe 144

Q

Question
1. Do you want a preloaded SP or the default version? 11
1. what are you going to use your SP for? 15
2. what related IBM program products do you need? 17
3. what levels of AIX do you need? 21
4. what type of network connectivity do you need? 26
5. what are your disk storage requirements? 28
6. what are your reliability and availability requirements? 31
7. how many nodes do you need? 32
8. defining your system images 45
9. what do you need for your control workstation? 49
questions for planning decisions 11

R

reference rate of customer data 70
related program products 17
related programs 20
IBM LoadLeveler 18
IBM Recoverable Virtual Shared Disk 20
Parallel Engineering and Scientific Subroutine Library 19
Parallel Environment for AIX 18
Parallel I/O File System for AIX 19
parallel libraries 19
Parallel Optimization Subroutine Library 19

reliability requirements 31
requirements
availability 31
control workstation requirements 49
IBM C for AIX, V3 17
reliability 31
resource manager
High Availability Control Workstation limitation 95

S

SDR and system partitions 109
security
planning 119
sending problem data to IBM 133
server planning 64
server planning, home directory 71
servers, authentication 71
Service Director/6000 134
single frame systems, network install server 65
single point of control with system partitions 108
single point of failure 91
site environment choices 58, 59, 60, 61, 63, 64
site environment planning 57
site environment worksheet 242
slot numbers 80
SMIT 57
SMP (high) node 33
software migration 159
software overview 8
SP specific logs
table 132
SP Switch 16
SP system planning worksheet 225
SP_NAME environment variable 109
spacct_actnode_thresh 64
spacct_enable 64
spacct_exclusive_enable 64
spchuser command 62
home attribute 62
spmkuser command 62
home attribute 62
spsitenv 57
supfiesrv_port 63
supman_uid 63
switch node numbering 80, 84
switch numbers 82
switch port numbering 84
switch, high performance 7, 17
switch, SP 16
switches
high performance switch 16
SP Switch 16
switchless systems
system partitions partition 106
system definition 11
system file management choices 63
system images 45, 49
system partitions 32
benefits 102
boot/install server requirements 65
boot/install servers for AIX 3.2.5 109
change management 102
data access 102, 108
default (persistent) system partitions 101
directory structure 116
management of a system 108
multiple production environments 102
new function 32
overview 101
switchless systems 106
the SDR 109
system stability, High Availability Control Workstation 93

T

thin node 33
thin nodes 5
time service choices 58, 59
time services considerations and High Availability Control Workstation 59
trademarks vii
tuning considerations 65

U

understanding accounting 64
understanding node hard disk choices 71
understanding user account management choices 62
unterruptable power supply 94
user account management choices 62, 63
user directory mounting choices 60
usermgmt-config 63
uses for an SP 15
uses for system partitions 102

V

VSD
kernel-to-kernel interface 137

W

wide node 5, 33
worksheet
completing for High Availability Control Workstation 94
external disk storage 30
worksheet entries
Automount choices 59
Automount choices, worksheet 59

worksheets
adapters supported 232
application planning 224
authentication 245
authentication planning 129
control workstation network 241
control workstation system images 241
copying 11
external disk storage needs 225
hardware configuration by node 227
High Performance Switch Configuration 229
IBM Program Products 225
node layout for one frame 225
node layout for two frames 226
node layout instructions 36
PSSP 1.2 and 2.1 components list 239
site environment 242
SP Control Workstation Worksheet 242
SP Node Configuration Worksheet 40
SP system planning 225
workstation, control 8

X

X-Windows 89

Communicating Your Comments to IBM

IBM RS/6000 SP
Planning Volume 2, Control Workstation and
Software Environment

Publication No. GA22-7281-01

If you especially like or dislike anything about this book, please use one of the methods listed below to send your comments to IBM. Whichever method you choose, make sure you send your name, address, and telephone number if you would like a reply.

Feel free to comment on specific errors or omissions, accuracy, organization, subject matter, or completeness of this book. However, the comments you send should pertain to only the information in this manual and the way in which the information is presented. To request additional publications, or to ask questions or make comments about the functions of IBM products or systems, you should talk to your IBM representative or to your IBM authorized remarketer.

When you send comments to IBM, you grant IBM a nonexclusive right to use or distribute your comments in any way it believes appropriate without incurring any obligation to you.

If you are mailing an RCF from a country other than the United States, you can give the RCF to the local IBM branch office or IBM representative for postage-paid mailing.

- If you prefer to send comments by mail, use the RCF at the back of this book.
- If you prefer to send comments by FAX, use this number:
  - FAX: (International Access Code)+1+914+432-9405
- If you prefer to send comments electronically, use this network ID:
  - IBMLink: (United States customers only): KGNVMC(MHVRCFS)
  - IBM Mail Exchange: USIB6TC9 at IBMMAIL
  - Internet e-mail: mhvrcfs@vnet.ibm.com
  - World Wide Web: http://www.s390.ibm.com/os390

Make sure to include the following in your note:

- Title and publication number of this book
- Page number or topic to which your comment applies

Optionally, if you include your telephone number, we will be able to respond to your comments by phone.

Reader's Comments — We'd Like to Hear from You

IBM RS/6000 SP
Planning Volume 2, Control Workstation and
Software Environment

Publication No. GA22-7281-01

You may use this form to communicate your comments about this publication, its organization, or subject matter, with the understanding that IBM may use or distribute whatever information you supply in any way it believes appropriate without incurring any obligation to you. Your comments will be sent to the author's department for whatever review and action, if any, are deemed appropriate.

Note: Copies of IBM publications are not stocked at the location to which this form is addressed. Please direct any requests for copies of publications, or for assistance in using your IBM system, to your IBM representative or to the IBM branch office serving your locality.

Today's date: _____

What is your occupation?

Newsletter number of latest Technical Newsletter (if any) concerning this publication:

How did you use this publication?

[ ]	As an introduction	[ ]	As a text (student)
[ ]	As a reference manual	[ ]	As a text (instructor)
[ ]	For another purpose (explain)		

Is there anything you especially like or dislike about the organization, presentation, or writing in this manual? Helpful comments include general usefulness of the book; possible additions, deletions, and clarifications; specific errors and omissions.

Page Number: Comment:

Name

Address

Company or Organization

Phone No.

Reader's Comments — We'd Like to Hear from You
GA22-7281-01

Cut or Fold
Along Line

Fold and Tape | **Please do not staple** | Fold and Tape

NO POSTAGE
NECESSARY
IF MAILED IN THE
UNITED STATES

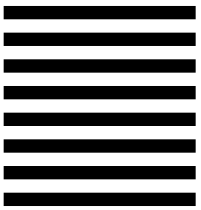

BUSINESS REPLY MAIL

FIRST-CLASS MAIL PERMIT NO. 40 ARMONK, NEW YORK

POSTAGE WILL BE PAID BY ADDRESSEE

IBM Corporation
Department 55JA, Mail Station P384
522 South Road
Poughkeepsie NY 12601-5400

Fold and Tape | **Please do not staple** | Fold and Tape

Cut or Fold
Along Line

Part Number: 17H5086
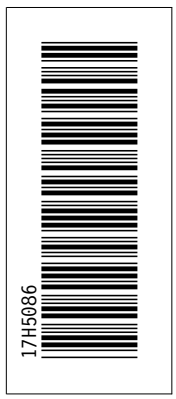
Printed in the United States of America
on recycled paper containing 10%
recovered post-consumer fiber.